HYOSUNG

Karion

SERVICE MANUAL

99000-94610

HYOSUNG

Karion

SERVICE MANUAL

HYOSUNG MOTORS & MACHINERY INC.

FOREWORD

This manual contains an introductory description on HYOSUNG 『 Karion 』 and procedures for its inspection/service and overhaul of its main components. Other information considered as generally known is not included.
Read GENERAL INFORMATION section to familiarize yourself with outline of the vehicle and MAINTENANCE and other sections to use as a guide for proper inspection and service.
This manual will help you know the vehicle better so that you can assure your customers of your optimum and quick service.

** This manual has been prepared on the basis of the latest specification at the time of publication. If modification has been made since then, difference may exist between the content of this manual and the actual vehicle.*
** Illustrations in this manual are used to show the basic principles of operation and work procedures. They may not represent the actual vehicle exactly in detail.*

⚠ WARNING

**** This manual is intended for those who have enough knowledge and skills for servicing HYOSUNG vehicles. Without such knowledge and skills, you should not attempt servicing by relying on this manual only.***
Instead, please contact your nearby authorized HYOSUNG motorcycle dealer.

GROUP INDEX

GENERAL INFORMATION	1
PERIODIC MAINTENANCE	2
ENGINE	3
FUEL SYSTEM	4
ELECTRICAL SYSTEM	5
CHASSIS	6
SERVICING INFORMATION	7

HYOSUNG MOTORS & MACHINERY INC.

© COPYRIGHT HYOSUNG MOTORS & MACHINERY INC. 2002

HOW TO USE THIS MANUAL

TO LOCATE WHAT YOU ARE LOOKING FOR:

1. The text of this manual is divided into sections.
2. As the title of these sections are listed on the previous page as GROUP INDEX, select the section where what you are looking for belong.
3. Holding the manual as shown at the right will allow you to find the first page of the section easily.
4. On the first page of each section, its contents are listed. Find the item and page you need.

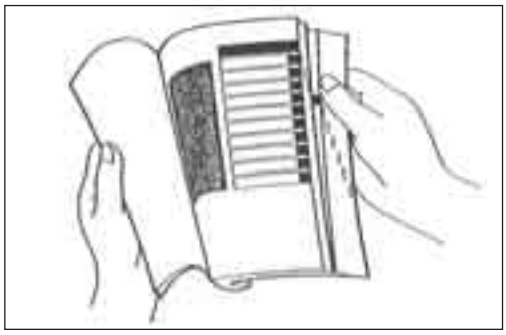

COMPONENT PARTS

Example: Rear wheel/Rear brake

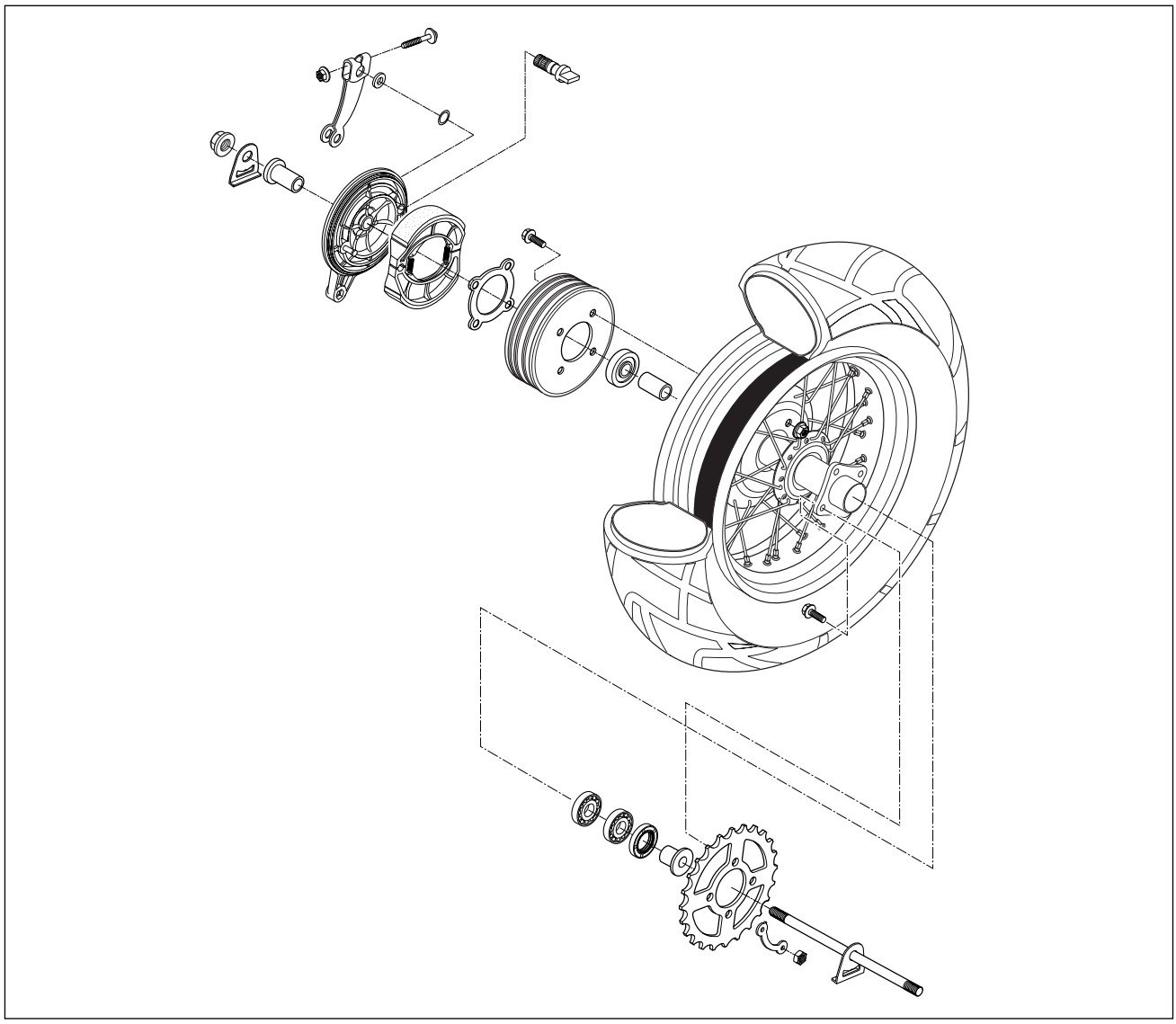

SYMBOL

Listed in the table below are the symbols indicating instructions and other information necessary for servicing and meaning associated with them respectively.

SYMBOL	DEFINITION	SYMBOL	DEFINITION
	Torque control required. Data beside it indicates specified torque.	1324	Apply THREAD LOCK “1324”.
OIL	Apply oil. Use engine oil unless otherwise specified.	BF	Apply or use brake fluid.
A	Apply SUPER GREASE “A”.	V	Measure in voltage range.
C	Apply SUPER GREASE “C”.	Ω	Measure in resistance range.
S	Apply SILICONE GREASE.	A	Measure in current range.
M	Apply MOLY PASTE.	TOOL	Use special tool.
1215	Apply BOND “1215”.		

GENERAL INFORMATION

CONTENTS

INFORMATION LABELS 1-1
GENERAL PRECAUTIONS 1-1
SERIAL NUMBER LOCATION 1-4
FUEL AND OIL RECOMMENDATIONS 1-5
BREAK-IN PROCEDURES 1-6
EXTERIOR ILLUSTRATION 1-7
SPECIFICATIONS 1-8

1-1 GENERAL INFORMATION

WARNING / CAUTION / NOTE

Please read this manual and follow its instructions carefully. To emphasize special information, the symbol and the words WARNING, CAUTION and NOTE have special meanings. Pay special attention to the messages highlighted by these signal words.

⚠ WARNING

Indicates a potential hazard that could result in death or injury.

⚠ CAUTION

Indicates a potential hazard that could result in vehicle damage.

NOTE

Indicates special information to make maintenance easier or instructions cleaner.

Please note, however, that the warning and cautions contained in this manual cannot possibly cover all potential hazards relating to the servicing, or lack of servicing, of the motorcycle. In addition to the WARNING and CAUTION stated, you must use good judgement and basic mechanical safety principles. If you are unsure about how to perform a particular service operation, ask a more experienced mechanic for advice.

GENERAL PRECAUTIONS

⚠ WARNING

- **Proper service and repair procedures are important for the safety of the service machanic and the safety and reliability of the vehicle.**
- **When 2 or more persons work together, pay attention to the safety of each other.**
- **When it is necessary to run the engine indoors, make sure that exhaust gas is forced outdoors.**
- **When working with toxic or flammable materials, make sure that the area you work in is wellventilated and that you follow all off the material manufacturer' s instructions.**
- **Never use gasoline as a cleaning solvent.**
- **To avoid getting burned, do not touch the engine, engine oil or exhaust system during or for a while after engine operation.**
- **After servicing fuel, oil, exhaust or brake systems, check all lines and fittings related to the system for leaks.**

⚠ CAUTION

- If parts replacement is necessary, replace the parts with HYOSUNG Genuine Parts or their equivalent.
- When removing parts that are to be reused, keep them arranged in an orderly manner so that they may be reinstalled in the proper order and orientation.
- Be sure to use special tools when instructed.
- Make sure that all parts used in reassembly are clean, and also lubricated when specified.
- When use of a certain type of lubricant, bond, or sealant is specified, be sure to use the specified type.
- When removing the battery, disconnect the negative cable first and then positive cable. When reconnecting the battery, connect the positive cable first and then negative cable, and replace the terminal cover on the positive terminal.
- When performing service to electrical parts, if the service procedures do not require use of battery power, disconnect the negative cable at the battery.
- Tighten cylinder head and case bolts and nuts, beginning with larger diameter and ending with smaller diameter, from inside to outside diagonally, to the specified tightening torque.
- Whenever you remove oil seals, gaskets, packing, O-rings, locking washers, cotter pins, circlips, and certain other parts as specified, be sure to replace them with new ones. Also, before installing these new parts, be sure to remove any left over material from the mating surfaces.
- Never reuse a circlip. When installing a new circlip, take care not to expand the end gap larger than required to slip the circlip over the shaft. After installing a circlip, always ensure that it is completely seated in its groove and securely fitted.
- Do not use self-locking nuts a few times over.
- Use a torque wrench to tighten fasteners to the torque values when specified. Wipe off grease or oil if a thread is smeared with them.
- After reassembly, check parts for tightness and operation.

⚠ CAUTION

- To protect environment, do not unlawfully dispose of used motor oil and other fluids: batteries, and tires.
- To protect Earth's natural resouces, properly dispose of used vehicles and parts.

HYOSUNG *Karion*

NOTE
Difference between photographs and actual motorcycles depends on the markets.

SERIAL NUMBER LOCATION

The frame serial number or V.I.N. (Vehicle Identification Number) is stamped on the steering head tube. The engine serial number is located on the left upside of crankcase assembly.
These numbers are required especially for registering the machine and ordering spare parts.

⊙ FRAME SERIAL NUMBER

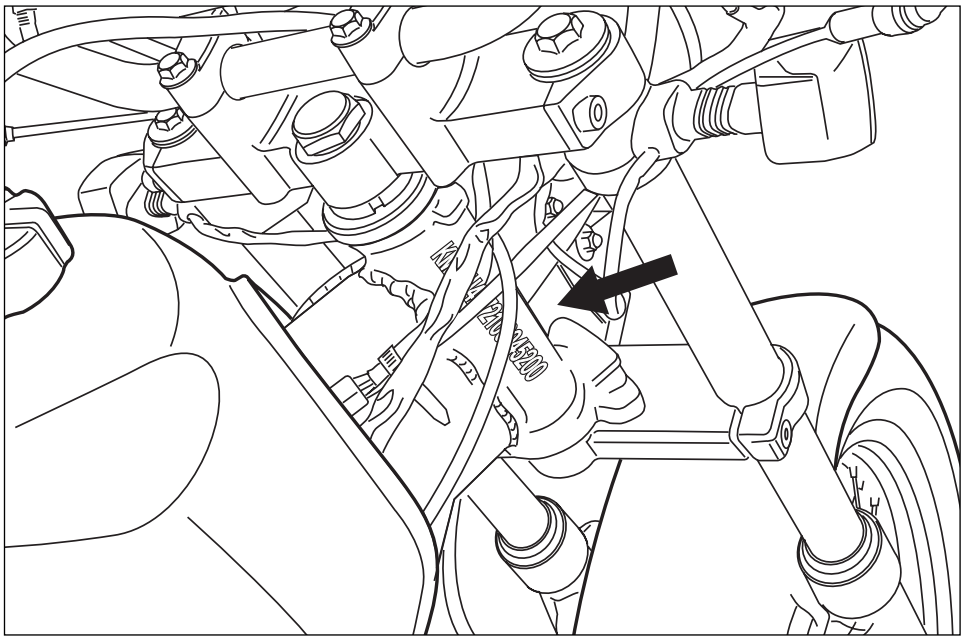

⊙ ENGINE SERIAL NUMBER

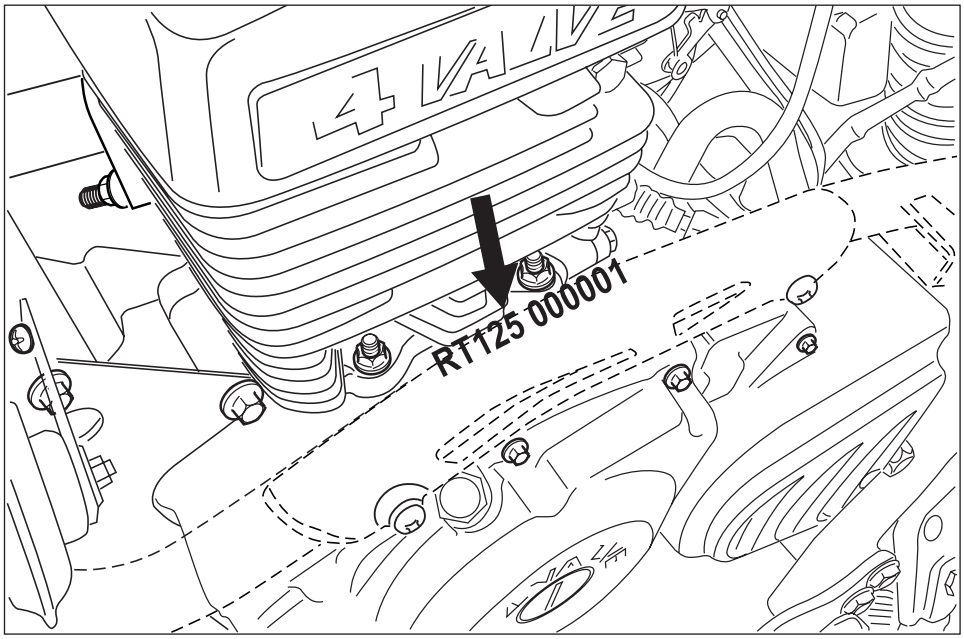

FUEL AND OIL RECOMMENDATION

⊙ FUEL

Gasoline used should be graded 85～95 octane (Research Method) or higher. An unleaded gasoline type is recommended.

⊙ ENGINE OIL

■ ENGINE OIL SPECIFICATION

Classification system	Grade
API	Over SG
SAE	10W/30 or 10W/40

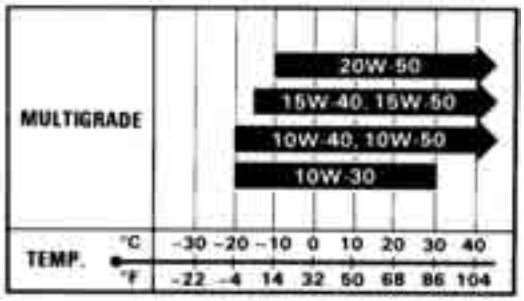

✳ **If an SAE 10W/30 or 10W/40 motor oil is not available, select an alternative according to the following chart.**

Use a premium quality 4-stroke motor oil to ensure longer service life of your motorcycle.

⚠ WARNING

- **Don t mix the unrecommended oil. It could damage the engine.**
- **When refilling the oil tank, don t allow the dust to get inside.**
- **Mop the oil spilt.**
- **Don t put the patch on the cap. It could disturb the oil to be provided and damage the engine.**

⊙ BRAKE FLUID

Specification and classification: DOT3 or DOT4

⚠ WARNING

Since the brake system of this motorcycle is filled with a glycol-based brake fluid by the manufacturer, do not use or mix different types of fluid such as silicone-based and petroleum-based fluid for refilling the system, otherwise serious damage will result.
Do not use any brake fluid taken from old or used or unsealed containers.
Never re-use brake fluid left over from a previous servicing, which has been stored for a long period.

⊙ FRONT FORK OIL

Use fork oil : TELLUS #22

BREAK-IN PROCEDURES

During manufacture only the best possible materials are used and all machined parts are finished to a very high standard but it is still necessary to allow the moving parts to "BREAK-IN" before subjecting the engine to maximum stresses. The future performance and reliability of the engine depends on the care and restraint exercised during its early life. The general rules are as follows:

- Keep to these break-in procedures:

Initial 800km	**Less than 1/2 throttle**
Up to 1,600km	**Less than 3/4 throttle**

- Upon reaching an odometer reading of 1,600 km you can subject the motorcycle to full throttle operation.
- Do not maintain constant engine speed for an extended period during any portion of the break-in. Try to vary the throttle position.

EXTERIOR ILLUSTRATION

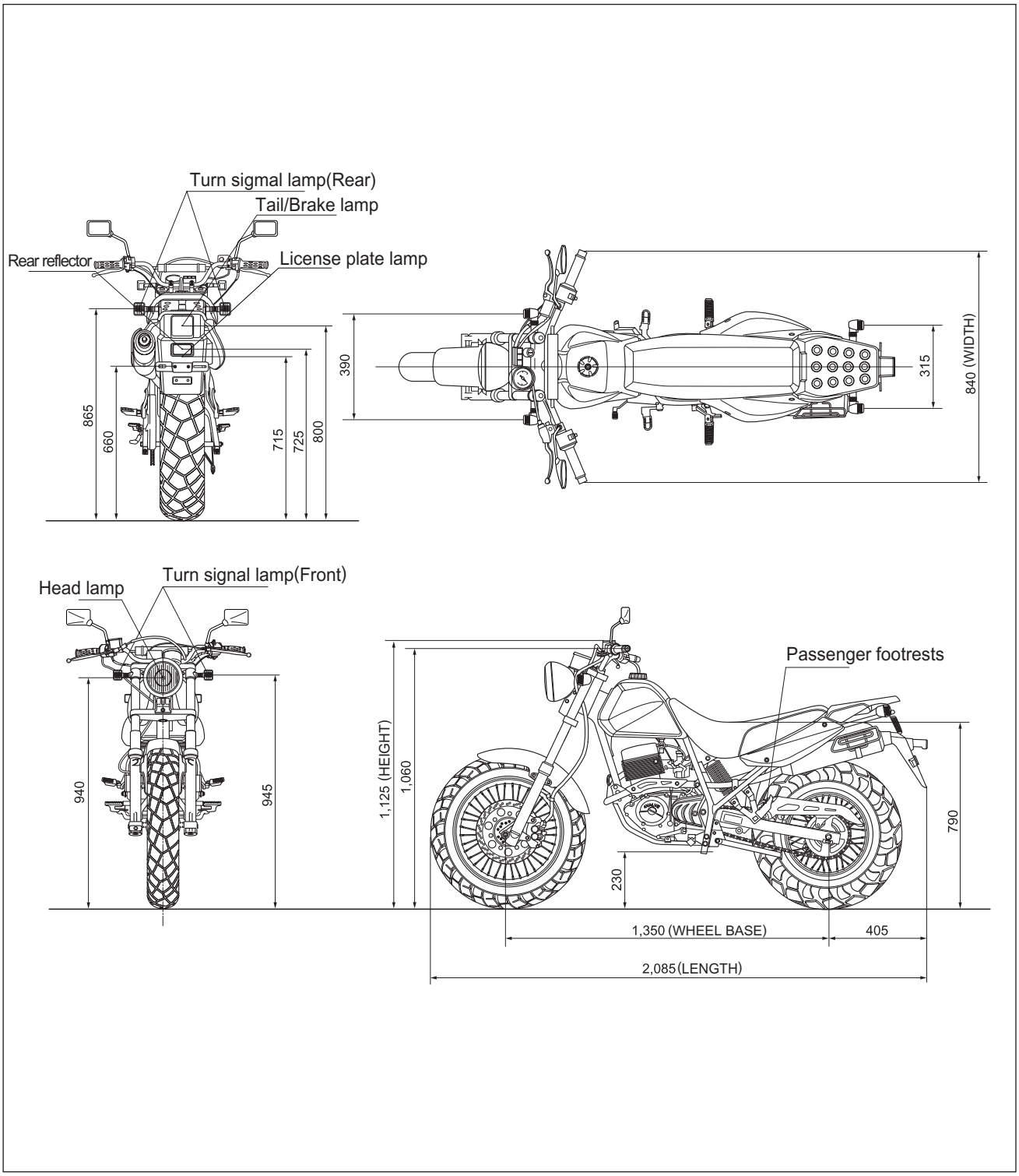

SPECIFICATIONS

DIMENSIONS AND DRY MASS

Overall length	2,085 mm (82.1 in)
Overall width	840 mm (33.1 in)
Overall height	1,125 mm (44.3 in)
Wheelbase	1,350 mm (53.2 in)
Ground clearance	230 mm (9.1 in)
Mass	135 kg (297.6 bs)

ENGINE

Type	Four-stroke, SOHC
Number of cylinder	1
Bore	57.0 mm (2.24 in)
Stroke	48.8 mm (1.92 in)
Piston displacement	124.5㎤ (7.6 in^3)
Carburetor	PISTON VALVE
Starter system	Kick / Electric starter
Lubrication system	Wet sump

TRANSMISSION

Clutch	Wet multi-plate type
Transmission	5-speed constant mesh
Gearshift pattern	1-down, 4-up
Final reduction	3.692
Gear ratio, 1st	2.750
2nd	1.786
3rd	1.386
4th	1.045
5th	0.943
Drive chain	428SO 130links

CHASSIS

Front suspension	Telescopic type
Rear suspension	Swingarm type
Steering angle	47 ˚ (right & left)
Caster	25 ˚
Trail	84 mm (3.3 in)
Front brake	Disk brake
Rear brake	Drum brake
Front tire size	130/80-18 66P
Rear tire size	180/80-14M/C 78P
Front fork stroke	160 mm (6.3 in)

ELECTRICAL

Ignition type	Battery Ignition (CDI)
Ignition timing	15 ˚ B.T.D.C.at 2,250 rpm and 31 ˚ B.T.D.C.at 4,000 rpm
Spark plug	C8EH-9
Battery	12V 6Ah
Fuse	15 A
Head lamp	HI : 35W LO : 35W
Turn signal lamp	10 W
Brake / Tail lamp	21 / 5 W
Speedometer lamp	3 W
High beam indicator lamp	1.7 W
Turn signal indicator lamp	1.7 W
License plate lamp	5 W
Neutral indicator lamp	1.7 W

CAPACITIES

Fuel tank	9.0 ℓ
Engine oil, oil change	950 mℓ
with filter change	1,050 mℓ
overhaul	1,400 mℓ
Front fork oil (One side)	215 cc + 2.5

NOTE

The specifications are subject to change without notice.

PERIODIC MAINTENANCE

2

CONTENTS

PERIODIC MAINTENANCE SCHEDULE · · · 2-1
MAINTENANCE PROCEDURES · · · 2-3
BATTERY · · · 2-3
CYLINDER HEAD NUTS, CYLINDER NUTS, EXHAUST PIPE NUTS AND MUFFLER MOUNTING BOLTS · · · 2-3
AIR CLEANER ELEMENT · · · 2-5
VALVE CLEARANCE · · · 2-6
SPARK PLUG · · · 2-7
FUEL LINE · · · 2-8
ENGINE OIL · · · 2-8
ENGINE OIL FILTER · · · 2-9
CARBURETOR · · · 2-10
CLUTCH · · · 2-11
DRIVE CHAIN · · · 2-12
BRAKES · · · 2-14
TIRES · · · 2-17
STEERING · · · 2-17
FRONT FORK · · · 2-17
REAR SUSPENSION · · · 2-18
CHASSIS BOLTS AND NUTS · · · 2-18
COMPRESSION PRESSURE · · · 2-19
OIL PRESSURE · · · 2-20

⚠ CAUTION

Using poor quality replacement parts can cause your motorcycle to wear more quickly and shorten its useful life.
Use only genuine Hyoung replacement parts or their equivalent.

PERIODIC MAINTENANCE SCHEDULE

The chart below lists the recommended intervals for all the required periodic service work necessary to keep the motorcycle operating at peak performance and economy.

⚠ CAUTION

More frequent servicing should be performed on motorcycles that are used under severe conditions.

⊙ PERIODIC MAINTENANCE CHART

■ ENGINE

Item \ Interval	Initial 1,000 km	Every 4,000 km	Every 8,000 km	page
Air cleaner element	Clean every 3,000 km · Replace every 12,000 km			2- 5
Exhaust pipe nuts and muffler mounting bolts	Tighten	Tighten	—	2- 4
Valve clearance adjust	Inspect	Inspect	—	2- 6
Cylinder head nut	Tighten	Tighten	—	2- 4
Cylinder head & cylinder	—	—	Remove carbon	3-13
Spark plug	Clean	Clean	Replace	2-7
Fuel hose	Inspect	Inspect	—	2-8
	Replace every 4 years			
Engine oil filter	Replace	Replace	—	2- 9
Engine oil	Replace	Replace	—	2- 8
Throttle cable	Inspect	Inspect	—	2-11
Idle speed	Inspect	Inspect	—	2-10
Clutch	Inspect	Inspect	—	2-11

■ CHASSIS

Item \ Interval	Initial 1,000 km	Every 4,000 km	Every 8,000 km	page
Drive chain	Clean and lubricate every 1,000km			2-12
Brake	Inspect	Inspect	—	2-14
Brake hose	Inspect	Inspect	—	2-14
	Replace every 4 years			
Brake fluid	Inspect	Inspect	—	2-14
	Replace every 2 years			
Tires	Inspect	Inspect	—	2-17
Steering	Inspect	Inspect	—	2-17
Front forks	—	Inspect	—	2-17
Rear suspension	—	Inspect	—	2-18
Chassis bolts and nuts	Tighten	Tighten	—	2-18

LUBRICATION POINT

Proper lubrication is important for smooth operation and long life of each working part of the motorcycle.
Major lubrication points are indicated below.

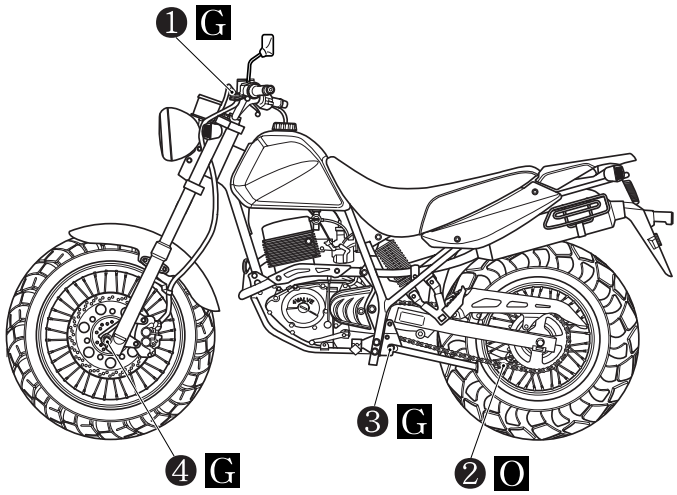

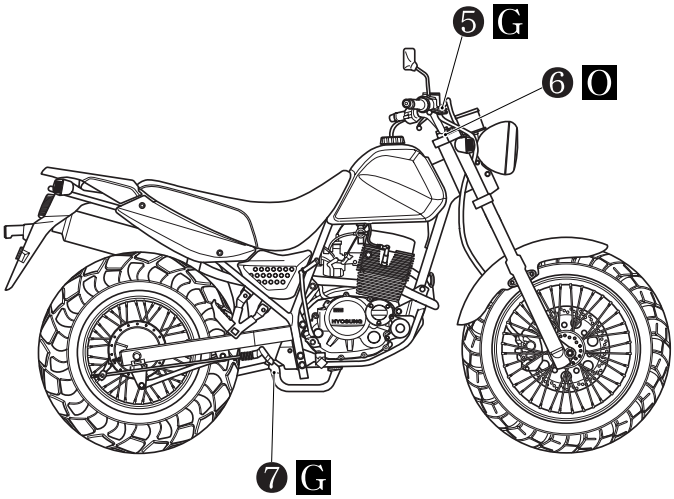

① Clutch lever holder
② Drive chain
③ Side stand pivot and spring hook
④ Speedometer gear box
⑤ Front brake lever holder
⑥ Throttle cable
⑦ Rear brake pedal pivot

O - Motor oil, G - Grease

NOTE

- **Before lubricating each part, clean off any rusty spots and wipe off any grease, oil, dirt or grime.**
- **Lubricate exposed parts which are subject to rust, with either motor oil or grease whenever the motorcycle has been operated under wet or rainy condition.**

MAINTENANCE PROCEDURE

This section describes the service procedures for each section of the periodic maintenance.

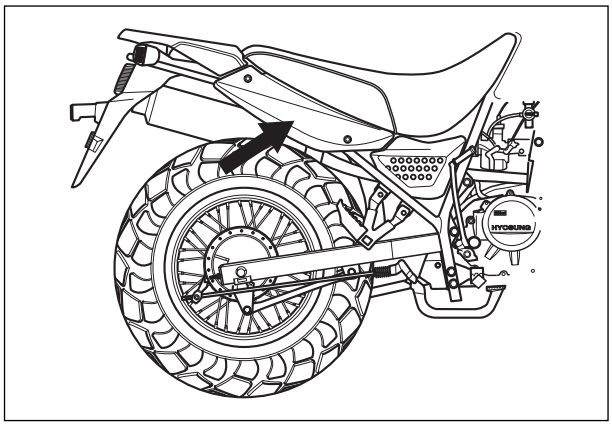

BATTERY

Inspect Interval

Inspect Initial 1,000 km and Every 4,000 km.

- Remove the right frame cover for measure of battery voltage.
- Using pocket tester, measure the battery voltage.
  If the tester reading is less than 12.8V, recharge battery by a battery charger.

Voltage	How to charge
Less than 11.5V	Charge 20Hour as 0.7A
Between 11.5~12.8V	Charge 5~10Hour as 0.7A
More than 12.8V	No charge

⚠ CAUTION

- **When recharging the battery remove the battery from motorcycle.**
  Otherwise, regulator/rectifier unit should be an obstacle.
- **When recharging the battery, do not remove the caps.**
- **When recharging the battery, above the charge electric current and time should be kept as 12V.**

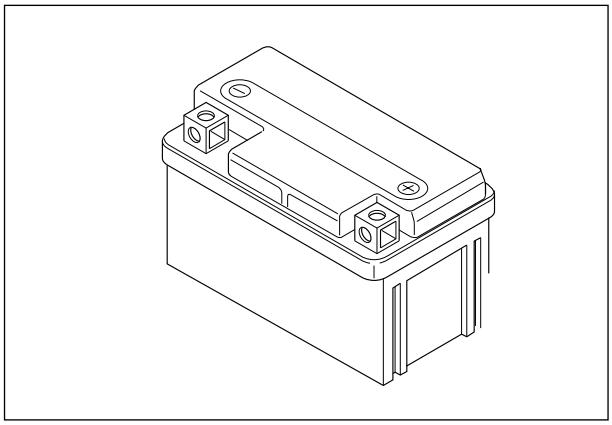

CYLINDER HEAD NUTS, CYLINDER NUTS, EXHAUST PIPE NUTS AND MUFFLER MOUNTING BOLTS

Inspect Interval

Tighten Initial 1,000 km and Every 4,000 km.

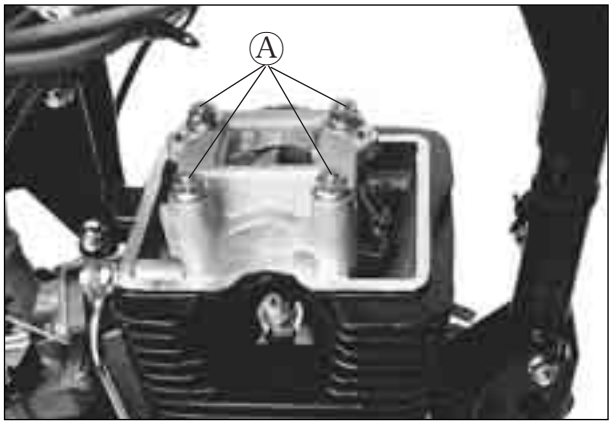

⊙CYLINDER HEAD NUTS AND CYLINDER NUTS

- Remove the seat and fuel tank.
  (Refer to page 3-1)
- Remove the cylinder head cover.
- Tighten the four 8 mm nuts Ⓐ and four 16 mm nuts Ⓑ to the specified torque with a torque wrench, when engine is cold.

Cylinder head nut (8mm) : 15~20 N · m (1.5~2.0 kg · m)

Cylinder nut (16mm) : 7~11 N · m (0.7~1.1 kg · m)

- When installing cylinder head cover, the rubber packing is reached the mating surface of cylin der head cover.

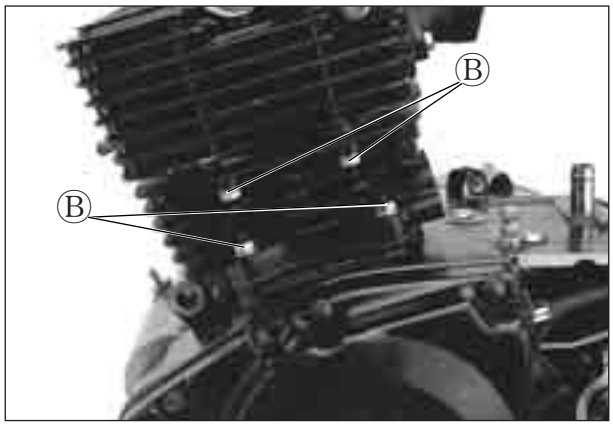

EXHAUST PIPE NUTS AND MUFFLER MOUNTING BOLTS

- Tighten the exhaust pipe nuts ①, muffler mounting bolts ② and exhaust pipe clamp bolt ③, to the specified torque.

Exhaust pipe nuts and Muffler mounting bolts : 9~12 N · m (0.9~1.2 kg · m)

Exhaust pipe clamp bolt : 9~12 N · m (0.9~1.2 kg · m)

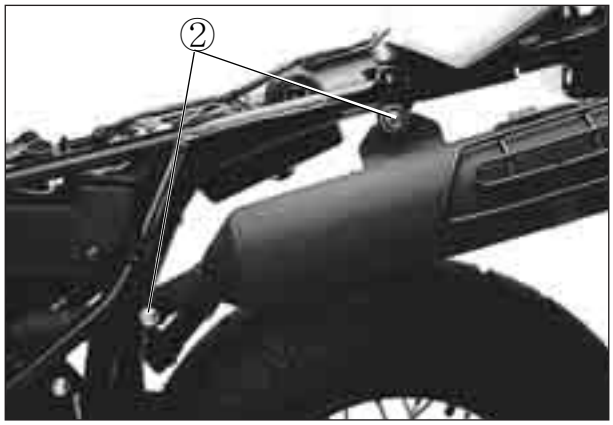

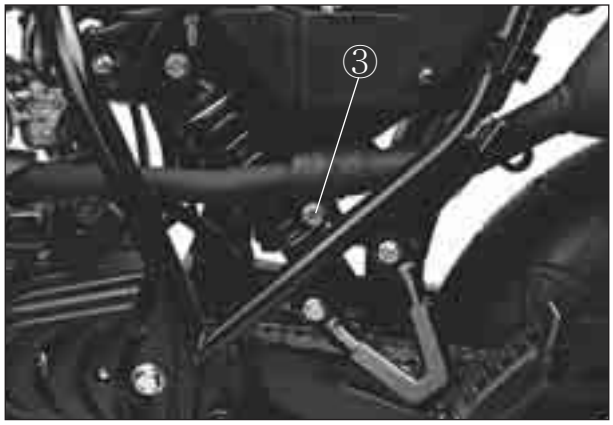

AIR CLEANER ELEMENT

Inspect Interval

Clean Every 3,000 km,
Replace Every 12,000 km.

If the air cleaner is clogged with dust, intake resistance will be increased resulting with decrease in power output and increasing fuel consumption.
Check and clean the element in the following manner.

- Remove the seat and right side cover.
- Remove the six screw and take out the cover.
- Separate the element from the element cover.
- Fill a washing pan of a proper size with non-flammable cleaning solvent . Immerse the elements in the cleaning solvent and wash them clean.
- Squeeze the cleaning solvent out of the washed element by pressing it under the palms of both hands : do not twist or wring the element or it will develop tears.
- Immerse the element in Hyosung genuine oil , and squeeze the oil out of the element leaving it slightly wet with oil.
- Fit the elements to the cleaner case properly.

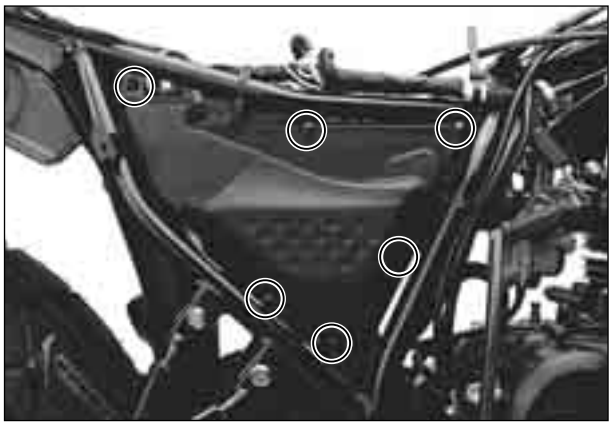

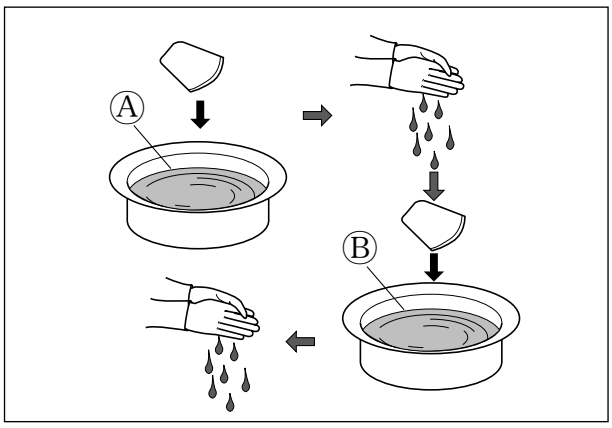

⚠ CAUTION

Before and during the cleaning operation, inspect the element for tears. A torn element must be replaced.
Be sure to position the element snugly and correctly, so that no incoming air will bypass it.
Remember, rapid wear of piston rings and cylinder bore is often caused by a defective or poorly fitted element.

⚠ CAUTION

More frequent servicing may be performed on motorcycles that are used under severe conditions, also clean the air cleaner element when replacing the oil to prevent damage of the engine.

VALVE CLEARANCE

Inspect Interval

Inspect Initial 1,000 km and Every 4,000 km.

Excessive valve clearance results in valve noise and insufficient valve clearance results in valve damage and reduced power. At the distances indicated above, check and adjust the clearance to the following specification.
The procedure for adjusting the valve clearance is as follows :

- Remove the seat and fuel tank.
- Remove spark plug, cylinder head cover ①, and valve timing inspection plug ②.
- Remove the magneto cover cap ③ and rotate the magneto rotor with the 14 mm box wrench to set the piston at (TDC) of the compression stroke.
  (Rotate the rotor until the "T" line on the rotor is aligned with the center of inspection plug hole.)
- Insert the thickness gauge to the valve stem end and the adjusting screw on the rocker arm.
  TOOL **Thickness gauge : 09900-20806**

Valve clearance of IN. and EX.	0.08~0.13 mm (0.0032 - 0.0051 in)

If clearance is off the specification, bring it into the specified range by using the special tool.

- Reinstall spark plug, cylinder head cover, valve timing inspection plug and magneto cover cap.
  TOOL **Tappet adjust driver : 09917-14910**

⚠ CAUTION

Valve clearance should be checked when the engine is cold.
Both the intake and exhaust valves must be checked and adjusted when the piston is at Top-Dead-Center (TDC) of the compression stroke.

⚠ CAUTION

If you don t rotate the crankshaft about 10 times before measuring the valve clearance, there is no meaning of valve clearance.

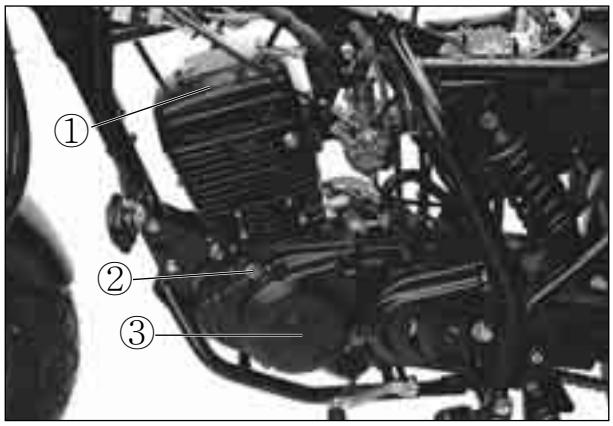

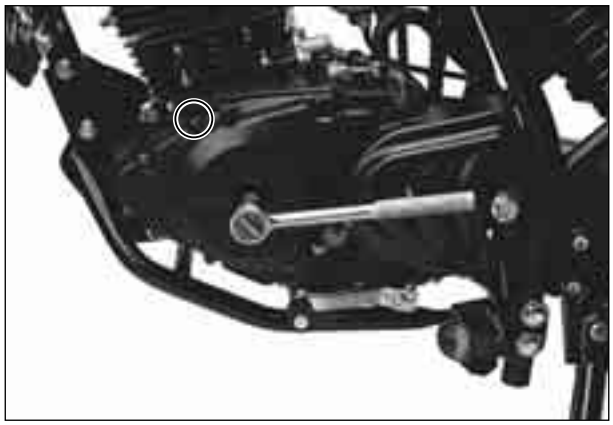

SPARK PLUG

Inspect Interval

Clean Initial 1,000 km and Every 4,000 km,
Replace Every 8,000 km.

- Disconnect the spark plug caps.
- Remove the spark plugs.

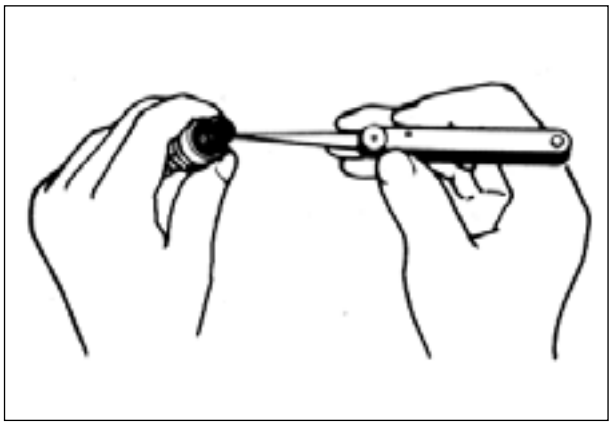

TYPE	SPARK PLUG SPECIFICATION
Hot type	C7EH-9
Standard type	C8EH-9
Cold type	C9EH-9

Remove the carbon deposite with wire or pin and adjust the spark plug gap to 0.8～0.9 mm, measuring with a thickness gauge.

Spark plug gap	0.8～0.9 mm (0.032 - 0.035 in)

TOOL Thickness gauge : 09900-20806

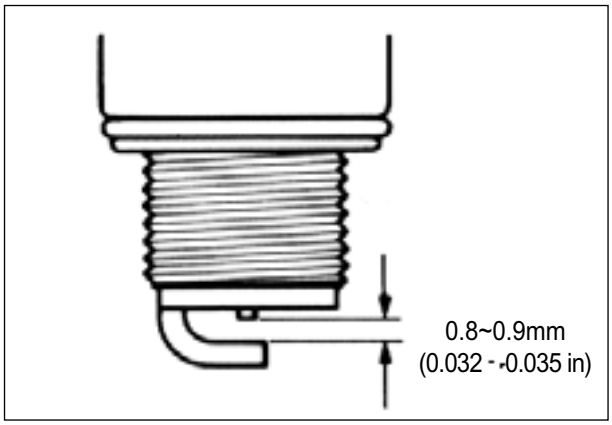

Check to see the worn or burnt condition of the electrodes.
If it is extremly worn or burnt, replace the plug.
And also replace the plug if it has a broken insulator, damaged thread, etc.

- Install the spark plug, and then tighten it to specified torque.

Spatk plug : 20~25 N · m (2.0~2.5 kg · m)

⚠ CAUTION

- **Do not over torque or cross thread the spark plug or the aluminum threads of the cylinder head will be damaged.**
  Do not allow contaminants to enter the engine through the spark plug holes when the plug is removed.
- **The standard spark plug for this motorcycle has been carefully selected to meet the vast majority of all operational ranges. The selection of an improper spark plug can lead to severe engine damage.**

FUEL LINE

Inspect Interval

Inspect lintial 1,000 km and Every 4,000 km,
Replace every four years.

Inspect the fuel line and connections for damage and fuel leakage.
If any defects are found, the fuel line must be replaced.

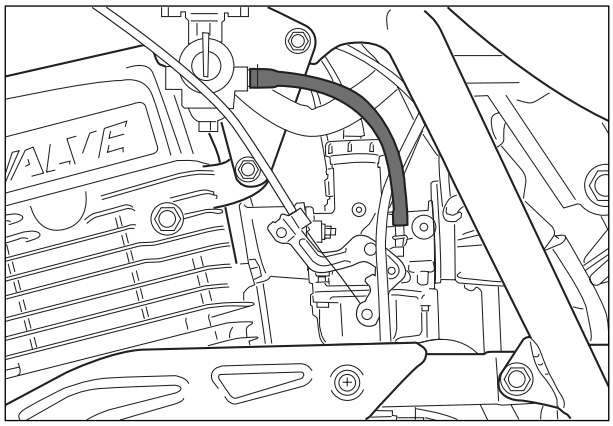

ENGINE OIL

Inspect Interval

Replace lintial 1,000 km and Every 4,000 km.

Necessary amount of engine oil	
Oil change	950 ㎖
Filter change	1,050 ㎖
Overhaul engine	1,400 ㎖
Engine oil type	SAE 10W/30 or 10W/40 API Over SG

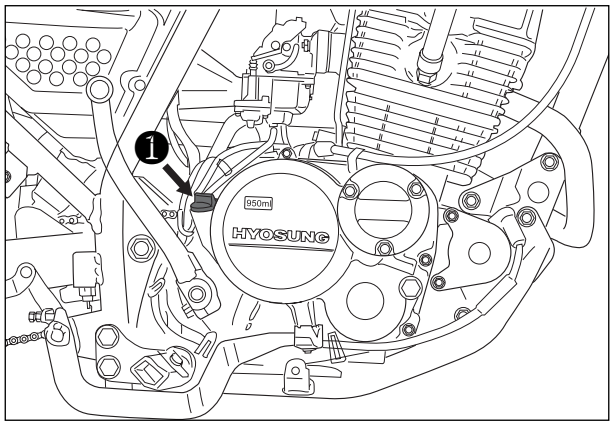

Oil should be changed while the engine is warm. Oil filter replacement at the above intervals, should be together with the engine oil change.

- Keep the motorcycle upright.
- Place an oil pan below the engine, and drain the oil by removing the filler cap ① and drain plug ②.
- Tighten the drain plug ② to the specified torque, and pour fresh oil through the oil filler. Use an API classification of Over SG oil with SAE 10W/30 or 10W/40 viscosity.

  Oil drain plug : 18~20 N · m (1.8~2.0 kg · m)

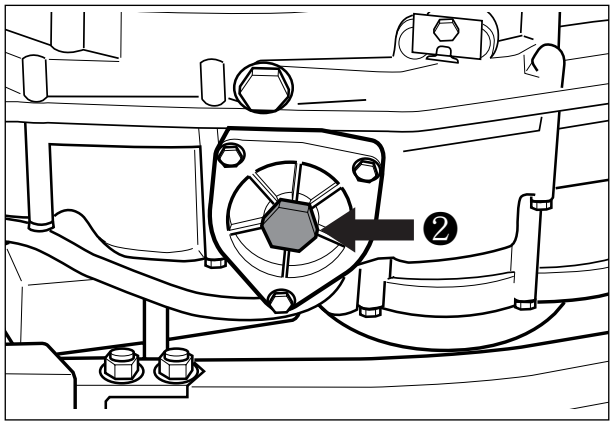

- Start up the engine and allow it to run for several minutes at idling speed.
- Turn off the engine and wait about three minutes, then check the oil with the oil level gauge. If the level is below mark "F", add oil to "F" level.
  If the level is above mark "F", drain oil to "F" level.

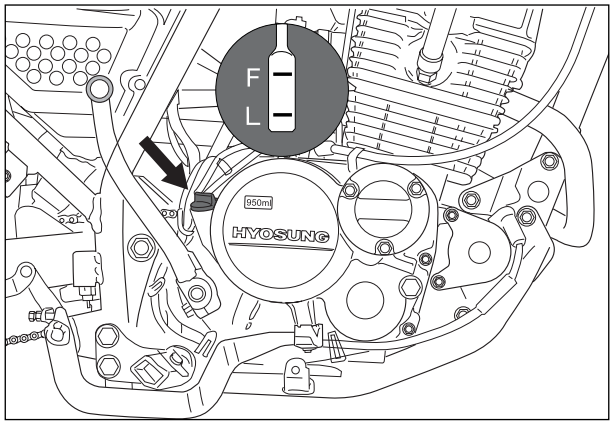

⚠ CAUTION

Never operate the motorcycle if the engine oil level is below the "Lower line mark(L)" in the engine oil level gauge. Never fill the engine oil above the "Upper line mark(F)". Engine oil level being most suitable about 1mm under the "Upper line mark(F)" of the engine oil level gauge. In case of the engine oil pouring excessively, the engine output being made insufficient.
Be careful not to pour the engine oil excessively.

⚠ CAUTION

Necessarily, confirm and clean the oil strainer ① when replace the Engine oil (specially, when first replacement).

⚠ CAUTION

More frequent servicing may be performed on mo-torcycles that are used under severe conditions.

ENGINE OIL FILTER

Inspect Interval

Replace lintial 1,000 km and Every 4,000 km.

- Drain the engine oil as described in the engine oil replacement procedure.
- Remove the oil filter cap ②.
- Remove the oil filter.
- Install the new O-ring ③.
- Install the new oil filter.
- Install the new O-ring ④ and spring ⑤ to the oil filter cap.
- Install the oil filter cap.

NOTE

Before installing the oil filter cap, apply engine oil lightly to the new O-ring ④.

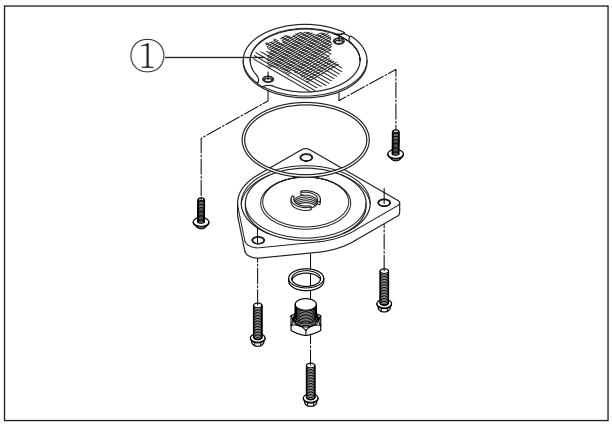

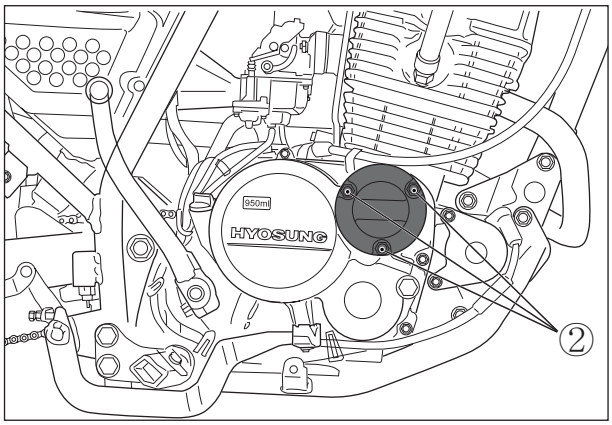

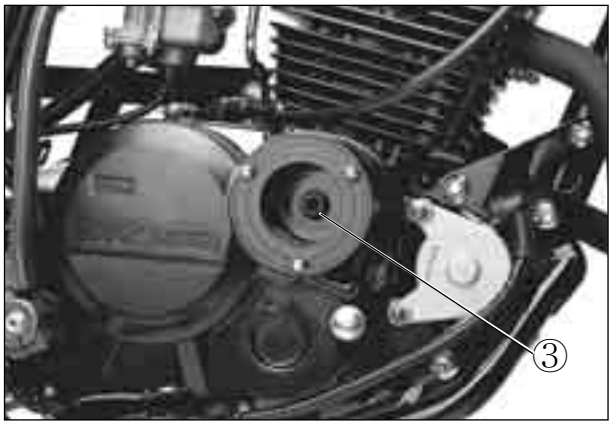

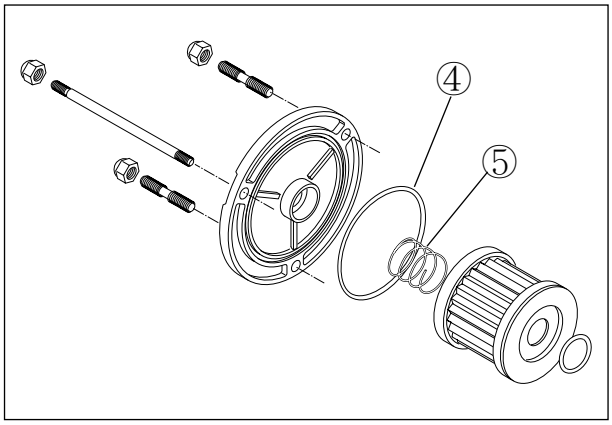

⊙ OIL FILTER INSTALLATION

⚠ CAUTION

When install the oil filter, necessarily, HYOSUNG character and 16510H05240 part's NO. install toward the outside, otherwise can damage the engine.

⚠ WARNING

Engine oil and exhaust pipes can be hot enough to burn you.
Wait until the oil drain plug and exhaust pipes are cool enough to touch with bare hands before draining oil.

● Add new engine oil and check the oil level as described in the engine oil replacement procedure.

⚠ CAUTION

Use HYOSUNG MOTORCYCLE GENUINE OIL FILTER only, since the other make's genuine filters and after-market parts may differ filtering performance and durability, which could cause engine damage or oil leaks. Hyosung motors genuine oil filter is also not usable for the motocycles.

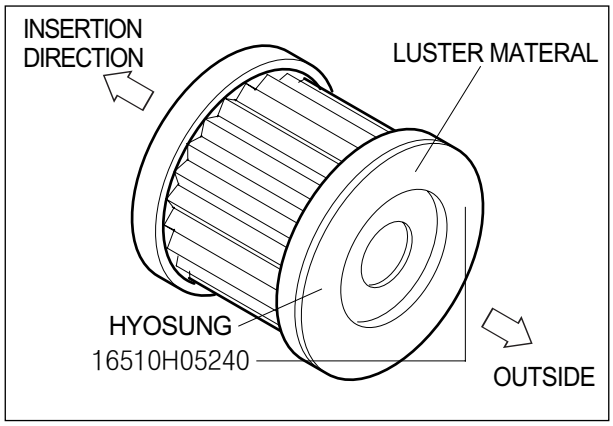

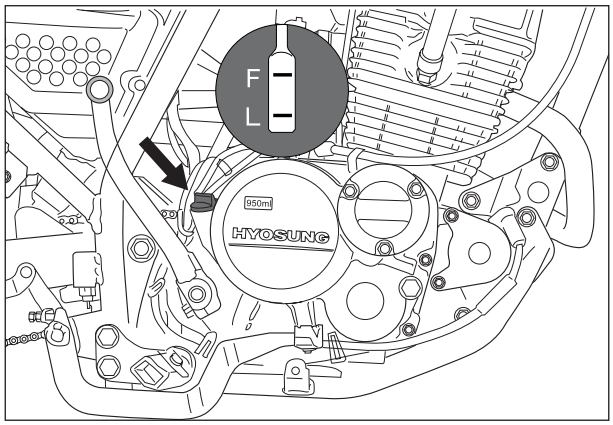

CARBURETOR

Inspect Interval

Inspect lintial 1,000 km and Every 4,000 km.

⊙ IDLE SPEED

⚠ CAUTION

Make this inspection when the engine is hot.

● Connect an engine tachometer to the high tension cord.
Start up the engine and set its speed at anywhere 1,400 and 1,500 rpm by turning throttle stop screw ①.

Engine idle speed	1,400～1,500 rpm

TOOL Engine tachometer : 09900-26006

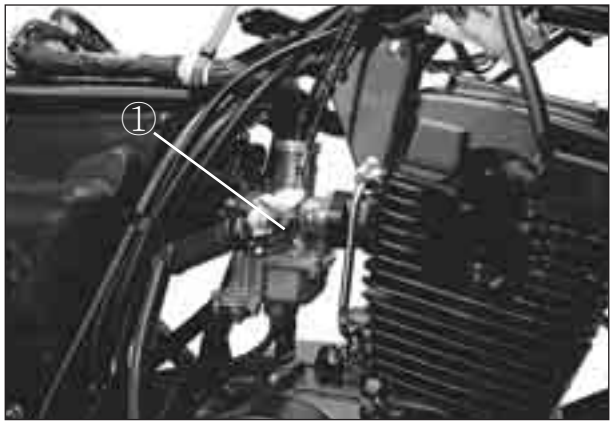

⊙ THROTTLE CABLE PLAY

There should be 0.5～1.0 mm play on the throttle cable.
To adjust the throttle cable play.

- Tug on the throttle cable to check the amount of play.
- Loosen the lock nut ① and turn the adjuster ② in or out until the specified play is obtained.
- Secure the lock nuts while holding the adjuster in place.

Throttle cable play Ⓐ	0.5～1.0 mm (0.02～0.04 in)

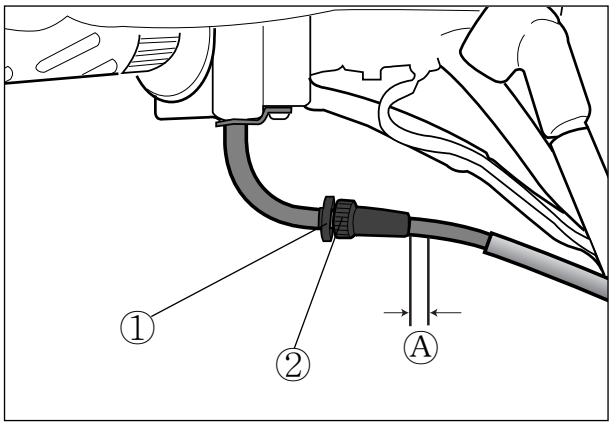

CLUTCH

Inspect Interval

Inspect lintial 1,000 km and Every 4,000 km.

Clutch play should be 4 mm as measured at the clutch lever holder before the clutch begins to disengage. If the play in the clutch is incorrect, adjust it in the following way :

- Loosen the lock nut ③ and screw the adjuster ④ on the clutch lever holder all the way in.
- Loosen clutch cable adjuster lock nut ⑤.
- Turn the clutch cable adjuster ⑥ in or out to acquire the specified play.
- Tighten lock nut while holding the adjuster in position.
- The clutch cable should be lubricated with a light weight oil whenever it is adjusted.

Clutch cable play Ⓑ	4 mm (0.16 in)

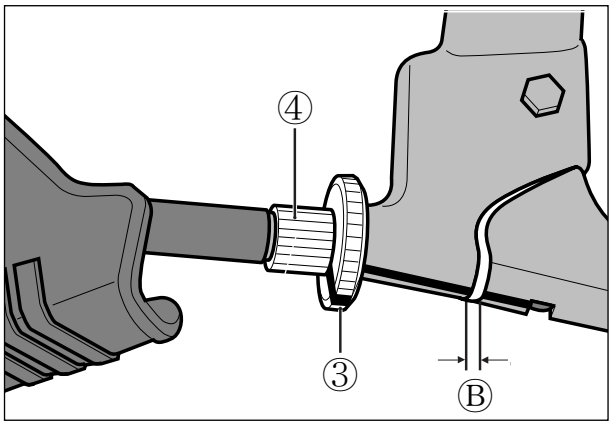

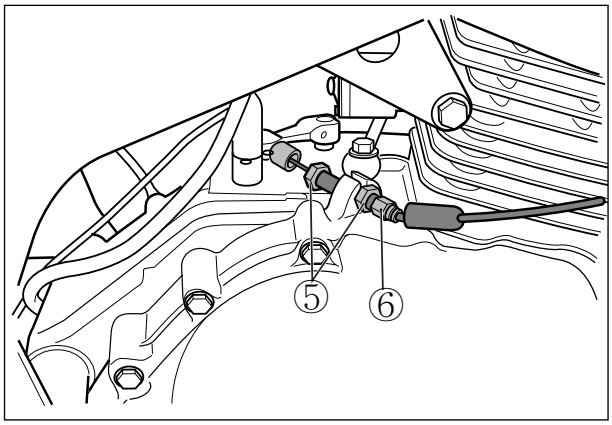

DRIVE CHAIN

Inspect Interval

Clean and Lubricate Every 1,000 km.

Visually check the drive chain for the possible defects listed below. (Support the motorcycle by the jack or block, turn the rear wheel slowly by hand with the transmission shifted to Neutral.)

- Loose pins
- Excessive wear
- Damaged rollers
- Improper chain adjustment
- Dry or rusted links
- Kinked or binding links

If any defects are found, the drive chain must be replaced.

NOTE
When replacing the drive chain, replace the drive chain and sprocket as a set.

- Loose the axle nut ①.

- Tense the drive chain fully by turning both chain adjusters ②, ③.

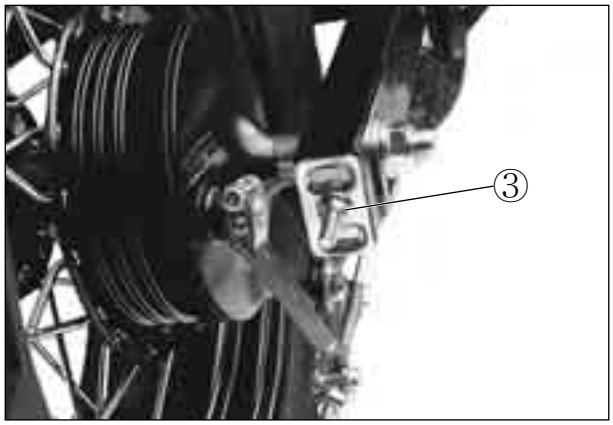

- Count out 21 pins (20 pitches) on the chain and measure the distance between the two points. If the distance exceeds the service limit, the chain must be replaced.

Drive chain 20-pitch length	Service limit
	256.5 mm (10.1 in)

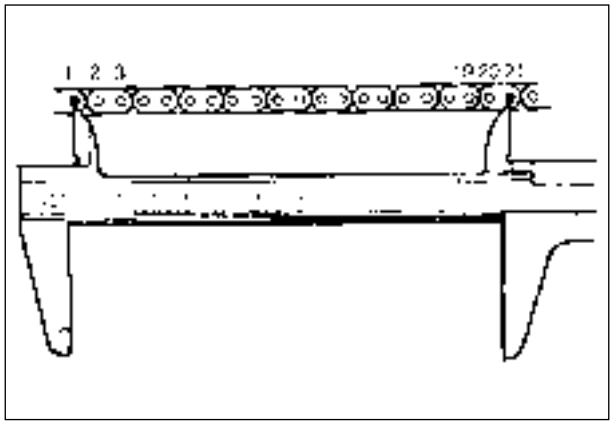

● Loosen or tighten both chain adjusters ①, ② until the chain has 20～30 mm of slack in the middle between the engine and rear sprockets. The marks ③, ④ on both chain adjusters must be at the same position on the scale to ensure that the front and rear wheels are correctly aligned.

Drive chain slack	20 ～ 30 mm (0.79 ～ 1.18 in)

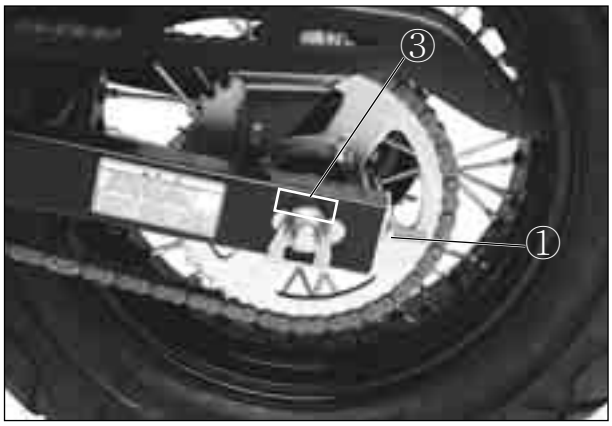

● Place the motorcycle on jack or block for accurate adjustment.
● After adjusting the drive chain, tighten the axle nut to the specified torque.

Rear axle nut : 90~140 N · m (9.0~14.0 kg · m)

● Tighten both chain adjusters ①, ② securely.

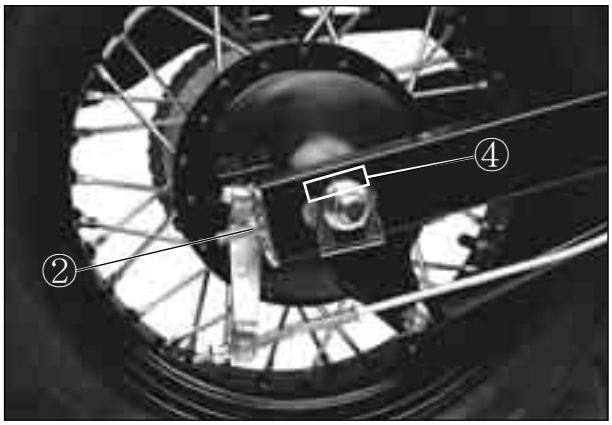

● Recheck the drive chain slack after tightening the axle nut.

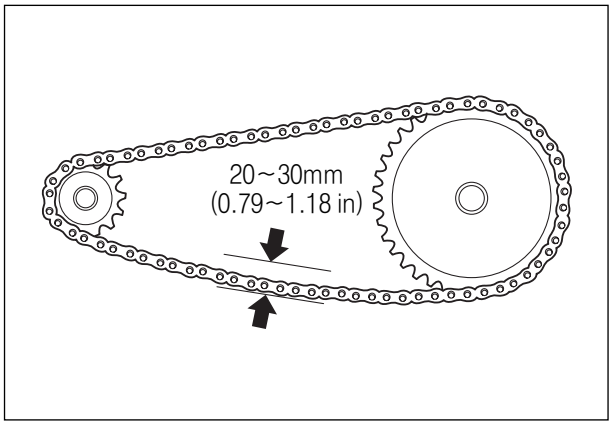

● Wash the drive chain with kerosine. If the drive chain tends to rust quickly, the intervals must be shortened.
● After washing and drying the chain, oil it with a engine oil or chain lubricating oil.

⚠ CAUTION

The standard drive chain is a 428SO Hyosung recommends that this standard drive chain should be used for the replacement.

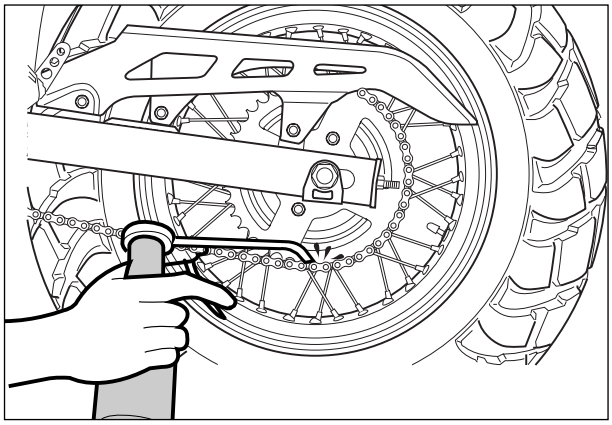

BRAKES

Inspect Interval

Inspect Initial 1,000 km and Every 4,000 km,
Replace the hoses Every four years,
Replace the brake fluid Eevery two years.

⊙ FRONT BRAKE

■ Brake fluid level

- Upright position of the motorcycle, and place the handlebars straight.
- Check the brake fluid level by observing the inspection window line on the brake fluid reservoir.
- When the level is below the lower limit line, replenish with brake fluid that meets the following specification.

BF Specification and Classification
: DOT 3 or DOT 4

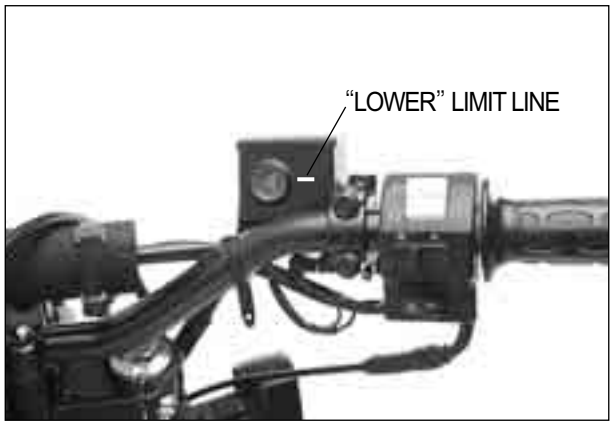

⚠ WARNING

The brake system of this motorcycle is filled with a glycol-based brake fluid. Do not use or mix different types of fluid such as silicone-based and petroleum-based fluid for refilling the system, otherwise serious damage will be caused. Do not use any brake fluid taken from old or used unsealed containers.
Never re-use the brake fluid left over from the last servicing and stored for long periods.

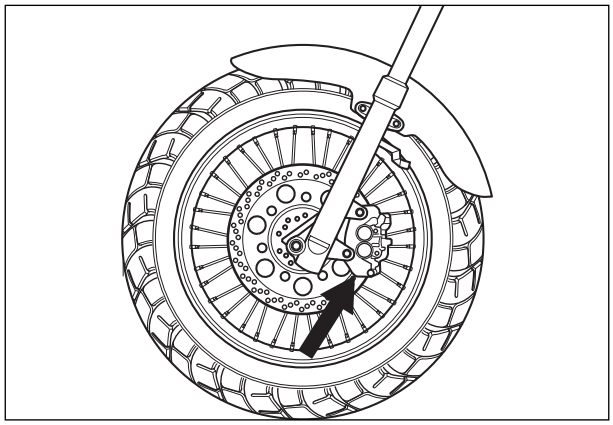

⚠ WARNING

Brake fluid, if it leaks, will interfere with safe running and immediately discolor painted surfaces.
Check the brake hoses for cracks and hose joint for leakage before riding.

■ Brake pads

Wearing condition of brake pads can be checked by observing the red limit line marked on the pad.
When the wear exceeds the limit line, replace the pads with new ones.

■ Brake light switch

Adjust the brake light switch with new one when brake light dose not come on just before a pressure is felt when the brake lever is squeezed.

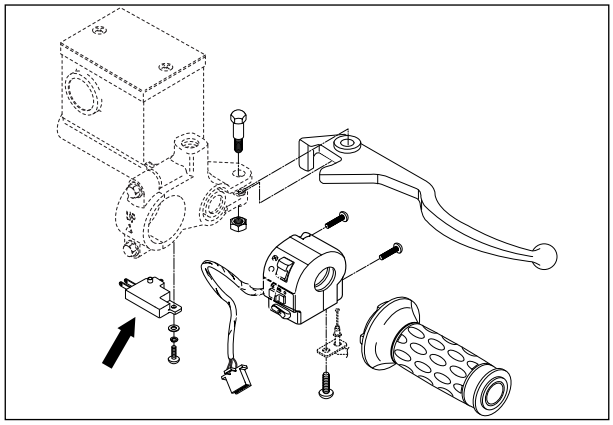

⊙ AIR BLEEDING OF THE BRAKE FLUID CIRCUIT

Air trapped in the brake fluid circuit acts like a cushion to absorb a large proportion of the pressure developed by the master cylinder and thus interferes with the full braking performance of the brake caliper. The presence of air is indicated by "sponginess" of the brake lever and also by lack of braking force. Considering the danger to which such trapped air exposes the machine and rider, it is essential that, after remounting the brake and restoring the brake system to the normal condition, the brake fluid circuit be purged of air in the following manner :

- Fill the master cylider reservoir to top of the inspection window. Replace the reservoir cap to prevent dirt from entering it.
- Attach a hose to the air bleeder valve, and insert the free end of the hose into a receptacle.
- Bleed air from the brake system.
- Squeeze and release the brake lever several times in rapid succession and sqeeze the lever fully without releasing it. Loosen the bleeder valve by turning it a quarter of a turn so that the brake fluid runs into the receptacle, this will remove the tension of the brake lever causing it to touch the handlebar grip. Then, close the air bleeder valve, pump and squeeze the brake lever, and open the valve. Repeat this process until the fluid flowing into the receptacle no longer contains air bubbles.

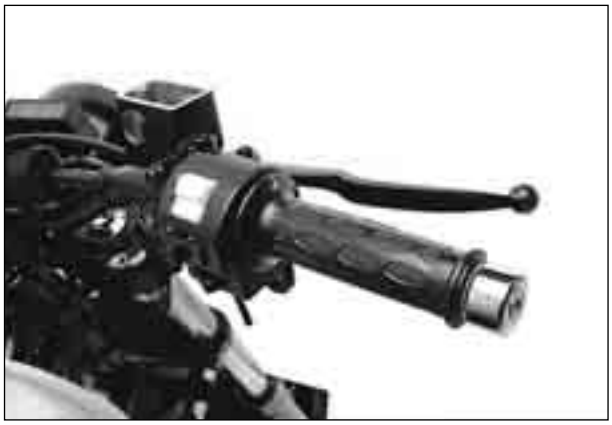

NOTE

While bleeding the brake system, replenish the brake fluid in the reservoir as necessary. Make sure that there is always some fluid visible in the reservoir.

- Close the air bleeder valve, and disconnect the hose. Fill the reservoir with brake fluid to the upper line.

Front brake caliper air bleeder valve
: 6~9 N · m (0.6~0.9 kg · m)

⚠ CAUTION

Handle brake fluid with care : the fluid reacts chemically with paint, plastics, rubber materials, etc.

REAR BRAKE

■ REAR BRAKE ADJUSTING

This is effected by turning the brake pedal stopper. Be sure to tighten the lock nut securely after setting the bolt.

After adjusting the rear brake height, adjust the brake pedal traval, First set the pedal at position for comfortable riding by turning the brake pedal stopper, and then adjust the free travel Ⓐ to 20~30 mm.

If adjustment is necessary, trun the rear brake adjuster Ⓑ to obtain the specific play.

Rear brake pedal free travel	20~30 mm (0.79~1.18 in)

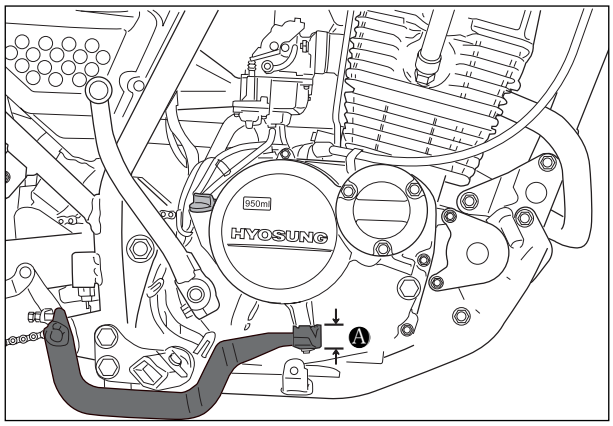

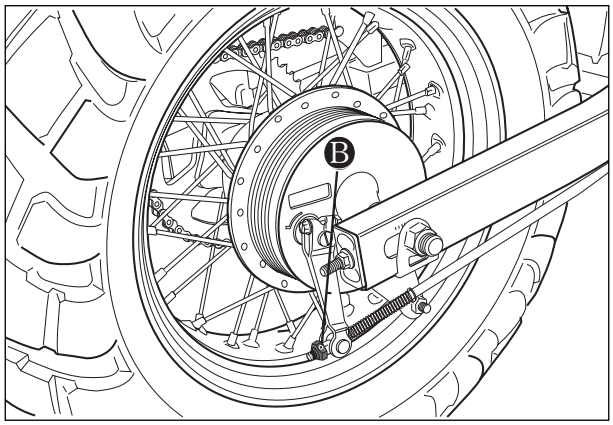

■ BRAKE LINING WEAR LIMIT

This motorcycle is equipped with brake lining wear limit indicators on the rear brake panel. As shown in the illustration at right, at the condition of normal lining wear, an extended line from the index mark on the brake camshaft should be within the range embossed on the brake panel with the brake on. To check wear of the brake lining, follow the steps below.

- First check if the brake system is properly adjusted.
- While operating the brake, check to see that the range on the brake panel.
- If the index mark is outside the range as shown in the illustration at right, the brake shoe assembly should be replaced to ensure safe operation.

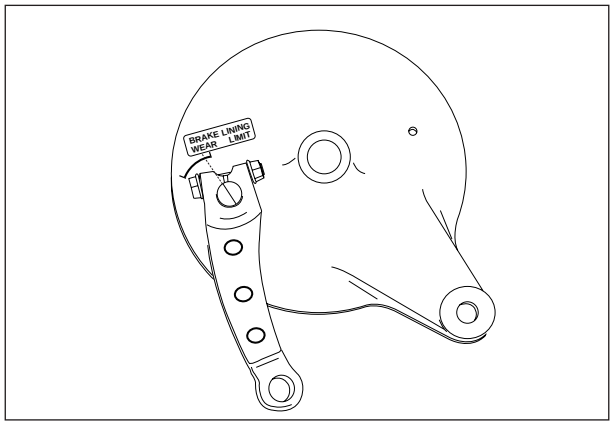

TIRES

Inspect Interval

Inspect Initial 1,000 km and Every 4,000 km.

⊙ TIRE TREAD CONDITION

Operating the motorcycle with excessively worn tires will decrease riding stability and can lead to loss of control.

- Inspect shortage of tire thread's depth by the 『 tire wear indicator 』.
- Replace the front and rear tires at once when appear the 『 tire wear indicator 』.

⊙ TIRE PRESSURE

If the tire pressure is too high or too low, steering will be adversely affected and tire wear increased. Therefore, maintain the correct tire pressure for good roadability or shorter tire life will result. Cold inflation tire pressure is as follows.

COLD INFLATION TIRE PRESSURE	SOLD RIDING			DUAL RIDING		
	KPa	kg/cm²	psi	KPa	kg/cm²	psi
Front	123	1.25	18.0	147	1.50	22.0
Rear	123	1.25	18.0	172	1.75	25.0

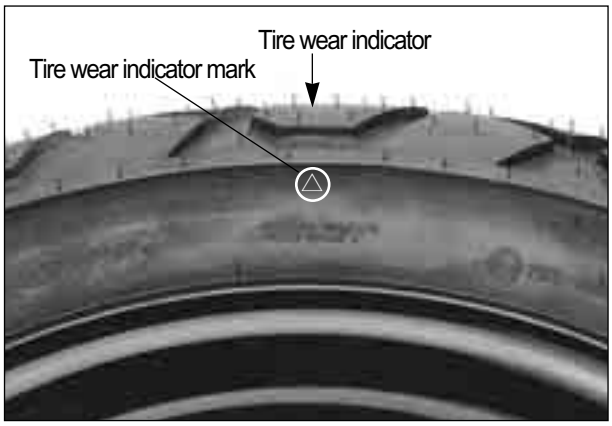

⚠ CAUTION

The standard tire on 『Karion』 is 130/80-18 66P for front and 180/80-14M/C 78P for rear.
The use of tires other than those specified may cause instability. It is highly recommended to use a HYOSUNG Genuine Tire.

STEERING

Inspect Interval

Inspect Initial 1,000 km and Every 4,000 km.

Steering should be adjusted properly for smooth turning of handlebars and safe running. Overtight steering prevents smooth turning of the handlebars and too loose steering will cause poor stability. Check that there is no play in th steering stem while grasping the lower fork tubes by supporting the machine so that the front wheel is off the ground, with the wheel straight ahead, and pull forward. If play is found, perform steering bearing adjustment as described in page 6-30 of this manual.

FRONT FORK

Inspect Interval

Inspect Every 4,000 km.

Inspect the front forks for oil leakage, scoring or scratches on the outer surface of the inner tubes. Replace any defective parts, if necessary.

REAR SUSPENSION

Inspect Interval

Inspect Every 4,000 km.

Inspect the rear shock absorber for oil leakage and mounting rubbers including engine mounting for wear and damage. Replace any defective parts, if necessary.

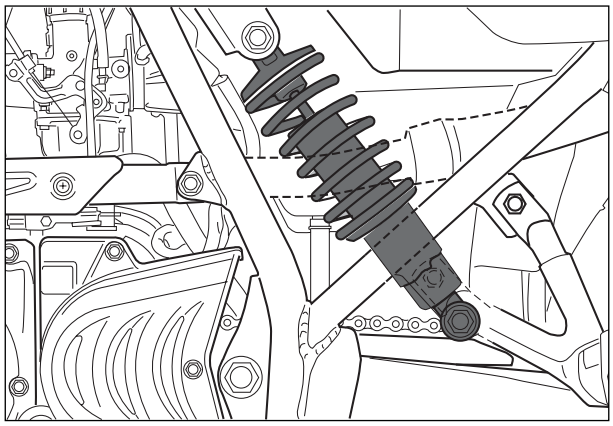

CHASSIS BOLTS AND NUTS

Inspect Interval

Tighten Initial 1,000 km and Every 4,000 km.

Check that all chassis bolts and nuts are tightened to their specified torque.(Refer to page 7-12)

COMPRESSION PRESSURE

The compression of a cylinder is a good indicator of its internal condition.
The decision to overhaul the cylinder is often based on the results of a compression test. Periodic maintenance records kept at your dealership should include compression reading for each maintenance service.

Compression pressure	
Standard	15.6 kg/cm^2 (at 500 rpm)
Service limit	8.0 kg/cm^2 (at 500 rpm)

Low compression pressure can indicate any of the following conditions :
- Excessively worn cylinder wall
- Worn-down piston or piston rings
- Piston rings stuck in grooves
- Poor seating of valves
- Ruptured or otherwise defective cylinder head gasket

⊙ COMPRESSION TEST PROCEDURE

NOTE

- **Before testing the engine for compression pressure, make sure that the cylinder head bolts are tightened to the specified torque values and valves are properly adjusted.**
- **Have the engine warmed up by idling before testing.**
- **Be sure that the battery used is in fully-charged condition.**

Remove the parts concerned and test the compression pressure in the following manner.
- Loosen the oil cooler mounting bolts from the frame.
- Remove all the spark plug.
- Fit the compression gauge in one of the plug holes, while taking care that the connection is tight.
- Keep the throttle grip in full-open position.
- Crank the engine a few seconds with the starter, and record the maximum gauge reading as the compression of that cylinder.

TOOL Compression gauge : 09915-64510

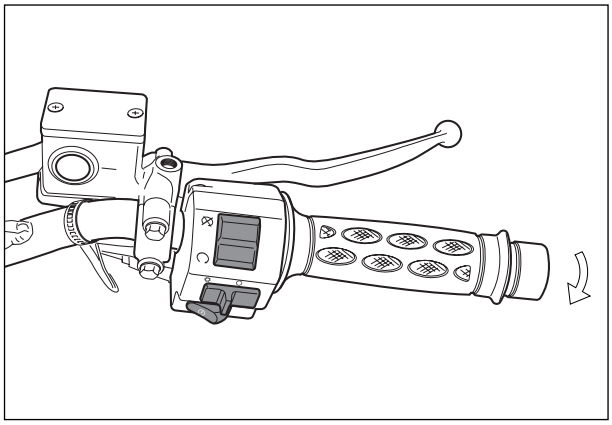

OIL PRESSURE

Check the oil pressure periodically. This will give a good indication of the condition of the moving parts.

	Standard
Oil pressure	0.3 - 0.5 kg/cm² (at 60 ℃ · 3,000 rpm)

If the oil pressure is lower or higher than the specification, the following causes may be considered.

⊙ LOW OIL PRESSURE

- Oil leakage from the oil passage
- Damaged O-ring
- Defective oil pump
- Combination of above items

⊙ HIGH OIL PRESSURE

- Engine oil viscosity is too high
- Clogged oil passage
- Combination of the above items

⊙ OIL PRESSURE TEST PROCEDURE

Check the oil pressure in the following manner.

- Remove the oil check plug and install the adapter of oil pressure gauge at the removed position.
- Connect an engine tachometer.
- Warm up the engine as follows :
  Summer : 10 min. at 2,000 rpm.
  Winter : 20 min. at 2,000 rpm.
- After warming up, increase the engine speed to 3,000 rpm. (with the engine tachometer), and read the oil pressure gauge.

TOOL **Oil pressure gauge : 09915-74510**
Engine tachometer : 09900-26006

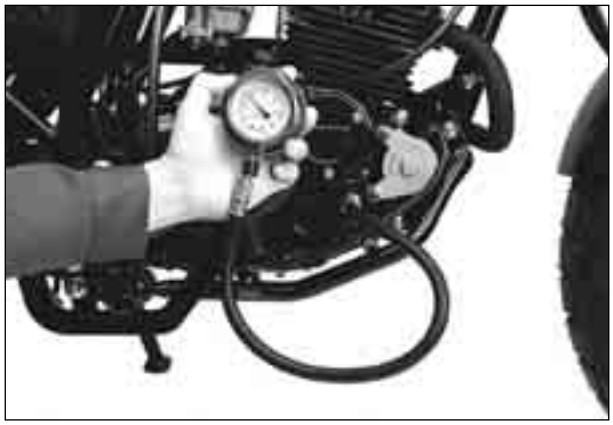

ENGINE

3

CONTENTS

ENGINE REMOVAL AND REMOUNTING 3-1

ENGINE REMOVAL 3-1

ENGINE REMOUNTING 3-5

UPPER END COMPONENTS DISASSEMBLY 3-6

UPPER END COMPONENTS INSPECTION AND SERVICING 3-10

UPPER END COMPONENTS REASSEMBLY 3-16

LEFT ENGINE DISASSEMBLY 3-22

RIGHT ENGINE DISASSEMBLY 3-23

LOWER END COMPONENTS DISASSEMBLY 3-26

LOWER END COMPONENTS INSPECTION AND SERVICING 3-29

LOWER END COMPONENTS REASSEMBLY 3-33

RIGHT ENGINE REASSEMBLY 3-39

LEFT ENGINE REASSEMBLY 3-43

ENGINE REMOVAL AND REMOUNTING

ENGINE REMOVAL

The procedure of engine removal is sequentially explained in the following steps.

NOTE
If the engine is dirtied, wash the machine with a suitable cleaner before removing the engine.

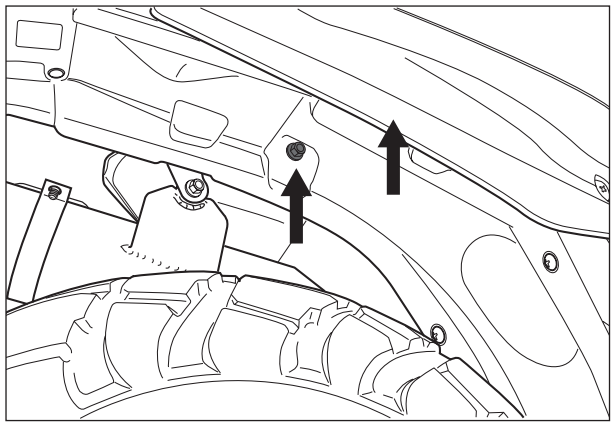

● Take off the seat by loose two volts below seat.

● Disconnect the ⊖ and ⊕ lead wires of battery ①.

⚠ CAUTION
First, disconnect the ⊖ lead wire.

● Turn the fuel cock lever to the "OFF" position.
● Take off the fuel hose.
● Remove the fuel tank.

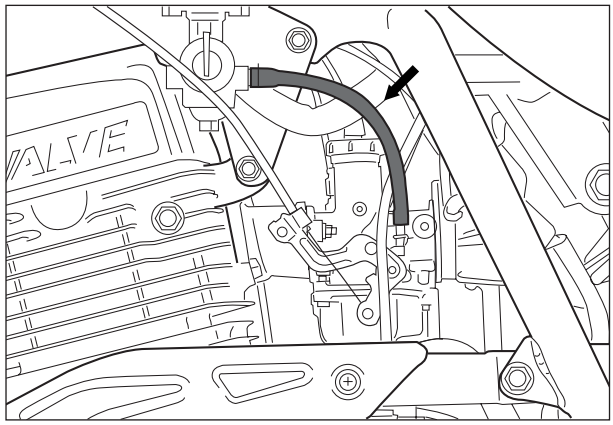

● Disconnect the clutch cable end out of clutch lever.
● Disconnect the clutch cable end out of clutch release arm.

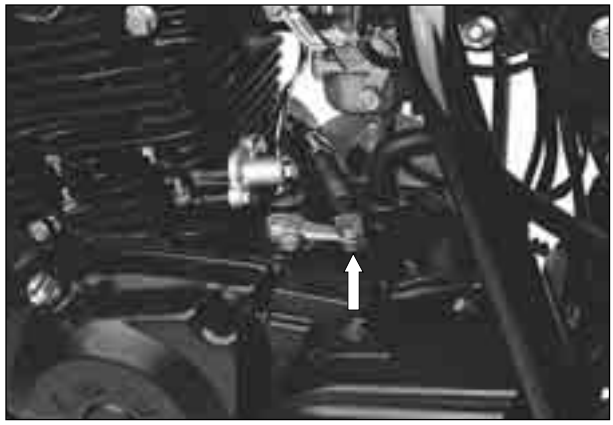

● Disconnect the lead wire of starter motor.

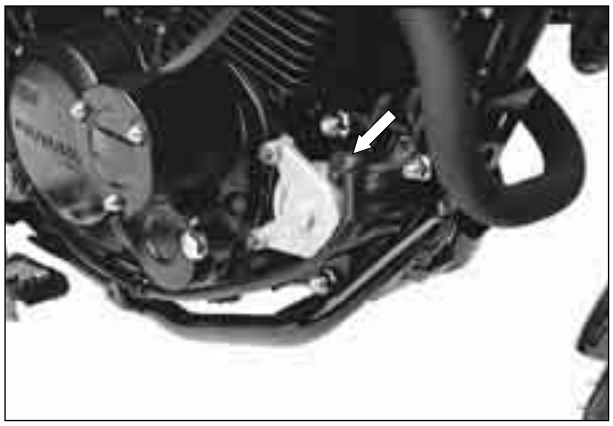

● Take off the spark plug cap.

● Disconnect the lead wire of magento.

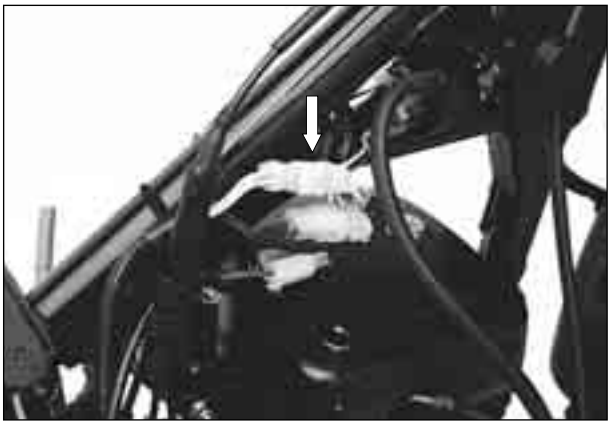

● Take off the breather hose.

● Loosen the two clamp screws, bolt and take off the carburetor.

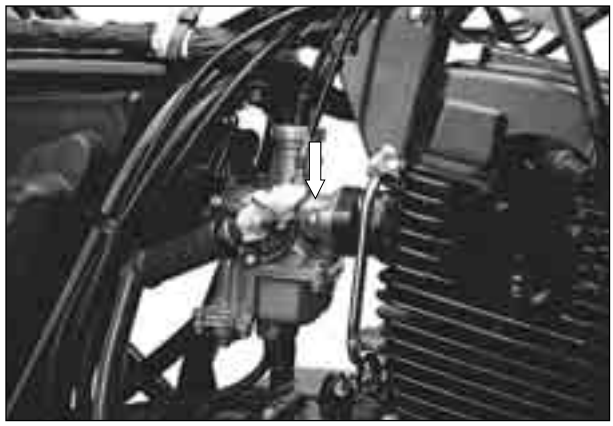

● Remove the engine sprocket cover.

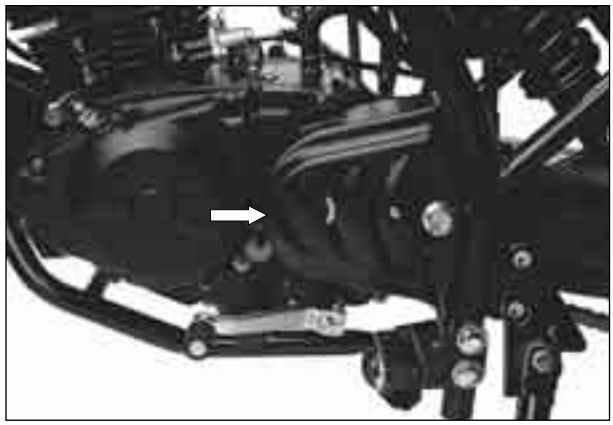

● Take off the drive chain by removing the clip.

● Disconnect the ground wire · from the crankcase.
● Take off the gear shift lever by removing the bolt.

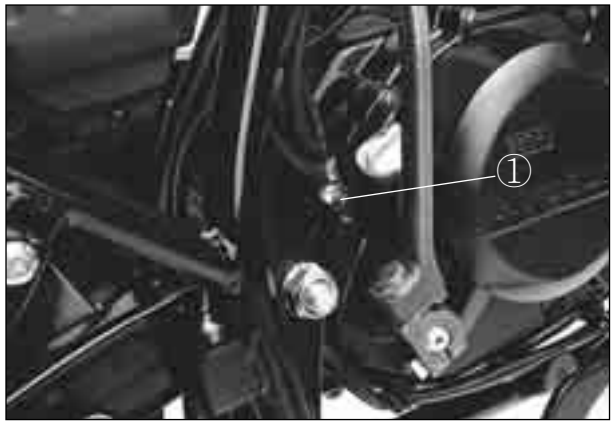

● Remove the exhaust pipe nuts, muffler mounting bolts and exhaust pipe clamp bolt, then take off the muffler.

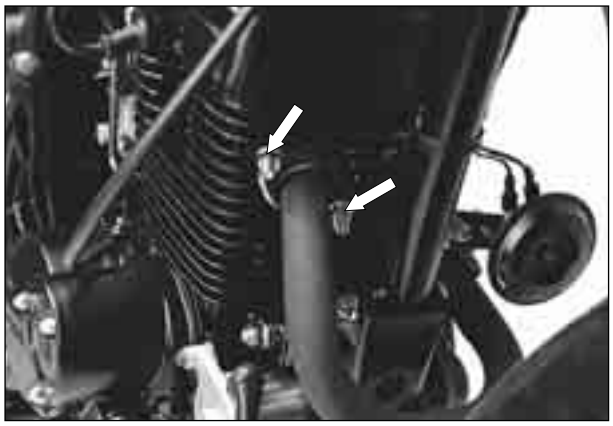

● Take out only one third of shaft after remove the swing arm pivot nut ˙.
● Remove engine mounting bolts ②, ③, ④, ⑤.
● After remove the swing arm pivot shaft, use both hands, and lift the engine from the frame.

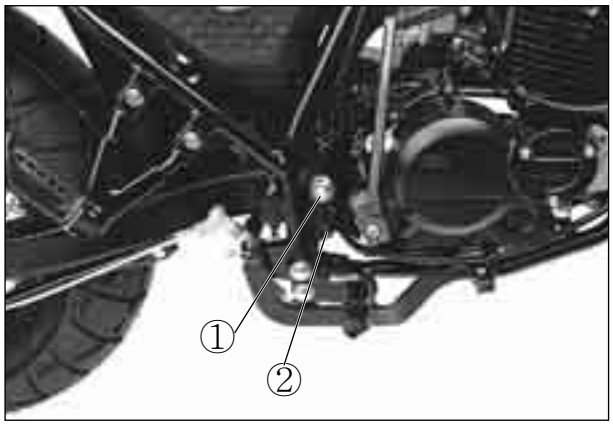

NOTE

The engine must be taken out from the right side.

⚠ CAUTION

Take out only one third from the left side to the right side swing arm pivot nut.

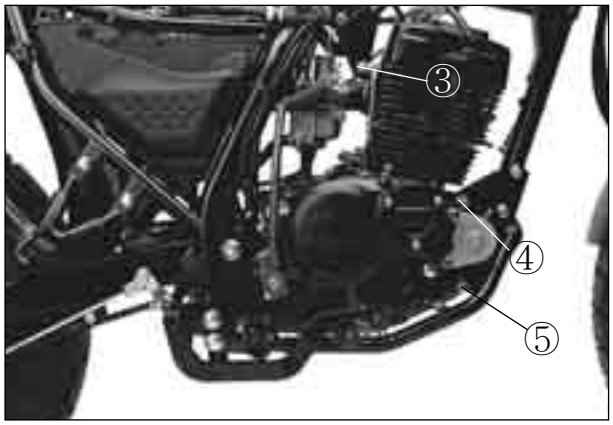

ENGINE REMOUNTING

The engine can be mounted in the reverse order of removal.

- Temporarily fasten the engine mounting bracket before inserting the engine mounting bolts.

⚠ CAUTION

The engine mounting nuts are self-lock nuts. Once the nut has been removed, it is no longer of any use. Be sure to use new nuts and tighten them to the specified torque.

Engine mounting bolt (M : 10 mm)
: 46~60 N · m (4.6~6.0 kg · m)
Engine mounting bolt (The others)
: 28~34 N · m (2.8~3.4 kg · m)
Exhaust pipe nuts and Muffler mounting bolts : 9~12 N · m (0.9~1.2 kg · m)
Exhaust pipe clamp bolt
: 9~12 N · m (0.9~1.2 kg · m)

- Pour 1,400 ㎖ of engine oil SAE 10W/30 or 10W/40 graded (API Over SG) into the engine after overhauling the engine.
- Start up the engine and allow it run for several seconds at idle speed. About one minute after stopping the engine, check the oil level.
  If the level is below mark "F", add oil to "F" level.
  If the level is above mark "F", drain oil to "F" level.

Installing position for clutch release arm

- Align the release arm slit surface with the notch mark on the release cam shaft.

- After remounting the engine, following adjustments are necessary.

❖ Throttle cable (Page : 2-11)
❖ Clutch cable (Page : 2-11)
❖ Drive chain (Page : 2-12)
❖ Rear brake pedal (Page : 2-16)
❖ Idling speed (Page : 2-10)

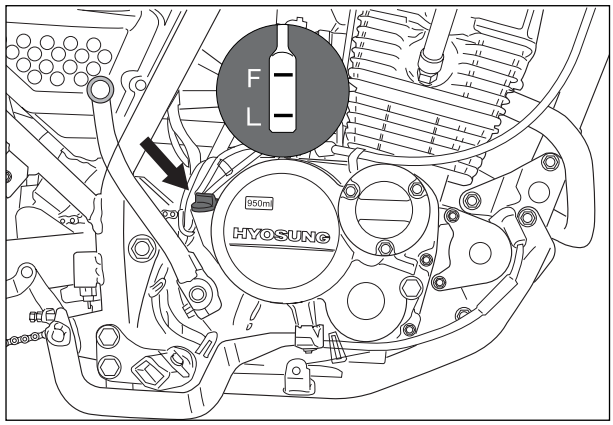

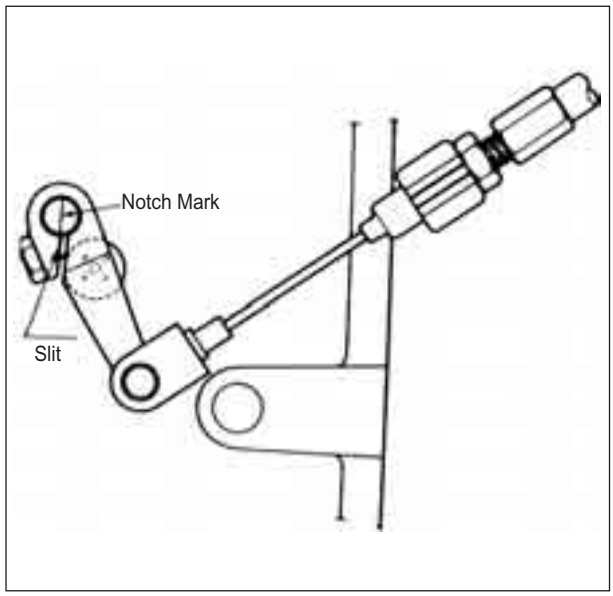

UPPER END COMPONENTS DISASSEMBLY

CYLINDER HEAD COVER-CAMSHAFT

⚠ CAUTION

When removing the cylinder head cover, the piston must be at top dead center on compression stroke.

- Remove the cam chain tensioner.

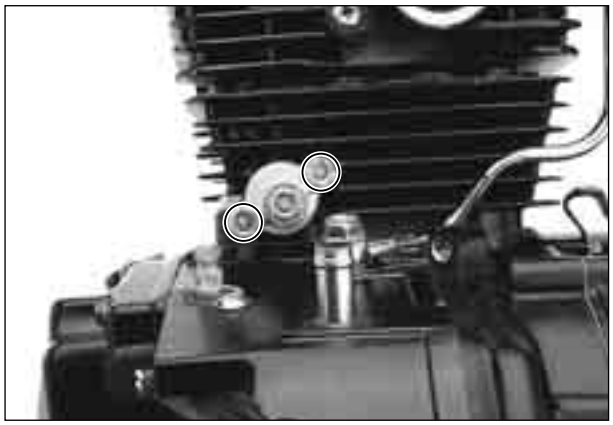

- Loosen the cylinder head cover bolts and detach the head cover.

- Loosen the camshaft holder lock nuts diagonally, then detach the camshaft holder.

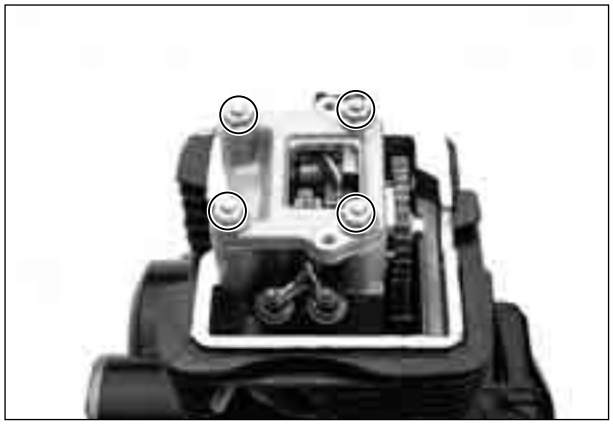

● Remove the cam sprocket center bolt.

⚠ CAUTION

This is a left-hand thread nut.

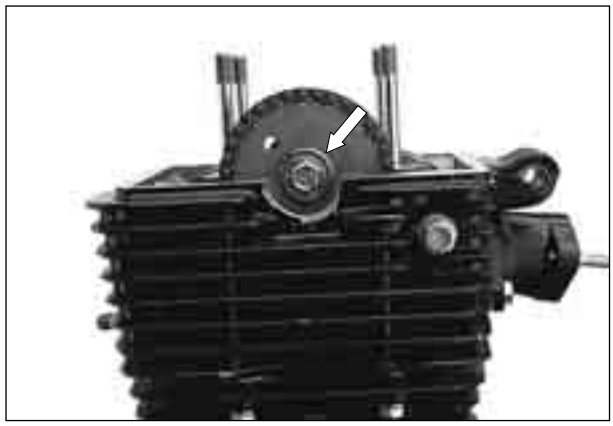

● Remove the camshaft ①, cam sprocket ② and C-ring ③

⚠ CAUTION

Do not drop the camshaft drive chain, key and sprocket into the crankcase.

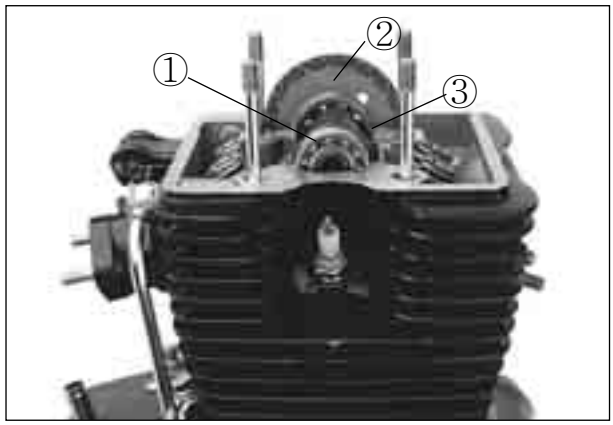

● Take off the rocker arm spring ⑤ from the dowel pin ④.

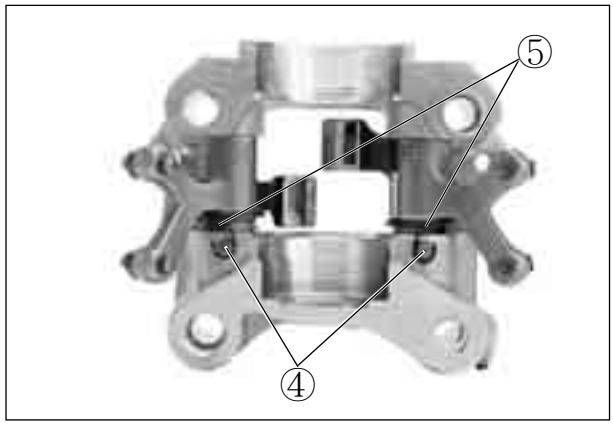

● Remove the dowel pin with the long-nose pliers.

- Install the bolt by the rocker arm shaft and pull out the rocker arm shaft.
- Remove the rocker arm and spring
- Remove the rocker arm shaft by the same manner at the opposite side.

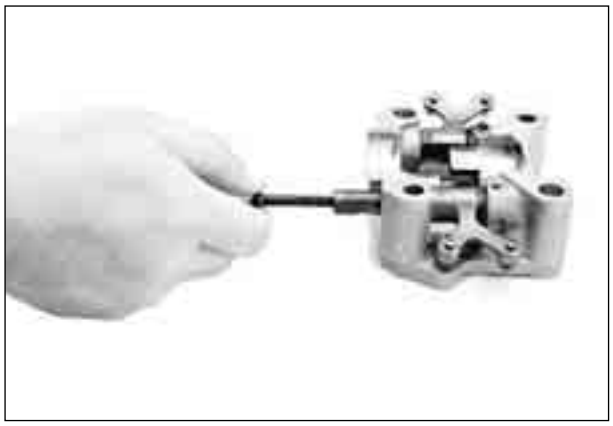

- Loosen the cylinder head nuts, then detach the cylinder head.

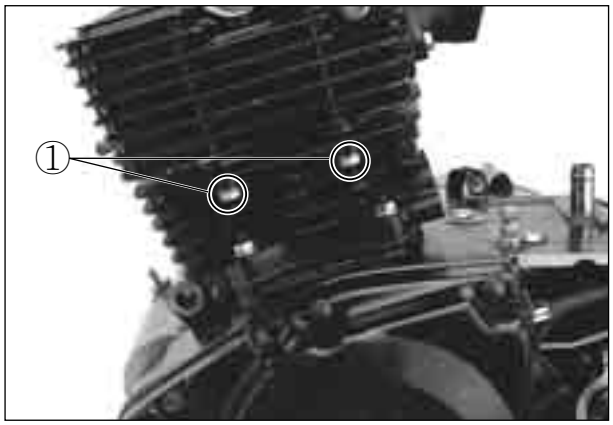

⚠ CAUTION

If it is difficult to remove the cylinder head, gently pry it off while tapping the finless portion of the cylinder head with a plastic hammer. Be careful not to break the fin.

- Compress the valve spring by using the special tool.

TOOL **Value spring compressor : 09916-14510**
Value spring compressor attachment : 09916H35C00

- Take off the valve cotters from the valve stem.
- Take out the valve spring retainer and spring.

⚠ CAUTION

Do not compress the valve spring more than necessity for prevent damage of the spring tension.

- Pull out the valve from the other side.

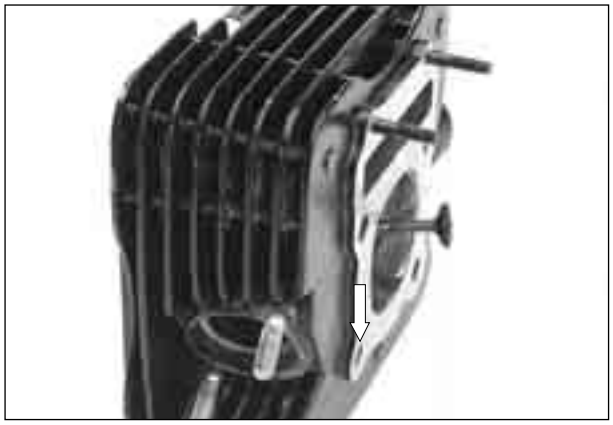

● Remove the oil seal, using the long-nose pliers.
● Take out the spring seat, valve guide.

⚠ CAUTION

Removed parts should be marked for install at the original position.

● Decarbonate in the combustion chamber.

CYLINDER

● Remove the cylinder base nuts and cylinder.

⚠ CAUTION

If tapping with the plastic hammer is necessary, do not break the fins.

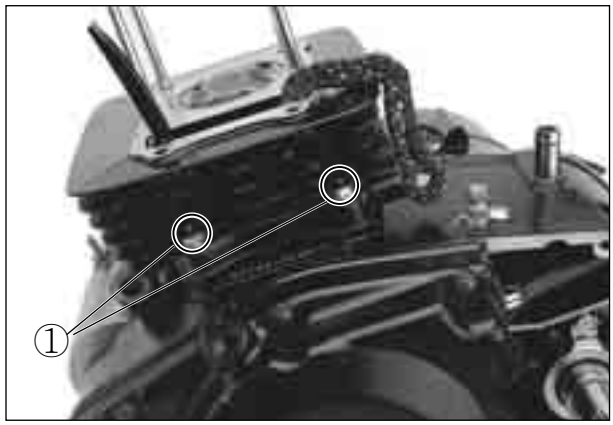

PISTON

● Place a clean rag over the cylinder base to prevent the piston pin circlip from dropping into the crankcase and then, remove the piston pin circlip with the long-nose pliers.

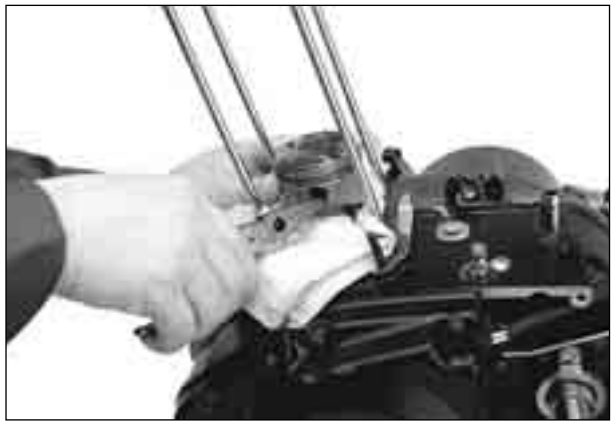

● Remove the piston pin.
TOOL **Piston pin puller : 09910-34510**

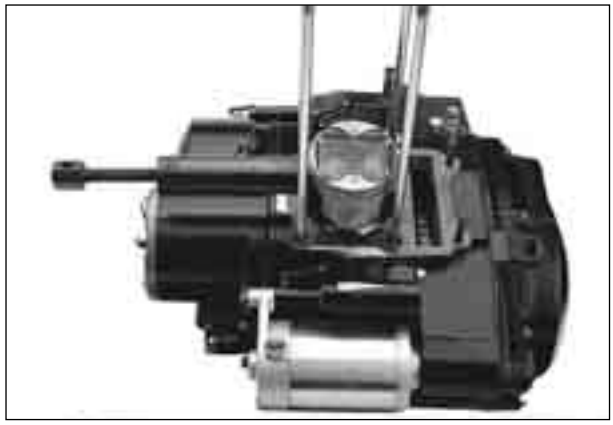

UPPER END COMPONENTS INSPECTION AND SERVICING

CAMSHAFT HOLDER DISTORTION

After removing the oil from the fitting surface of the camshaft holder, place the camshaft holder on a surface plate and check for distortion with a thickness gauge. Check points are shown in Fig.

Camshaft holder distortion	Service limit
	0.05mm (0.002 in)

TOOL Thickness gauge : 09900-20806

- If the distortion exceeds the service limit, replace the camshaft holder.

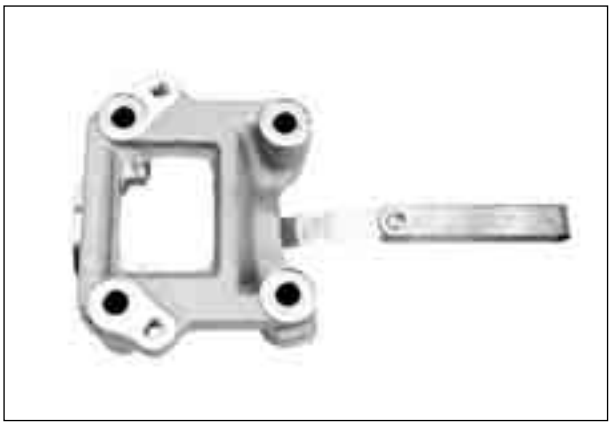

ROCKER ARM SHAFT O.D.

Measure the diameter of rocker arm shaft.

Rocker arm shaft O.D.	Standard
	11.977~11.995mm
	(0.4715~0.4722 in)

TOOL Micrometer(0~25 mm) : 09900-20201

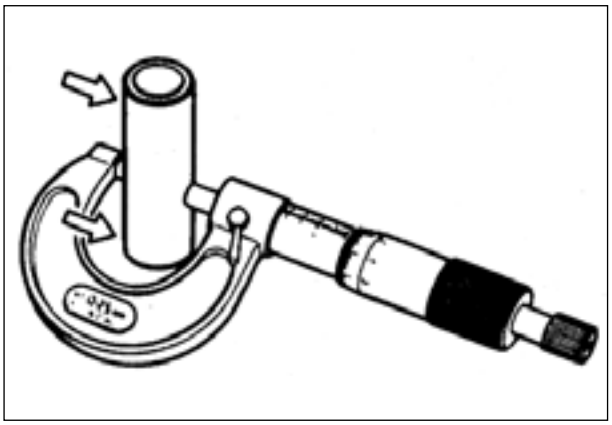

ROCKER ARM I.D.

When checking the valve rocker arm, the inside diameter of the valve rocker arm and wear of the camshaft contacting surface should be checked.

Rocker arm I.D.	Standard
	12.000～12.018mm
	(0.4724~0.4732 in)

TOOL Dial caliper : 09900-20605

CAMSHAFT

The camshaft should be checked for runout and also for wear of cams and journals if the engine has been noted to produce abnormal noise or vibration or a lack of output power. Any of these abnormality could be caused by a worn camshaft.

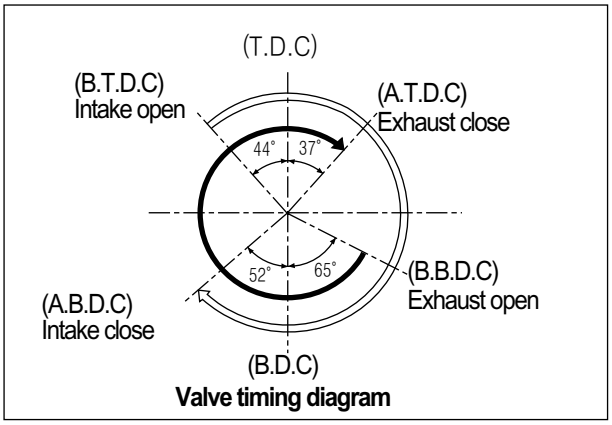

Valve timing diagram

⦿ CAMSHAFT CAM WEAR

Worn-down cams are often the cause of mistimed valve operation resulting in reduced output power. The limit of cam wear is specified for both intake and exhaust cams in terms of cam height Ⓗ, which is to be measured with a micrometer. Replace camshafts if found it worn down to the limit.

TOOL Micrometer (25~50 mm) : 09900-20202

Cam height Height Ⓗ	Service limit
Intake cam	34.18 mm (1.3457 in)
Exhaust cam	33.55 mm (1.3209 in)

Inspect the camshaft and the camshaft bearing wear, damage, or the oil hole is clogged.

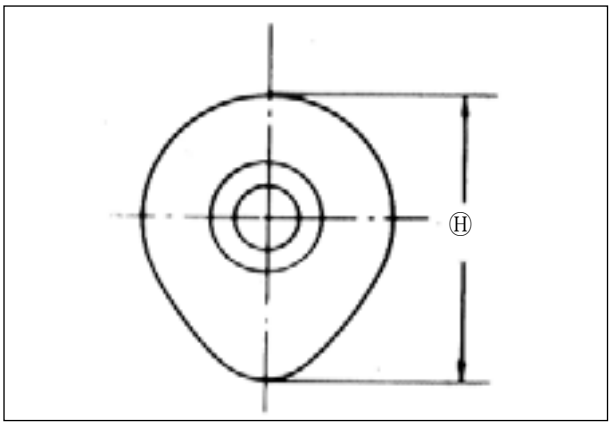

⦿ CYLINDER HEAD DISTORTION

Decarbonate in combustion chamber.
Check the gasketed surface of the cylinder head for distortion with a straightedge and thickness gauge, taking a clearance reading at several places as indicated. If the largest reading at any position of the straightedge exceeds the limit, replace the cylinder head.

Cylinder head distortion	Service limit
	0.05mm (0.002 in)

TOOL Thickness gauge : 09900-20806

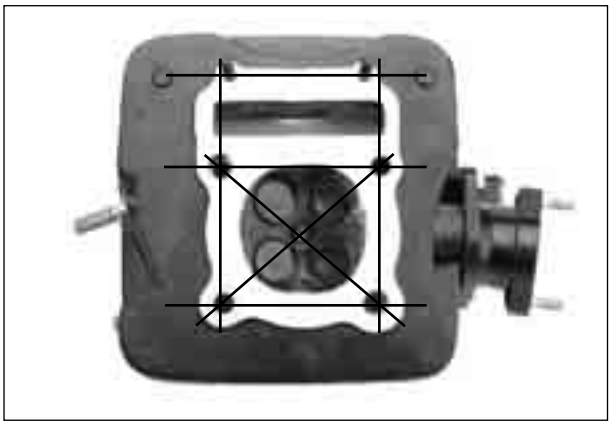

⦿ VALVE FACE WEAR

Visually inspect each valve face for wear. Replace any valve with an abnormally worn face. The thickness of the valve face decreases as the face wears. Measure the valve head Ⓣ. If it is out of specification, replace the valve with a new one.

Valve head thickness Ⓣ	Service limit
	0.5mm (0.02 in)

TOOL Vernier calipers : 09900-20101

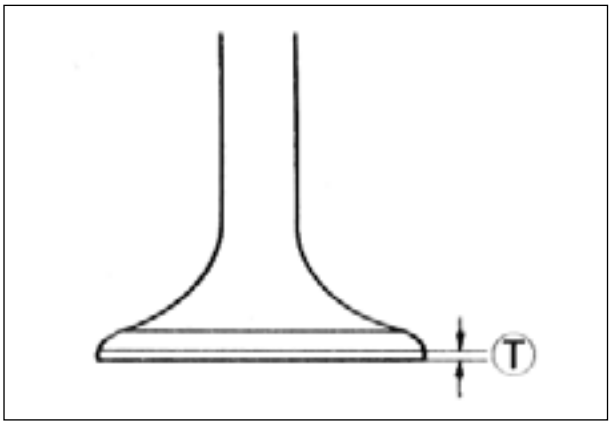

⦿ VALVE STEM RUNOUT

Check the valve stem for abnormal wear or bend.
Place the valve on V-blocks and measure runout.
If the service limit is exceeded or abnormal condition exists, replace the valve.

Valve stem runout	Service limit
	0.05mm (0.002 in)

TOOL Dial gauge : 09900-20606
Magnetic stand : 09900-20701
V-block : 09900-21304

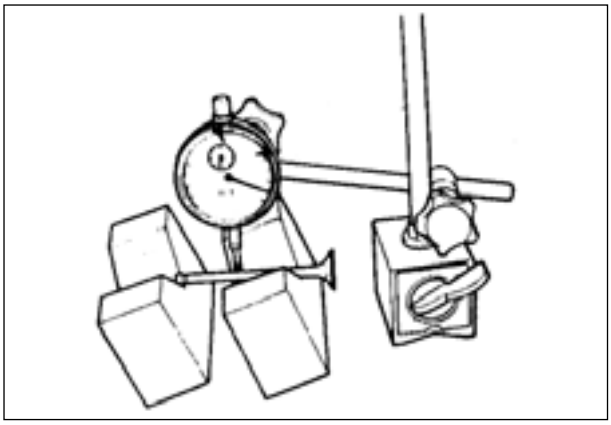

⊙ VALVE HEAD RADIAL RUNOUT

Place a dial gauge as shown and measure valve head radial runout.
If the service limit is exceeded, replace the valve.

Valve head radial runout	Service limit
	0.03 mm (0.0012 in)

TOOL Dial gauge : 09900-20606
Magnetic stand : 09900-20701
V-block : 09900-21304

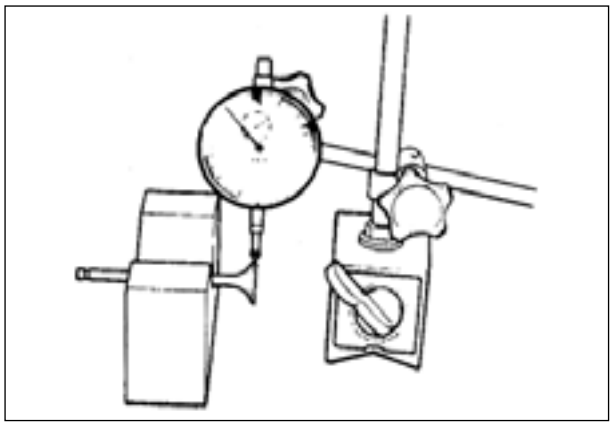

⊙ VALVE GUIDE-VALVE STEM CLEARANCE

Measure the clearance in the valve guide-valve stem, by rigging up the dial gauge as shown. If the clearance is measured exceeds the limit specified below, then determine whether the valve or the guide should be replaced to reduce the clearance to within the standard range:

Valve guide-valve stem clearance	Standard
IN.	0.010～0.037 mm (0.0004～0.0015 in)
EX.	0.030～0.057 mm (0.0012～0.0022 in)

TOOL Dial gauge : 09900-20606
Magnetic stand : 09900-20701

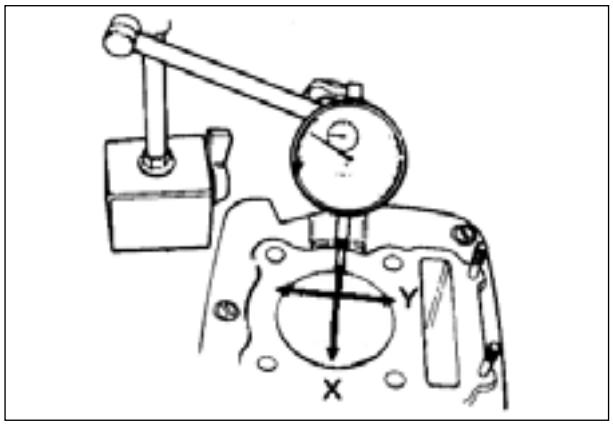

⊙ VALVE STEM DIAMETER

Measure the valve stem outside diameter.
If the diameter measured exceeds the standard, replace the valve.

Valve stem diameter	Standard
IN.	4.975~4.990 mm (0.1959 -0.1965 in)
EX.	4.955~4.970 mm (0.1951 -0.1957 in)

TOOL Micrometer(0~25 mm) : 09900-20201

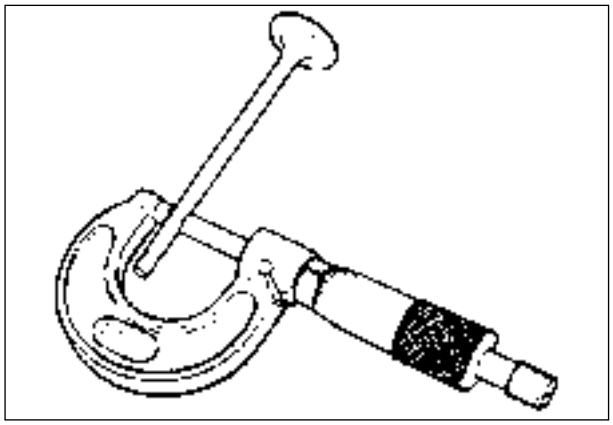

⊙ VALVE SPRING

The force of the coil spring keeps the valve seat tight. A weakened spring results in reduced engine power output and often accounts for the chattering noise coming from the valve mechanism.
Check the valve springs for proper strength by measuring their free length and also by the force required to compress them. If the spring length is less than the service limit or if the force required to compress the spring does not fall within the specified range, replace both the inner and outer springs as a set.

Valve spring free length(IN. & EX.)	Service limit
	41.65 mm (1.64 in)

TOOL Venier calipers : 09900-20101

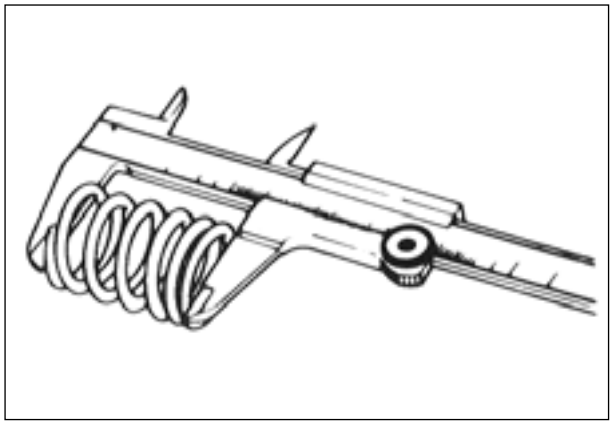

Valve spring tension (IN. & EX.)	Standard
	13.6~16.6 kgf (29.98～36.60 lbs) at length 36.6 mm (1.44 in)

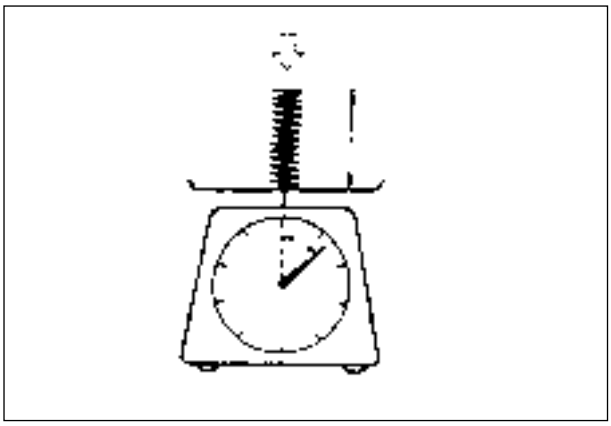

⦿ CYLINDER DISTORTION

Check the gasketed surface of the cylinder for distortion with a straightedge and thickness gauge, taking a clearance reading at several places as indicated. If the largest reading at any position of the straightedge exceeds the limit, replace the cylinder.

Cylinder distortion	Service limit
	0.05 mm (0.002 in)

TOOL Thickness gauge : 09900-20806

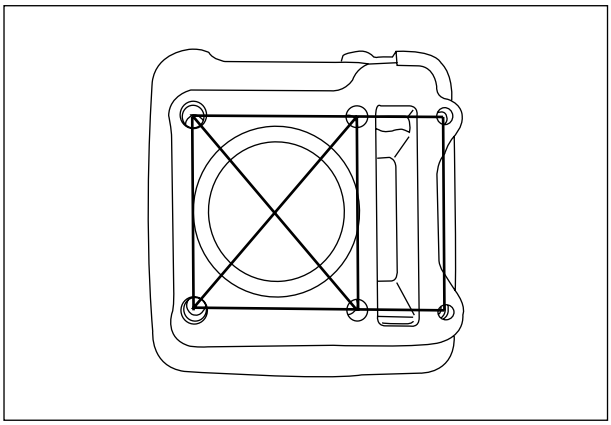

⦿ CYLINDER BORE

Measure the cylinder bore diameter at six place. If any one of the measurements exceeds the limit, overhaul the cylinder and replace the piston with an oversize, or replace the cylinder.

Cylinder bore	Service limit
	57.080 mm (2.2473 in)

TOOL Cylinder gauge set : 09900-20508

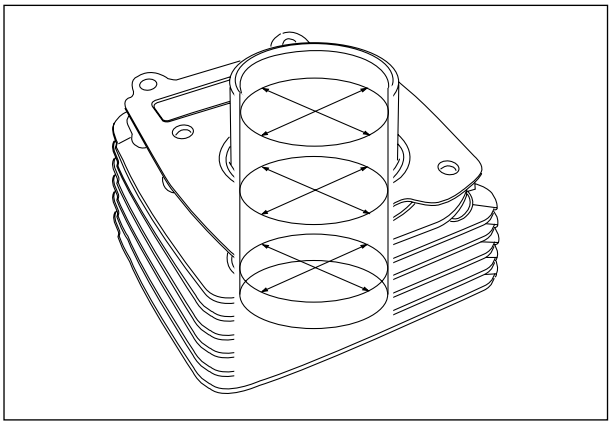

⦿ PISTON DIAMETER INSPECTION

Using a micrometer, measure the piston outside diameter at the place 15 mm from the skirt end as shown in Fig. If the measurement is less than the limit, replace the piston.

Piston diameter	Service limit
	56.880 mm (2.2394 in)

Piston oversize	0.5, 1.0 mm (0.02, 0.04 in)

TOOL Micrometer(50~75 mm) : 09900-20203

⚠ CAUTION

Using a soft-metal scraper, decarbon the crown of the piston. Clean the ring grooves similarly.

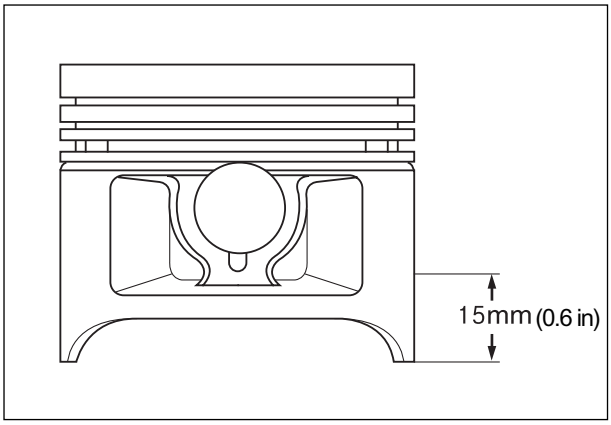

⦿ PISTON-CYLINDER CLEARANCE

As a result of the above measurement, if the piston to cylinder clearance exceeds the limit shown in the table below, overhaul the cylinder and use an oversize piston, or replace both cylinder and piston.

Piston to cylinder clearance	Service limit
	0.120 mm (0.0047 in)

⦿ PISTON RING-GROOVE CLEARANCE

Using a thickness gauge, measure the side clearance of the 1st and 2nd rings. If any of the clearances exceeds the limit, replace both piston and piston rings.

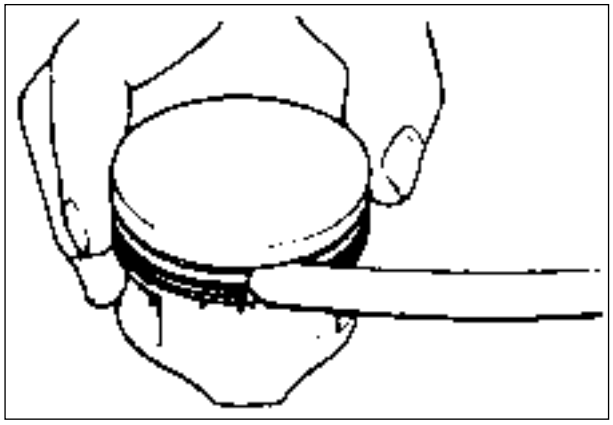

Piston ring-groove clearance	Service limit
1st	0.180 mm (0.0071 in)
2nd	0.150 mm (0.0059 in)

Piston ring-groove width	Standard
1st	1.01~1.03 mm (0.0398 - -0.0406 in)
2nd	1.01~1.03 mm (0.0398 - -0.0406 in)
Oil	2.01~2.03 mm (0.0791 - -0.0799in)

TOOL **Thickness gauge : 09900-20806**

⦿ PISTON RING FREE END GAP INSPECTION

Before installing piston rings, measure the free end gap of each ring using vernier calipers. If the gap is less than the service limit, replace the ring.

Piston ring end gap(Free condition)	Standard
1st	7.2 mm (0.28 in)
2nd	5.8 mm (0.23 in)

Piston ring end gap(Free condition)	Service limit
1st	5.7 mm (0.22 in)
2nd	4.6 mm (0.18 in)

TOOL **Vernier calipers : 09900-20101**

⦿ PISTON RING END GAP INSPECTION

Insert the piston ring squarely into the cylinder using the piston head.
Measure the end gap with a thickness gauge.
If the gap exceeds the service limit, replace the piston ring.

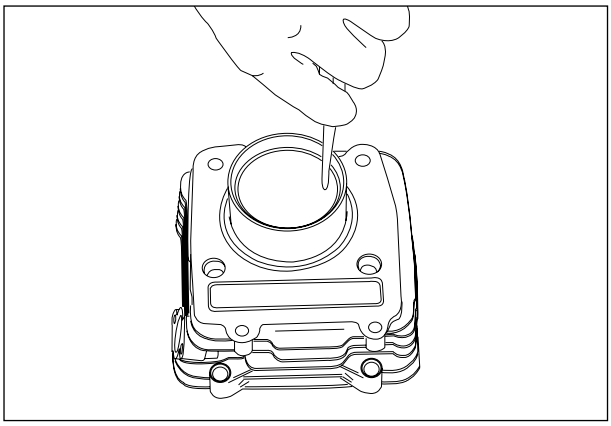

Piston ring end gap(Assembling condition)	Standard
1st	0.20~0.32 mm (0.0079 - -0.0126 in)
2nd	0.20~0.32 mm (0.0079 - -0.0126 in)

Piston ring end gap(Assembling condition)	Service limit
1st	0.50 mm (0.0197 in)
2nd	0.50mm (0.0197 in)

Piston ring thickness	Standard
1st	0.970~0.990 mm (0.0382 - - 0.0390 in)
2nd	0.970~0.990 mm (0.0382 - - 0.0390 in)

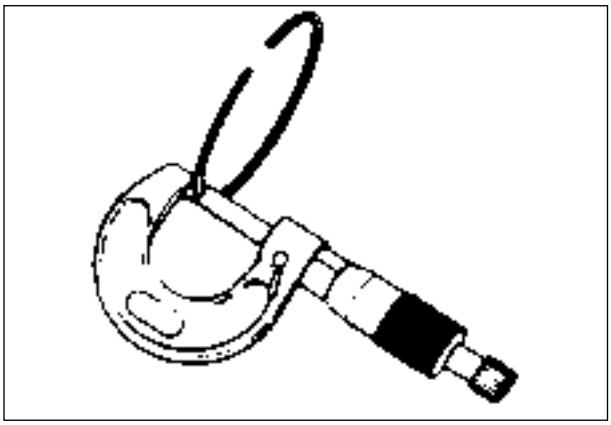

TOOL Thickness gauge : 09900-20806
Micrometer(0~25 mm) : 09900-20201

⦿ OVERSIZE RINGS

■ Oversize piston ring

The following two types of oversize piston ring are used.
They bear the following identification numbers.

Oversize piston ring	1st	2nd
0.5 mm	05	05
1.0 mm	10	10

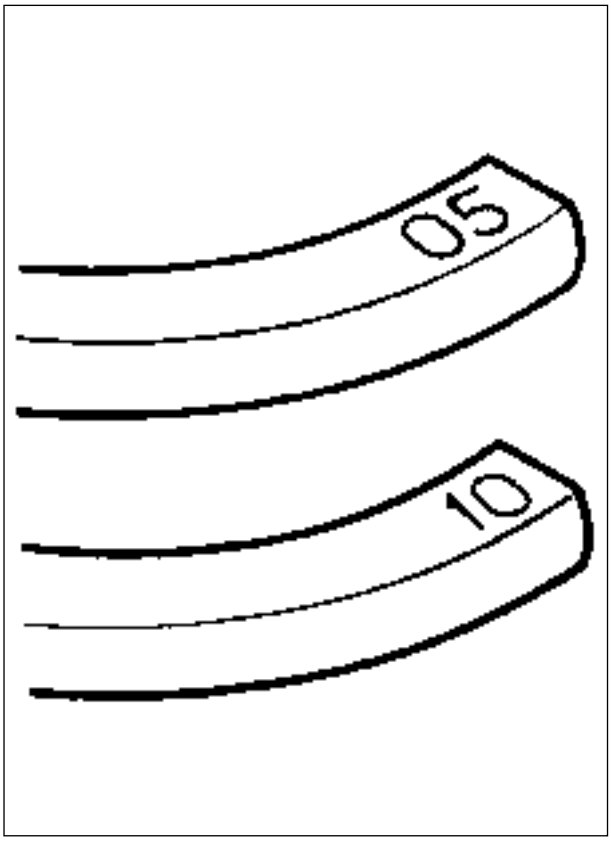

■ Oversize oil ring

The following two types of oversize oil ring are used.
They bear the following identification marks.

Oversize oil ring	Color classification
0.5 mm	Painted red
1.0 mm	Painted yellow

⊙ PISTON PIN HOLE BORE

Using a dial calipers, measure the piston pin hole bore both in the vertical and horizontal directions.
If the measurement exceeds the service limit, replace the piston.

Piston pin hole bore	Service limit
	15.030 mm (0.5917 in)

TOOL Dial calipers : 09900-20605

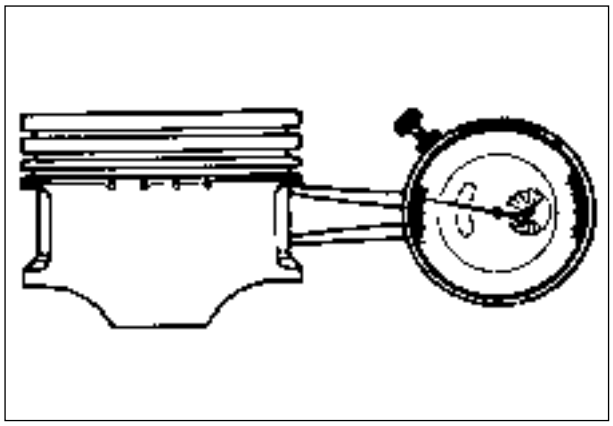

⊙ PISTON PIN DIAMETER INSPECTION

Using a micrometer, measure the piston pin outside diameter at three position, both the ends and the center.
If any of the measurements is founds less than the service limit, replace the pin.

Piston pin diameter	Service limit
	14.980 mm (0.5897 in)

TOOL Micrometer(0~25 mm) : 09900-20201

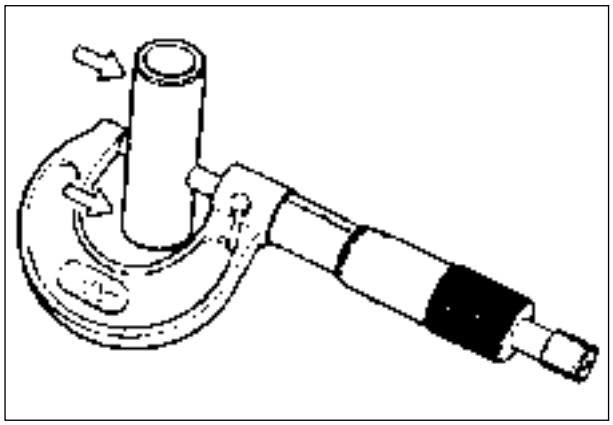

UPPER END COMPONENTS REASSEMBLY

⊙ PISTON RING

- Install the piston ring in order of oil ring, 2nd ring and 1st ring.

⚠ CAUTION

Be careful not to cause scratch on the piston when inserting the piston ring to the piston.
Also, do not expand the piston ring more than necessary as the ring can break.

- When all the piston rings have been assembled, check that each can turn smoothly.
- To minimize compression and oil leaks, locate each piston ring end gap in the position as shown in the right illustration
  ① 2nd ring / side rail(Upper side)
  ② Side rail(Lower side)
  ③ 1st ring / spacer

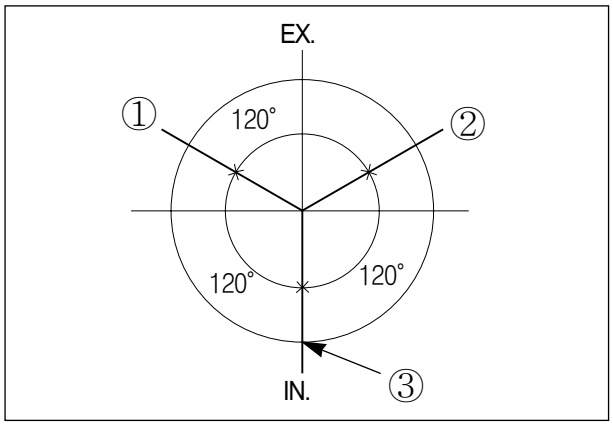

⊙ PISTON

The following are reminders for piston installation:

- Rub a small quantity of MOLY PASTE onto the piston pin.

  MOLY PASTE

- Place a clean rag over the cylinder base to prevent piston pin circlip from dropping into crankcase, and then fit the piston pin circlip with long-nose pliers.

⚠ CAUTION

Use a new piston pin circlip to prevent circlip failure which will occur with a bent one.

- When fitting the piston, turn arrow mark on the piston head to exhaust side.

CYLINDER

Before mounting the cylinder, oil the big end and small end of the conrod and also the sliding surface of the piston.

- Fit dowel pins ① to crankcase and then fit gasket.

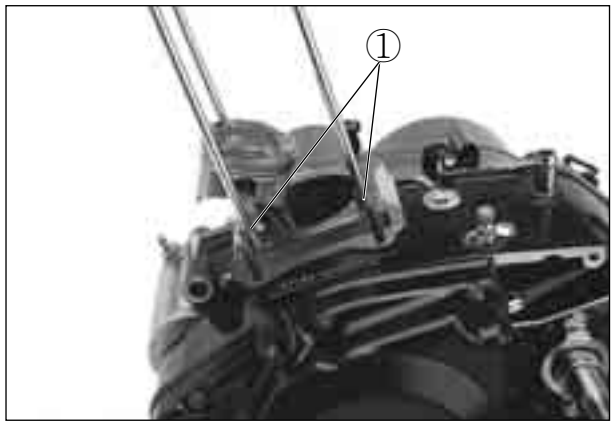

⚠ CAUTION

To prevent oil leakage, do not use the old gasket again, always use new one.

- Hold each piston ring with the piston rings properly spaced and insert them into the cylinder.
  Check to insure that the piston rings are properly inserted into the cylinder skirt.

⚠ CAUTION

When mounting the cylinder, after attaching camshaft drive chain, keep the camshaft drive chain taut. The camshaft drive chain must not be caught between cam drive chain sprocket and crankcase when crankshaft is rotated.

⚠ CAUTION

There is a holder for the bottom end of the cam chain guide cast in the crankcase. Be sure that the guide is inserted properly or binding of the cam chain and guide may result.

⊙ VALVE AND SPRING

● Insert the valves, with their stems coated with (MOLY PASTE) all around and along the full stem length without any break.
Similarly oil the lip of the stem seal.

MOLY PASTE

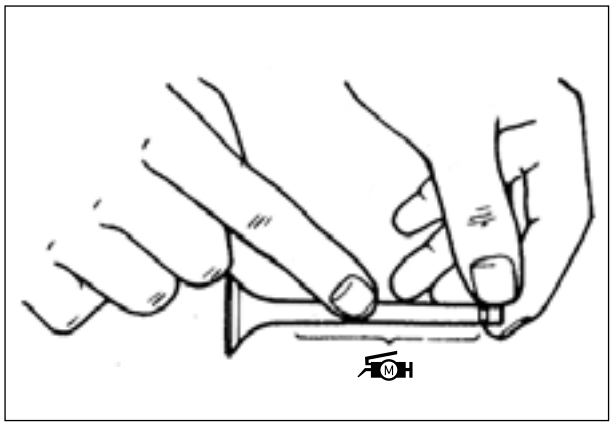

⚠ CAUTION

When inserting each valve, take care not to damage the lip of the stem seal.

● Insert valve springs, making sure that the close-pitch end of each spring goes in first to rest on the head. The coil pitch is vary: the pitch decreases from top to bottom, as shown in the illustration.

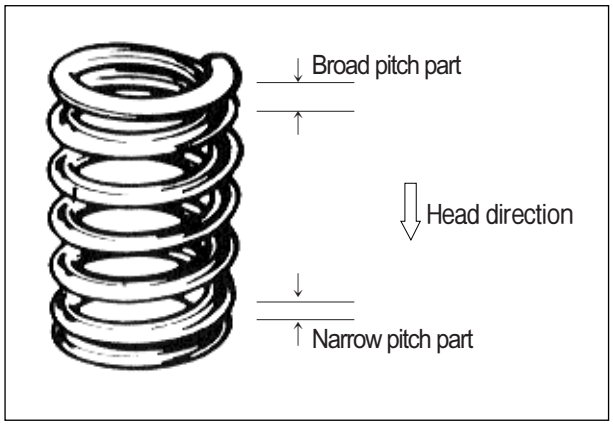

● Fit valve spring retainer, compress spring with a valve spring compressor and insert cotters.

TOOL Valve spring compressor : 09916-14510
Value spring compressor attachment : 09916H35C00

CYLINDER HEAD

● Fit dowel pins ① to cylinder head, and then attach new gasket to cylinder head.

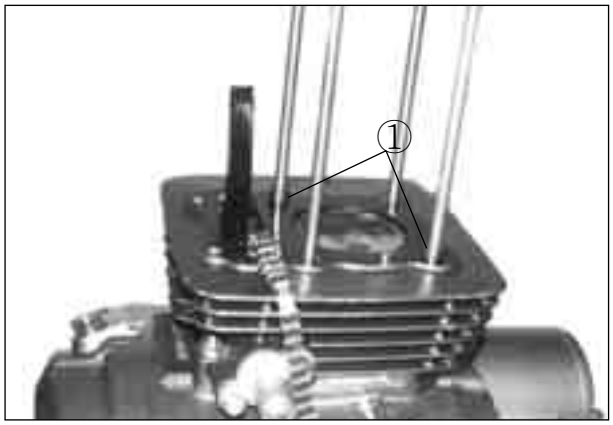

⚠ CAUTION

Use a new cylinder head gasket to prevent oil leakage. Do not use the old gasket.

● Fit the cylinder head.
● Tighten the cylinder nuts ②.

Cylinder nut : 7~11 N · m (0.7~1.1 kg · m)

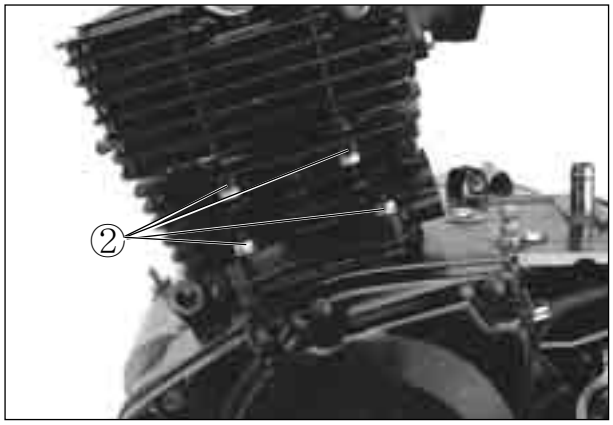

⚠ CAUTION

When mounting the cylinder, after attaching camshaft drive chain, keep the camshaft drive chain taut. The camshaft drive chain must not be caught between cam drive chain sprocket and crankcase when crankshaft is rotated.

⊙ CAMSHAFT

● Align the mark on magneto rotor with the index mark on the crankcase keeping the camshaft drive chain pulled upward.

⚠ CAUTION

If crankshaft is turned without drawing the camshaft drive chain upward, the chain will be caught between crankcase and cam chain drive sprocket.

● Install the camshaft ①, bearing ② and cam sprocket ③,tighten the bolt ④.

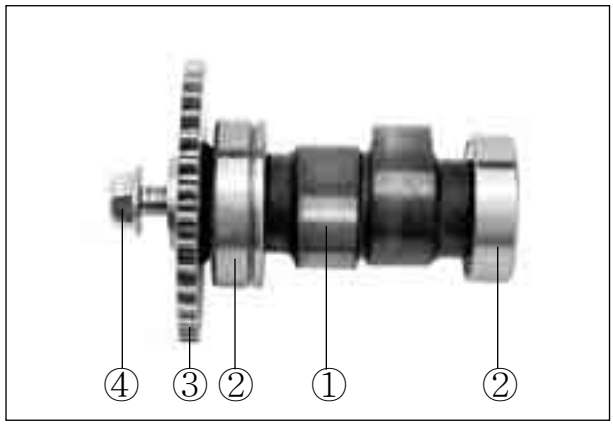

⚠ CAUTION

This ④ is a left-hand thread bolt.

● Align the key-groove on the camshaft so it is vertical with the surface of the cylinder head.

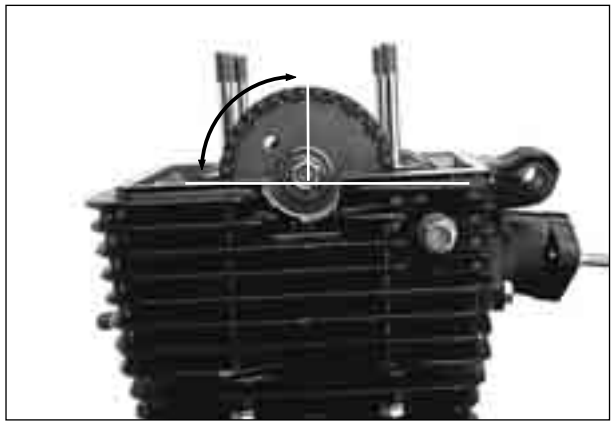

⚠ CAUTION

Do not rotate magneto rotor while doing this. When the sprocket is not positioned correctly, turn the sprocket.

● Install the camshaft lock C-ring ⑤.

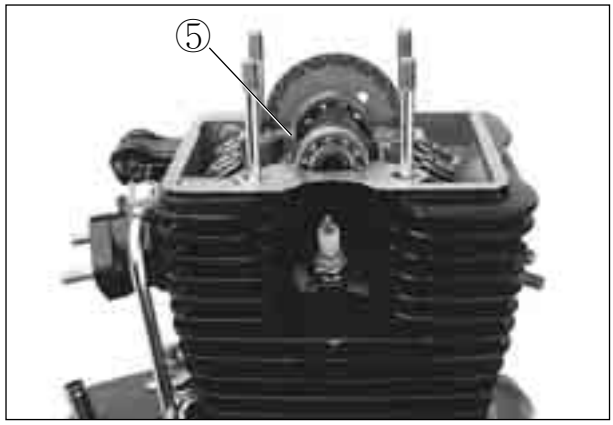

⚠ CAUTION

Align the both end face of C-ring and cylinder head face.

● Apply MOLY PASTE properly to the camshaft bearing and camshaft face.

MOLY PASTE

⦿ CAMSHAFT HOLD

- Apply HYOSUNG MOLY PASTE to the rocker arm shafts ①,then inserting the camshaft hold.
- Install the rocker arm spring ②, rocker arm ③ and inserting the camshaft hold ④.

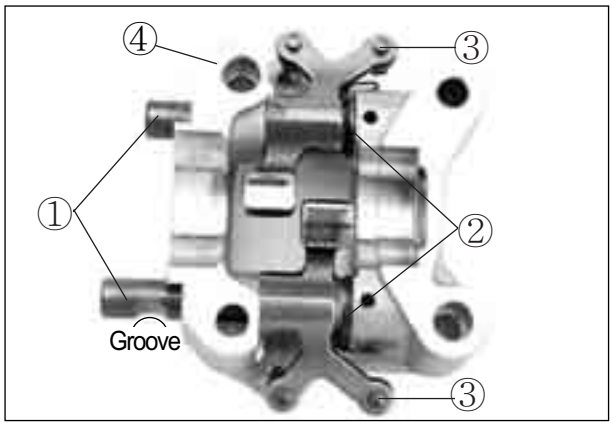

⚠ CAUTION

Pay attention to the exhaust side rocker arm that have not confused, the groove at the intake side rocker arm so that avoid contact with stud bolt.

- Fit the two dowel pins ⑤ to the camshaft holder.

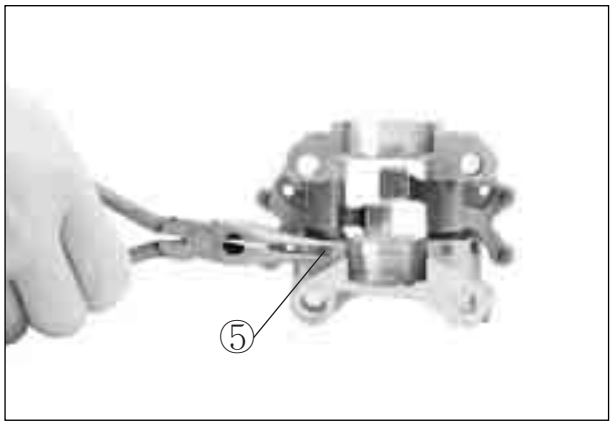

- When fitting rocker arm spring, hook part ⑥ of rocker arm spring onto rocker arm and hook part of rocker arm spring onto the dowel pins ⑦.

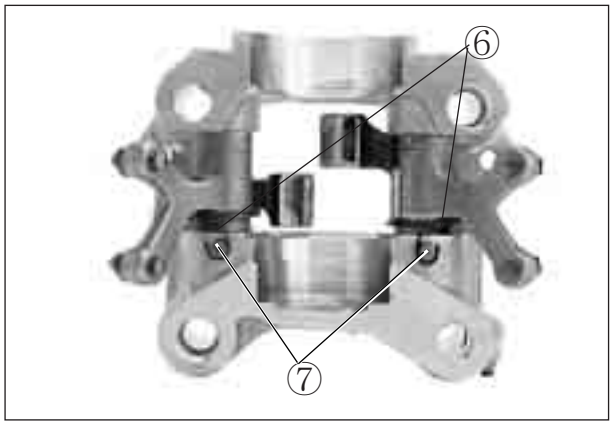

- Fit the two dowel pins and install the camshaft holder ⑧.

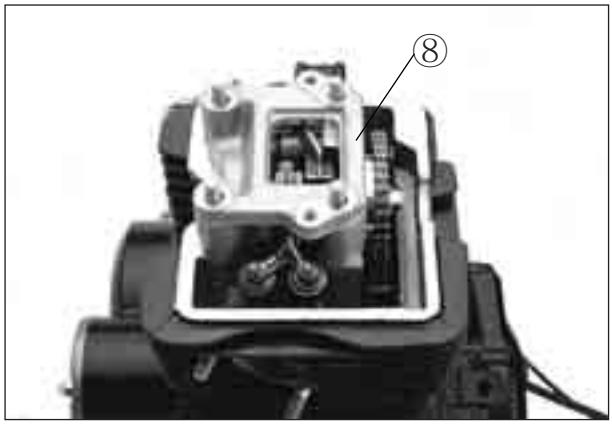

● Tighten the camshaft holder nuts diagonally to the specified.

Camshaft holder nut
: 15~20 N · m (1.5~2.0 kg · m)

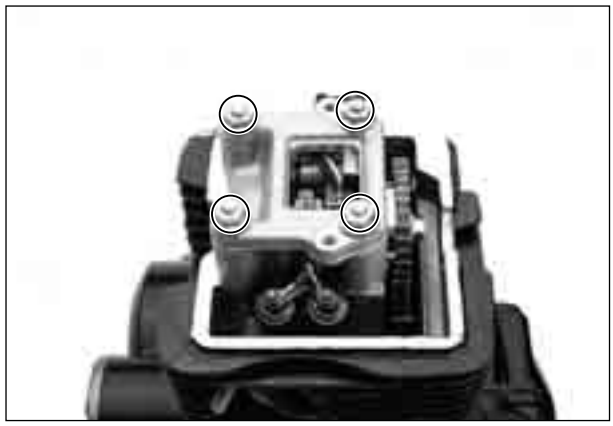

CHAIN TENSIONER

● Mount the tensioner body on the cylinder.

● Install the spring and bolts.

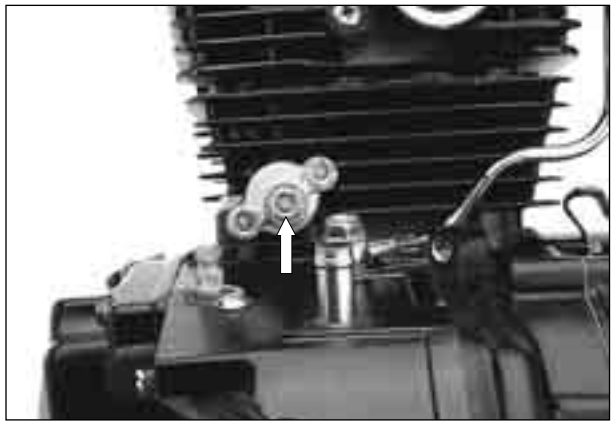

VALVE CLEARANCE

● After tightening the camshaft holder lock nuts, check and adjust the valve clearance.

IN and EX. valve clearance	0.08~0.13 mm (0.0032~0.0051 in)

⚠ CAUTION

Valve clearance is to be checked when the engine is cold.
Both the intake and exhaust valves must be checked and adjusted when the piston is at Top-Dead-Center(TDC) of the compression stroke.

⊙ CYLINDER HEAD COVER

- Clean off oil from the surfaces of cylinder head and cover.
- Fit the packing ② to the cylinder head cover ①.

- Tighten the cylinder head cover bolts with the hexagon wrench.

  Cylinder head cover : 9~10 N · m (0.9~1.0 kg · m)

LEFT ENGINE DISASSEMBLY

- Remove the magneto rotor and key.

  TOOL Rotor remover : 09930-30162
  Rotor remover sliding shaft : 09930-30102

- Remove the starter clutch gear.

- Remove the stator screw by using the impact drive and detach the stator.

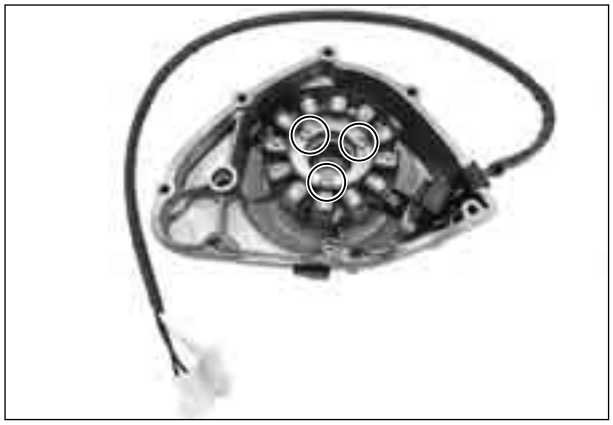

● Remove the roller①, spring ② and push piece ③ from the starter clutch.

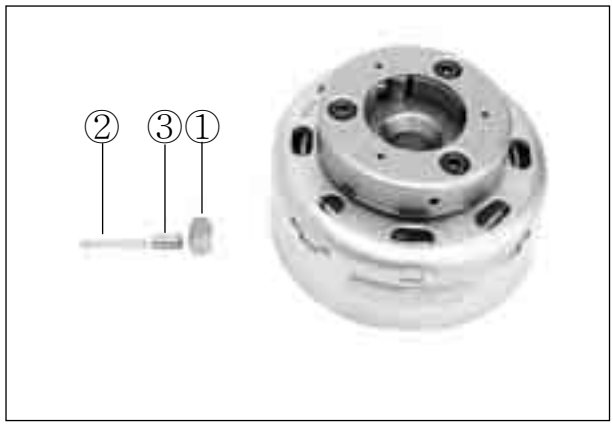

● Clamp the rotor with a vise taking care not to damage it and remove the three bolts using the 5 mm "T" type hexagon wrench.

GEAR POSITION SWITCH

● Remove the gear position indicator switch by removing the screws.

⚠ CAUTION

When removing gear position switch, do not lose the O-ring, switch contact and its spring.

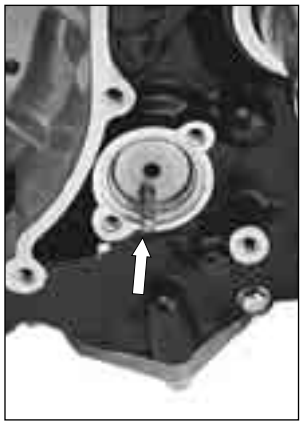

RIGHT ENGINE DISASSEMBLY

ENGINE SPROCKET

● Flatten the lock washer, then remove the sprocket nut.

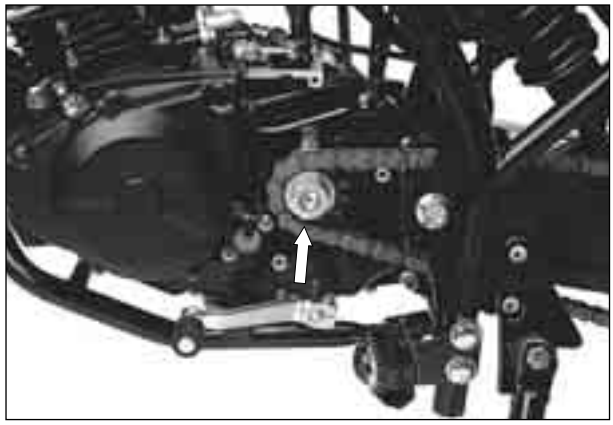

⊙ CLUTCH

● Remove the kick starter by removing the bolt.

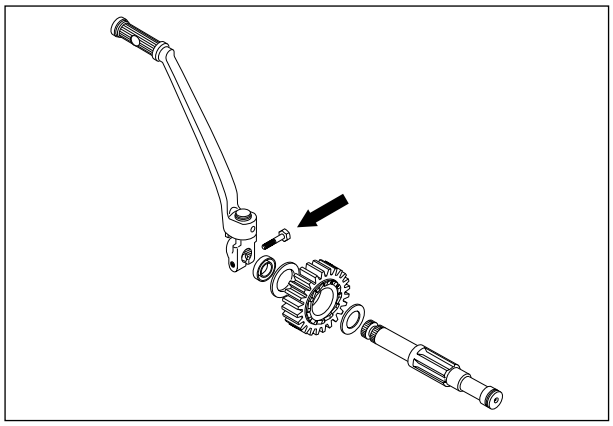

● Remove the clutch cover bolts and oil filter cap bolts, and detach the clutch cover by tapping with a plastic hammer.

● Remove the clutch spring mounting bolts diagonally while holding the primary driven gear, and remove the clutch pressure plate.

● After removal of clutch drive and driven plates, flatten the lock washer and remove the clutch sleeve hub by using the special tool.

TOOL **Clutch sleeve hub holder : 09920-53710**

● Take off the sleeve hub with the primary driven gear assembly.
This time well deposite the washer behind the hub.

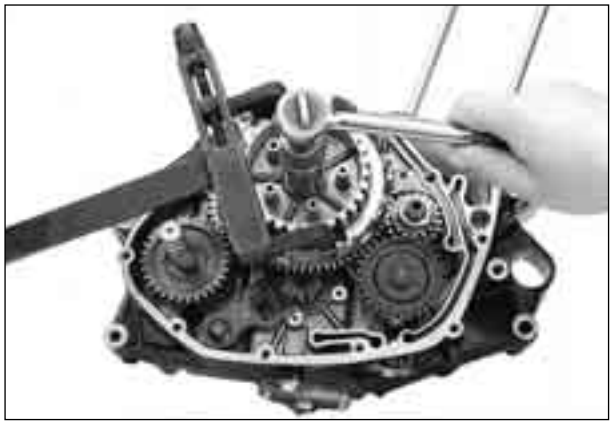

⊙ OIL PUMP DRIVE GEAR, DRIVEN GEAR AND PRIMARY DRIVE GEAR

● Flatten the lock washer, then remove the nut, lock washer and oil pump drive gear.

TOOL **Conrod holder : 09910-20115**

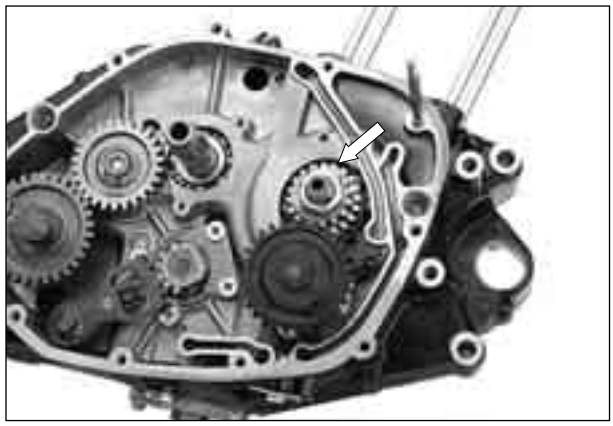

⚠ CAUTION

This is a left-hand thread nut.

● Remove the oil pump driven gear, then remove the primary drive gear and key.

OIL PUMP

● Remove the oil pump mounting screws and take off the oil pump body.

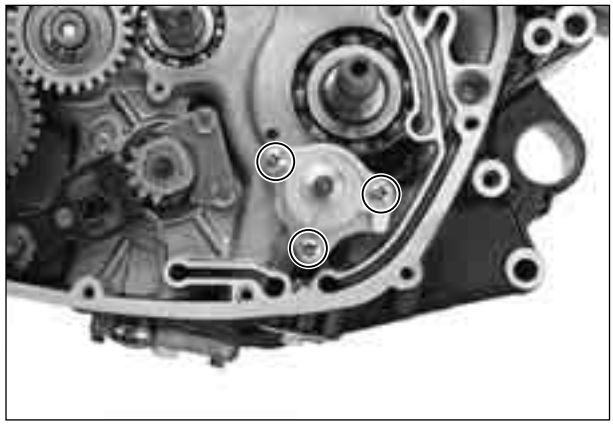

GEAR SHIFTER

● To remove the cam driven gear, first remove the gear shifting shaft, and loosen the pawl lifter and cam guide screws with an impact driver.

⚠ CAUTION

When removing the cam driven gear, do not lose the gear shifting pawl ①, pin ② and spring ③.

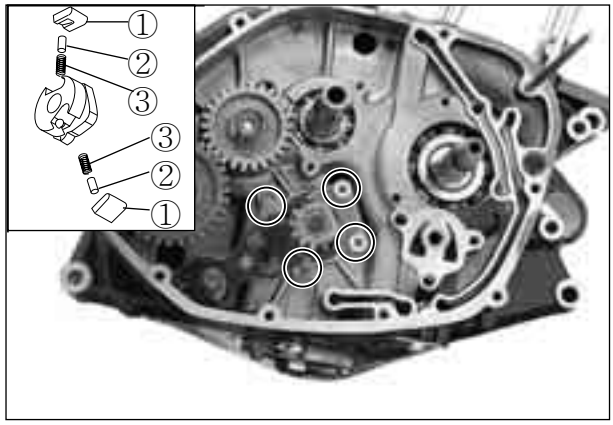

⊙ KICK STARTER DRIVE GEAR AND IDLE GEAR

● Remove the kick starter drive gear and kick starter idle gear.

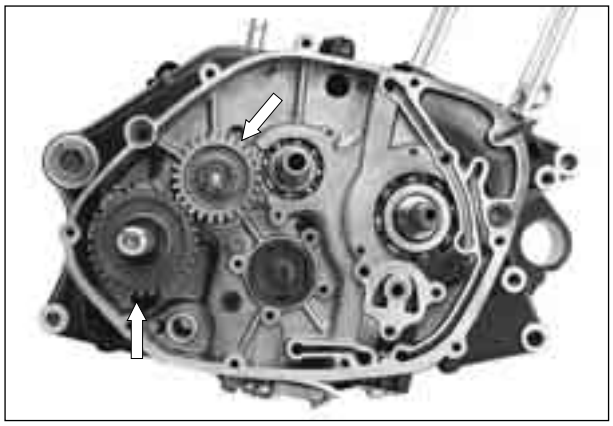

LOW END COMPONENTS DISASSEMBLY

CRANK CASE

● Remove the sump filter cap and cam stopper plug .
● Pull out the spring, neutral stopper.

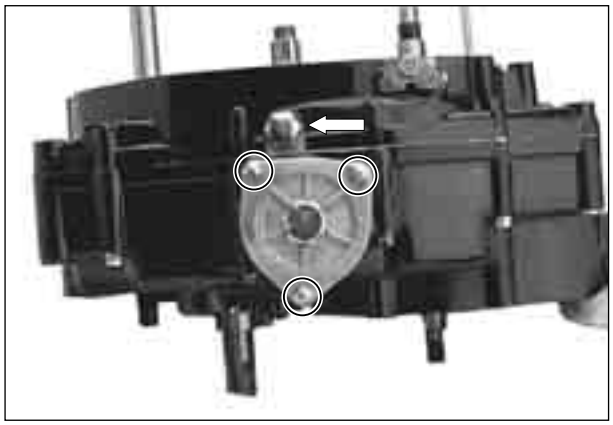

● Remove the sump filter.

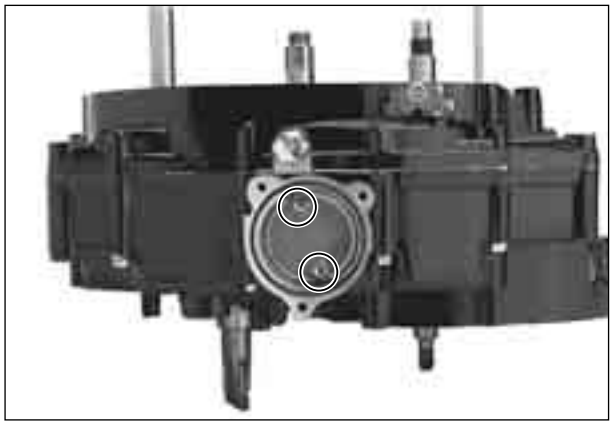

● Remove the crankcase securing bolts.

- Separate the crankcase into 2 part, right and left with the crankcase separater.
- Fit the crankcase separater so that the tool plate is parallel with the end face of the crankcase.

  TOOL Crankcase separater : 09920-13120

⚠ CAUTION

The crankshaft and transmission components must remain in the left crankcase half. This is necessary because the gear shifting cam stopper is mounted on the left crankcase half and will be damaged if the transmission components remain in the right half.

⊙ TRANSMISSION

- Remove the gear shifting cam stopper spring.

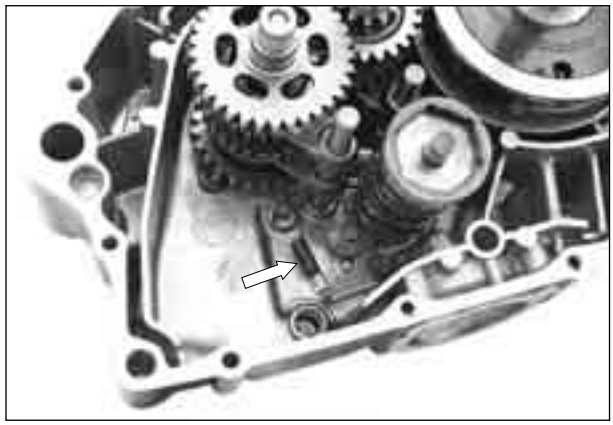

- Draw out the gear shifting fork shafts.

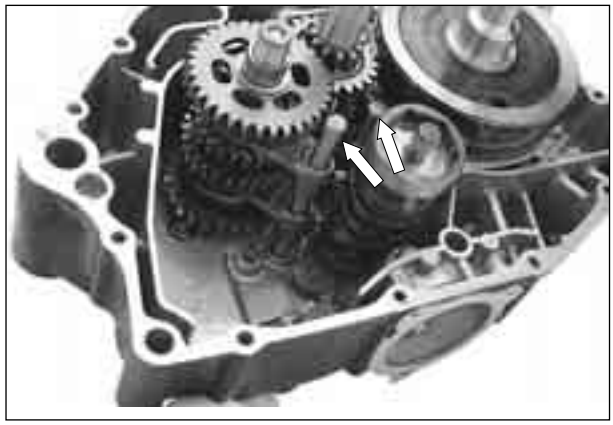

- Take off the forks.
- Remove the clusters of gears and the gear shifting cam.

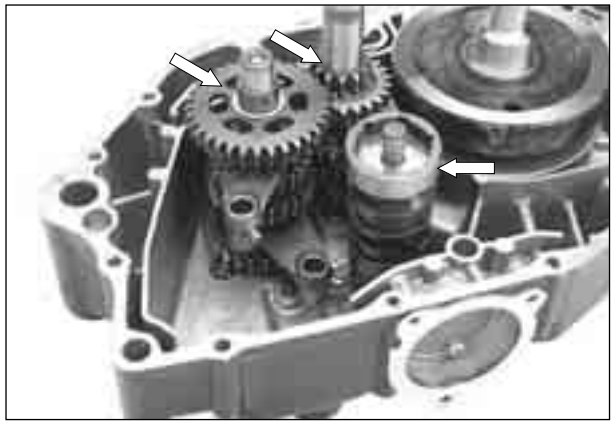

KICK STARTER SHAFT

- Remove the circlip, spring guide and return spring.
- Then, pull out the kick starter shaft from the other side.

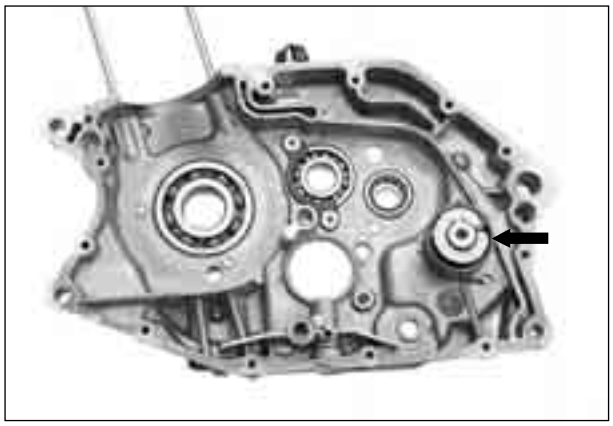

CRANKSHAFT

- Remove the crankshaft by using the crankcase separater.

  TOOL **Crankcase separater : 09920-13120**

OIL SEAL AND BEARING

- Remove the retainer, oil seals and bearings, right and left.

  TOOL **Oil seal remover : 09913-50121**
- Remove the clutch release camshaft.

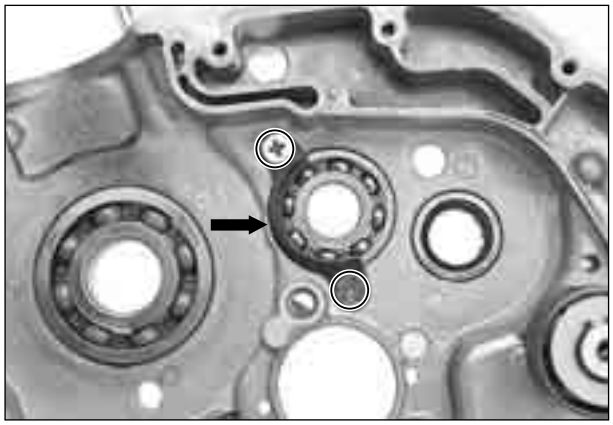

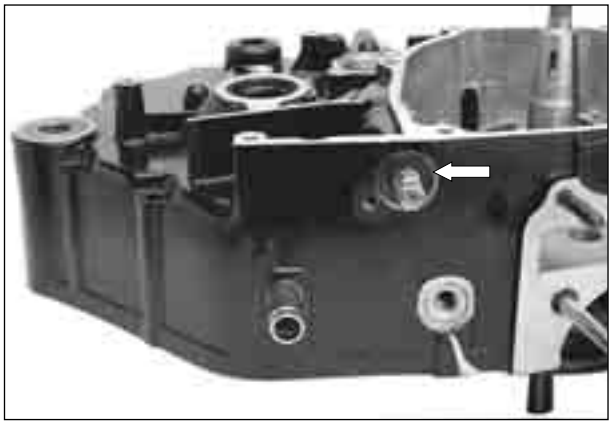

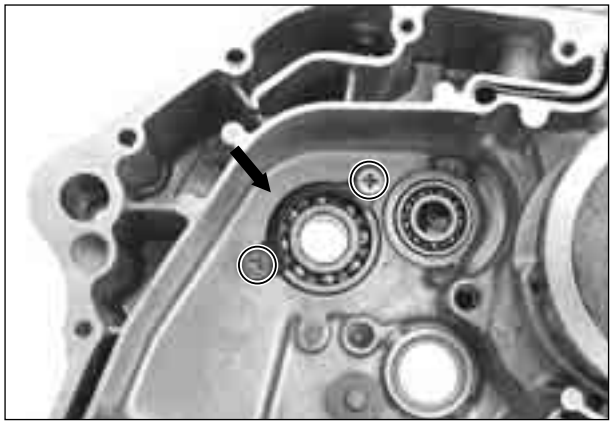

LOWER END COMPONENTS INSPECTION AND SERVICING

⊙ CONROD SMALL END INSIDE DIAMETER INSPECTION

Using a dial calipers, measure the conrod small end inside diameter both in vertical and horizontal directions. If any of the measurements exceeds the service limit, replace the conrod.

	Standard	Service limit
Conrod small end inside diameter	15.006~15.014 mm (0.5908~0.5911 in)	15.040 mm (0.5921 in)

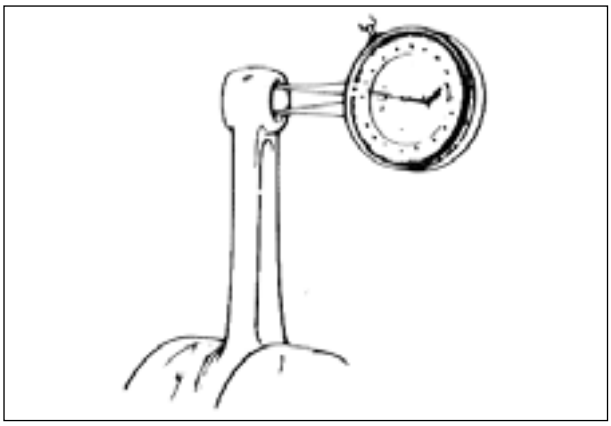

⊙ CONROD DEFLECTION INSPECTION

Move the small end sideways while holding the big end immovable in thrust direction.
Measure the amount of deflection.
Turn the conrod and see if it moves smoothly without play and noise.
This method can check the extent of wear on the parts of the conrod's big end.

	Service limit
Conrod deflection	3.0mm (0.12 in)

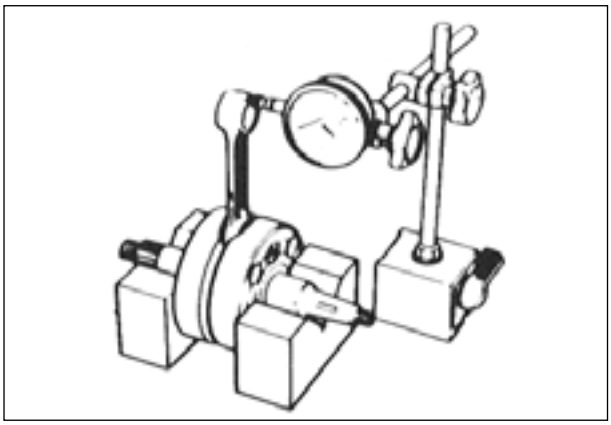

TOOL **Magnetic stand : 09900-20701**
Dial gauge : 09900-20606
V-block : 09900-21304

⊙ CONROD BIG END SIDE CLEARANCE INSPECTION

Using a thickness gauge, measure the side clearance at the conrod big end. If the measurement is out of standard value, measure the conrod big end and the crank pin widths individually to determine which one is to be replaced.

	Standard	Service limit
Conrod big end side clearance	0.10~0.45 mm (0.004~0.018 in)	1.0 mm (0.04 in)

TOOL **Thickness gauge : 09900-20806**

⊙ CRANKSHAFT RUNOUT INSPECTION

With the right and left crank journals supported with V-block, turn the crankshaft slowly. At this time, measure the crankshaft end runout using a dial gauge. If the runout exceeds the service limit, replace the crankshaft.

	Service limit
Crankshaft runout	0.05 mm (0.002 in)

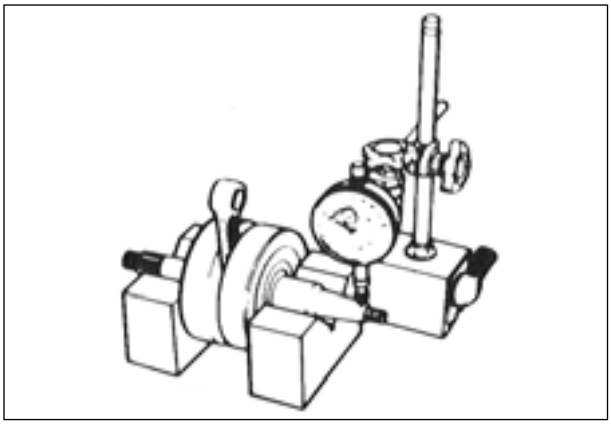

TOOL **Magnetic stand : 09900-20701**
Dial gauge : 09900-20606
V-block : 09900-21304

⦿ CLUTCH DRIVE PLATE

Measure the thickness and claw width of each drive plate with vernier calipers.
Replace the drive plates found to have worn down to the limit.

TOOL **Vernier calipers : 09900-20101**

	Standard
Thickness of clutch drive plate	2.9～3.1 mm (0.1142 - 0.1220 in)

	Serivice limit
Thickness of clutch drive plate	2.6 mm (0.1024 in)

	Standard
Claw width of clutch drive plate	11.8～12.0 mm (0.4646 - 0.4724 in)

	Serivice limit
Claw width of clutch drive plate	11.0 mm (0.4331 in)

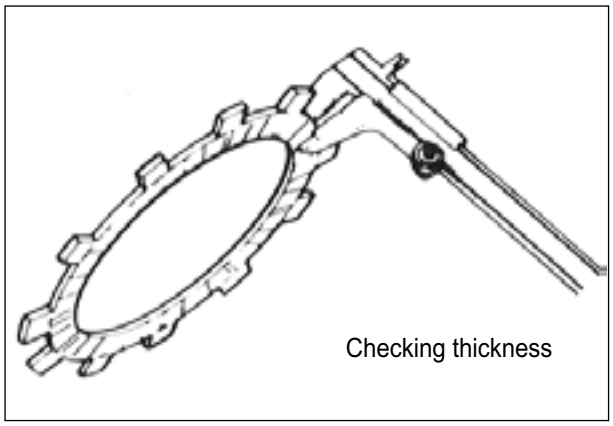
Checking thickness

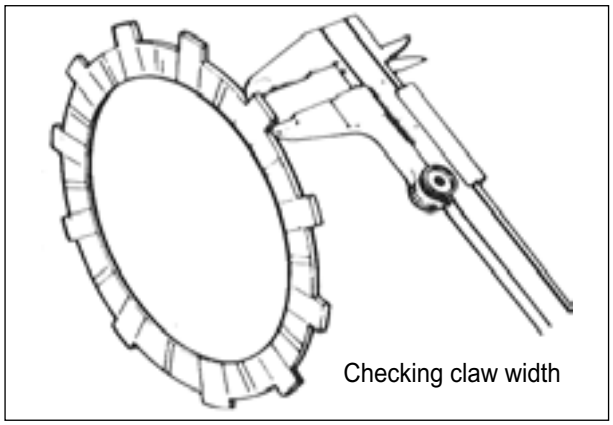
Checking claw width

⦿ CLUTCH DRIVEN PLATE

Measure each of the driven plate for distortion with a thickness gauge. Replace the driven plates which.

TOOL **Thickness gauge : 09900-20806**

	Service limit
Distortion of clutch driven plate	0.1 mm (0.004 in)

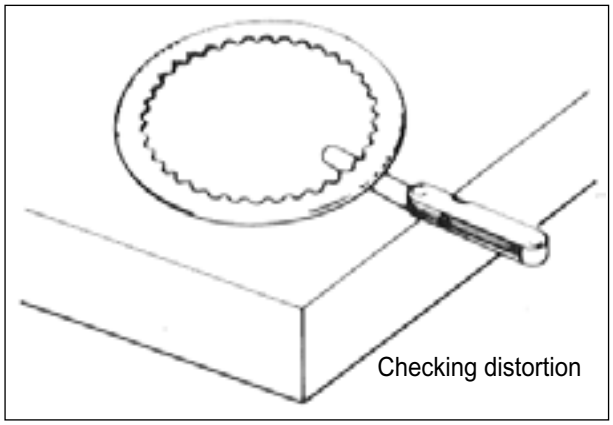
Checking distortion

⦿ CLUTCH SPRING FREE LENGTH

Measure the free length of each coil spring with a vernier calipers, and determine the elastic strength of each. If any one of springs is not within the limit, replace all the springs at a time.

TOOL **Vernier calipers : 09900-20101**

	Serivice limit
Clutch spring free length	29.5 mm (1.16mm)

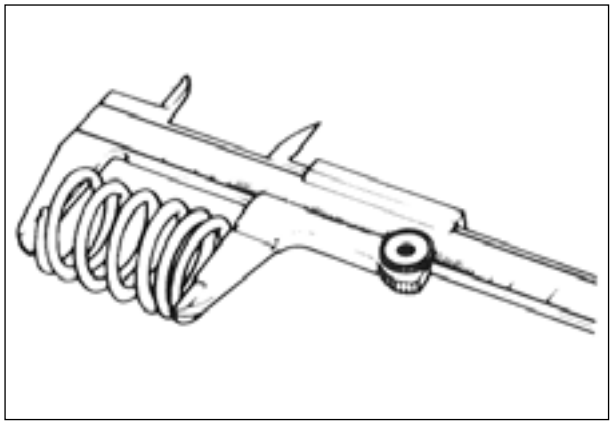

⊙ CLUTCH RELEASE BEARING

Inspect the clutch release bearing for any abnormality, especially cracks. When removing the bearing from the clutch, decide whether it can be reused or if it should be replaced.
Smooth engagement and disengagement of the clutch depends on the condition of this bearing.

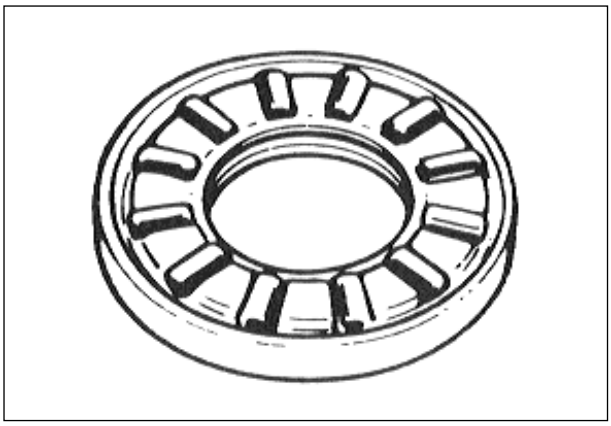

⊙ GEAR-SHIFTING FORK

Using a thickness gauge, check the clearance between in the groove of its gear and shifting fork.
The clearance for each of the three shifting forks plays an important role in the smoothness and positiveness of shifting action.
If the clearance checked is noted to exceed the limit specified, replace the fork or its gear, or both.

TOOL Thickness gauge : 09900-20806
Vernier calipers : 09900-20101

	Standard	Service limit
Shift fork-groove clearance	0.10~0.30 mm (0.004 -.-0.012 in)	0.5 mm (0.20 in)

Shift fork groove width	Standard
NO.1 & NO.2	5.0~5.1 mm (0.197 -..0.201 in)
NO.3	5.0~5.1 mm (0.197 -..0.201 in)

Shift fork thickness	Standard
NO.1 & NO.2	4.8~4.9 mm (0.189 -..0.193 in)
NO.3	4.8~4.9 mm (0.189 -..0.193 in)

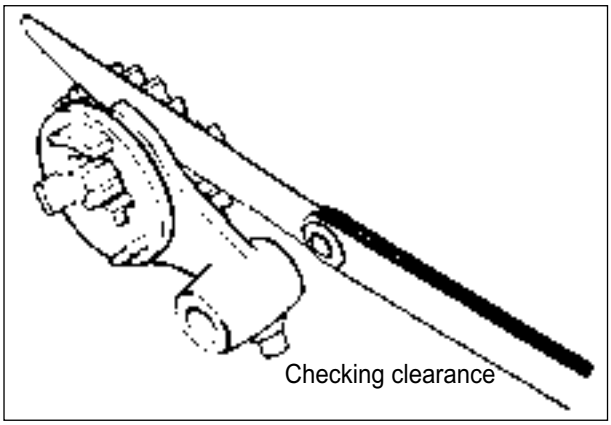
Checking clearance

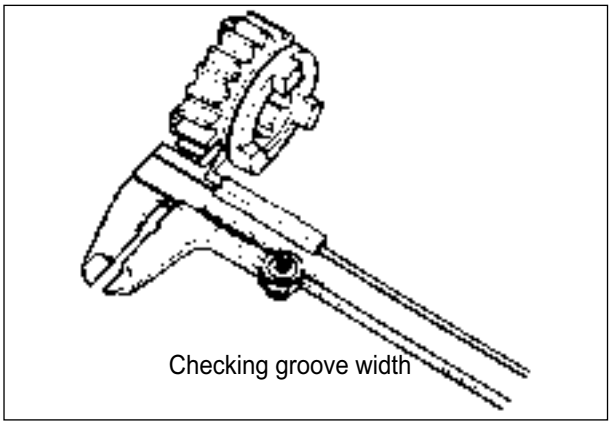
Checking groove width

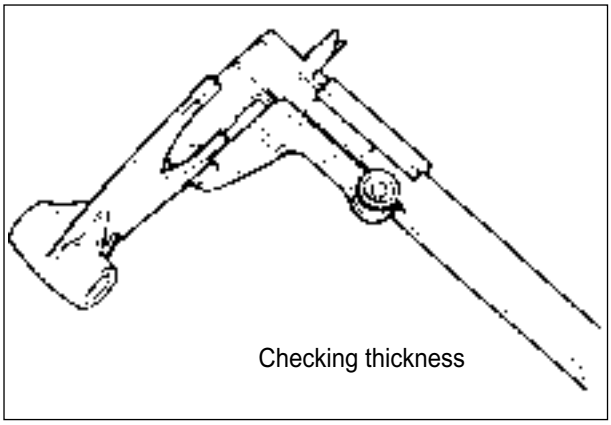
Checking thickness

⦿ PRIMARY DRIVEN GEAR

Inspect the primary driven gear bearing for any damage. If any abnormal condition are found, replace the primary driven gear.

⦿ CAM CHAIN 20-PITCH LENGTH

Pull the chain tight to remove any slack, then using vernier caliper, measure the 20-pitch (21 pins) length of cam chain. If it measures than the limits, replace the cam chain.

Cam chain 20-pitch length	Service limit
	129.9 mm (5.11 in)

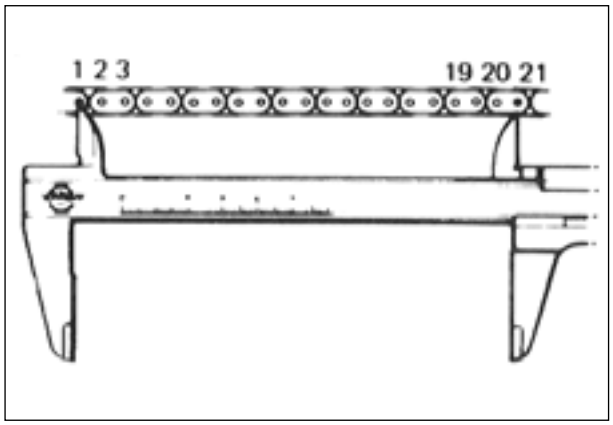

⦿ CRANKCASE

■ BEARING INSPECTION

Rotate the bearing inner race by finger to inspect for abnormal play, noise and smooth rotation while the bearings are in the crankcase.
Replace the bearing in the following procedure if there is anything unusual.

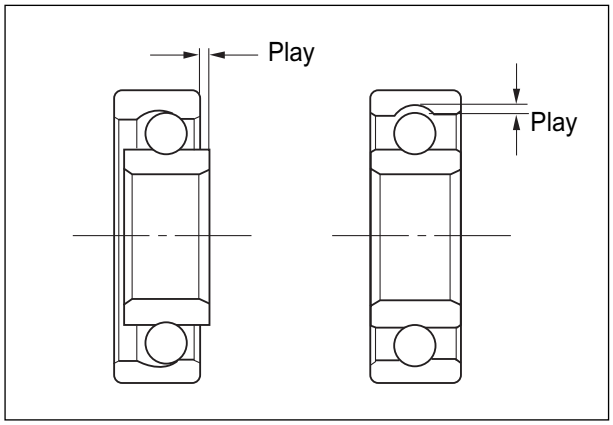

⦿ STARTER CLUTCH BEARING

Inspect the bearing for any abnormality, particularly cracks, to decide whether it can reused or should be replaced.

LOWER END COMPONENTS REASSEMBLY

⊙ CRANKSHAFT

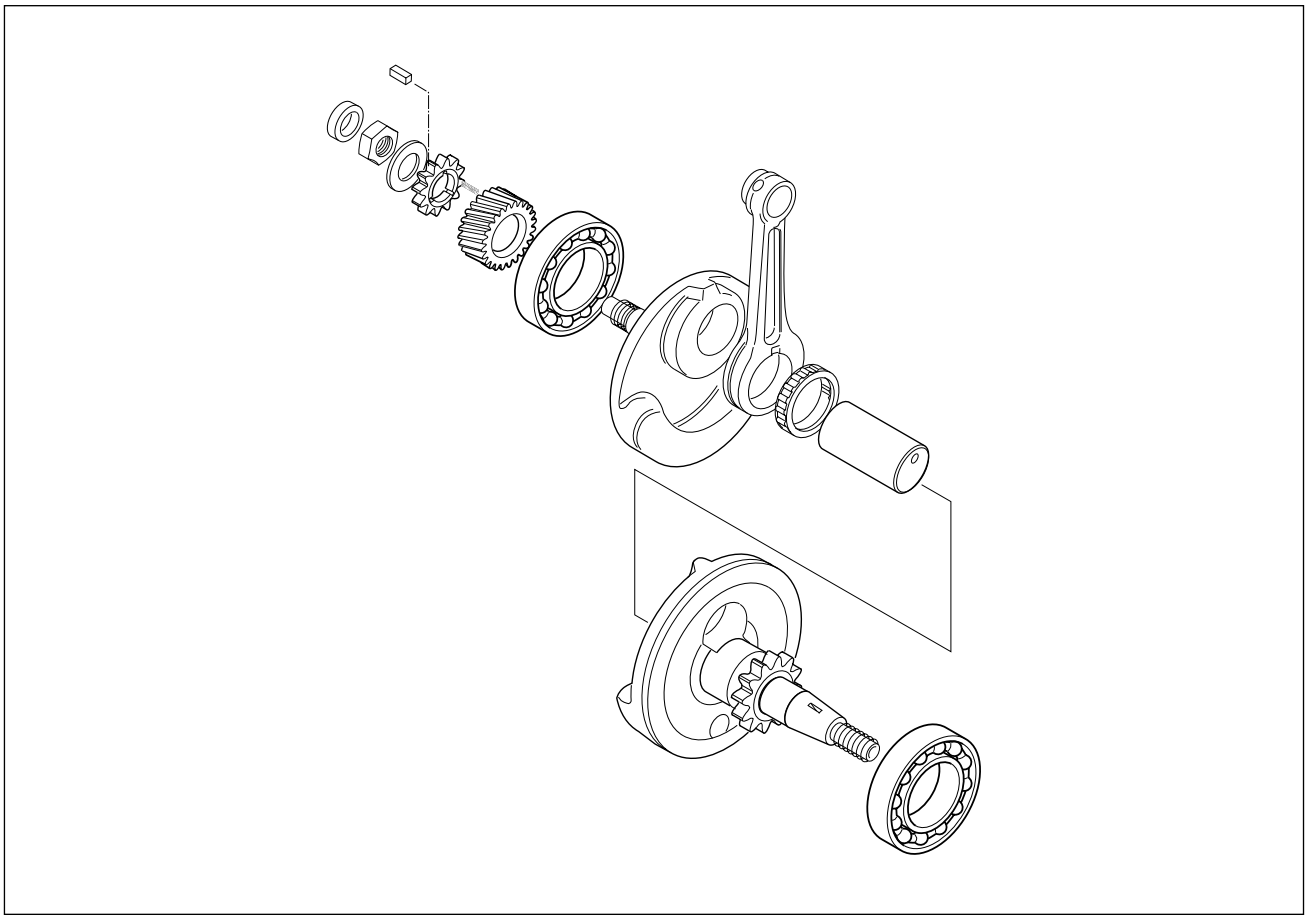

● Inspect the between the webs referring to the below figure when rebuilding the crankshaft.

	Standard
Width between webs	53.0±0.1mm (2.087±0.004 in)

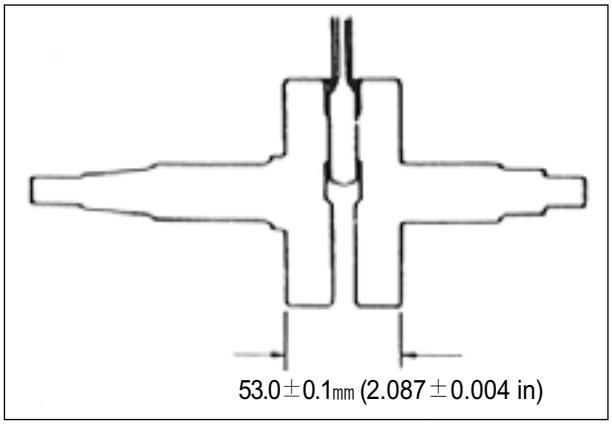

● When mounting the crankshaft in the crankcase, it is necessary to pull its left end into the crankcase.

TOOL Crankcase installer : 09910-32812
Conrod holder : 09910-20115

⚠ CAUTION

Never fit the crankshaft into the crankcase by striking it with a plastic hammer.
Always use the special tool, otherwise crankshaft alignment accuracy will be affected.

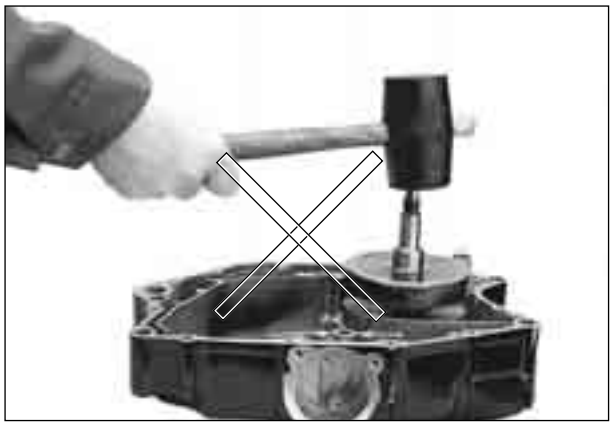

⊙ TRANSMISSION

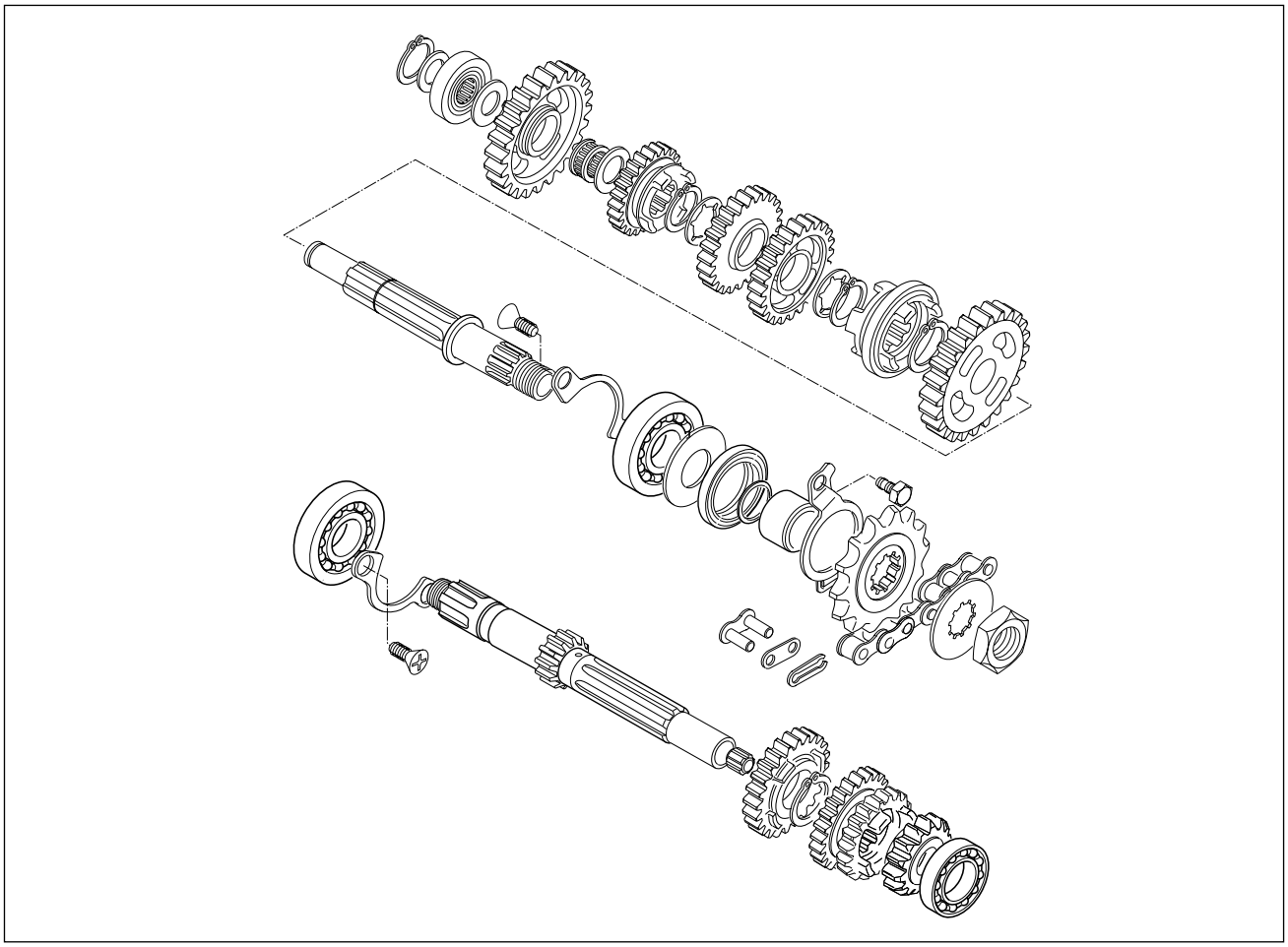

⚠ CAUTION

- **Never reuse a circlip. After a circlip has been removed from a shaft, it should be discarded and a new circlip must be installed.**
- **When installing a new circlip, care must be taken not to expand the end gap larger than required to slip the circlip cover the shaft.**
- **After installing a circlip, always insure that it is completely seated in its groove and securely fitted.**

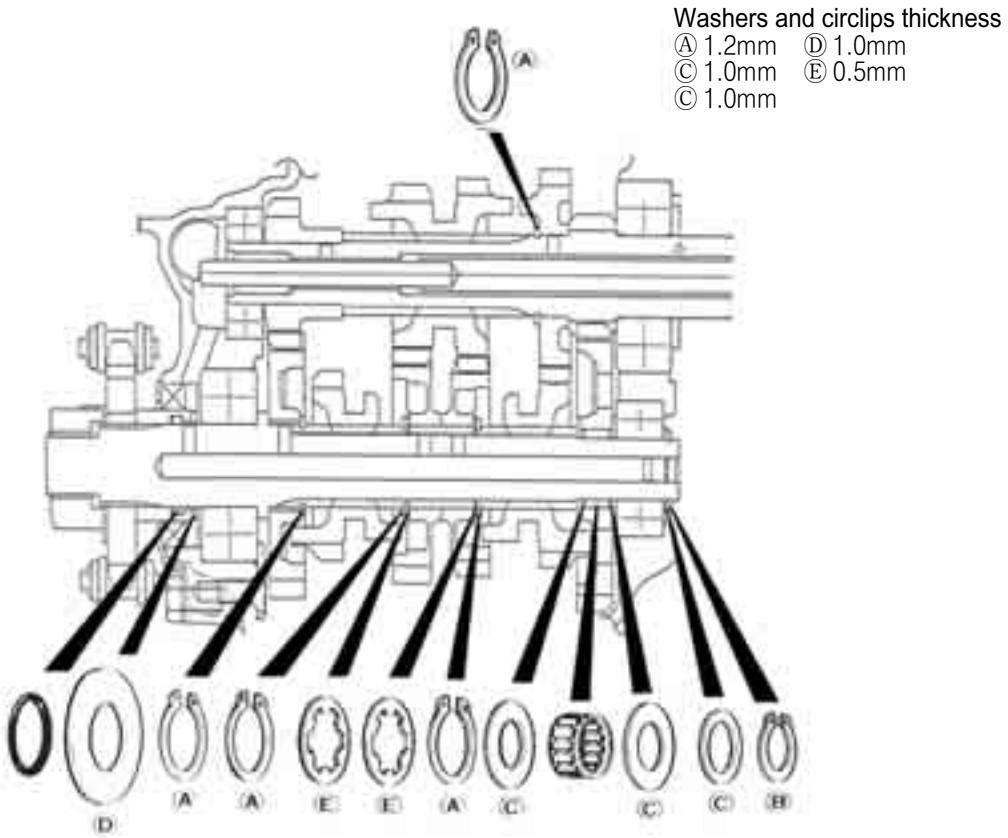

NOTE

When reassembling the bearing retainer, apply a small quantity of THREAD LOCK "1324" to the threaded parts of the bearing retainer screws.
In reassembling the transmission, attention must be given to the locations and positions of washers and circlips. The cross sectional view given here will serve as a referance for correctly mounting the gears, washers and circlips.

⊙ COUNTERSHAFT

■ **Mounting 2nd drive gear**

● Press-fit 2nd drive gear into the countershaft.
Before reassembling, coat the internal face of the 2nd drive gear with THREAD LOCK "1324" and install it so that the length Ⓐ is as shown in Fig.

Thread Lock "1324"

Countshaft length Ⓐ (Low to 2nd)	$88.0^{+0.1}_{-0.2}$ mm $\left(3.465^{+0.004}_{-0.008}\ \text{in}\right)$

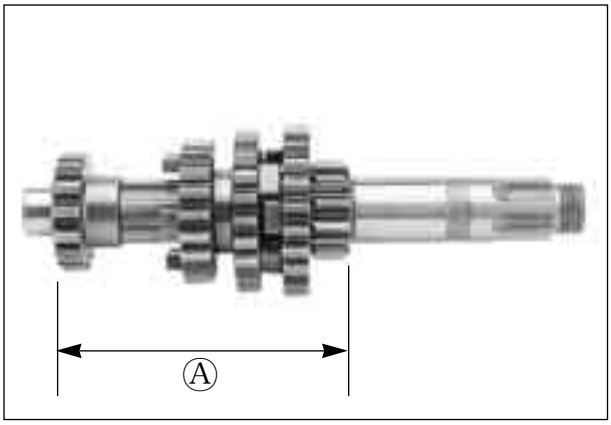

⚠ CAUTION

This procedure may be performed only twice before shaft replacement is required.

⊙ GEAR SHIFTING CAM AND FORK

● Fit the gear shifting cam on the crankcase.
Position the cam as shown in Fig. So that the gear shifting fork can be installed easily.

⚠ CAUTION

Two kinds of the gear shifting forks, ① and ②, are used. They resembles each other very closely in external appearance and configuration. Carefully examine the illustration for correct installing positions and directions.

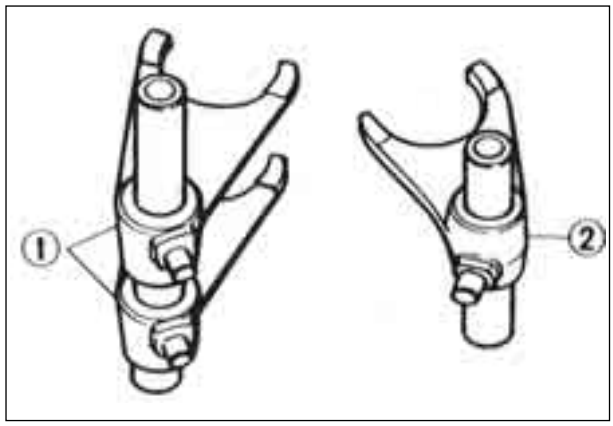

● After the cam stopper and gear shifting forks have been fitted, hook the cam stopper spring into the crankcase.

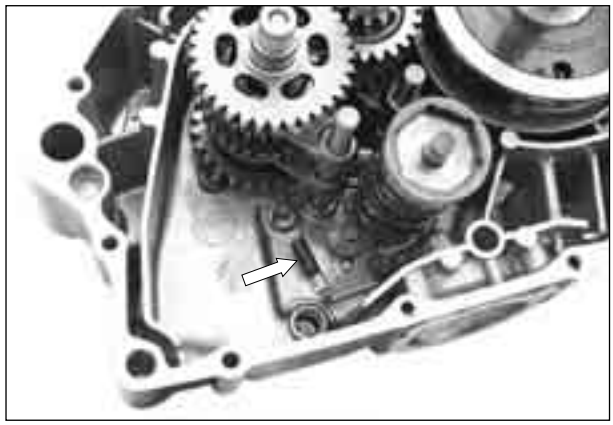

⊙ KICK STARTER

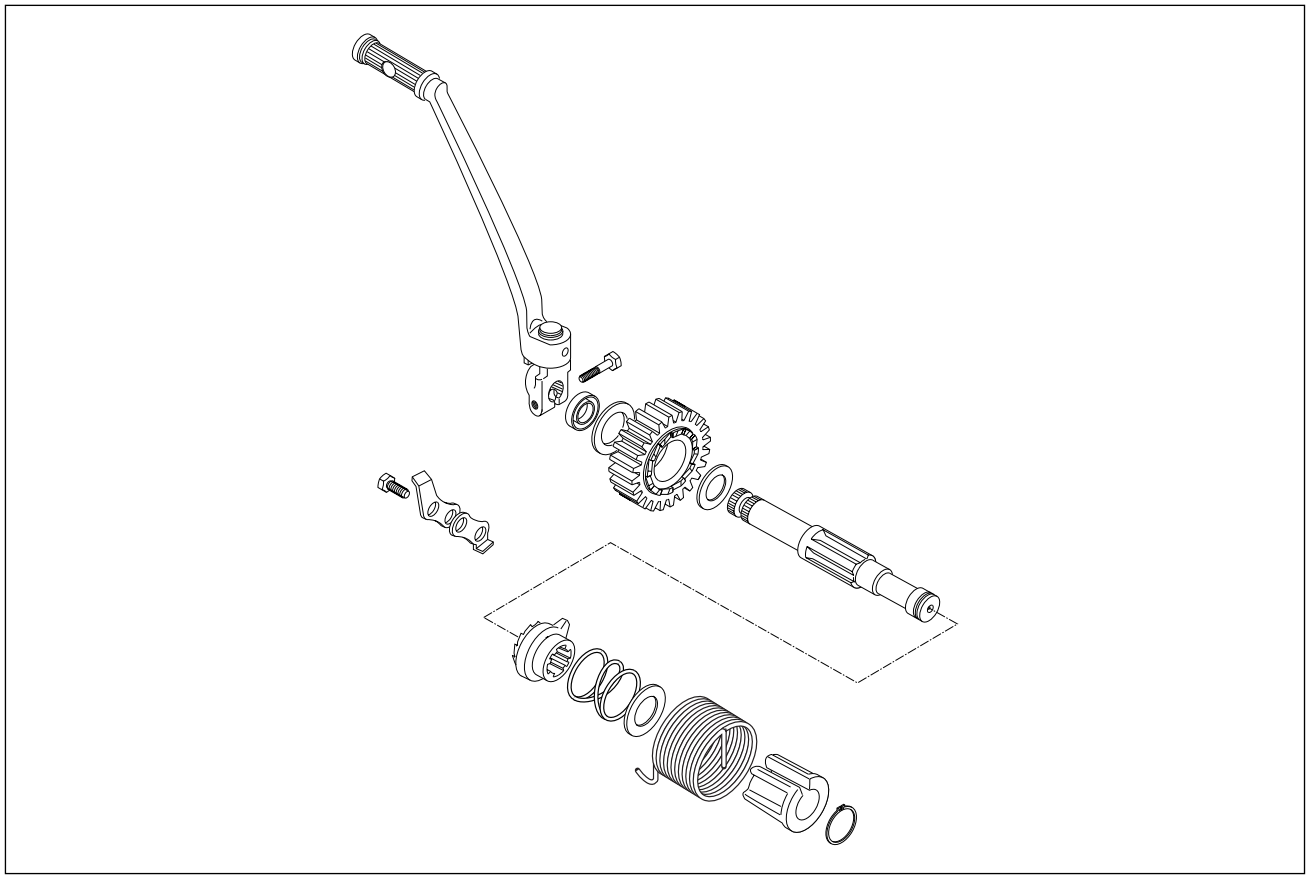

● When fitting the kick starter to the shaft, be sure to align the punched marks..

● Fit the spring and washer on the shaft. Then, insert the kick starter shaft into the crankcase. Engage the pawl ② of kick starter guide ①.

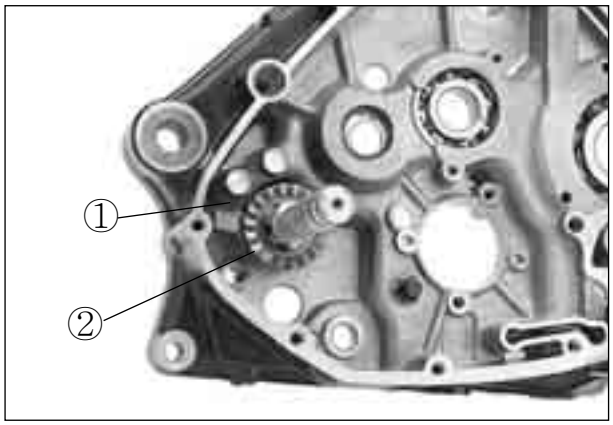

● When fitting the kick return spring, hook the part ③ of return spring into the crankcase, turn it 1/2 a turn clockwise with the pliers and fit the part ④ of return spring into hole of the kick shaft. Then, fit the spring guide and circlip.

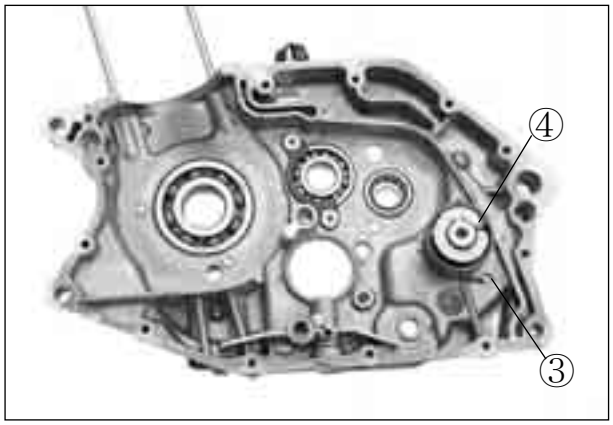

⊙ CRANKCASE

When reassembling the crankcase pay attention to the following.

● Coat SUPER GREASE "A" to the lip of oil seals.
SUPER GREASE "A"

● Remove sealant material on the fitting surface of right and left halves of the crankcase and thoroughly remove oil stains.

● Fit the dowel pins on the half.

● Apply engine oil to the big end of the crankshaft con-rod and all parts of the transmission gears.

● Apply BOND "1215" uniformly to the fitting surface of the left half of the crankcase, and after waiting a few minutes, fit the right half on the left half.
BOND "1215"

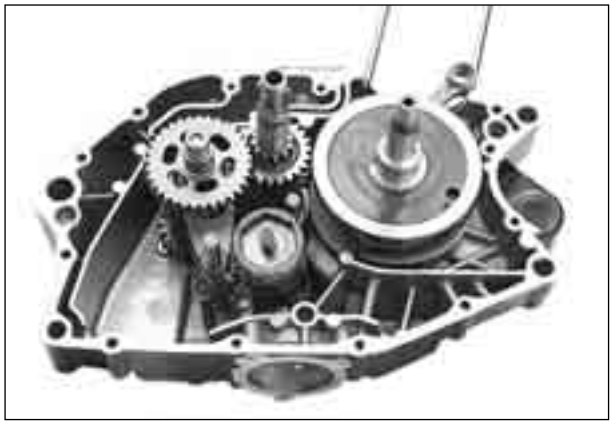

● After the crankcase bolts have been tightened, check if the driveshaft and countershaft rotate smoothly.

● If a large resistance is felt to rotation, try to free the shafts by tapping the driveshaft or countershaft with a plastic hammer as shown in Fig.

RIGHT ENGINE REASSEMBLY

KICK START DRIVE GEAR AND IDLE GEAR

● Install the kick starter idle gear and drive gear.

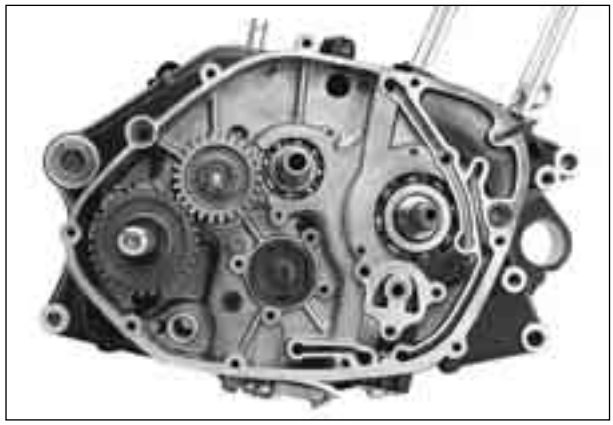

GEAR SHIFTING CAM DRIVEN GEAR

When installing the gear shifting pawls into the cam driven gear. The large shoulder Ⓐ must face to the outside as shown.

● Next, install cam guide and pawl lifter. Apply a samll quantity of THREAD LOCK "1324" to the threaded parts of the securing screws.

Thread Lock "1324"

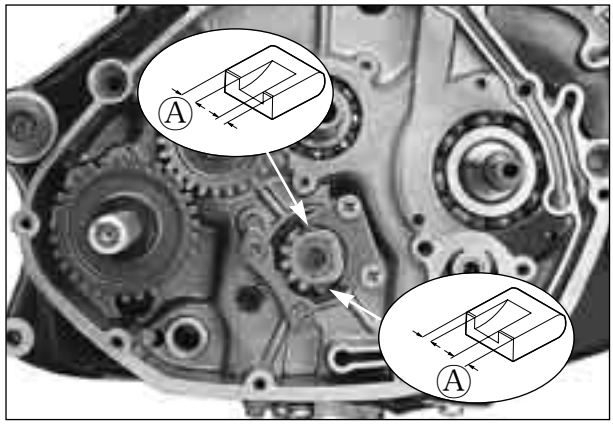

⊙ GAER SHIFTING SHAFT

Install the gear shifting shaft. Match the center teeth of the gear on the shifting shaft with the center teeth on the shifting driven gear as shown.

⚠ CAUTION

After the cam driven gear, cam guide, gear shifting shaft and neutral cam stopper have been fitted, confirm that gear change is normal while turning, the countshaft and driveshaft. If gear change is not obtained, it means that assembly of gears or installation of gear shifting fork is incorrect. If this is the case, disassemble and trace the mistake.

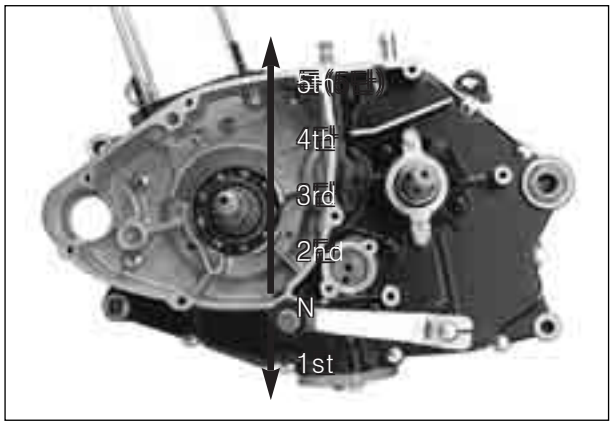

⊙ PRIMARY DRIVE GEAR AND OIL PUMP

- Fit the key in the slot on the crankshaft, and install the primary drive gear.

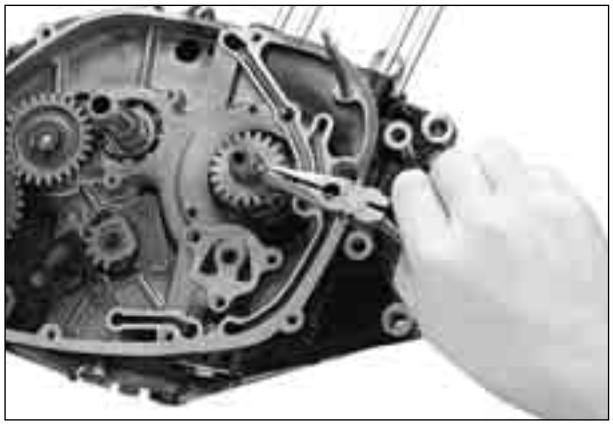

- Before mounting the oil pump, apply engine oil to the sliding surfaces of the case, outer rotor, inner rotor and shaft.
- Apply a small quantity of THREAD LOCK "1324" to the threaded parts of oil pump mounting screws.

  Thread Lock "1324"
- Tightening the oil pump mounting screws.

● Fit the oil pump driven gear and install the circlip

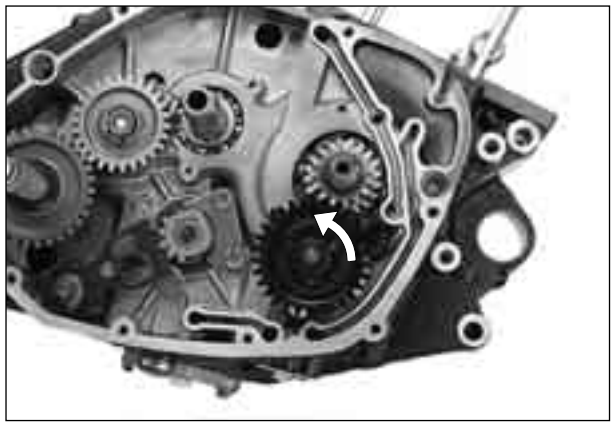

⚠ CAUTION

After mounting the oil pump in the crankcase, rotate the pump gear by hand to see if it turns smoothy.

● After checking the oil pump, install the oil pump drive gear, lock washer and nut, tighten it with a torque wrench to the specified torque and bend up to the washer.

TOOL Conrod holder : 09910-20115

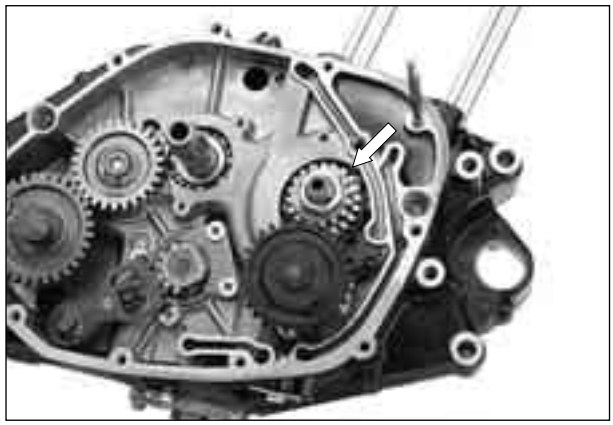

⚠ CAUTION

This is a left-hand thread nut.

Oil pump drive gear nut
: 40~60 N · m (4.0~6.0 kg · m)

⊙ CLUTCH

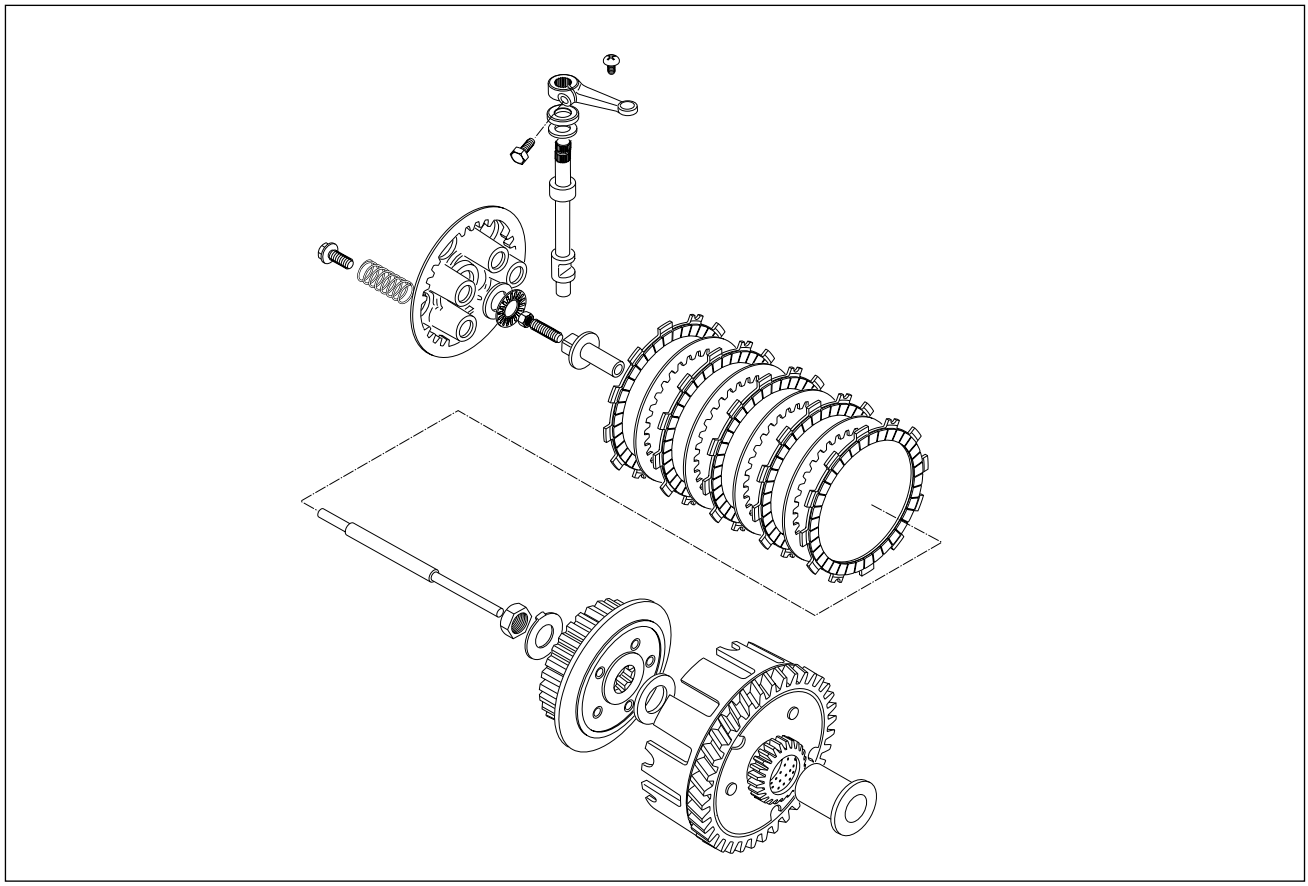

- Install the clutch camshaft by positioning the face to right side.
- Install the oill seal by using the 17 mm socket.

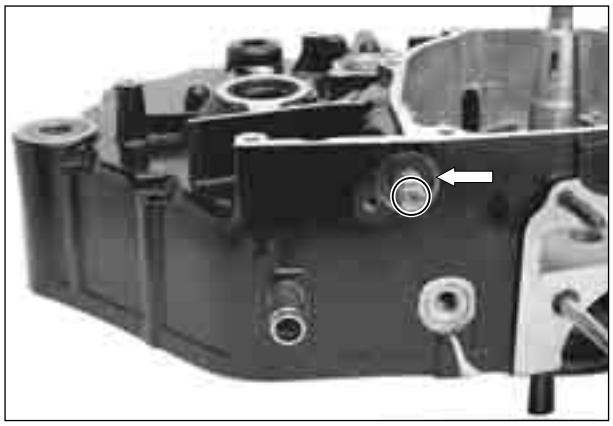

- Tighten the oil seal retainer screw.

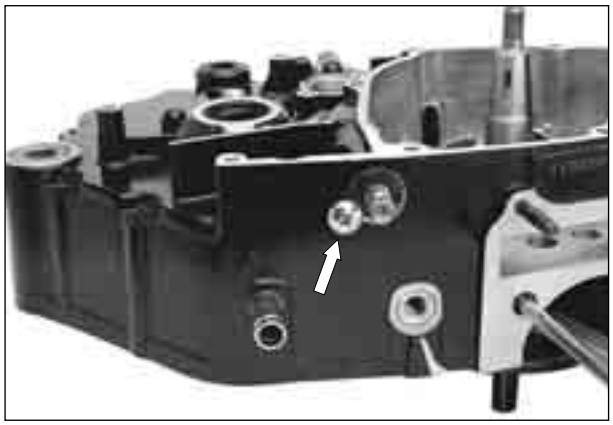

Assemble the clutch, in the reverse order of disassembly. Pay attention to the following points.

- When inserting the spacer on the countershaft, apply a small quantity of engine oil to both inside and outside of the spacer.
- Tighten clutch sleeve hub nut using the special tool to the specified torque.

  TOOL Clutch sleeve hub holder : 09920-53710

  Clutch sleeve hub nut : 30~50 N · m (3.0~5.0 kg · m)

- Be sure to lock the nut by firmly bending the tongue of the washer.
- Install the drive plates and driven plates to the sleeve hub.
- Insert push rod in the countshaft.

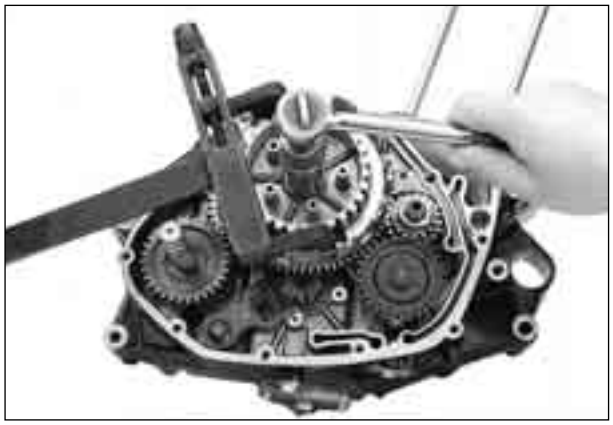

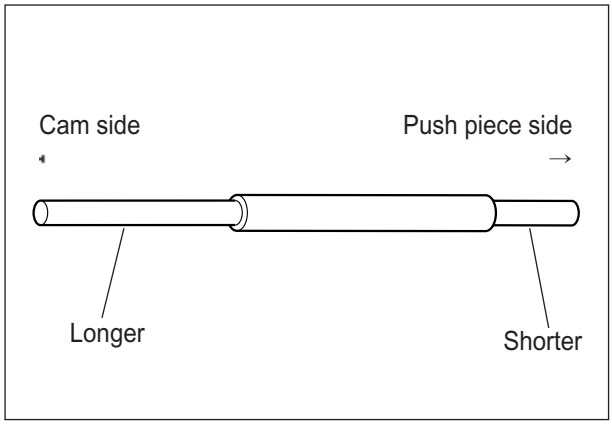

● Tighten the clutch spring bolts diagonally.

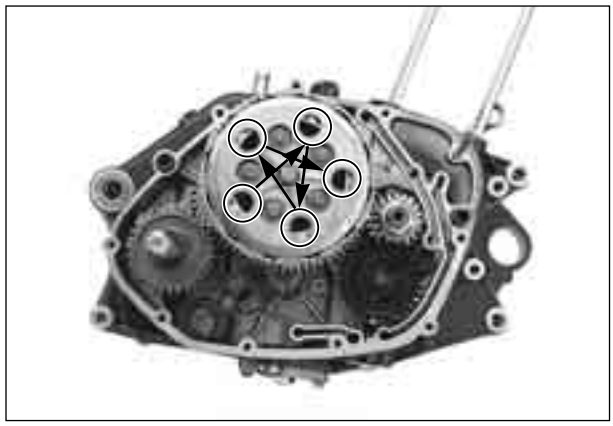

Clutch release screw adjustment

● Loosen the lock nut, and turn in the release screw to feel high resistance.
● From that position, turn out the release screw 1/4-1/2 turn, and tighten the lock nut.

Clutch cover bolt
: 8~12N · m (0.8~1.2kg · m)

Oil filter cap bolt
: 8~12N · m (0.8~1.2kg · m)

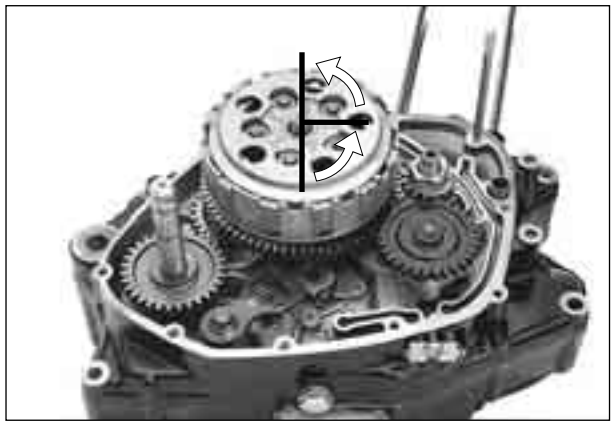

ENGINE OIL STRAINER

● Wash the oil strainer with cleaning solvent, and then bolw compressed air through it to dry off solvent.
● After mounting the oil strainer, fit the cap and tighten it.

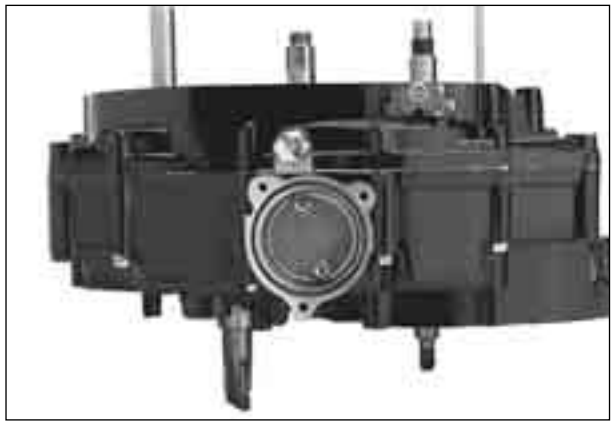

LEFT ENGINE REASSEMBLY

NEUTRAL CAM STOPPER

● Put in the neutral stopper and spring.
● Tighten the cam stopper plug.

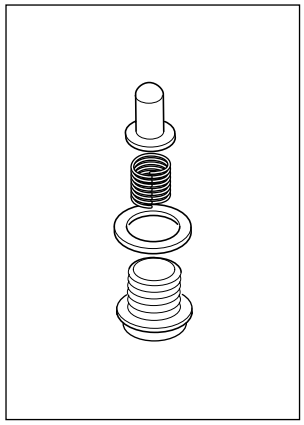

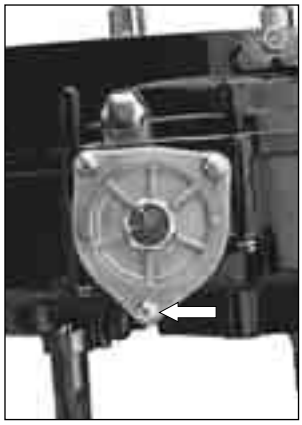

⊙ STATOR

- Apply a small quantity of THREAD LOCK "1324" to the threaded parts of screws.

  Thread Lock "1324"

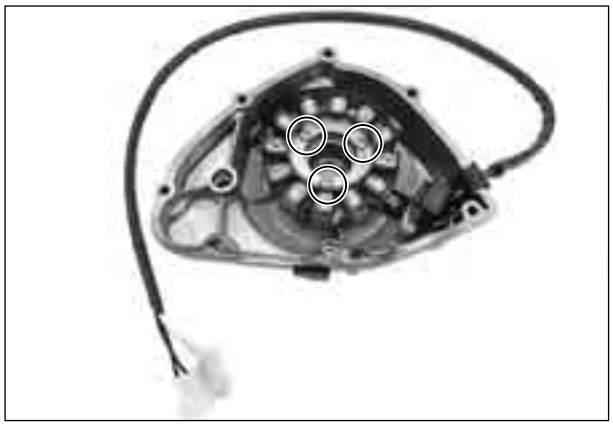

STARTER CLUTCH

- Locate the shim ① to the proper position

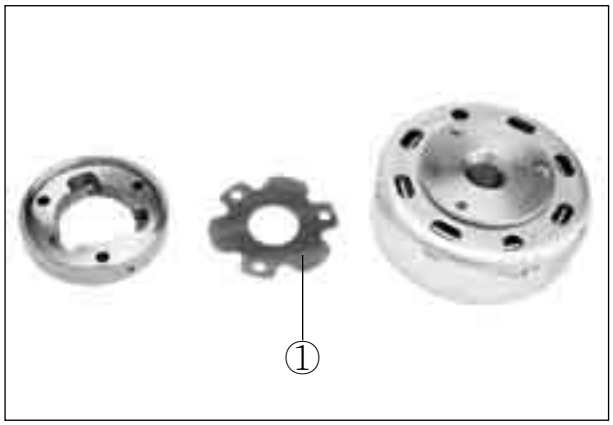

- Install the roller, spring and push piece to the starter clutch.
- Apply THREAD LOCK "1324" to the bolts and tighten with the specified torque.

  Thread Lock "1324"

  Starter clutch bolt

  : 15~20 N · m (1.5~2.0 kg · m)

⊙ MAGNETO ROTOR

- Fit the key in the key slot on the crankshaft.
- Install the magneto rotor.
- Apply a small quantity of THREAD LOCK "1324" to the threaded parts of crankshaft.

  Thread Lock "1324"

● Tighten the magneto rotor nut to the specified torque.

Thread Lock "1324"
Rotor holder : 09930-40113
Rotor holder : 09930-44511
Magneto rotor nut
: 30~40 N・m (3.0~4.0 kg・m)

STARTER IDLE GEAR AND MOTOR

● Install the starter idle gear.

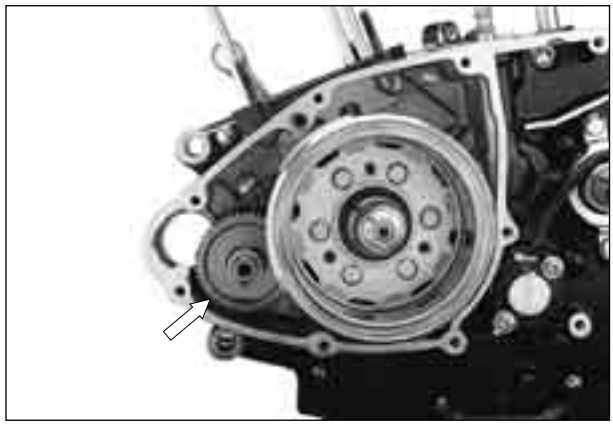

● Install the starter motor.

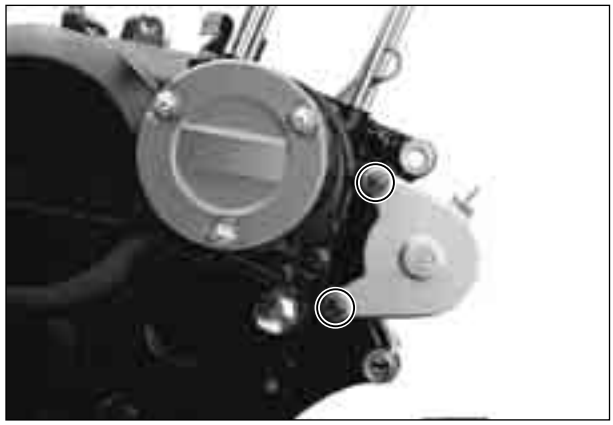

DRIVESHAFT OIL SEAL AND ENGINE SPROCKET

⚠ CAUTION

- **Always replace the driveshaft oil seal with a new one every disassembly to prevent oil leakage. Also grease the oil seal lip.**
  On installation, refer to Fig, for correct position and direction.
- **Replace O-ring with a new one every disassembly.**

⚠ CAUTION

After reassembling the LOWER END COMPONENTS, install the O-ring and spacer.

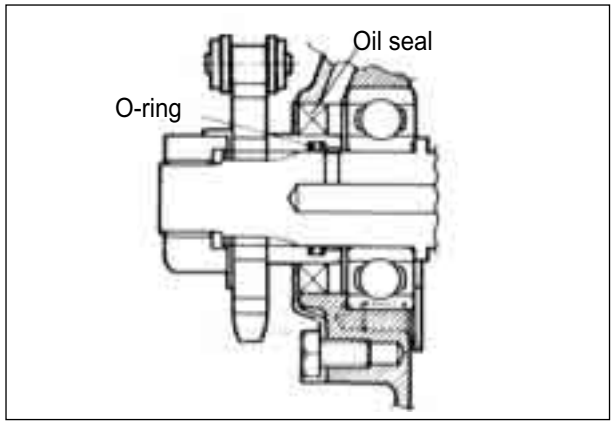

● Tighten the engine sprocket nut to the specified torque and bend up the washer.

Rotor holder : 09930-40113
Engine sprocket nut
: 80~100 N · m (8.0~10.0 kg · m)

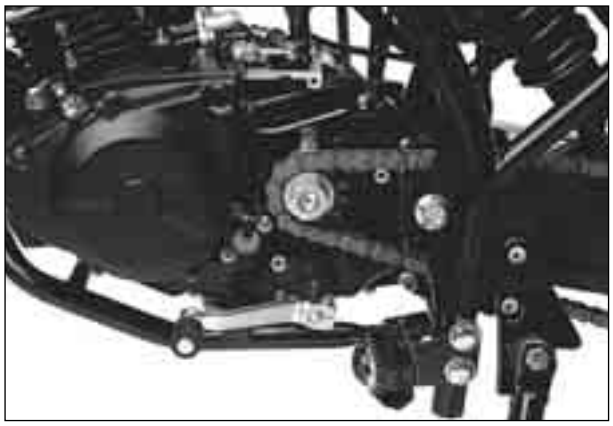

GEAR POSITION SWITCH

● Install the gear position switch.

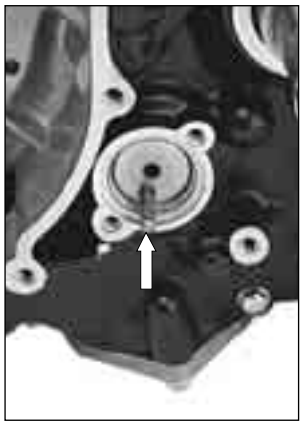

FUEL SYSTEM

CONTENTS

FUEL COCK 4-1

REMOVAL 4-1

CLEANING 4-1

REMOUNTING 4-1

CARBURETOR 4-2

THROTTLE VALVE 4-3

CARBURETOR 4-4

FUEL COCK

⊙ REMOVAL

- Turn the fuel cock to "OFF" position and disconnect the fuel hose ① from the fuel cock.
- Place a clean oil pan under the fuel cock assembly, turn the fuel cock to "RES" position and drain the fuel.

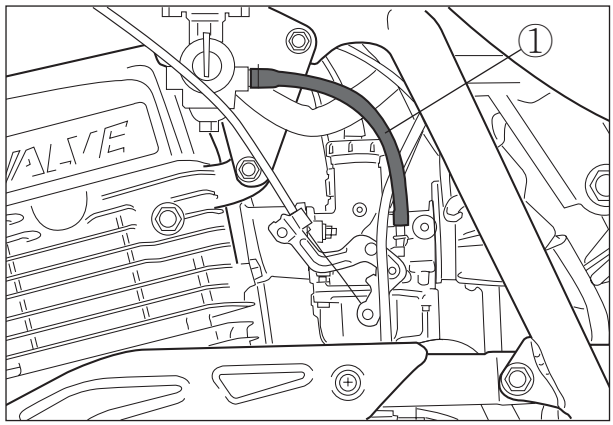

⚠ WARNING

Gasoline is very explosive. Extreme care must be taken.

- Unscrew bolts of fuel cock and take off the fuel cock assembly.

⊙ CLEANING

If the fuel filter is dirty with sediment or rust, fuel will not flow smoothly and loss in engine power may result. Clean the fuel filter with compressed air. Also check the fuel cock for cracks.

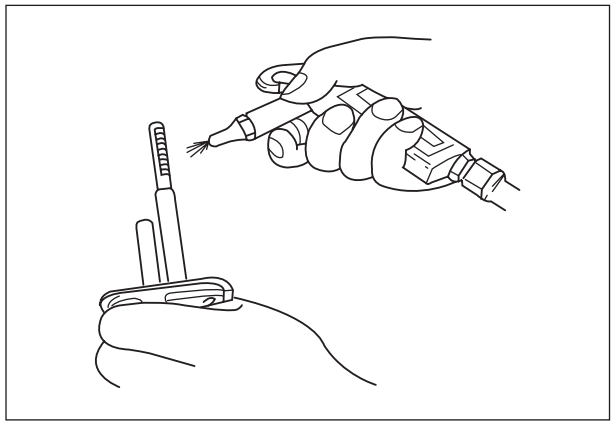

⊙ REMOUNTING

Remount the fuel cock in the reverse order of removal.

⚠ WARNING

- **Gaskets ② must be replaced with new ones to prevent fuel leakage.**
- **Tighten the fuel cock bolts evenly.**

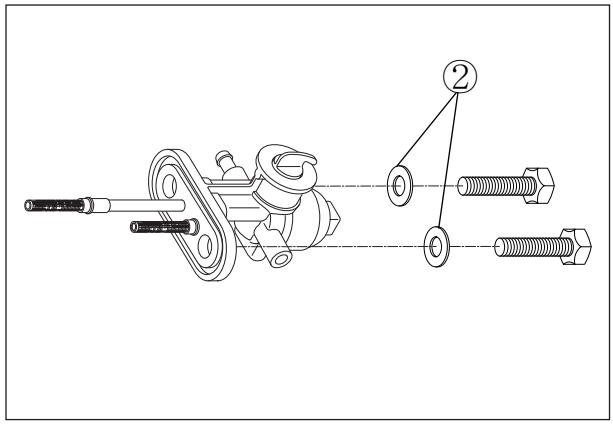

CARBURETOR

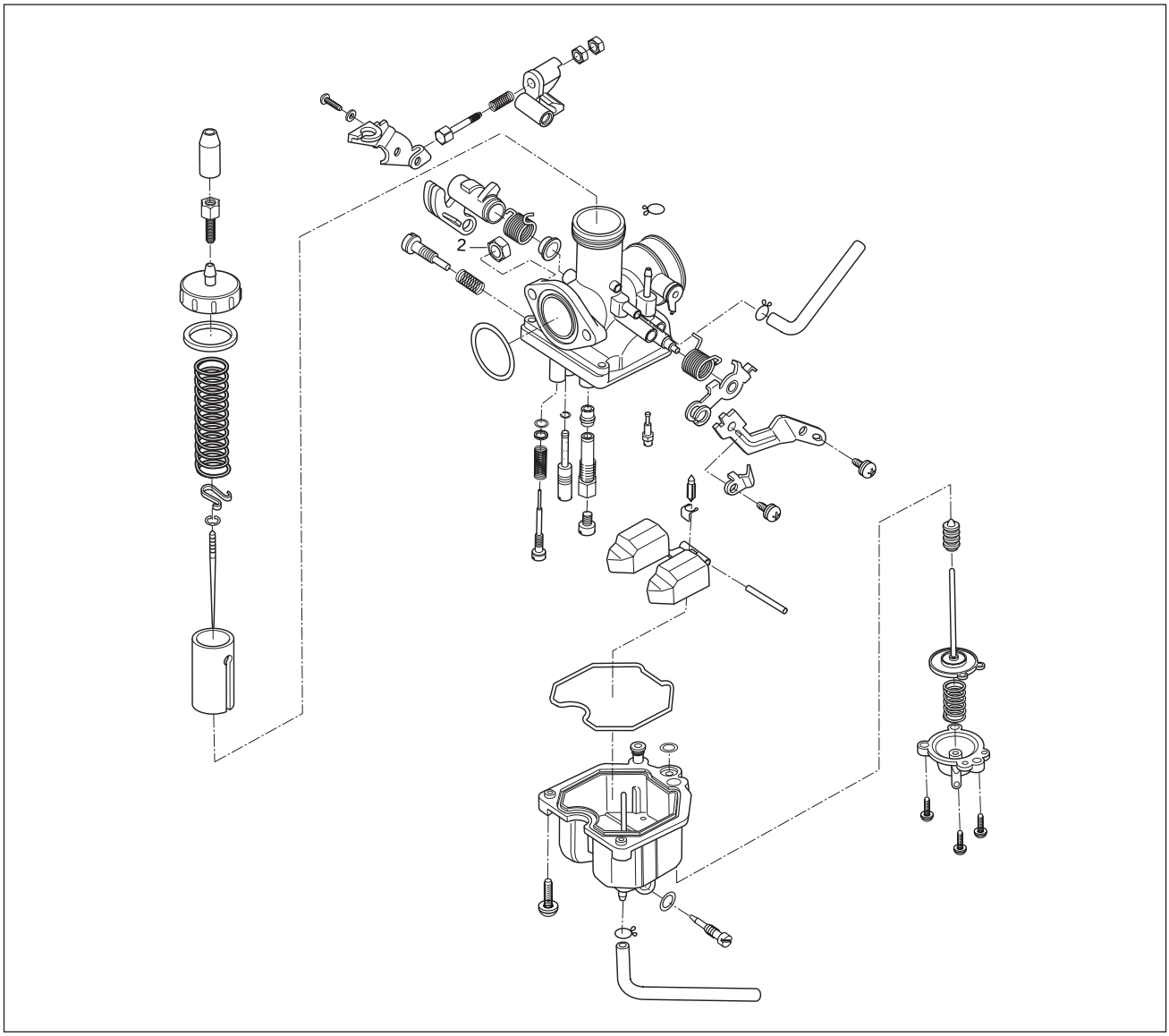

ITEM	SPECIFICATION	ITEM	SPECIFICATION
Carburetor type	PD 18 F	**Needle jet (N.J)**	ϕ 2.6
Bore size	ϕ 24	**Pilot jet (P.J)**	# 38
I.D. NO.	RT125	**By pass (B.P.)**	ϕ 0.9
Idel rpm	1,450±50rpm	**Pilot air jet (P.A.J)**	# 120
Jet needle (J.N.)	AIFC-2	**Valve seat (V.S.)**	ϕ 2.0
Float height	12.5mm (0.492 in)	**Starter jet**	MAX # 500
Main jet (M.J.)	# 102	**Pilot screw (P.S.)**	1¾
Main air jet (M.A.J.)	# 100	**Throttle valve (TH. V)**	# 3

THROTTLE VALVE

- Disconnect the seat and fuel tank. (See page 3-1)
- Looen the carburetor top ① and disconnect the throttle valve.

- Remove the throttle cable from the throttle valve ② and disconnect the throttle cable.

- Disconnect the throttle valve spring and carburetor top from the throttle cable.

- Draw out the retainer clip ③ and disconnect the jet needle ④.
- Inspect the jet needle and wear, damage of the throttle valve ⑤.

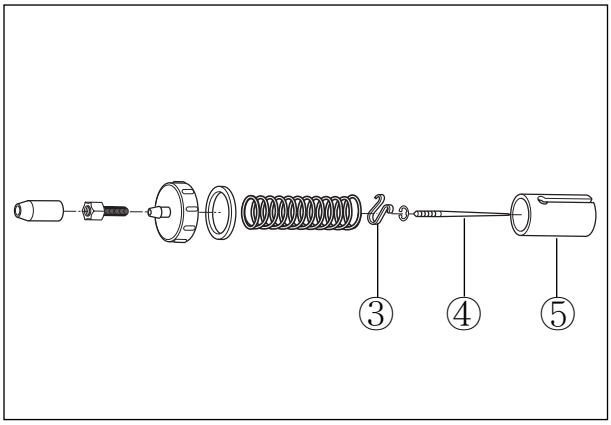

- Install the jet needle and retainer clip into the throttle valve.
  ※ **Needle clip standard position : 3rd groove**
- Install the carburetor top and spring into the throttle cable.
- Install the throttle cable into the throttle valve.

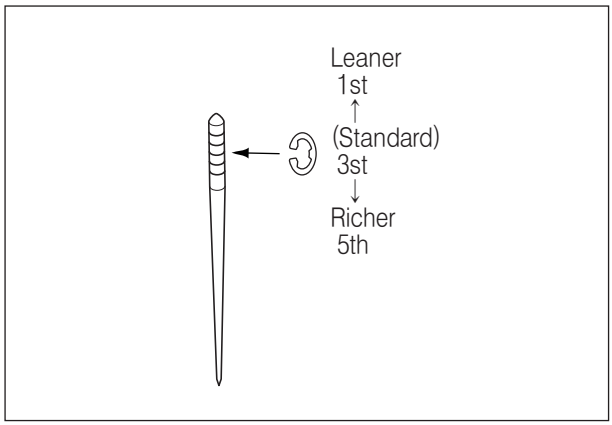

Following adjustments and inspection are necessary after installing the throttle valve.
- Throttle cable play. (Refer to page 2-11)
- Idling adjustment. (Refer to page 2-10)

CARBURETOR

- Remove the seat and fuel tank. (Refer to page 3-1)
- Remove the carburetor top. (Refer to page 4-3)
- Remove the throttle cable.
- Remove the carburetor drain screw and draw out in the carburetor.

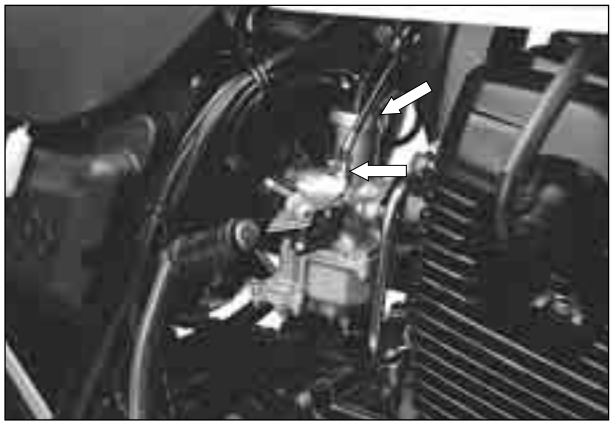

⚠ WARNING

Gasoline is highly explosive.
Extreme care must be taken.

- Remove the choke cable.

- Loosen the carburetor nut and clamp screw.
- Remove the carburetor.

- Disconnect the fuel tube and drain tube.

⊙ ACCELERATOR PUMP

- Loosen the screws and disconnect the pump cover.

- Disconnect the spring of pump diaphragm.
- Inspect the accelerator pump load damage of the diaphragm.
- Clean the diaphragm.

- Set up the diaphragm and the float chamber.
- Install the spring in the pump cover and install the cover in the float chamber.
- Adjust the accelerator pump.

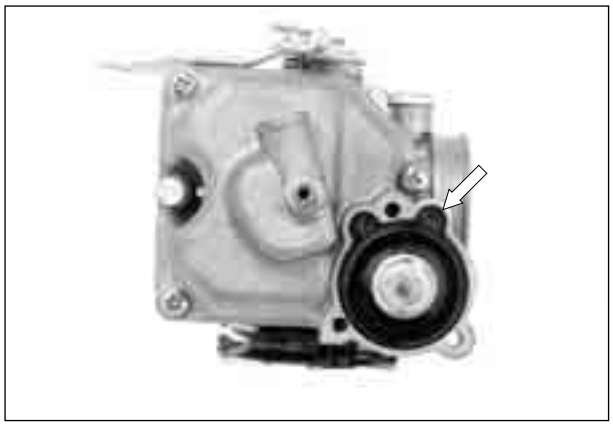

FLOAT AND NEEDLE VALVE

- Loosen the screws and remove the float chamber.

- Pull out the float arm pin.
- Remove the float ① and needle valve ②.

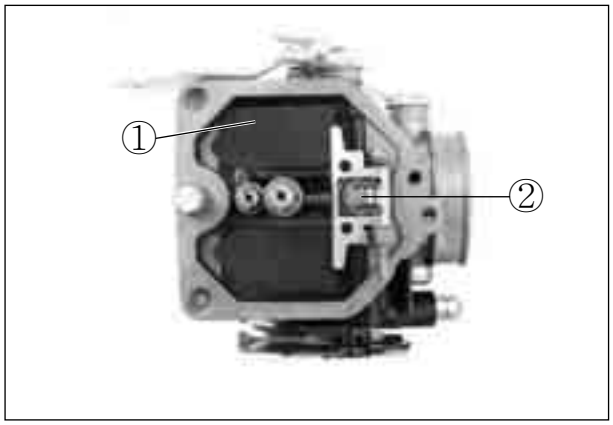

- Inspect the valve and valve seat for wear.
- Inspect the float for transformation.

JETS

- Disconnect the main jet ①, needle jet holder ② and needle jet.
- Disconnect the pilot jet ③.
- Disconnect the pilot screw recording the revolutions until tighten completely.

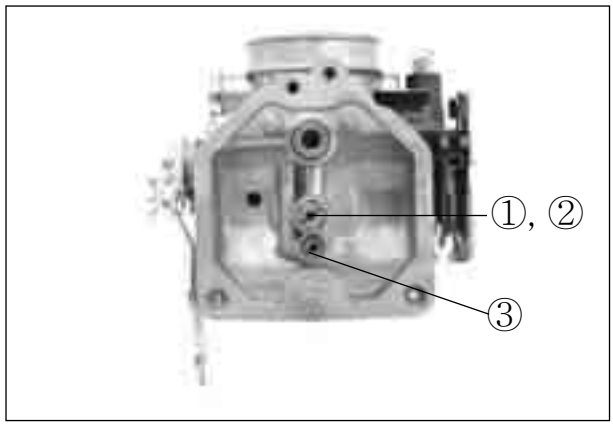

⚠ CAUTION

Do not tighten the pilot screw by force, otherwise can be damaged of the seat.

- Disconnect the throttle stop screw ④.
- Clean the jets with non-flammable cleaning solvent.
- Inspect the pilot screw ⑤ and pilot jets.

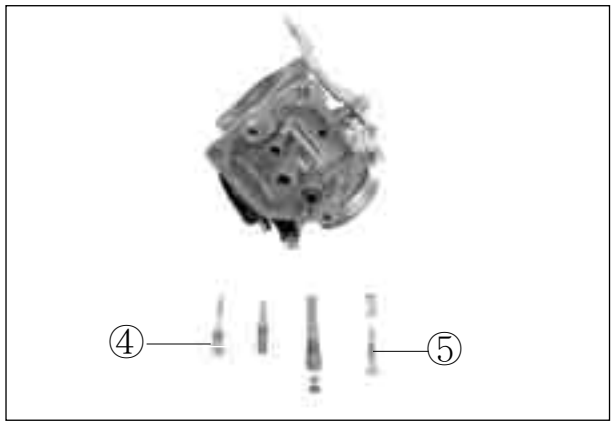

- Clean the jets and body passage with compressed air.

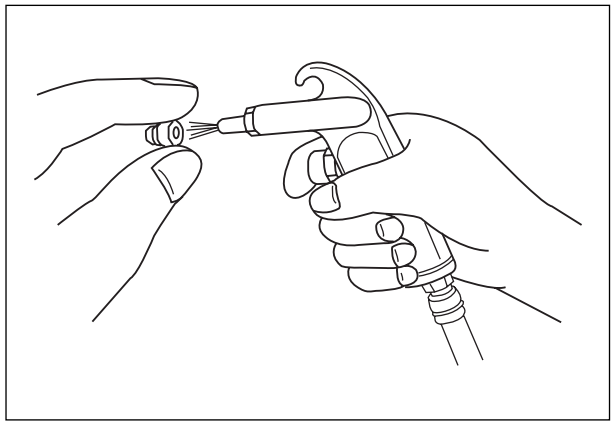

- Install the needle jet ⑥, main jet ⑦ and pilot jet ⑧.
- Install throttle stop screw and pilot screw.

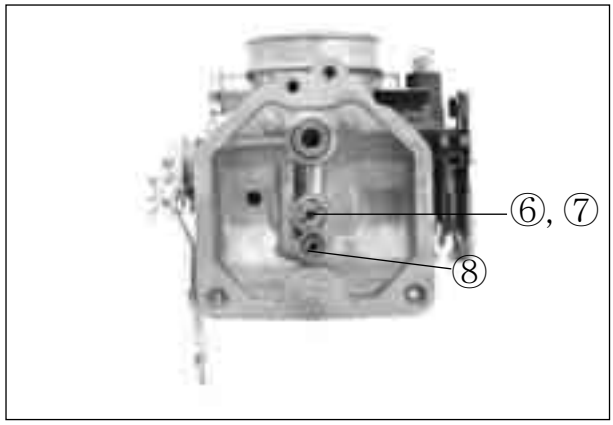

⚠ CAUTION

The pilot screw must be installed with the same revolutions which it was diassembled.

- Adjust the pilot screw, when use a new pilot screw.

● Install the needle valve ①, float ② float arm pin ③.

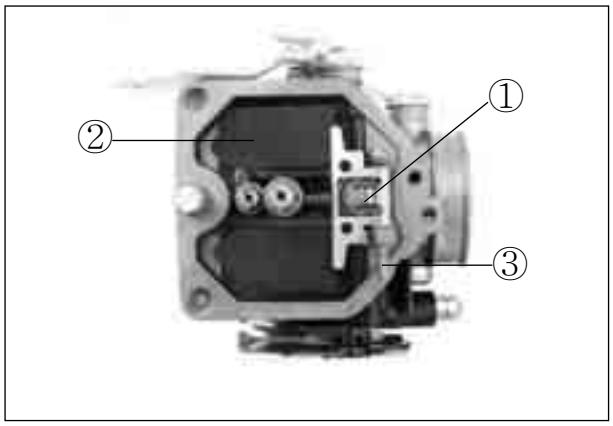

FLOAT ADJUSTMENT

● To check the float height, invert the carburetor body, holding the float arm pin so that the pin will not slip off.

Float height	12.5 mm (0.492 in)

TOOL **Vernier calipers : 09900-20101**

● Check to be sure that the float moves freely.

● Install the new O-ring ⑤ in the float chamber groove ④.
● Install the float chamber and screw.

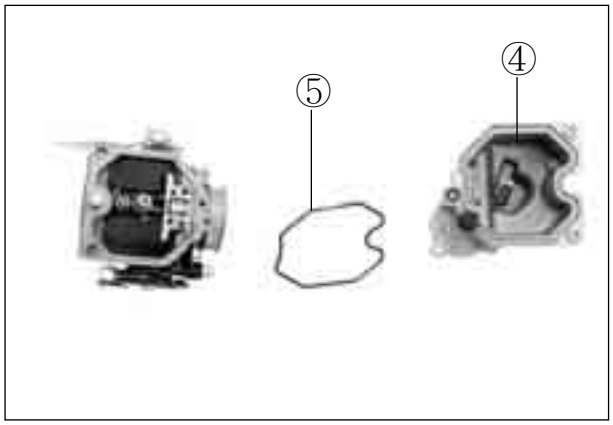

ACCELERATOR PUMP ADJUSTMENT

⚠ CAUTION

Do not adjust except for exchanging the adjust screw.

● Adjust idling. (Refer to page 2-9)
● Adjust throttle grip. (Refer to page 2-9)
● Adjust clearance of the accelerator pump rod loosening the lock nut and turn the adjust screw.
● Tighten the lock nut.

Lock nut clearance	0 mm

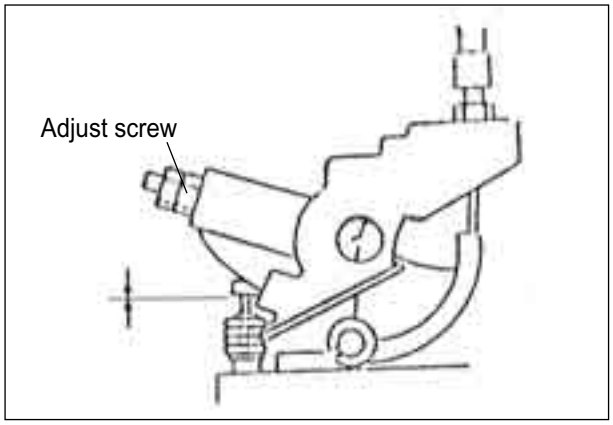

■ **REASSEMBLY**

● Install the fuel tube and drain tube.

● Replace a new O-ring at the carburetor outlet side. Install the carburetor between the intake pipe and air cleaner outlet tube, tighten the carburetor lock nut and clamp screw.
● Connect the choke cable and throttle cable.
● Adjust the choke cable.
● Install the throttle valve. (Refer to page 4-3)
● Adjust play of the throttle cable. (Refer to page 2-11)

PILOT SCREW ADJUSTMENT

① Loosen as standard turn back revolutions after lock the pilot screw suitable.

Standard turn back revolution of pilot screw	1¾ Circle

⚠ CAUTION

Do not tighten the pilot screw by force, otherwise can be damaged of the seat.

② Start up the engine and set its speed at any where between 1,450±50 rpm by turning the throttle screw Ⓐ.
③ Adjust the engine speed at hight position as the pilot screw left-right turning.
④ Repeat again ② → ③.
⑤ Adjust the standard engine idle speed by the throttle stop screw.
⑥ Look into the change idling revolution with snap light of continuously. If the idling revolution is change, repeat the ② → ⑤.

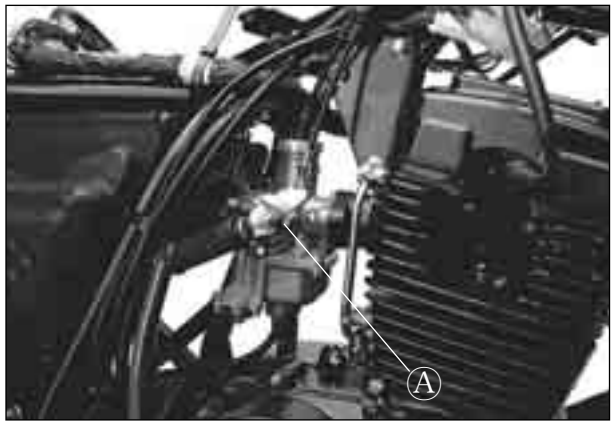

ELECTRICAL SYSTEM

CONTENTS

IGNITION SYSTEM 5-1
CHARGING SYSTEM 5-4
STARTER SYSTEM 5-8
SWITCHES 5-10
LAMP 5-11
BATTERY 5-13

IGNITION SYSTEM

『 *Karion* 』 is started as the battery discharged ignition system without a contact point.
The battery ignition system is composed of a rotor tip, the D.C CDI, the igniton coil and battery.
This system ignites after get signal from ignition timing of pick-up with the electric energy of this battery and occur the 1st electric current. Therefore, a high voltage current is induced in the secondary winding of the ignition coil and results in strong spark between spark plug gap.

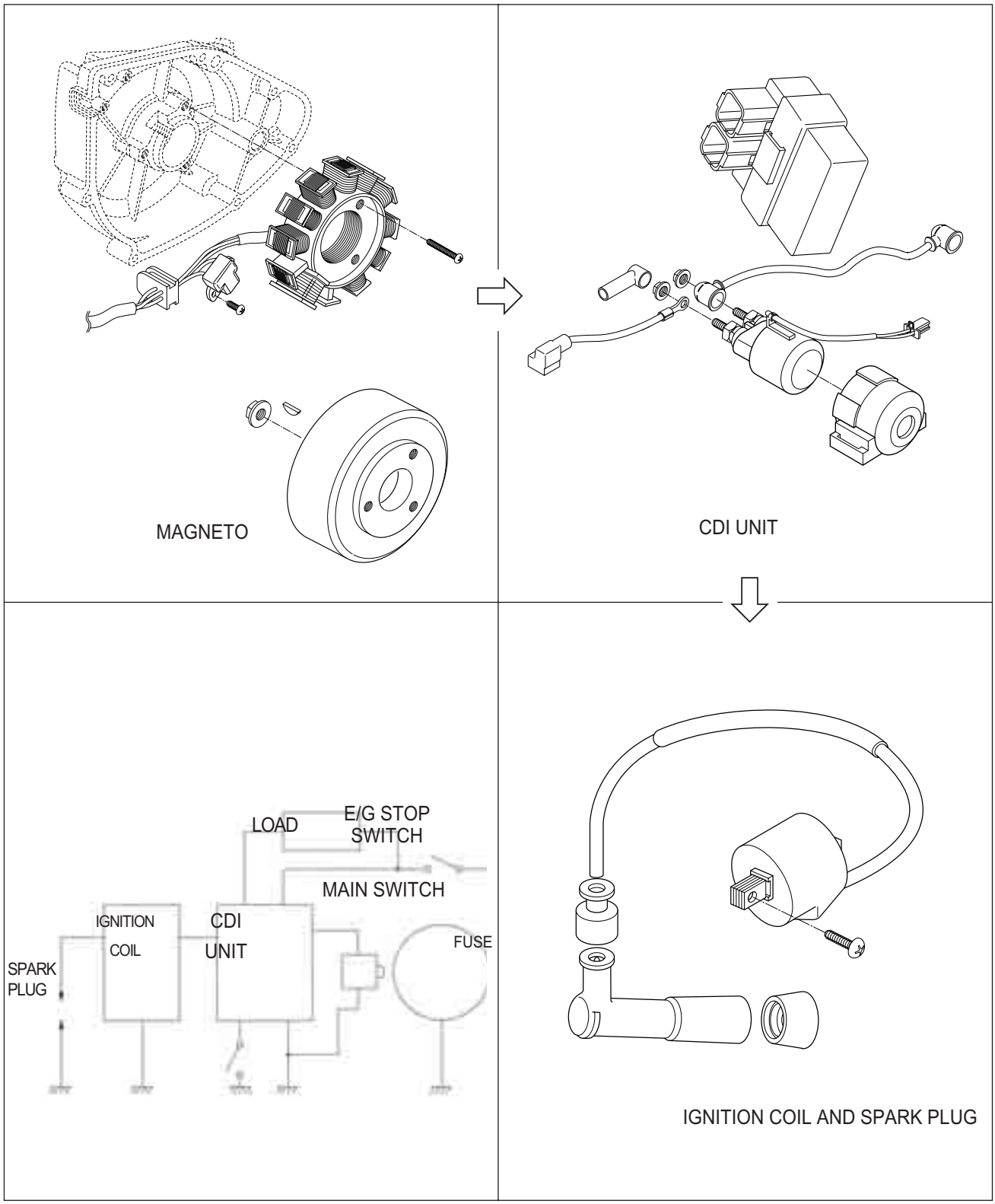

INSPECTION

■ MAGNETO

Using the pocket tester, measure the resistance between the lead wires in the following table.

Pick-up coil	G-L Approx 90~110 Ω
Charging coil	Y-Y Approx 0.6~0.9 Ω

Pocket Tester : 09900-25002

⚠ CAUTION

When mounting the stator on the magneto cover, apply a small quantity of THREAD LOCK "1324" to the threaded parts of screws.

Thread Lock "1324"

■ CDI UNIT

Using the pocket (R × 1kΩ range), measure the resistance between the lead wires in the following table.

Pocket tester : 09900-25002

Unit : kΩ

		⊕ Probe of tester							
		1	2	3	4	5	6	7	8
⊖ Probe of tester	1		∞	∞	10~300	10~300	10~500	∞	10~500
	2	∞		∞	1~100	1~100	1~100	∞	1~100
	3	∞	∞		∞	∞	∞	∞	∞
	4	∞	∞	∞		10~500	∞	∞	∞
	5	10~100	∞	∞	∞		1~100	∞	1~100
	6	5~100	∞	∞	10~500	1~100		∞	∞
	7	5~100	∞	∞	∞	1~100	10~300		10~300
	8	5~100	∞	∞	10~500	∞	∞	∞	

⚠ CAUTION

- **Numberical value may differ a little according to the tester.**
- **Please remind that there may be a defect which can not be identified even though the measurement by using the tester indicates a low voltage.**
- **The range of measurement adjust a [X 1kΩ] unit.**

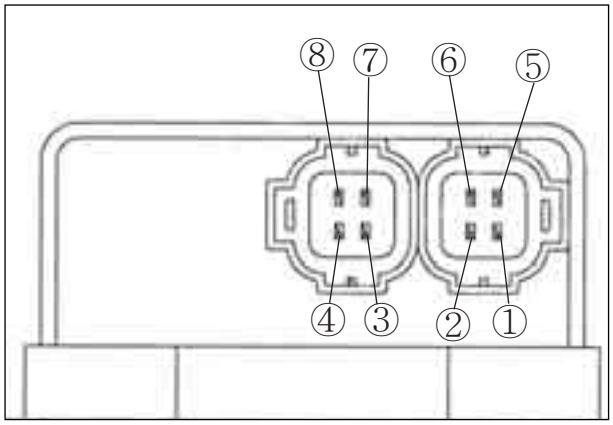

■ IGNITION COIL

- Pull out the spark plug.
- Place it on the cylinder head after installing it at the plug cap to obtain ground.
- Push in the electric starter switch to rotate the starter motor, to have the test of sparking performance.
- If not emited spark or the spark bring out the orange color, replace the ignition coil.

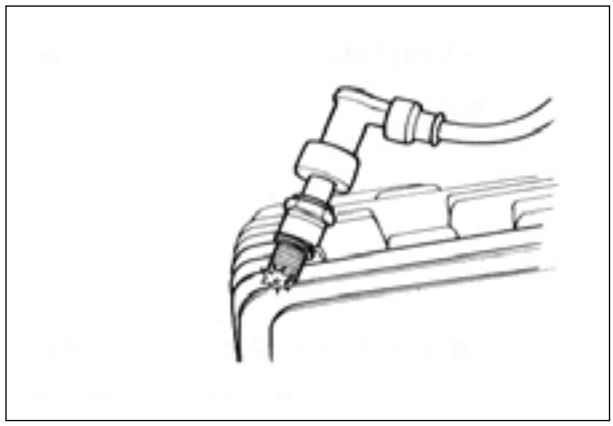

- Check the ignition coil with the pocket tester.

Ignition coil resistance	
Primary	0.19 ~ 0.24 Ω
Secondary	5.4 ~ 6.6kΩ

TOOL Pocket tester : 09900-25002

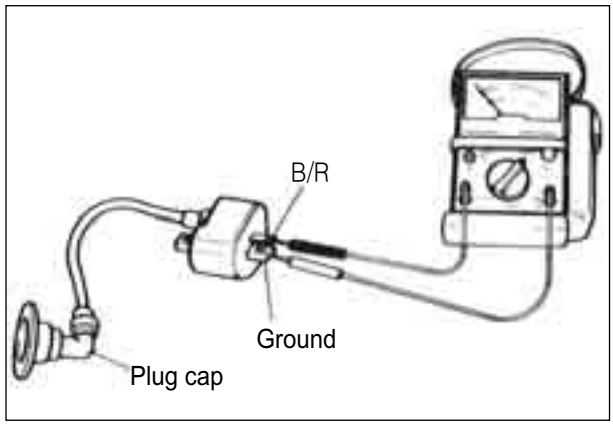

■ SPARK PLUG

Clean the plug with a wire brush and pin. Use the pin to remove carbon, taking care not to damage the porcelain.

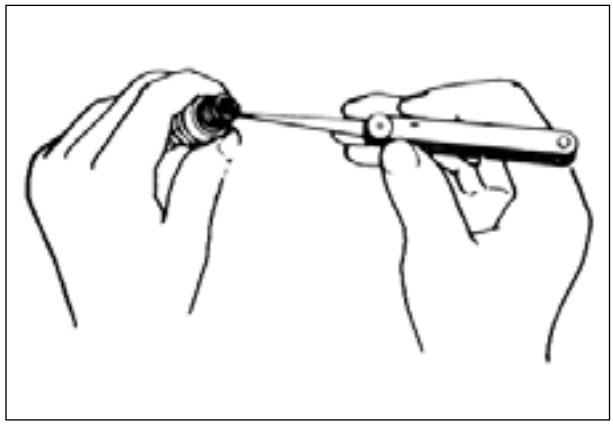

- Check the gap with a thickness gauge.

TOOL Thickness gauge : 09900-20806

Spark plug gap	0.8~0.9 mm (0.032 - 0.035 in)

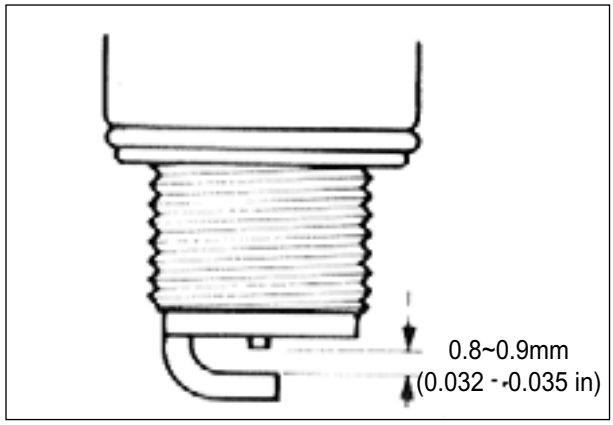

CHARGING SYSTEM

The circuit of the charging system is indicated in figure, which is composed of and the AC generator, regulator / rectifier unit and battery.
The AC current generated from the AC generator is converted by the rectifier and is turned into the DC current, then it charges the battery.

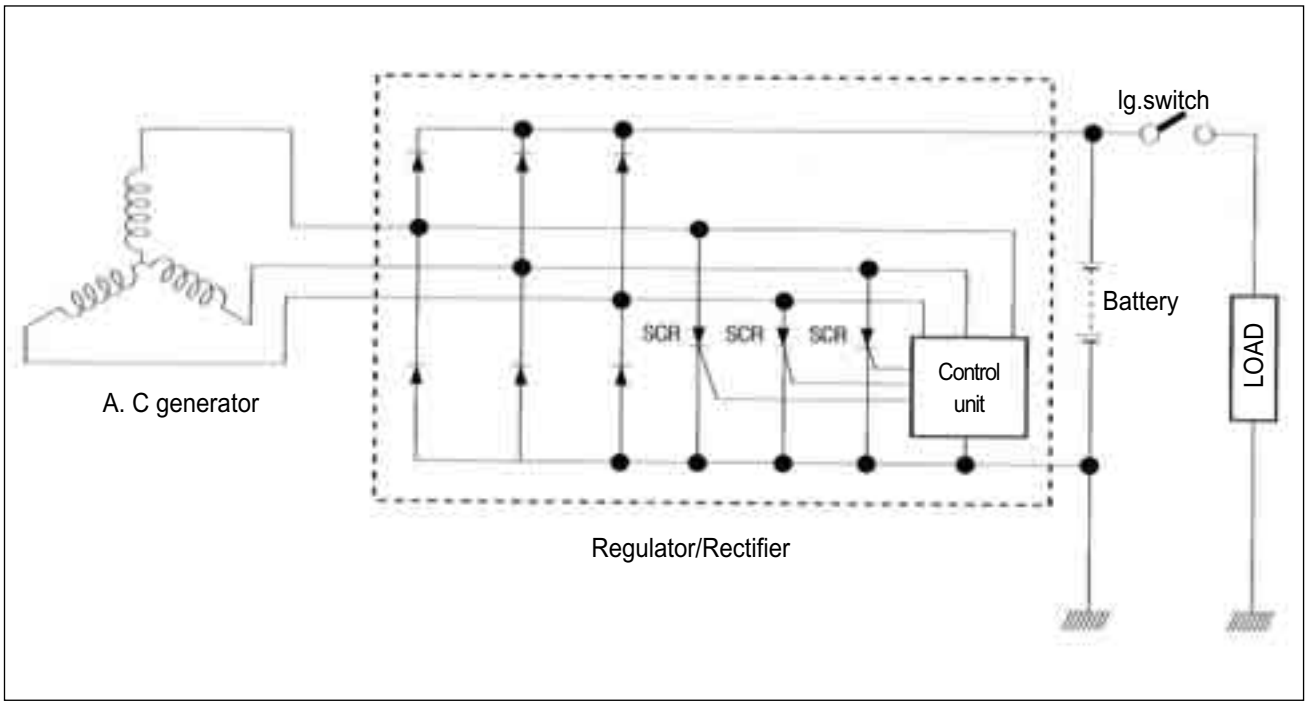

⊙ Function of Regulator

While the engine rpm is low and the generated current of the AC generator is lower than the adjusted voltage of the regulator, the regulator does not function, incidentally the generated current charges the battery directly.

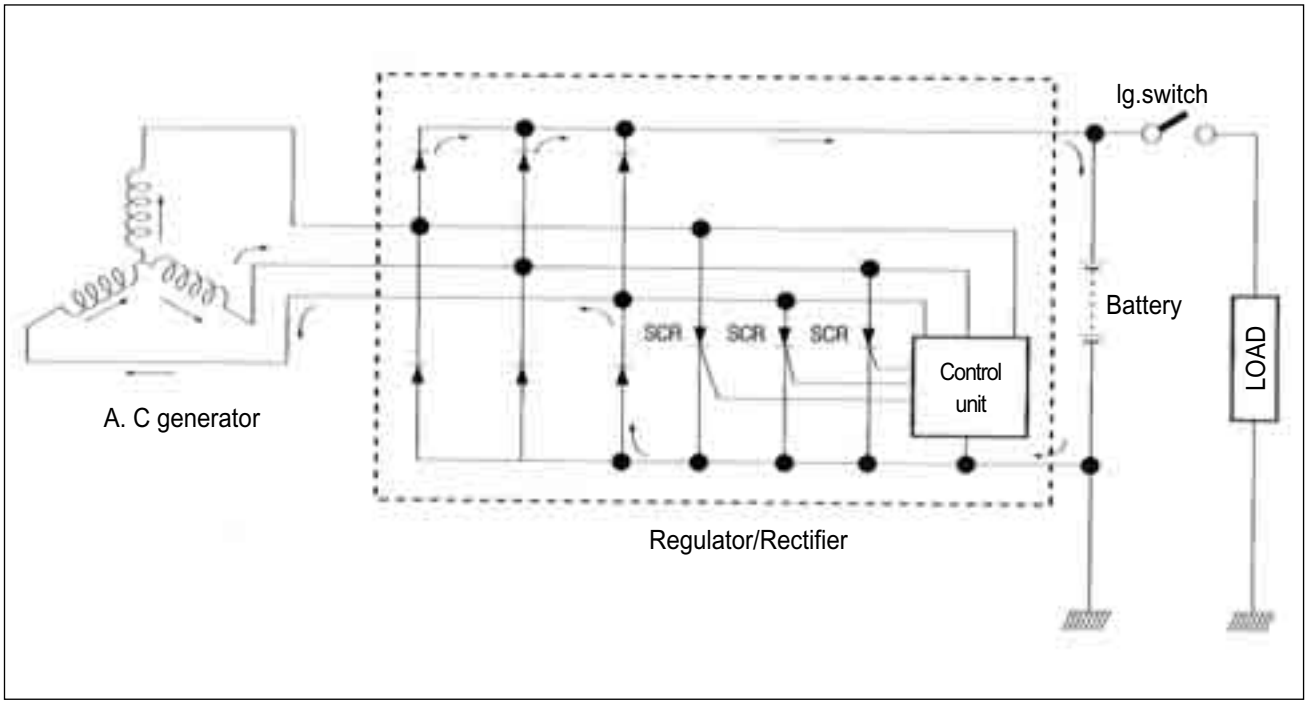

When the engine rpm become higher, the generated voltage of the AC generator also becomes higher and the voltage between points Ⓐ and Ⓑ of the regulator according becomes high, and when it reaches the adjusted voltage of the control unit, consequently the control unit becomes "ON" condition. On the "ON" condition of the control unit, signal will be sent to the SCR (Thyristor) gate probe and SCR will become "ON" condition. Then the SCR becomes conductive to the direction from point Ⓐ to point Ⓑ. Namely at the state of this, the current generated from the AC generator gets through SCR without charging the battery and returns to the AC generator again. At the end of this state, since the AC current generated from the AC generator flows into the point Ⓑ, reverse current tends to flow to SCR, then the circuit of SCR turns to "OFF" mode and begins to charge the battery again. Thus these repetitions maintain charging constant voltage to the battery and protect it from overcharging.

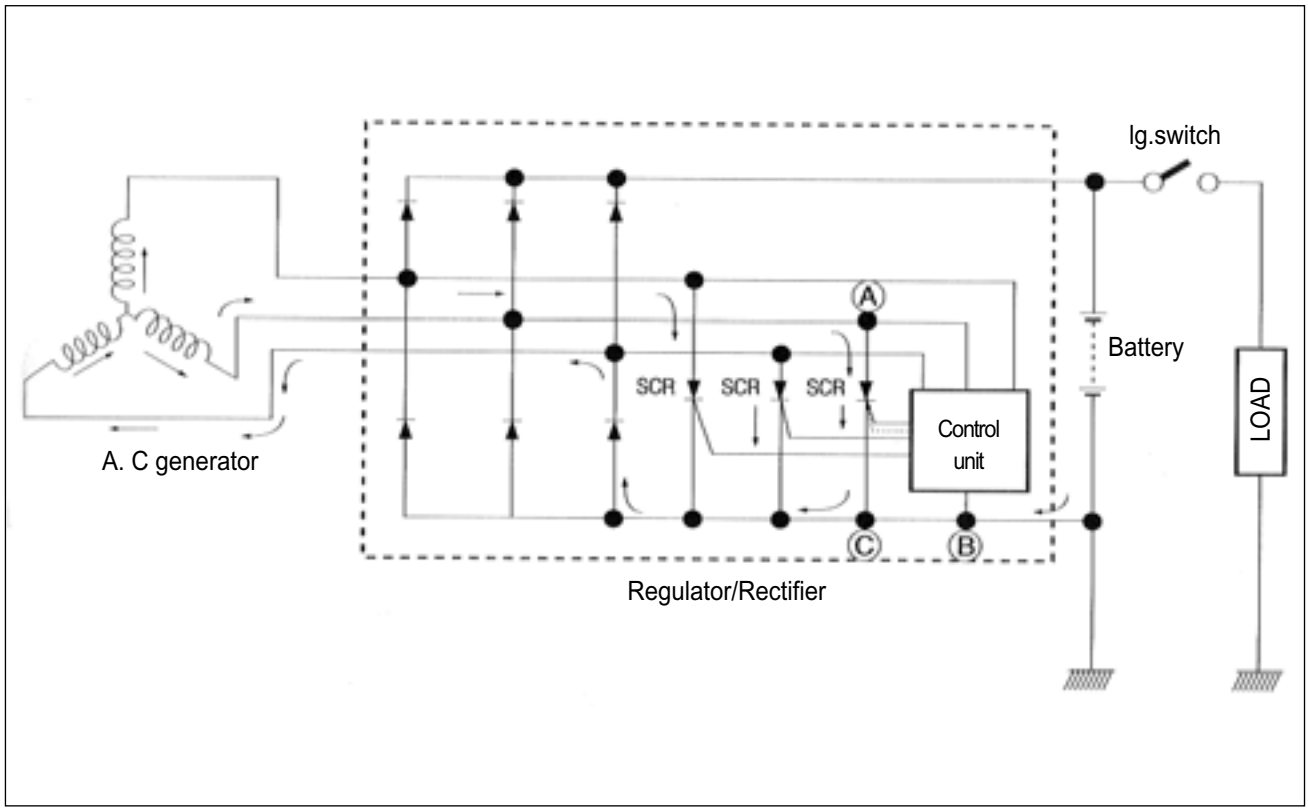

INSPECTION

■ CHARGING OUTPUT CHECK

Start the engine and keep it running at 5,000 rpm.
Using the pocket tester, measure the DC voltage between the battery terminal ⊕ and ⊖.
If the tester reads under 14.0 V or over 15.0 V, check the magneto no-load performance and regulator / rectifier.

⚠ CAUTION

When making this test, be sure that the battery is full-charged condition.

Pocket tester : 09900-25002

Standard charge	14.0～15.0V(at 5,000rpm)

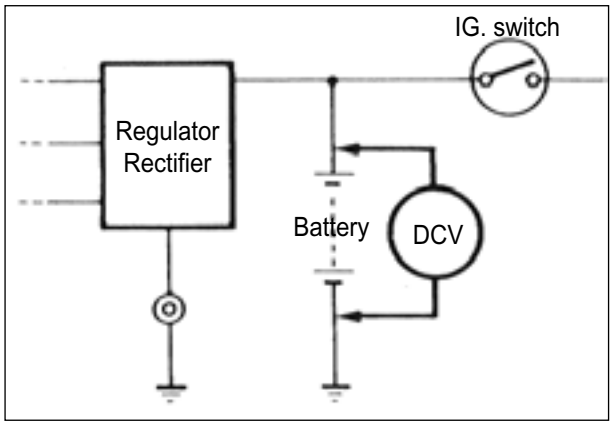

MAGNETO NO-LOAD PERFORMANCE

Disconnect the three lead wires from the magneto terminal.
Start the engine and keep it running at 5,000 rpm.
Using the pocket tester, measure the AC voltage between the three lead wires.
If the tester reads under 67 V or over 99 V the magneto is faulty.

Standard NO-load performance of AC generator	67~99V(at 5,000rpm)

Pocket tester : 09900-25002

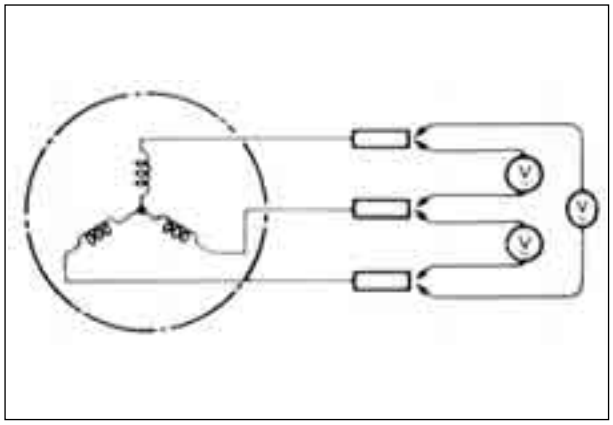

■ **REGULATOR / RECTIFIER**

- Disconnect the coupler.
- Using the multi-tester (× 1 kΩ range), measure the resistance between the terminals in the following table.

If the resistance checked is incorrect, replace the regulator / rectifier.

Unit : kΩ

⊖ Probe of tester	⊕ Probe of tester	①	②	③	④	⑤
	①		0.8～2	0.8～2	0.8～2	30～55
	②	0.8～2		∞	∞	0.8～2
	③	0.8～2	∞		∞	0.8～2
	④	0.8～2	∞	∞		0.8～2
	⑤	30～55	0.8～2	0.8～2	0.8～2	

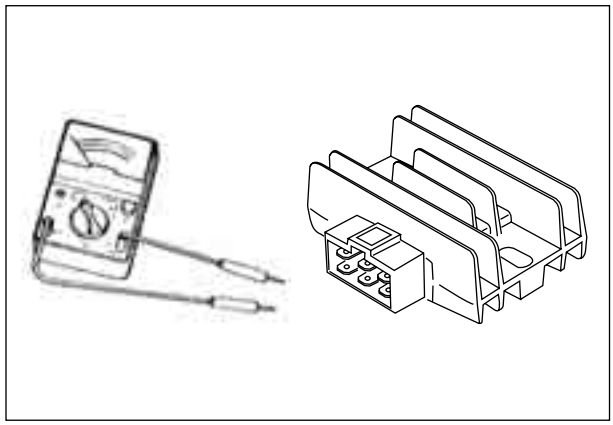

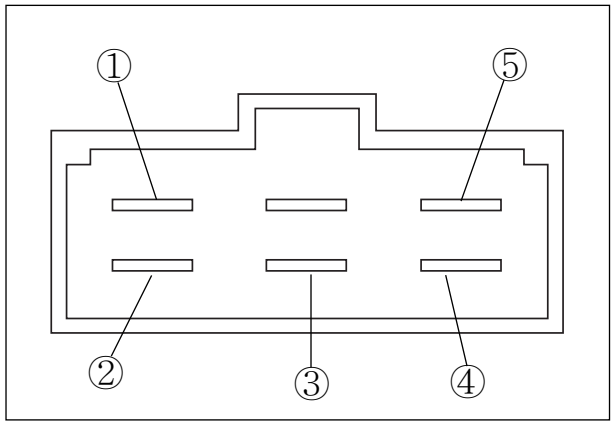

STARTER SYSTEM

The starter system is shown in the diagram below : namely, the starter motor, relay, IG switch, starter button and battery. Depressing the starter button (on the right handlebar switch box) energizes the relay, causing the contact points to close which connects the starter motor to the battery.
The motor draws about 80 amperes to start the engine.

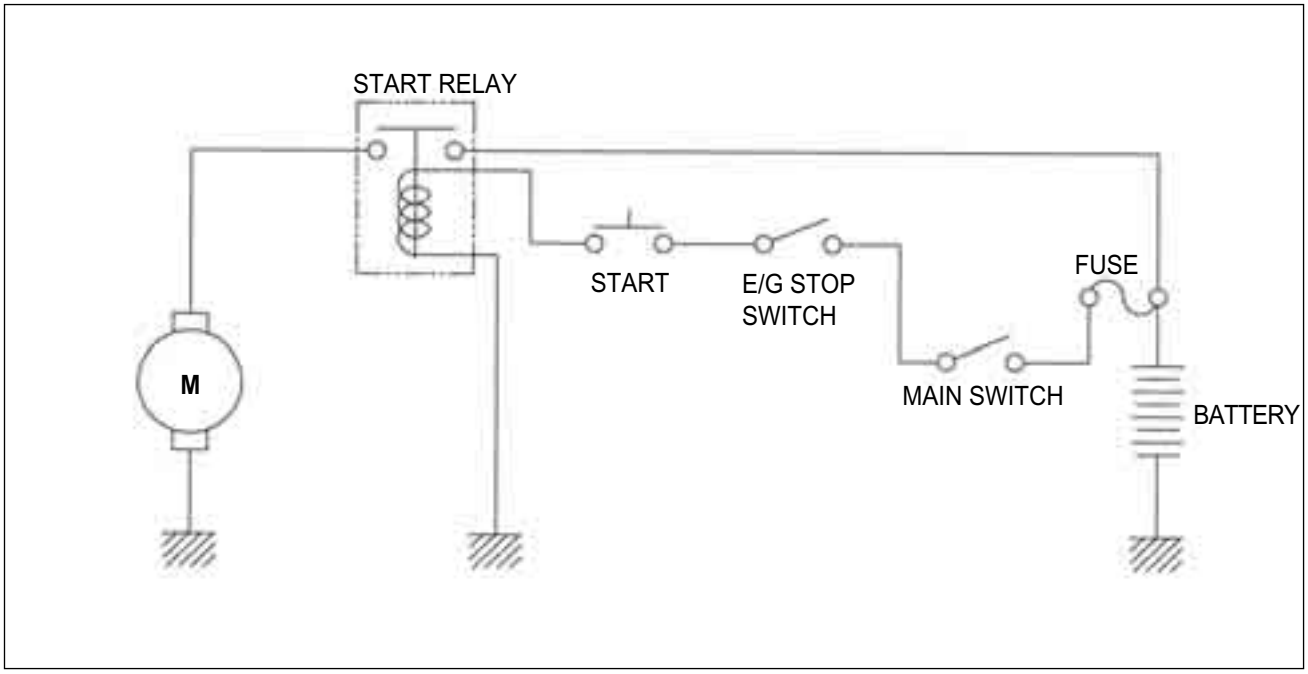

⊙ STARTER MOTOR REMOVAL AND DISASSEMBLY.
Remove the starter motor.
Disassemble the starter motor as follows.

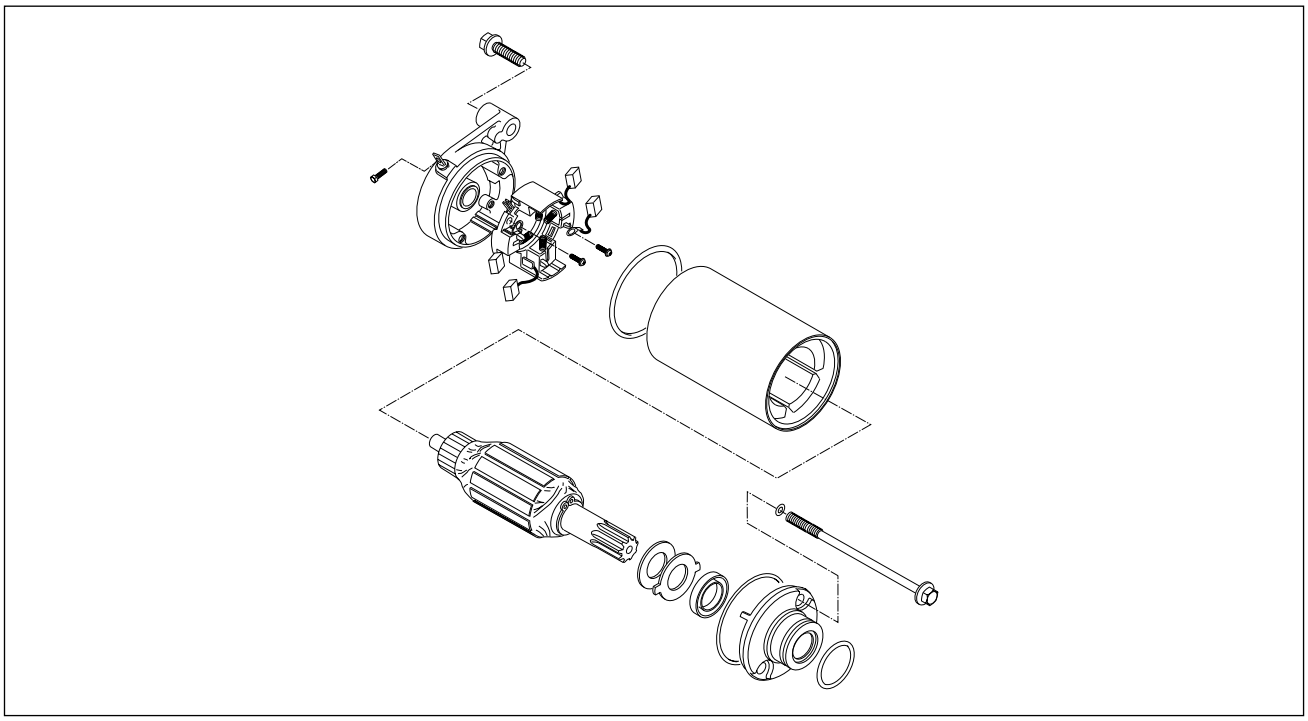

⦿ STARTER MOTOR INSPECTION

■ CARBON BRUSH

Inspect the brushes for abnormal wear, crack or smoothness in the brush holder.
If the brush has failed, replace the brush sub assy.

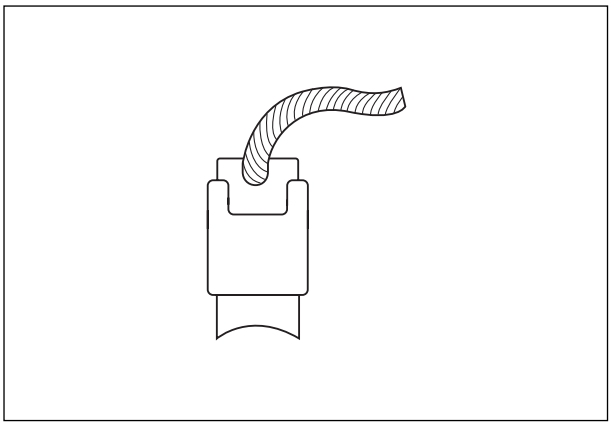

■ COMMUTATOR

Inspect the commutator for discoloration, abnormal wear or undercut Ⓐ.
If the commutator is abnomally worn, replace the armature.
When surface is discolored, polish it with #400 sand paper and clean it with dry cloth.

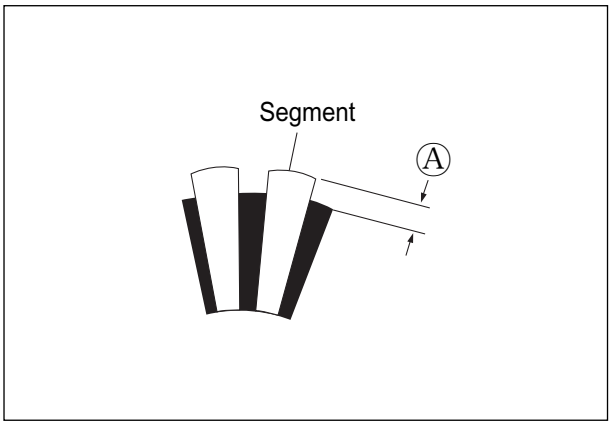

■ ARMATURE COIL INSPECTION

Check for continuity between each segment.
Check for continuity between each segment and the armature shaft.
If there is no continuity between the segments or there is continuity between the segment and shaft, replace the starter motor with a new one.

TOOL **Pocket tester : 09900-25002**

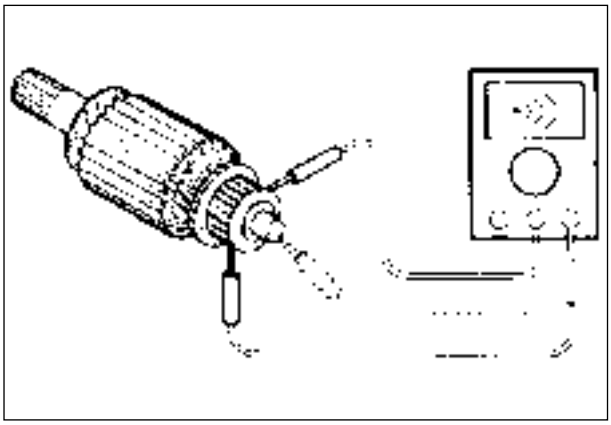

■ STARTER MOTOR REASSEMBLY

Reassemble the starter motor. Pay attention to the following points :

- Align the mark ① on the housing with the line ② on the housing end.

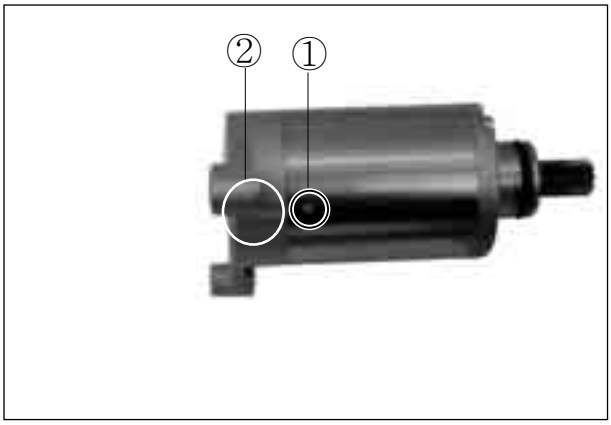

- Apply SUPER GREASE "A" to the O-ring ① and remount the starter motor.

  SUPER GREASE "A"

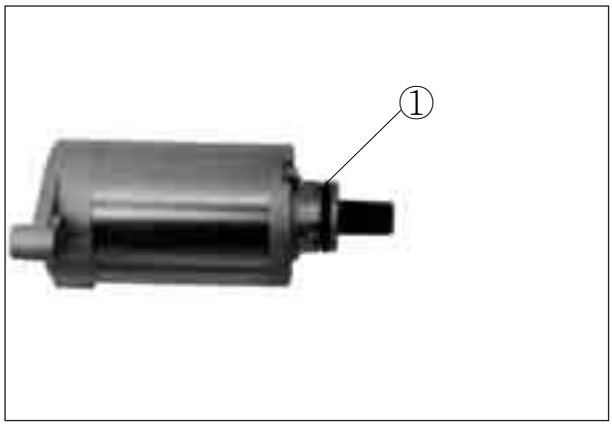

SWITCHES

Measure each switch for continuity using a tester. If any abnormality is found, replace the respective switch assemblies with new ones.

Pocket tester : 09900-25002

IGNITION SWITCH				
	R	O	BW	BR
ON	○	○		
OFF			○	○
LOCK			○	○

LIGHT SWITCH		
	O	Gr
☼	○	○
○		

DIMMER SWITCH			
	Yw	Y	W
HI	○		○
LO	○	○	

TURN SIGNAL SWITCH			
	Lg	Sb	B
L		○	○
PUSH			
R	○	○	

ENGINE STOP SWITCH		
	O	OB
⊗		
⌒	○	○

STARTER SWITCH		
	OB	YG
ON	○	○
OFF		

HORN SWITCH		
	G	BW
ON	○	○
OFF		

FRONT/REAR BRAKE LAMP SWITCH		
	O	WB
ON	○	○
OFF		

LAMP

⊙ HEADLAMP

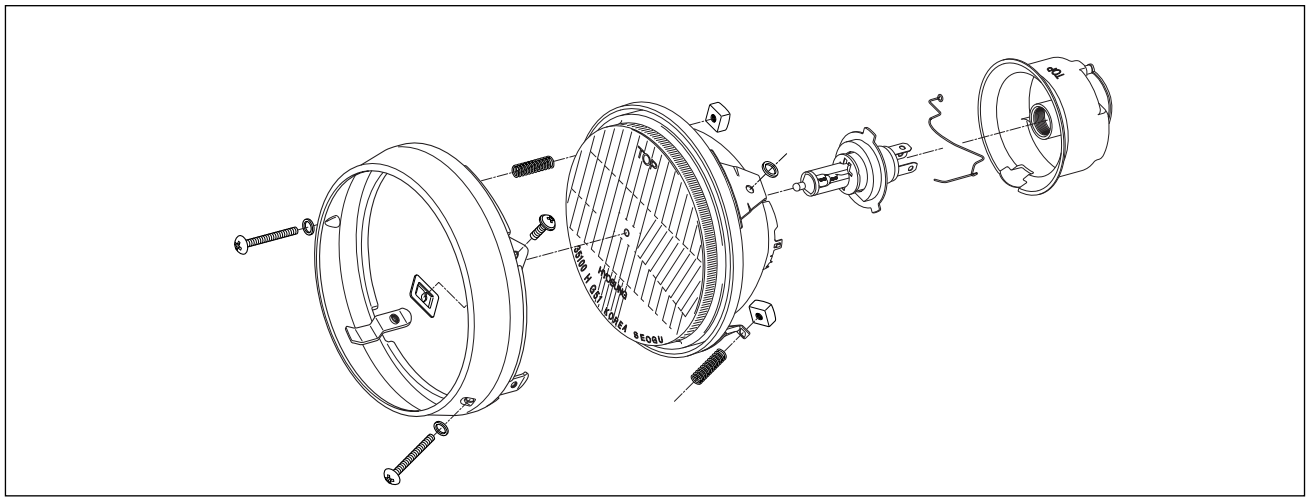

⊙ TURN SIGNAL LAMP

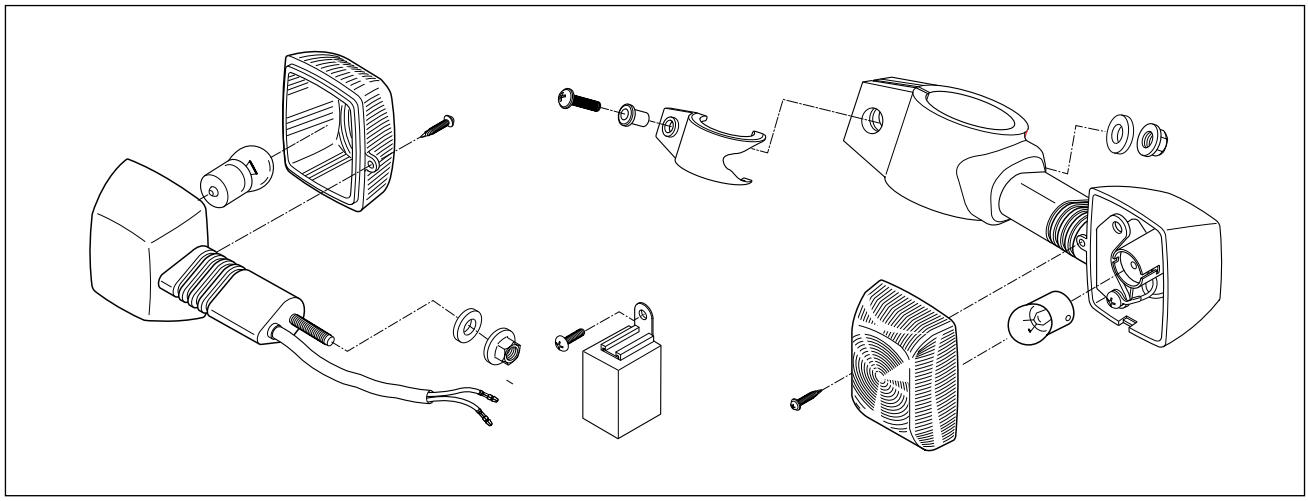

⊙ TAIL / BRAKE LAMP

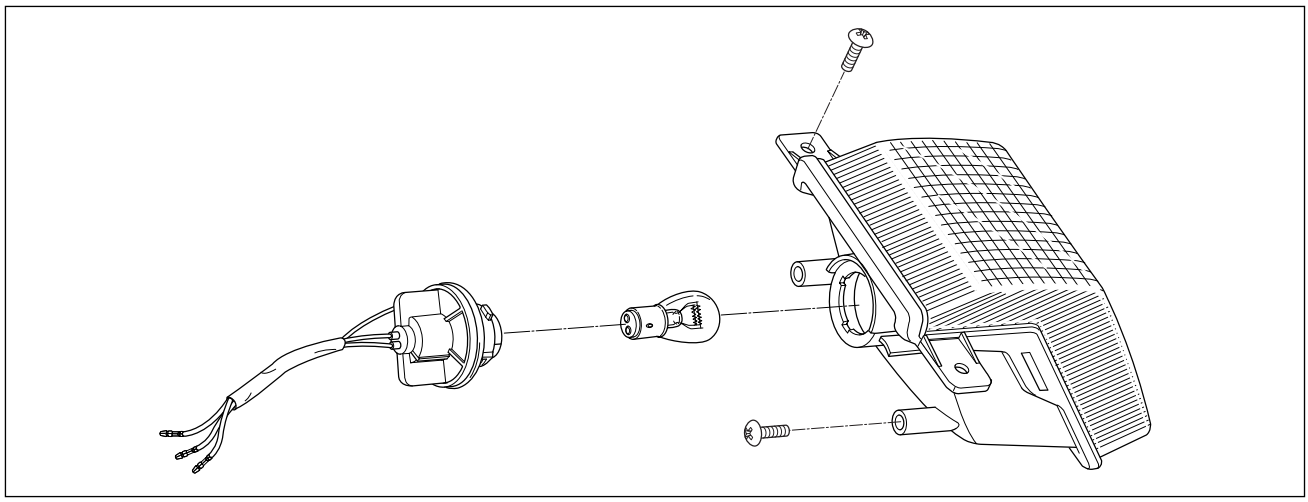

⦿ COMBINATION METER

Remove the combination meter.

Disassemble the combination meter as shown in the illustration.

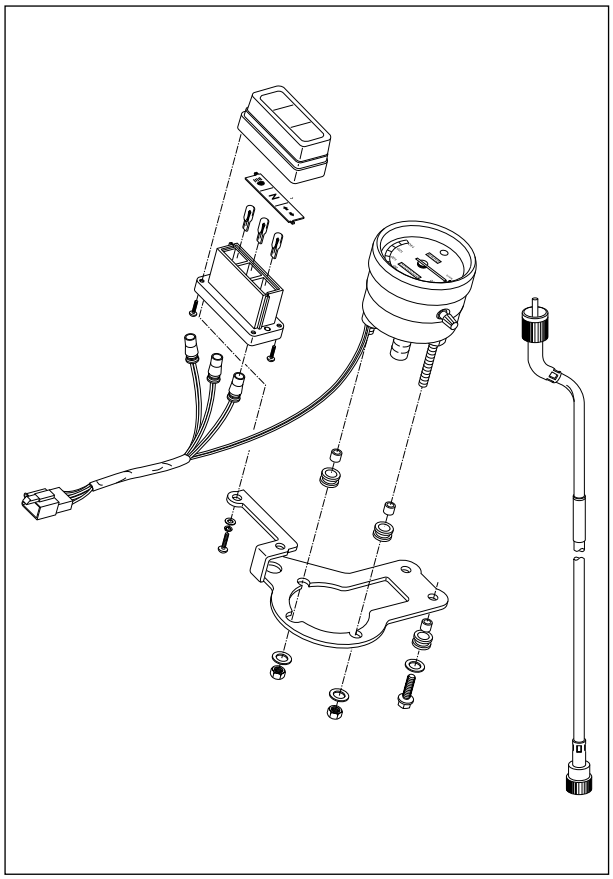

■ INSPECTION

Using the pocket tester, check the continuity between lead wires in the following illustration.

If the continuity measured incorrect, replace the respective part.

Pocket tester : 09900-25002

⚠ CAUTION

When making this test, it is not necessary to remove the combination meter.

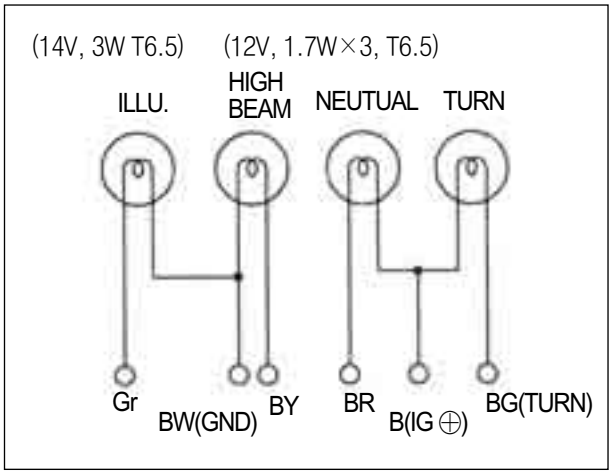

BATTERY

CAUTION OF BATTERY TREATMENT

The battery needs attention generally as it occur flammability gas.
If does not, it should be explosion and severe accident.
Pay attention to the following points.

- Prohibit positively that come in contact with short, spark or firearms.
- The battery recharge where be well-ventilated wide place.
  Prohibit positively at the shut tight room.

CAUTION OF BATERY ELECTROLYTE TREATMENT

- Pay attention that the battery electrolyte not stains the chassis or the humanbody.
- If stains the chassis or the humanbody, at once wash a vast quantity of water.
  When it be stained, clothes should come into being a hole or painting should take off.
  Be cured from a doctor.
- When the battery electrolyte was droped the surface of land, wash a vast quantity of water.
  Neutralize by hudroxide, bicarbonate of soda and so on.

CAUTION OF MAINTENANCE FREE-BATTERY TREATMENT

- Do not remove the aluminum tape what sealing the battery electrolyte filler hole untill use as battery of completely seal type.
- Do not use with the exception exclusive the battery electrolye.
- When pour into the battery electrolyte, necessarily use the electrolyte of the rules capacity.
- Do not open the sealing cap after recharge the battery eletrolyte.

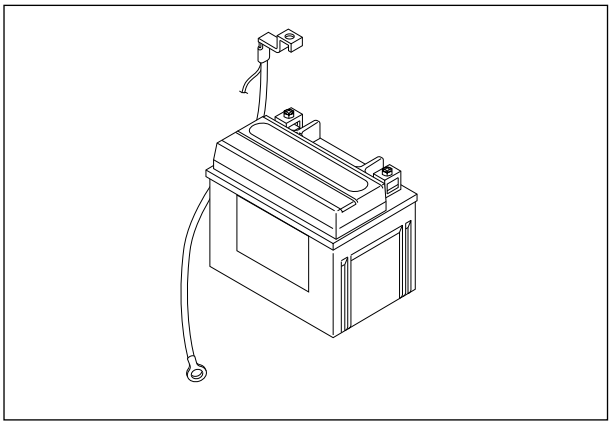

- Filling electrolyte.

① Put the battery on even land and remove the aluminum tape sealing
② Remove the cap at the electrolyte container.

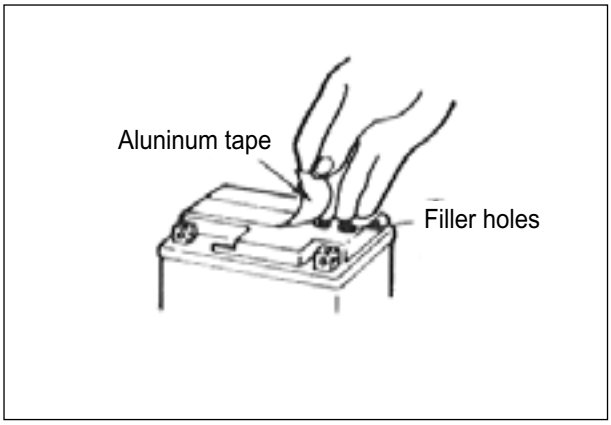

⚠ CAUTION

Do not remove the seal of the electrolyte container, not prick with sharp thing.

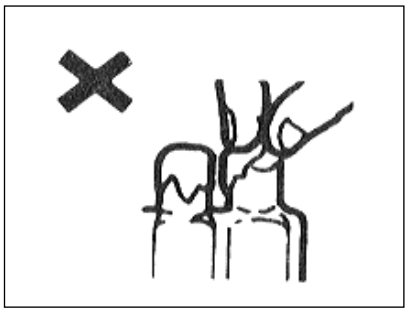

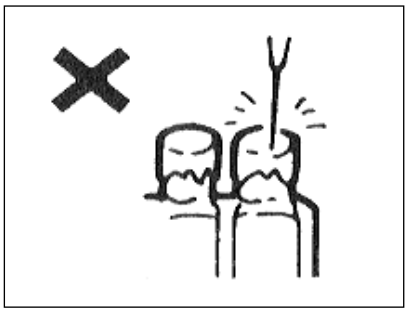

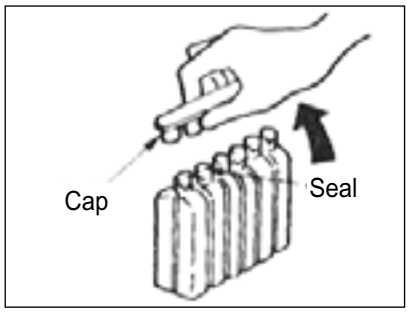

③ Pouring in battery electrolyte

When insert the nozzles of the electrolyte container into the battery' s electrolyte filler holes, holding the container firmly so that it does not fall.

Take precaution not to allow any fluid to spill.

⚠ CAUTION

The pouring of electrolyte may not be done if the electrolyte container is pushed slopely.

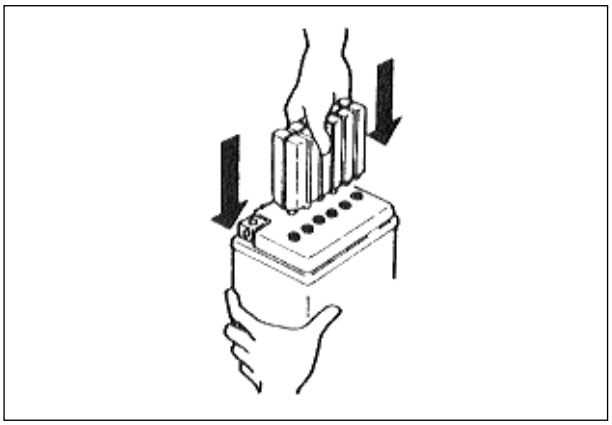

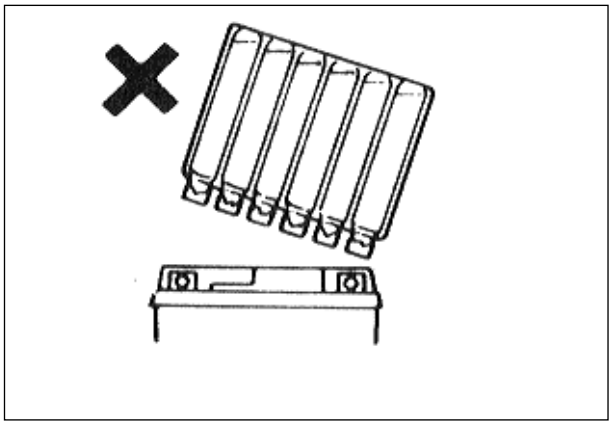

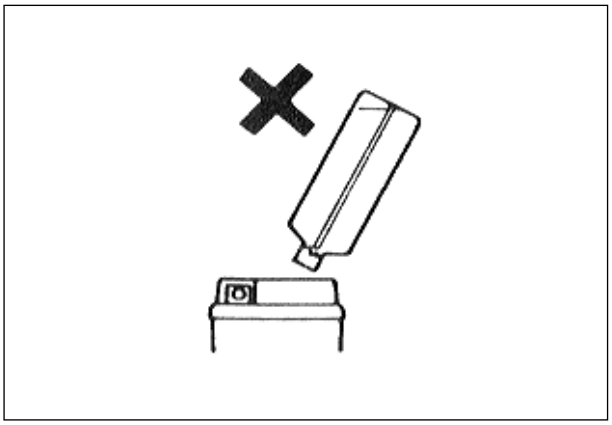

④ Confirm of pour

Make sure that air bubbles are coming up each electrolyte container, and leave in this position for more than about 20 minutes.

⚠ CAUTION

If no air bubbles are coming a from a filler port, tap the botton of the two or three times.

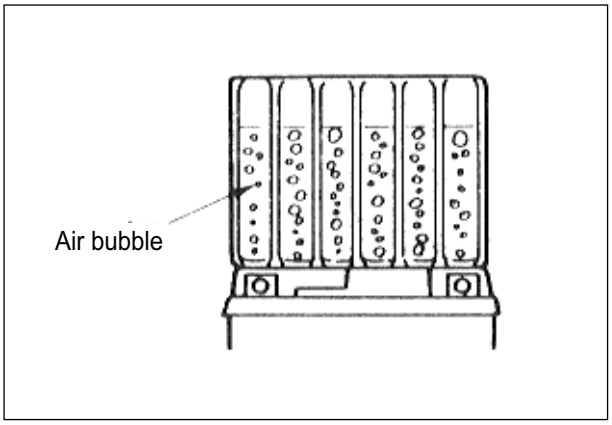

⑤ Separation of electrolyte container.
After confirming that the electrolyte has entered the battery completely, remove the electrolyte containers from the battery.

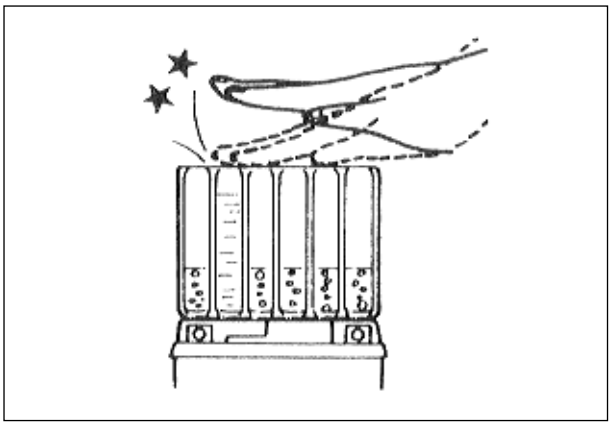

⚠ CAUTION

Draw out slowly otherwise in case of remain electrolyte vaporize.

⑥ Insert of the caps
Insert the cap into the filler holes, pressing in firmly so that the top of the caps do not protrude above the upper surface of the battery' s top cover.

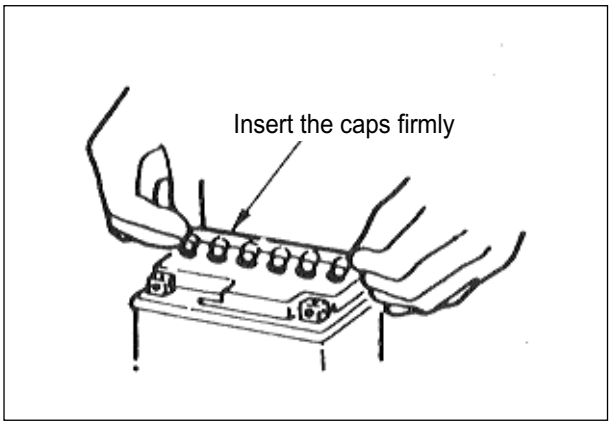

SERVICING

Visually inspect the surface of the battery container. If any signs of cracking or electrolyte leakage from the sides of the battery have occurred, replace the battery with a new one. If the battery terminals are found to be coated with rust or an acidic white powdery substance, then this can be cleaned away with sandpaper.

RECHARGING OPERATION

- Using the pocket tester, check the battery voltage. If the voltage reading is less than the 12.8V (DC), recharge the battery with a battery charger.

⚠ CAUTION

When recharging the battery, remove the battery from the motorcycle.

NOTE

Do not remove the caps on the battery top while recharging.

⚠ CAUTION

Be careful not to permit the charging current to exceed 3A at any time.

- After recharging, wait for more than 30 minutes and check the battery voltage with a pocket tester.
- If the battery voltage is less than the 12.8V, recharge the battery again.
- If battery voltage is still less than 12.8V, after recharging, replace the battery with a new one.
- When the motorcycle is not used for a long period, check the battery every 1 month to prevent the battery discharge.

Voltage	How to charge
Less than 11.5V	Charge 20Hour as 0.7A
Between 11.5~12.8V	Charge 5~10Hour as 0.7A
More than 12.8V	No charge

CHASSIS

CONTENTS

FRONT WHEEL · · · · · 6-1

FRONT BRAKE · · · · · 6-5

FRONT FORK · · · · · 6-12

STEERING STEM · · · · · 6-18

REAR WHEEL AND REAR BRAKE · · · · · 6-22

REAR SOCK ABSORBER · · · · · 6-27

SWING ARM · · · · · 6-28

FRONT WHEEL

REMOVAL

- Support the machine by jack, block.
- Disconnect the speedometer cable.

● Disconnect the clamp.
● Remove the brake hose.

● Pull out the front fork clamp bolt ① and remove the front axle ②.
● Draw out the front axle and take off the front wheel.

DISASSEMBLY

FRONT WHEEL

● Remove the front brake disk.

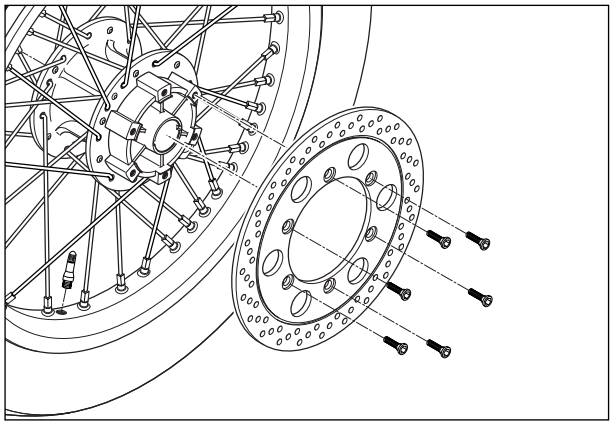

● Remove the wheel bearing by using the special tool.
Wheel bearing remover : 09941-50111

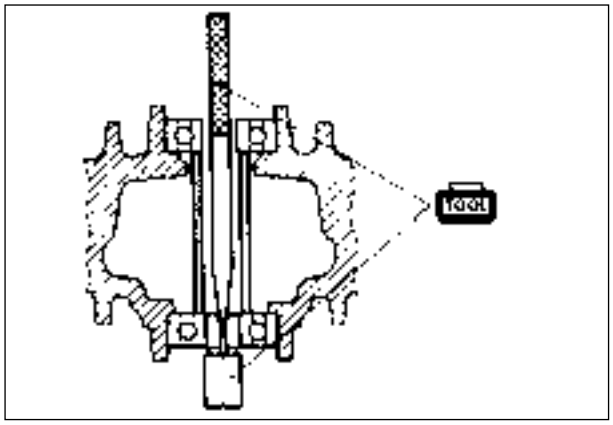

⚠ CAUTION

The removed bearing should be replaced with new ones

⦿ INSPECTION

■ WHEEL BEARING

Inspect the play of the wheel bearings by finger while they are in the wheel. Rotate the inner race by finger to inspect for abnormal noise and smooth rotation.
Replace the bearing according to in the following procedure if there is anything unusual.

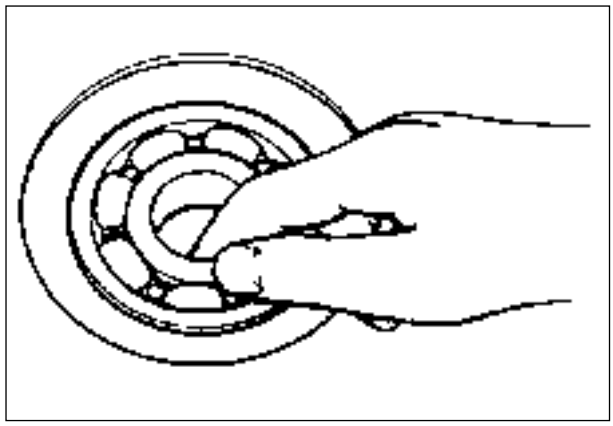

■ TIRE

For inspection of the tire : Refer to page 2-17.

■ FRONT AXLE

Measure the front axle runout using the dial gauge. If the runout exceeds the limit, replace the front axle.

TOOL **Dial gauge : 09900-20606**
Magnetic stand : 09900-20701
V-block : 09900-21304

Axle shaft runout	Service limit
	0.25 mm (0.01 in)

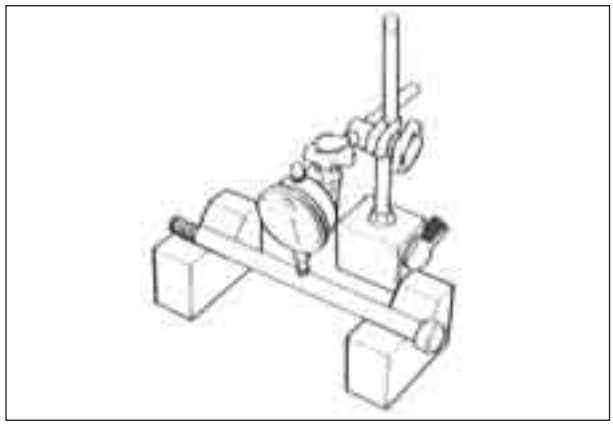

■ WHEEL

Make sure that the wheel runout (axial and radial) does not exceed the service limit when checked as shown.
An excessive amount of runout is usually due to worn or loose wheel bearings and can be corrected by replacing the bearings. If bearing replacement fails to reduce the wheel.

Wheel runout (axial and radial)	Service limit
	2.0 mm (0.08 in)

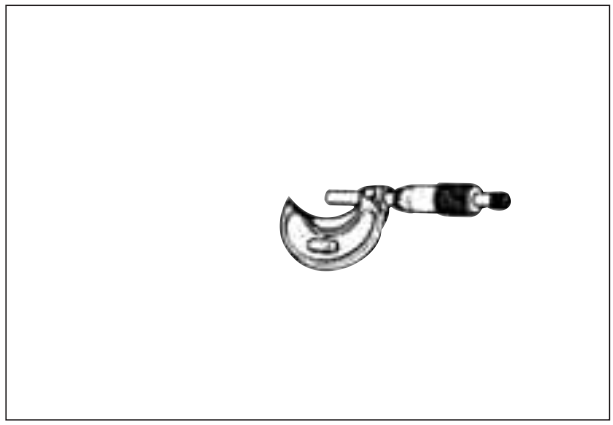

⦿ REASSEMBLY

Reassemble and remount the front wheel in the reverse order of disassembly and removal, and also carry out the following steps :

■ WHEEL BEARING

- Apply grease to the bearing before installing.
  Super grease "A"
- Install the wheel bearings by using the special tool.
  TOOL **Bearing installer : 09913-75820**

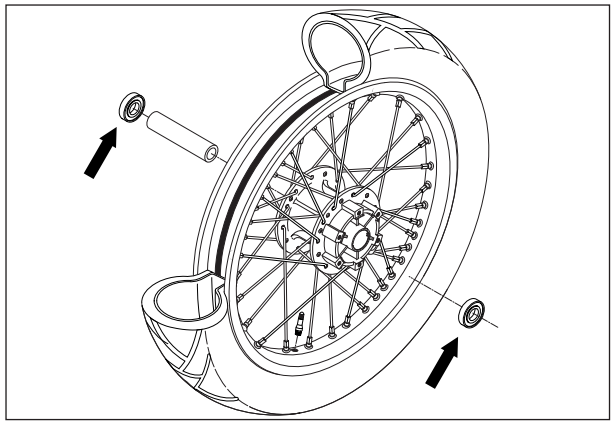

■ **BRAKE DISC**

Make sure that the brake disc is clean and free of any greasy matter.

● Apply THREAD LOCK "1324" to the disc mounting bolts and tighten them to the specified torque.

THREAD LOCK "1324"

Brake disc bolt : 18~28 N · m (1.8 ~2.8 kg · m)

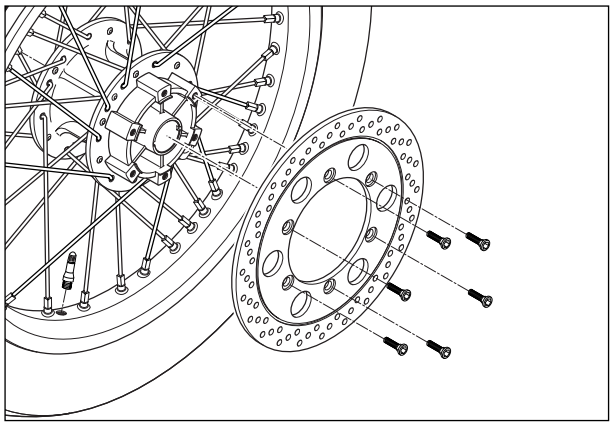

FRONT BRAKE

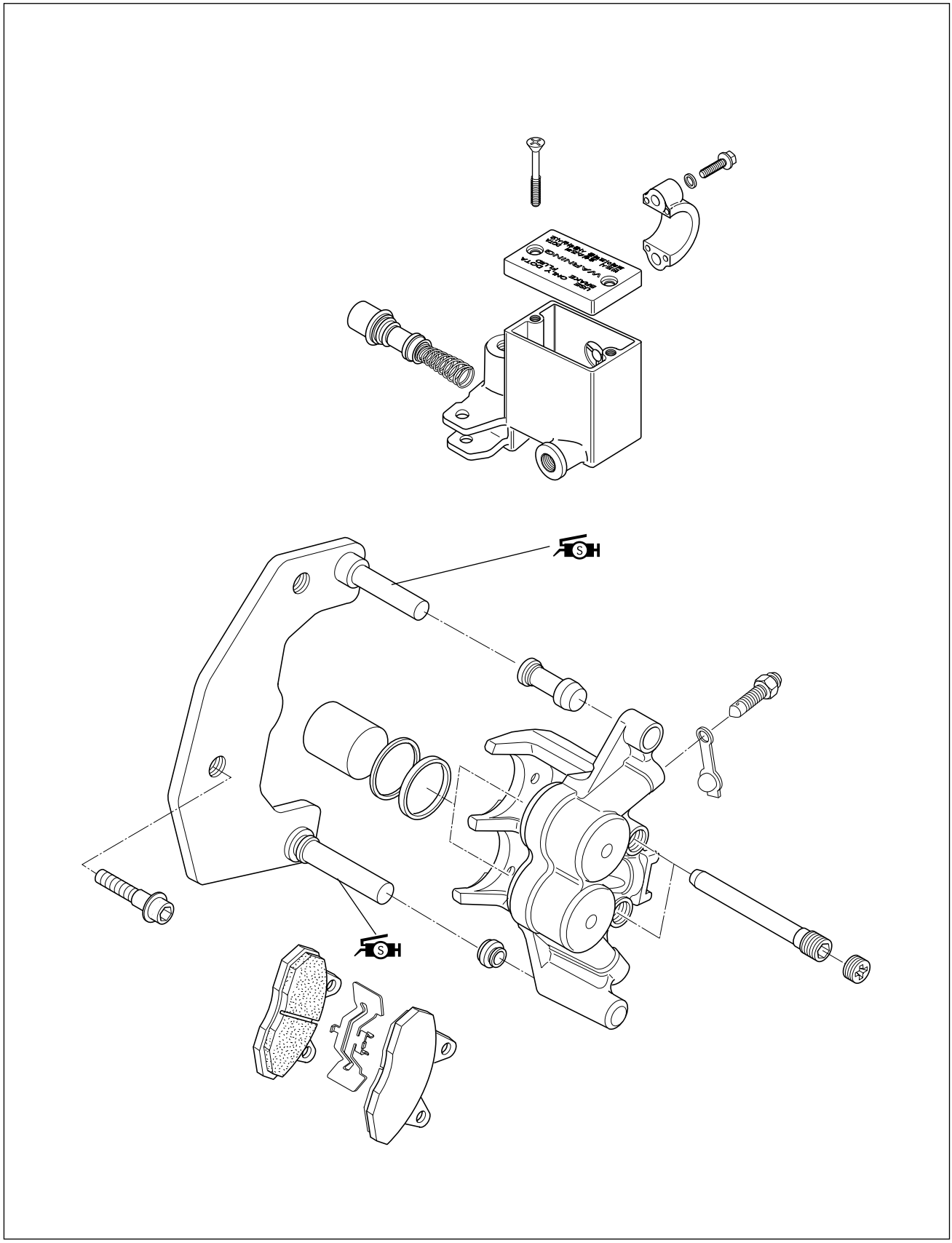

BRAKE PAD REPLACEMENT

- Remove the caliper mounting bolts and take off the caliper.

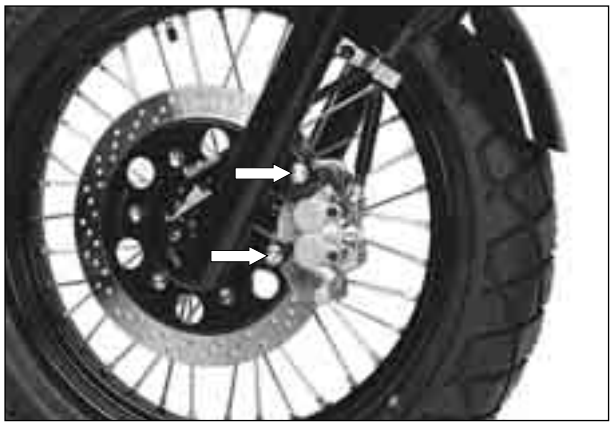

⚠ CAUTION

Do not operate the brake lever while dismounting the caliper.

- Push the piston and caliper holder all the way to the caliper when removing the pad.

- Remove the pad.

⚠ CAUTION

Replace the brake pad with a set, otherwise braking performance will be adversely affected.

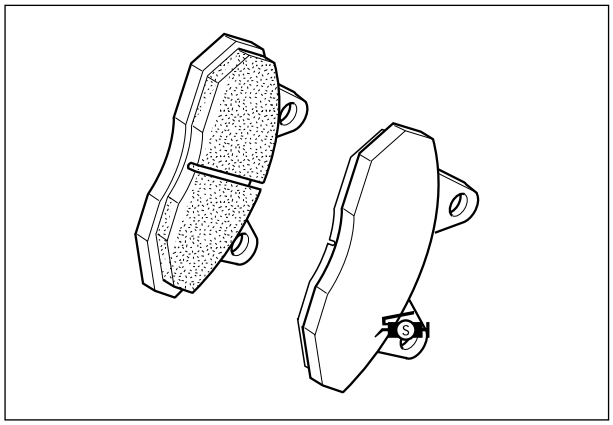

- Apply the silicone grease to the caliper holder.
  Silicone gerase.
- Push in the piston and piston holder all the way to the caliper when remounting the caliper.
- Tighten the caliper mounting bolts with specified torque.

  Caliper mounting bolts : 18~28 N · m (1.8~2.8 kg · m)

⊙ CALIPER REMOVAL AND DISASSEMBLY

● Disconnect the brake hose from the caliper and catch the brake fluid in a suitable receptacle.

⚠ CAUTION

Do not allow brake fluid to contact the paint surface, plastic or rubber parts, or its chemical reaction can cause discoloration or crack.

● Remove the caliper mounting bolts and take off the caliper.
● Remove the brake pad.
● Remove the caliper holder ① from the caliper.

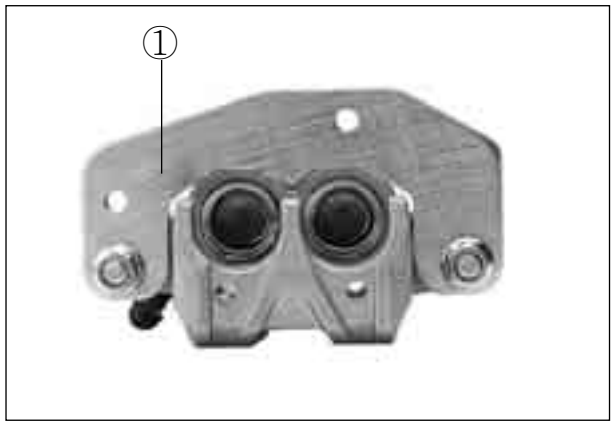

● Using an air gun, push out the caliper piston.

⚠ WARNING

- **Place a rag over the piston to prevent it from popping out and flying and keeping hand off the piston.**
- **Be careful of brake fluid which can possibly splash.**
- **Do not use high pressure air but increase the pressure gradually.**

● Remove the dust seal ② and piston seal ③.

⚠ CAUTION

- **Care not to cause scratch on the cylinder bore.**
- **Do not reuse the piston seal and dust seal that have been removed.**

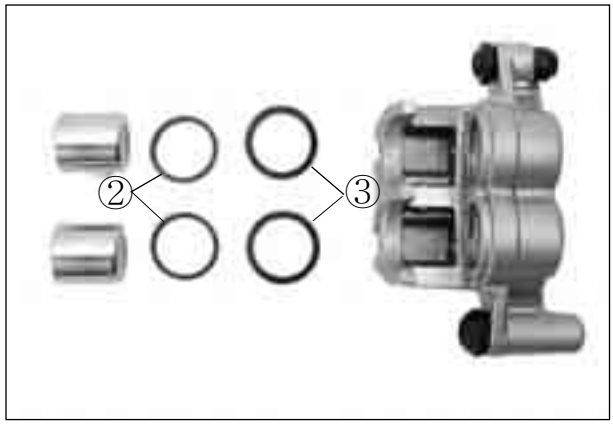

⦿ CALIPER INSPECTION

Inspect the caliper cylinder wall and piston surface for scratch, corrosion or other damages.
If any abnormal condition is noted, replace the caliper.Inspect the each rubber part for damage and wear.

⦿ BRAKE DISC INSPECTION

Check the brake disc for damage or cracks. Measure the thickness using the micrometer.
Replace the brake disc if the thickness is less than the service limit or if damage is found.

TOOL Micrometer (0 ~ 25 mm) : 09900-20201

Brake disc thickness	Service limit
	3.0 mm (0.12 in)

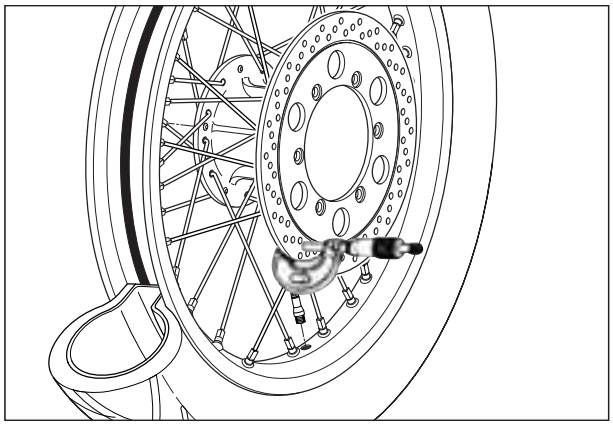

Measure the runout using the dial gauge.
Replace the brake disc if the runout exceeds the service limit.

TOOL Dial gauge : 09900-20606
Magnetic stand : 09900-20701

Brake disc runout	Service limit
	0.3 mm (0.012 in)

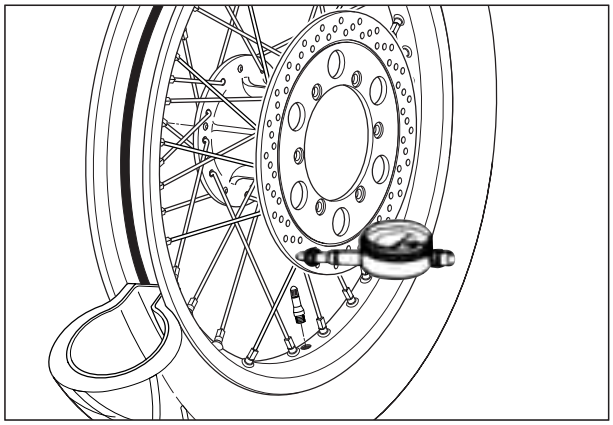

- If measurement exceeds the service limit, replace the brake disc. (Refer to page 6-2)

⦿ CALIPER REASSEMBLY

Reassemble and remount the caliper in the reverse orders of disassembly and removal, and also carry out the following steps.

⚠ CAUTION

Wash the caliper components with fresh brake fluid before reassembly. Never use cleaning solvent or gasoline to wash them. Apply brake fluid to the caliper bore and all internal parts before inserting into the bore.

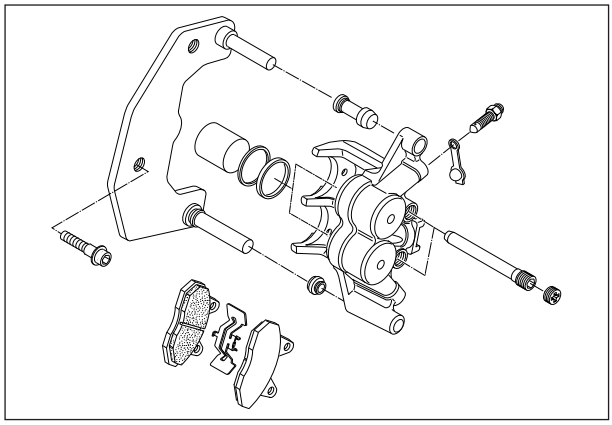

● Apply the silicone grease to the caliper holder.
Silicone grease.

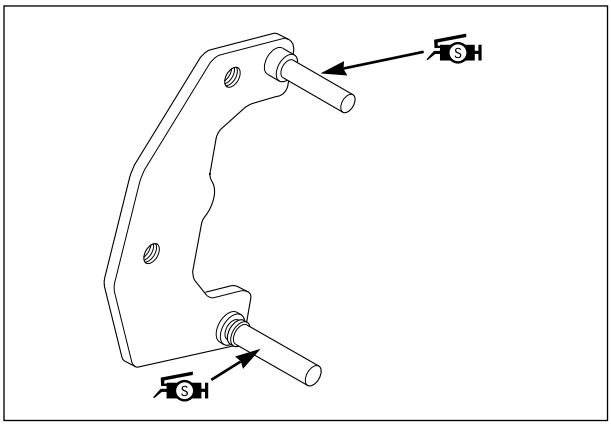

■ **TIGHTENING TORQUE**

Front brake hose union bolt ①
: 20～25 N · m
(2.0～2.5 kg · m)

Front brake caliper mounting bolt ②
: 18～28 N · m
(1.8～2.8 kg · m)

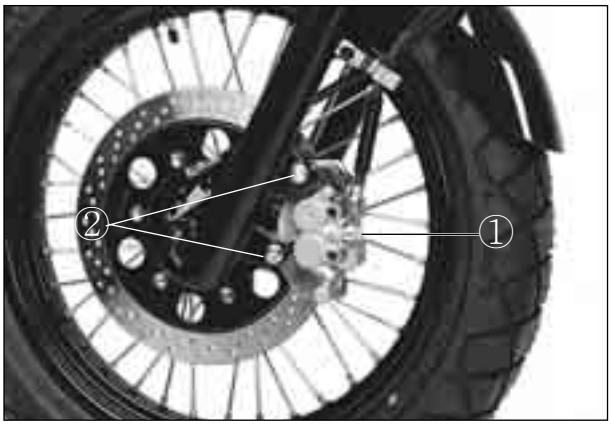

⚠ WARNING

Bleed the air from brake fluid circuit after reassembling the caliper. (See page 2-15)

⊙ MASTER CYLINDER REMOVAL AND DISASSEMBLY

● Please a cloth underneath the union bolt on the master cylinder to prevent spilled drops of the brake fluid. Unscrew the union bolts and disconnect the brake hose from the master cylinder joint.

⚠ CAUTION

Immediately and completely wipe off any brake fluid contacting any part of the motorcycle. The fluid reacts chemically with paint, plastics, rubber materials, etc., and will damage them severely.

● Remove the two clamp bolts and take off the master cylinder.

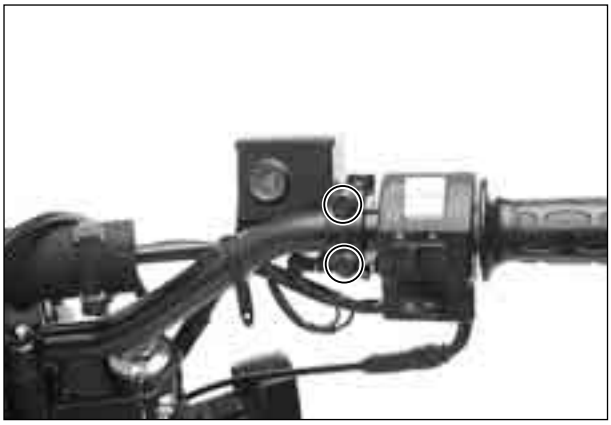

● Remove the two fitting screws and separate the cap and diaphragm.

● Detach the dust seal boot ① and remove the circlip.
● Pull out the piston/cup set ② and spring ③.

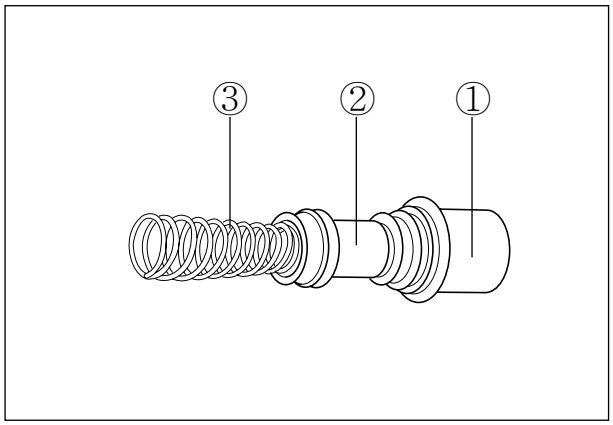

⊙ MASTER CYLINDER INSPECTION

Inspect the master cylinder bore for any scratches or other damage.
Inspect the piston surface for any scratches or other damage.

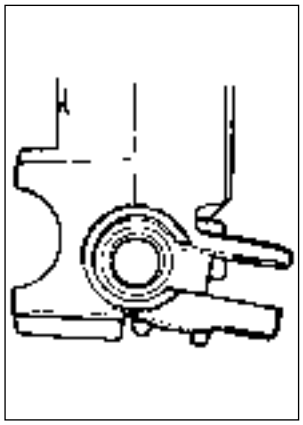

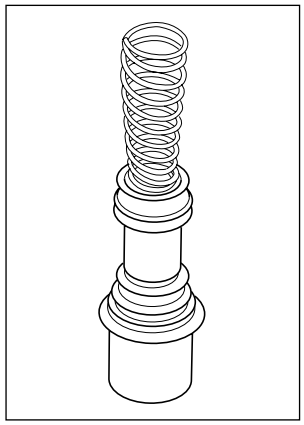

⊙ MASTER CYLINDER REASSEMBLY

Reassemble the master cylinder in the reverse order of disassembly.
Pay attention to the following points :

⚠ CAUTION

- **Wash the master cylider components with new brake fluid before reassembly.**
- **When washing the components, use the specified brake fluid. Never use different types of fluid or cleaning solvents such as gasoline, kerosine, etc.**

BF Specification and Classification
: DOT 3 or DOT 4

- When remounting the master cylinder to the handlebars, first tighten the clamp bolts for upside as shown.

⚠ WARNING

Bleed air from the brake fluid circuit after reassembling master cylinder. (See page 2-15)

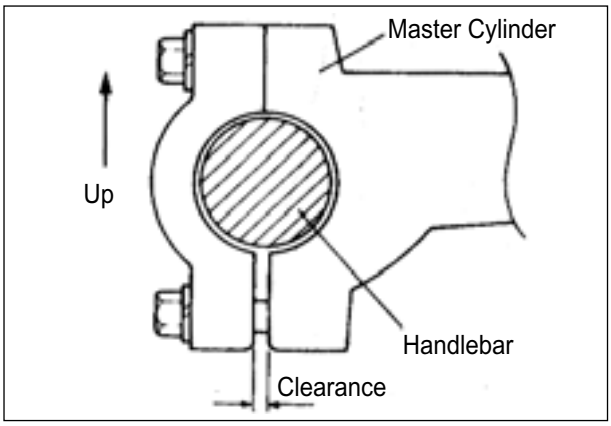

FRONT FORK

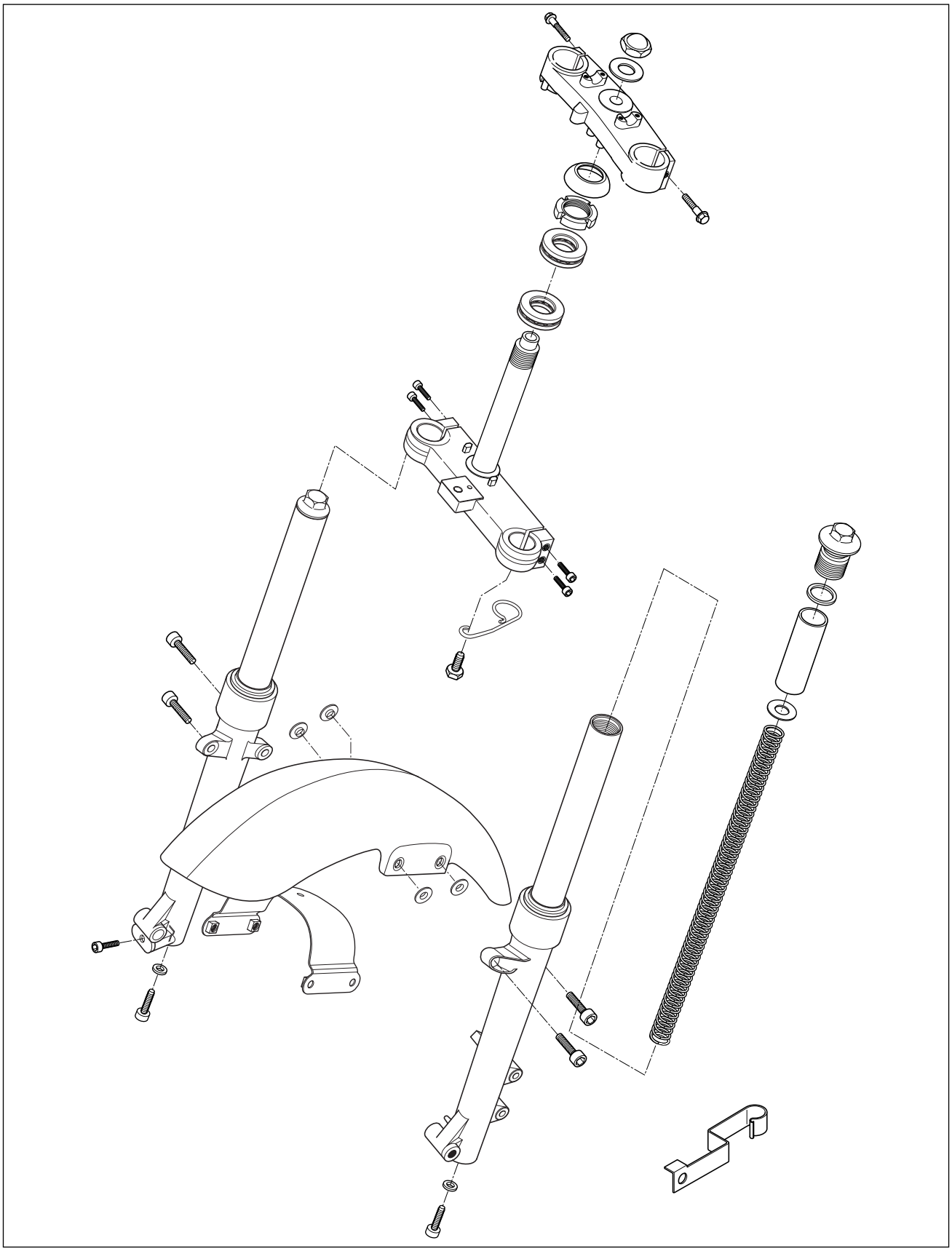

⊙ DISASSEMBLY

- Remove the front wheel. (Refer to page 6-1)
- Remove the front fork after loosening the front fork upper ① and lower ② clamp bolts .

NOTE
Slightly loosen the front fork upper bolt ③ to facilitate next disassembly.

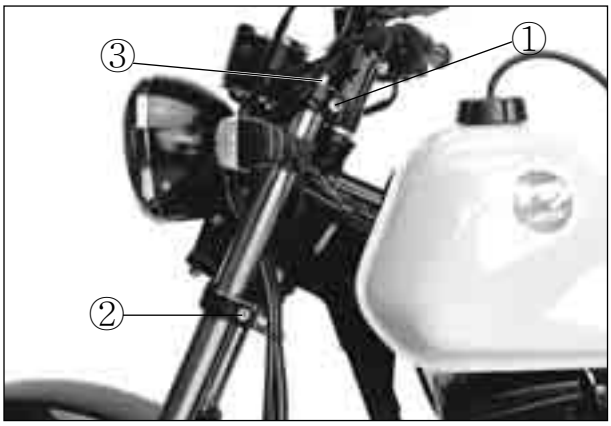

- Remove the front fender.
- Remove the front brake hose clamp and guide.
- Pull down right and left front forks.

- Remove the front fork upper bolt ③, O-ring ④, front fork inner spacer ⑤, spring guide ⑥ and spring ⑦.

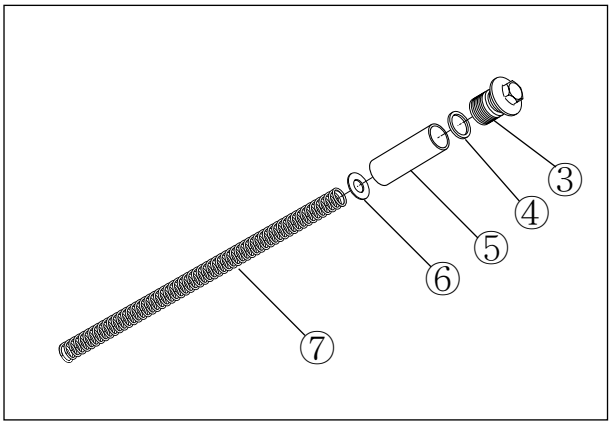

- Invert the front fork and stroke it several times to drain out the fork oil.
- Hold the front fork in the inverted position for a few minutes to allow the fork oil to fully drain.

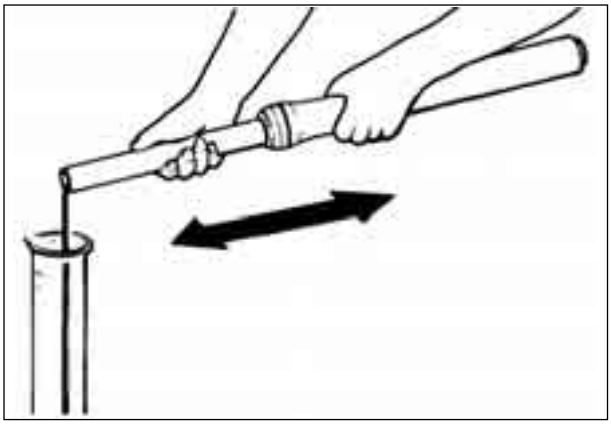

- With the damper rod held immovable, remove the damper rod bolt.
- Remove the damper rod ① and rebound spring ② from the inner tube.

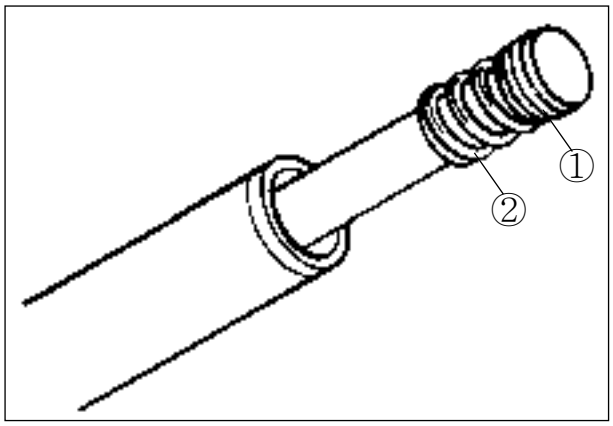

- Remove the dust seal ③ and oil seal stopper ring ④.

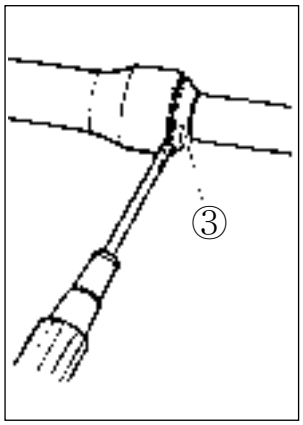

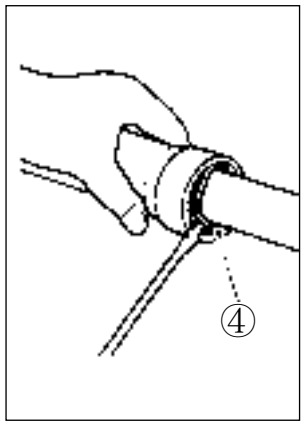

- Separate the inner tube from the outer tube.

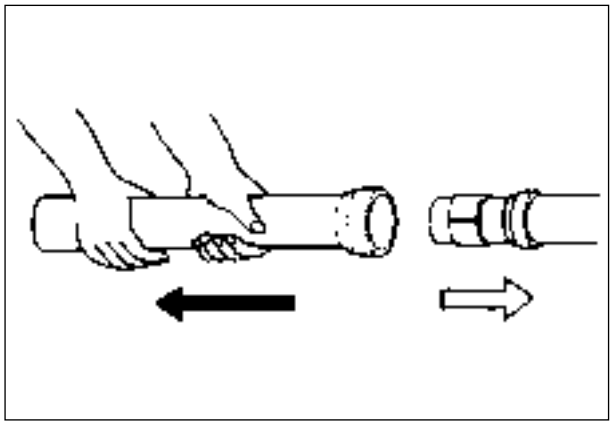

⊙ INSPECTION

■ FRONT FORK SPRING

Measure the free length of the front fork spring Ⓐ.
If the length is found shorter than the service limit, replace the spring.

Front fork spring free length Ⓐ	Standard
	553.7mm (21.8 in)

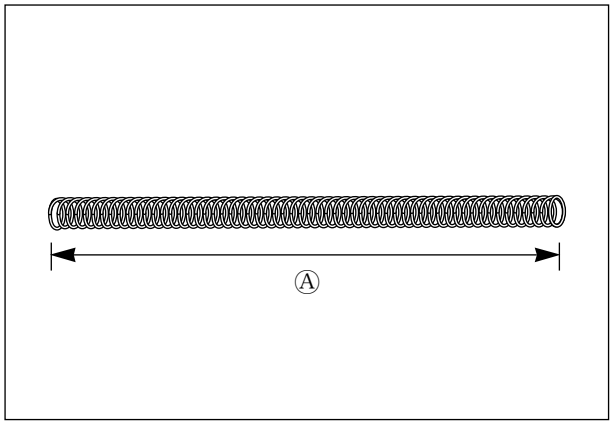

■ **INNER TUBE AND OUTER TUBE**

Check the sliding of the inner tube, outer tube and damper rod ring for scratch, wear, bending, or other abnormal condition.

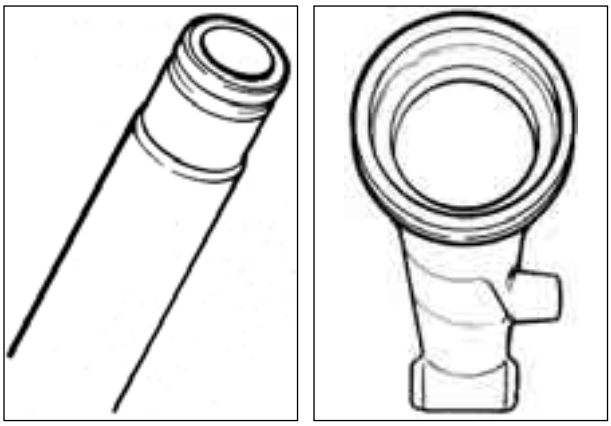

⊙ REASSEMBLY

Perform the reassembly and remounting work in the reverse order of the disassembly and removal procedures while observing the following instructions.

⚠ CAUTION

- **Thoroughly wash all the component parts being assembled. Insufficient washing can result in oil leakage or premature wear of the parts.**
- **When reassembling the front fork, use new fork oil.**
- **Use the specified fork oil for the front fork.**
- **When reassembling, replace the slide metals, oil seal, dust seal and damper rod bolt gasket with new ones.**

- With the oil lock piece fitted to the inner tube, assemble the inner tube to the outer tube.

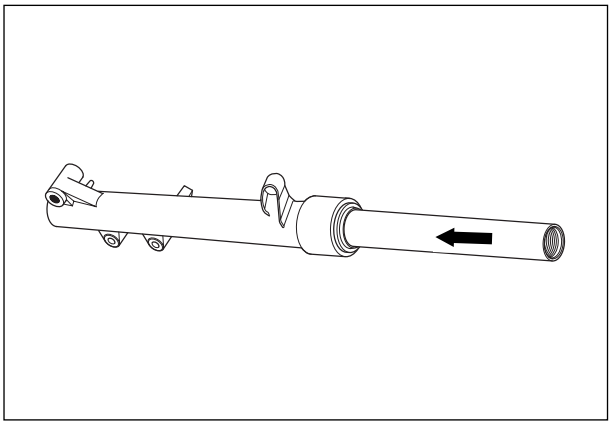

- Fit the rebound spring ② on the damper rod ① and install them together to the inner tube.

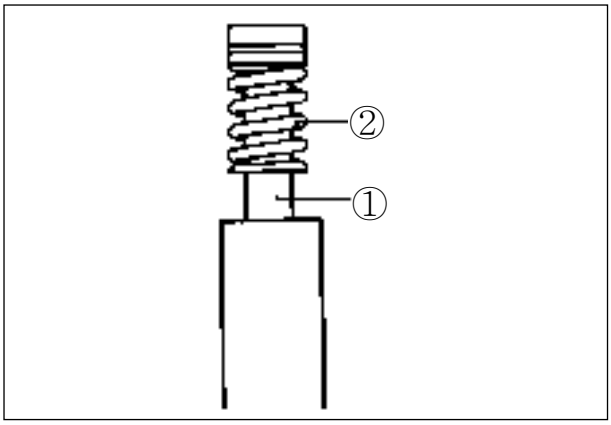

- Apply THREAD LOCK "1324" to the damper rod bolt ②.
- With the damper rod held immovable, with the gasket ··· fitted, tighten the damper rod bolt ②.

Front fork damper rod bolt
: 30~40 N · m (3.0~4.0 kg · m)

THREAD LOCK "1324"

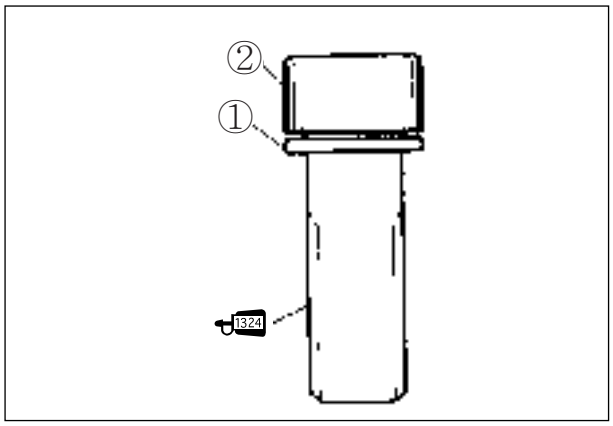

⚠ CAUTION

Replace the gasket with a new one.

■ **FRONT FORK OIL**

- With the inner tube in fully compressed position, pour the specified amount of fork oil and stroke the tube several times to expel air.

Front fork oil specification : TELLUS #22

Front fork oil capacity	Each leg
	215 · 2.5cc

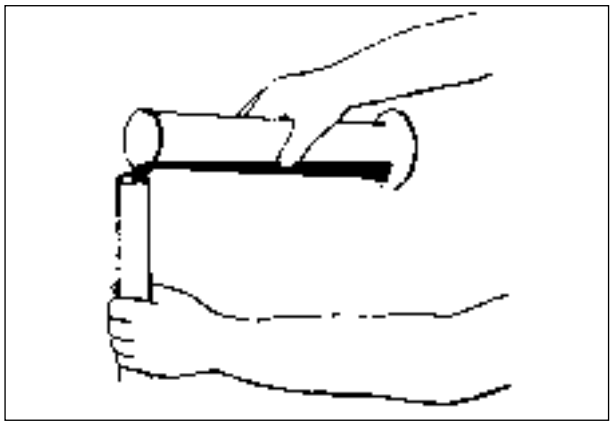

- With the front fork held in vertical position, compress the inner tube all the way.

- Wait until the fluid level stabilizes, measure and adjust the level to specification using the special tool.

Front fork oil level	240 mm (9.5 in)

Front fork oil level gauge : 09943-74111

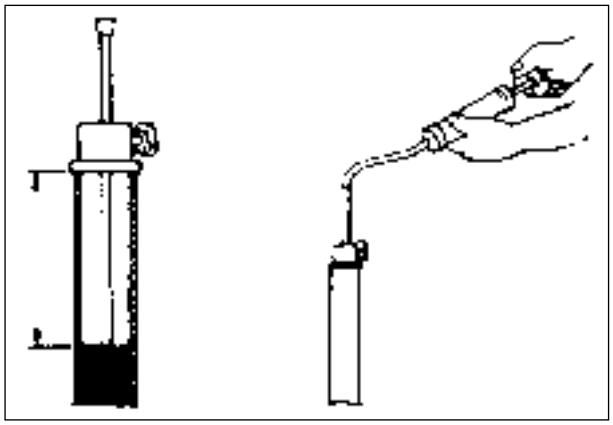

- Install the front fork spring ③.
- Install the spring guide ④, front fork inner spacer ⑤, and O-ring ⑥.

- Fit the O-ring to the front fork upper bolt and apply SUPER GREASE "A".

SUPER GREASE "A"

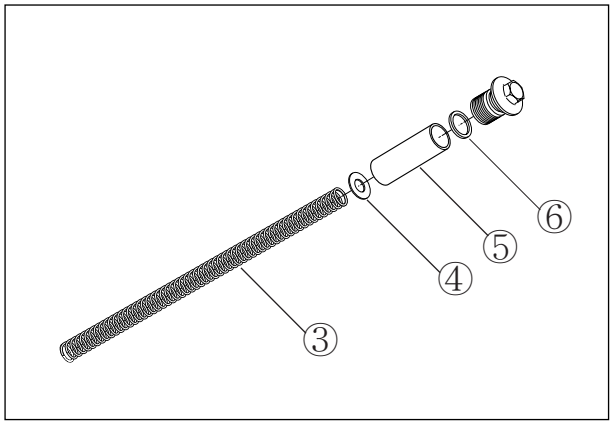

⚠ CAUTION

Use a new O-ring to prevent oil ieakage.

- Install the front fork to the motocycle.
- Align the upper surface of the inner tube with the upper surface of the steering stem upper bracket.

- Tighten the front fork lower clamp bolts ① and front fork upper bolts ② to the specified torque.
- Tighten the front fork upper clamp bolts ③ to the specified torque.

Front fork upper clamp bolt
: 22~35 N · m (2.2~3.5 kg · m)
Front fork lower clamp bolt
: 22~35 N · m (2.2~3.5 kg · m)
Front fork upper bolt
: 22~30 N · m (2.2~3.0 kg · m)

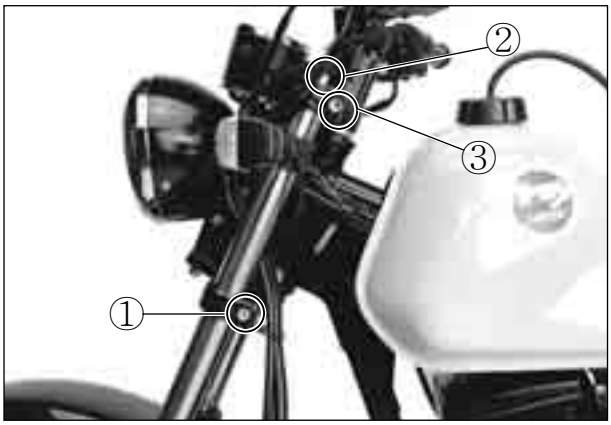

- Install the front fender and tighten the mounting bolts temporarily.
- Install the front wheel. (Refer to page 6-3)
- Install the front brake caliper. (Refer to page 6-8)
- Move the front fork up and down several times.
- Tighten the front fender mounting bolts securely.

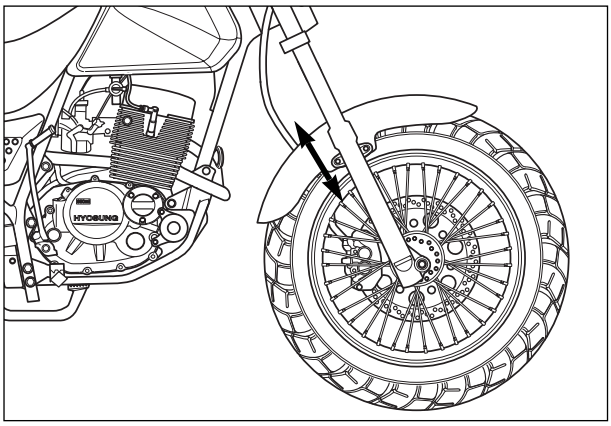

STEERING STEM

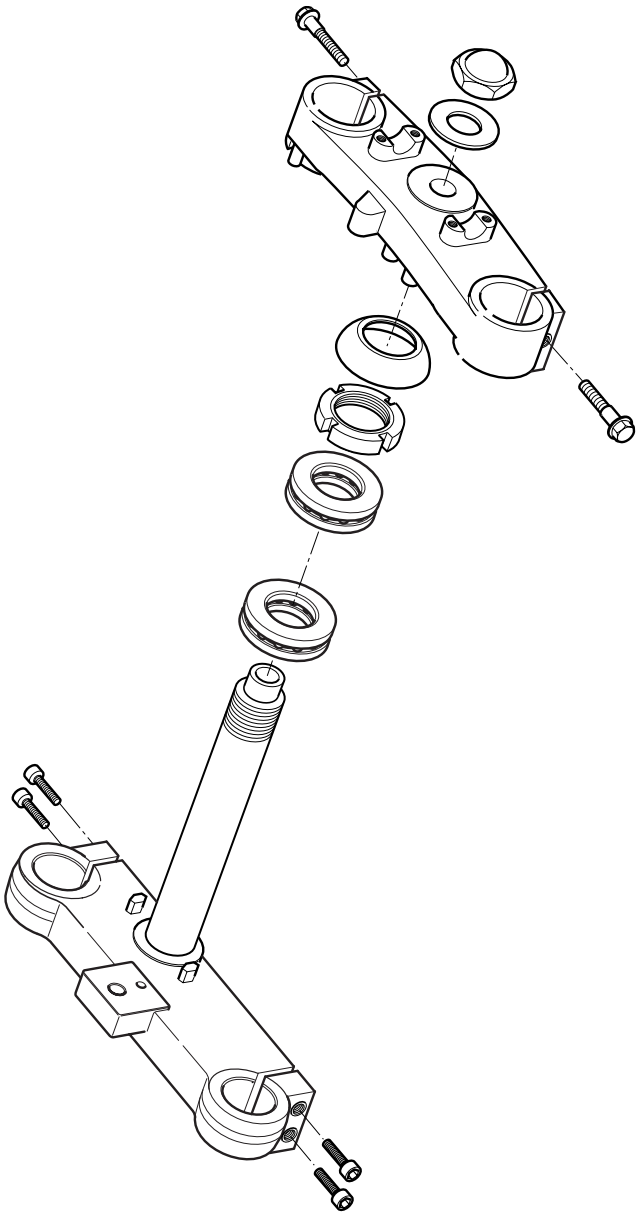

REMOVAL AND DISASSEMBLY

- Take off the front wheel. (See page 6-1)
- Take off the front fork. (See page 6-13)

- Remove the four bolts and front fender.

- Remove the handlebar clamp bolts.
- Remove the steering stem head bolt and take off the steering stem upper nut.

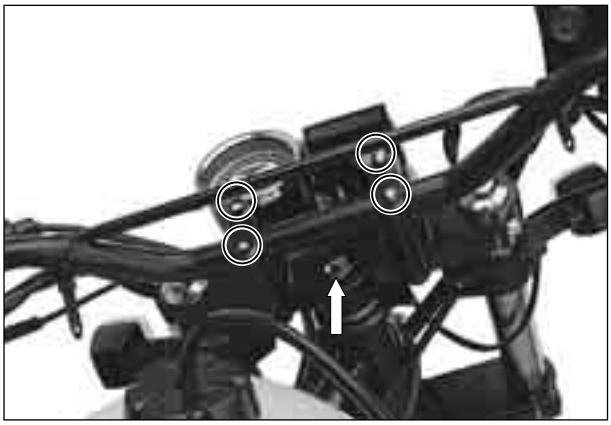

- Remove the steering stem nut and draw out the steering stem.

  TOOL Clamp wrench : 09940-10122

- Draw out the steering stem lower bracket.

⚠ CAUTION

Hold the steering stem lower bracket by hand to prevent from falling.

- Remove the upper and lower bearing.

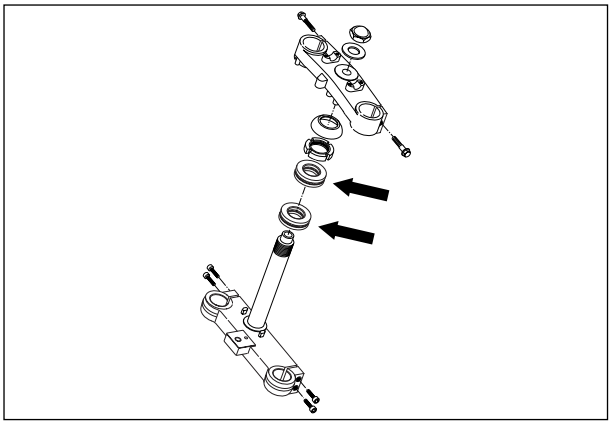

● Remove the outer race fitted on the steering stem. This can be done with a chisel.

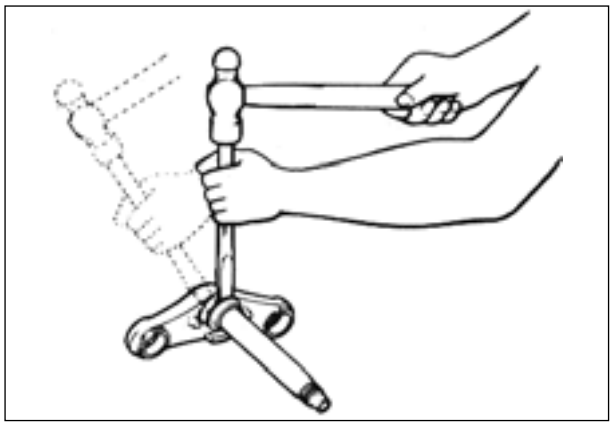

● Draw out the two inner races fitted to the top and bottem ends of the head pipe.

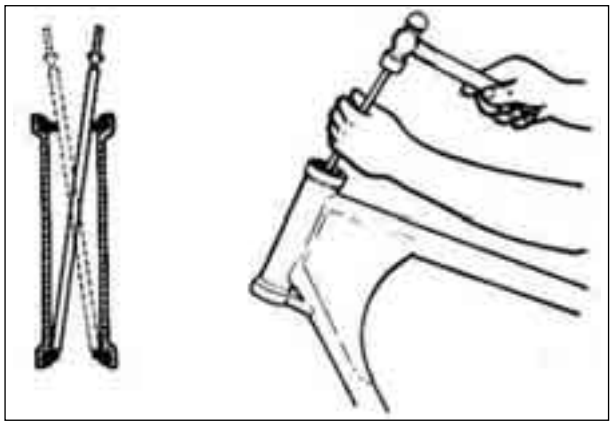

⦿ INSPECTION

Inspect and check the removed parts for the following abnormalities.

· Handlebar distortion.
· Handlebar clamp wear.
· Abnormality operation of bearing.
· Worn or damaged steel balls.
· Distortion of steering stem.

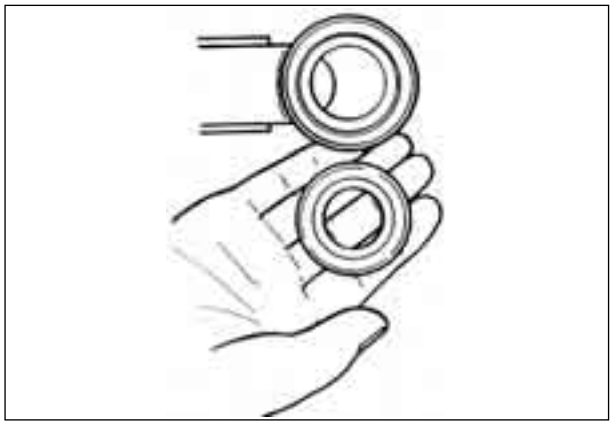

⦿ REASSEMBLY

Reassemble and remount the steering stem in the reverse order of disassembly and removal, and also carry out the following steps :

■ INNER RACES

Press in the upper and lower inner races using the special tool.

TOOL **Steering race installer : 09941-34513**

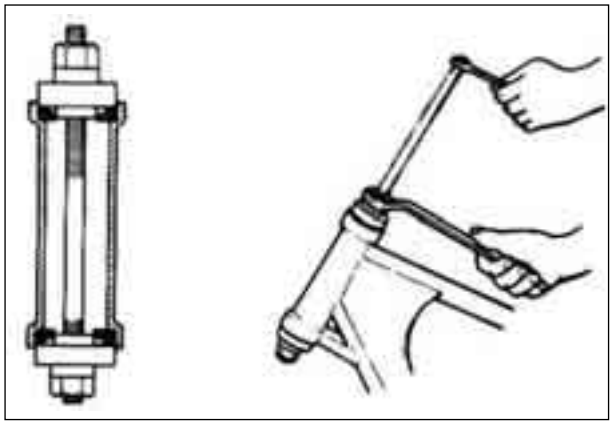

● Apply SUPER GREASE "A" to the upper bearing, lower bearing

SUPER GREASE A

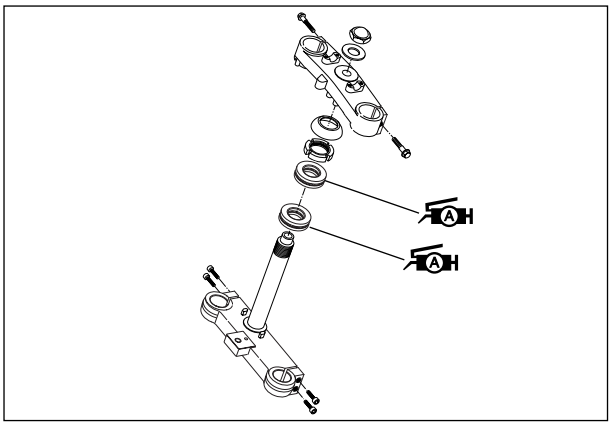

■ **STEERING STEM NUT**

● Tighten the steering stem nut with the special tool.

Clamp wrench : 09940-10122

Steering stem nut

: 80~100 N · m (8.0~10.0kg · m)

● Turn the steering stem right and left, lock-to-lock, five or six times.

● Tighten the steering stem head nut to the specified torque.

Steering stem head nut : 80~100 N · m (8.0~10.0 kg · m)

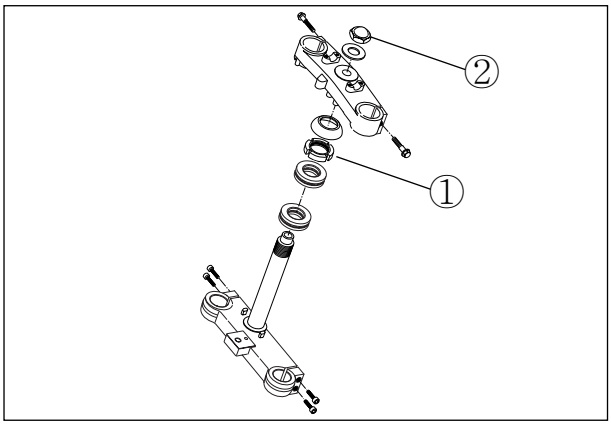

⚠ CAUTION

After performing the adjustment and installing the steering stem upper bracket, "rock" the front wheel assembly forward and backward to ensure that there is no play and that the procedure was accomplished correctly. If play is noticeable, re-adjust the steering stem nut.

■ **HANDLEBAR**

● Set the handlebar to match its punched mark to the mating face of the holder.

● Secure the each handlebar clamp in such a way that the clearances ahead of and behind the handlebar should be equalized.

Handlebar clamp bolts

: 18~28 N · m (1.8~2.8 kg · m)

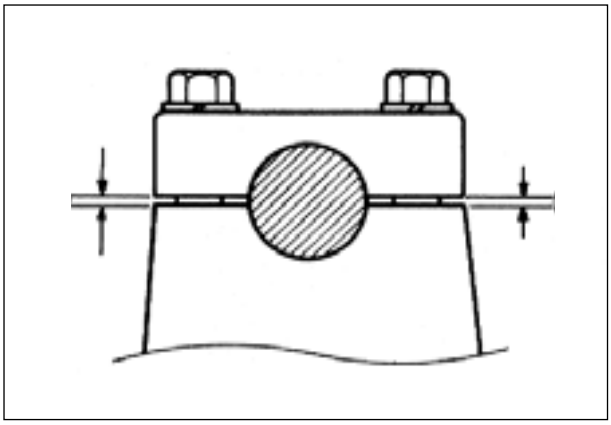

REAR WHEEL AND REAR BRAKE

⦿ REMOVAL

- Support the machine by jack or block.
- Pull out the cotter pin and remove the torque link nut and bolt.
- Remove the rear brake adjuster nut.

- Remove the drive chain cover.
- Loosen the rear axle nut.
- Loosen the drive chain adjuster ··· right and left.
- Disengage the drive chain from the rear sprocket.
- Draw out the axle shaft and take off the rear wheel.
- Separate the rear wheel from rear brake panel.

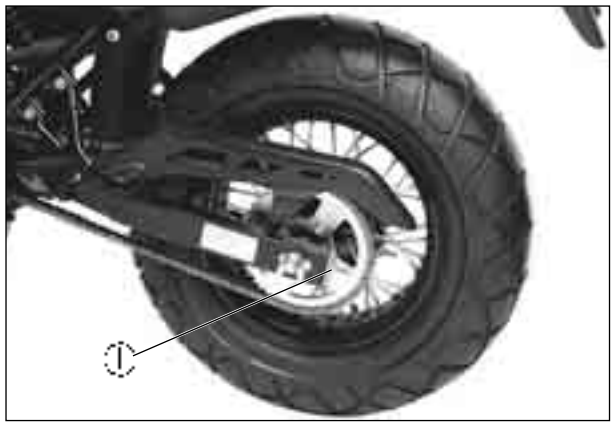

⊙ DISASSEMBLY

■ REAR WHEEL

- Flatten the washers and loosen the four nuts.
- Separate the rear sprocket from the rear wheel.

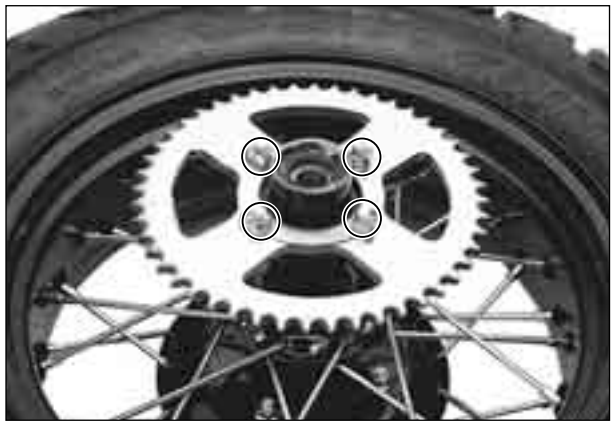

- Remove the right and left side wheel bearings.

⚠ CAUTION

Removing the left side bearing first makes the job easier.

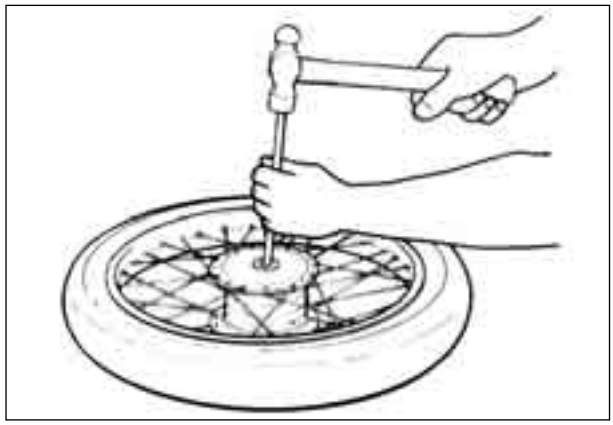

■ REAR BRAKE

- Take off the brake shoes.

- Loosen the cam lever nut.
- Pull off the brake cam, washer, O-ring and cam lever.

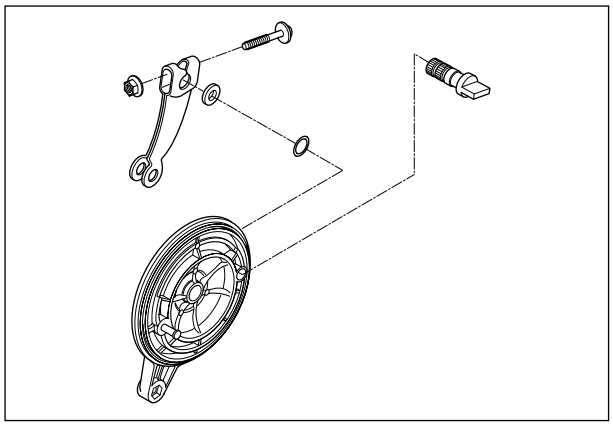

⊙ INSPECTION

WHEEL AXLE : Refer to page 6-3
WHEEL : Refer to page 6-3
WHEEL BEARING : Refer to page 6-3
TIRE : Refer to page 2-17

■ SPROCKET

Inspect the sprocket's teeth for wear. If they are worn, replace the sprocket and drive chain as a set.

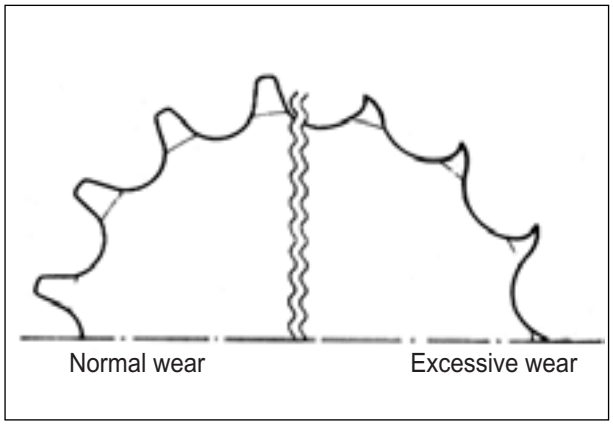

■ BRAKE DRUM

Inspect the brake drum and measure the brake drum I.D. to determine the extent of wear. Replace the brake drum if the measurement exceeds the service limit. The value of this limit is indicated inside the brake drum.

TOOL Vernier calipers : 09900-20101

Brake drum I.D.	Service limit
	130.7 mm (5.15 in)

■ **BRAKE SHOE**

Check the brake shoes and decide whether it should be replaced or not from the thickness of the brake shoe linings.

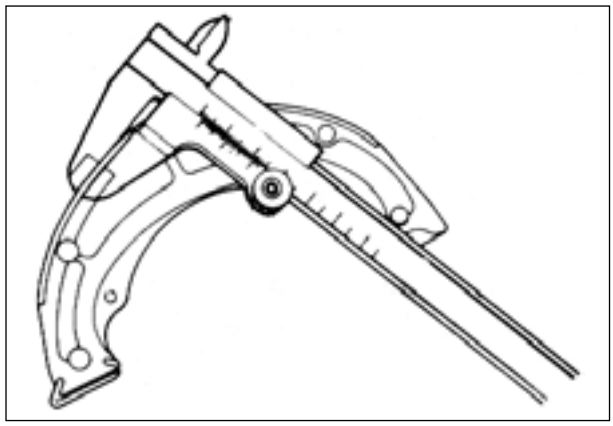

⚠ CAUTION

Replace the brake shoes as a set, otherwise braking performance will be adversely affected.

Thickness of brake shoe	Service limit
	1.5 mm (0.06 in)

REASSEMBLY

Reassemble and remount the rear wheel and rear brake in the reverse order of disassembly and removal, and also carry out the following steps :

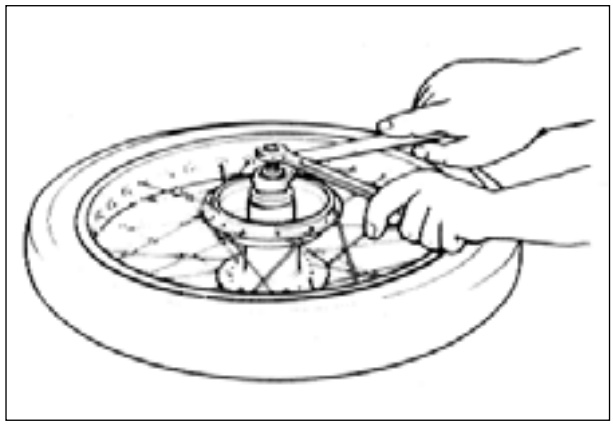

■ **WHEEL BEARING**

- Apply grease to the bearings before installling
  Super grease "A"
- Install the wheel bearings by using the special tool.

⚠ CAUTION

First install the wheel bearing for right side.

TOOL Bearing installer set : 09924-84510

■ **SPROCKET**

- After tightening the four nuts to specification, bend the washers to lock nuts.
  Rear sprocket nut : 20~30 N · m (2.0~3.0 kg · m)

■ **BRAKE CAM**

Apply grease to the brake cam.
Super grease "A"

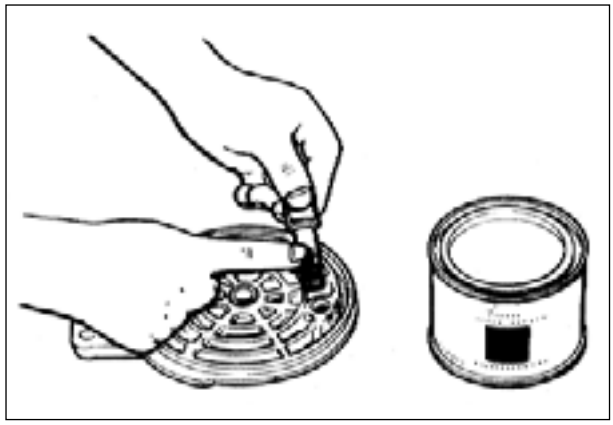

⚠ CAUTION

Be careful not to apply too much grease to the brake cam shaft. If grease gets on the lining, brake slippage will result.

■ **BRAKE CAM LEVER**

Tighten the cam lever bolt with specified torque.

Brake cam lever nut

: 8~12 N・m (0.8~1.2 kg・m)

⚠ CAUTION

Adjust the rear brake pedal play after installation of the rear wheel.

REAR SHOCK ABSORBER

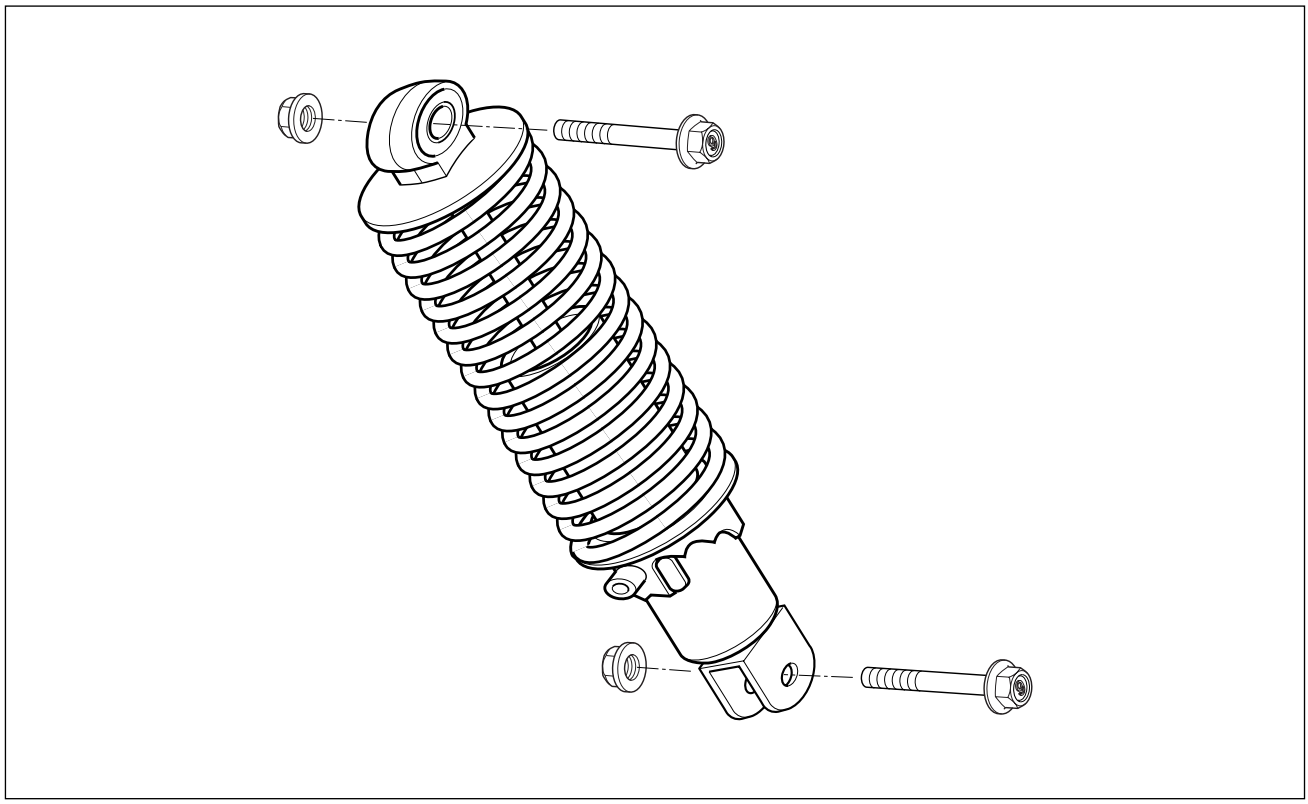

⊙ REMOVAL

● Remove the rear shock absorber by removing their nuts.

⊙ INSPECTION

Inspect the rear shock absorber for damage and oil leakage. If any defects are found, replace the rear shock absorber with a new one.

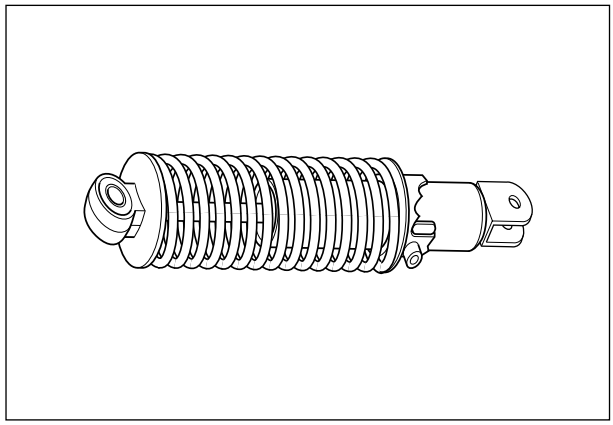

⚠ CAUTION

Do not attempt to disassemble the rear shock absorber. It is unserviceable.

⊙ REMOUNTING

● Install the rear shock absorber and tighten the nuts to the specified torque.

Shock absorber mounting nut (upper)
: 40~60 N・m (4.0~6.0 kg・m)

Shock absorber mounting nut (lower)
: 40~60 N・m (4.0~6.0 kg・m)

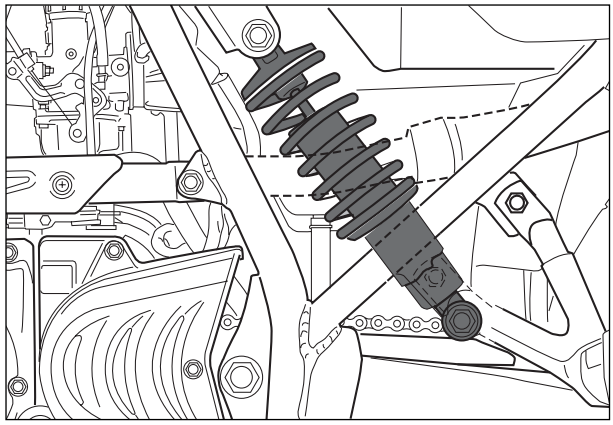

SWINGARM

⊙ REMOVAL AND DISASSEMBLY

- Remove the rear wheel. (See page 6-22)
- Remove the rear shock absorber fitting nut and bolt. (See page 6-27)
- Remove the swing arm pivot nut.
- Draw out the pivot shaft and take off the swing arm.

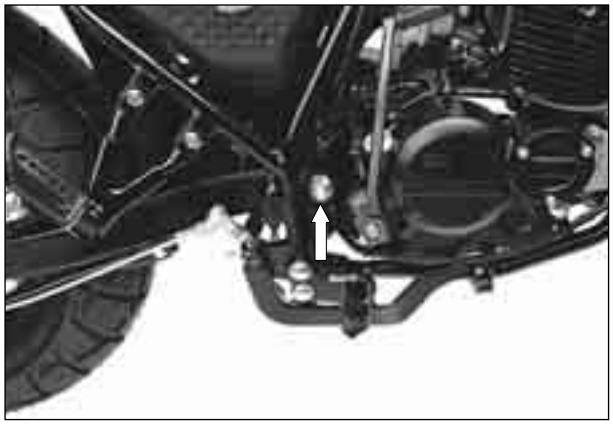

- Remove the chain case.
- Remove the two spacers ①.
- Remove the two bearings ②. by using the special tools.

  Bearing remover (17 mm) : 09923-73210
  Rotor remover sliding shaft : 09930-30102

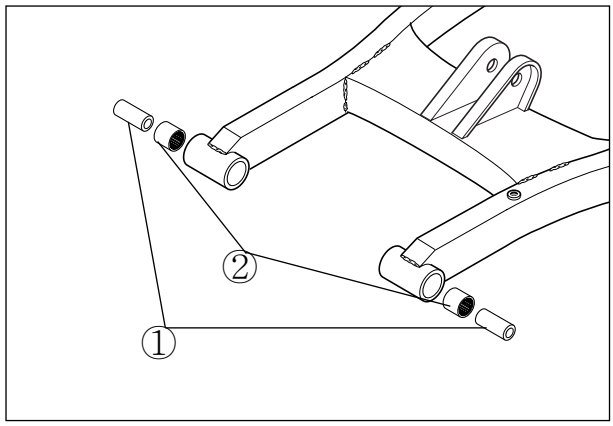

INSPECTION

■ SWINGARM PIVOT SHAFT

Measure the pivot shaft runout using the dial gauge. If the pivot shaft exceeds the service limit, replace it with a new one.

Dial gauge : 09900-20606
Magnetic stand : 09900-20701
V-block : 09900-21304

Swingarm pivot shaft runout	Service limit
	0.6mm (0.024 in)

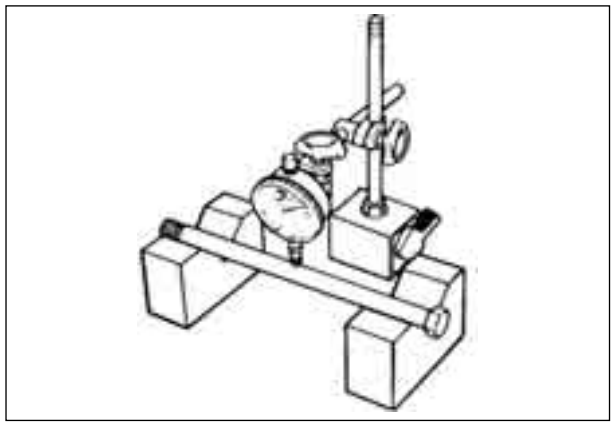

REASSEMBLY

Reassemble and remount the swing arm in the reverse order of disassembly and removal, and also carry out the following steps:

■ SWING ARM SPACER

Force-fit the spacers into the swing arm by using the special tool.

Bearing installer set : 09924-84510

- Apply grease to the spacer when installing.

  Super grease "A"

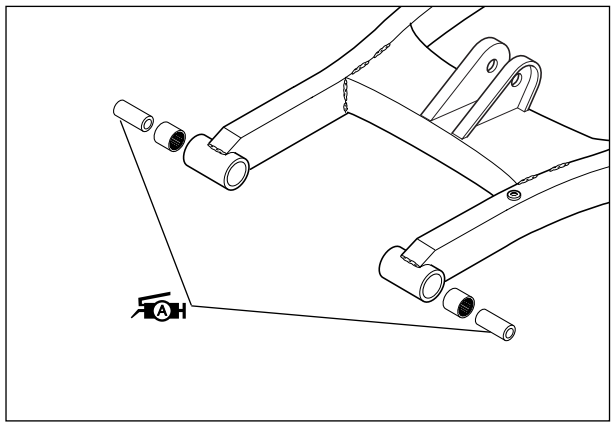

SERVICING INFORMATION

CONTENTS

TROUBLESHOOTING 7-1

SPECIAL TOOLS 7-8

TIGHTENING TORQUE 7-11

SERVICE DATA 7-13

WIRE AND CABLE ROUTING 7-19

WIRING DIAGRAM 7-22

TROUBLESHOOTING

ENGINE

Complaint	Symptom and possible causes	Remedy
Engine will not start, or is hard to start.	**Compression too low**	
	1. Valve clearance out of adjustment.	Adjust.
	2. Worn valve guides or poor seating of valves.	Repair or replace.
	3. Valves mistiming	Adjust.
	4. Piston rings excessively worn.	Replace.
	5. Worn-down cylinder bore.	Replace or rebore.
	6. Poor seating of spark plug.	Retighten.
	7. Starter motor cranks but too slowly.	Consult "electrical complaints"
	Plug not sparking	
	1. Fouled spark plug.	Clean or replace.
	2. Wet spark plug.	Clean and dry.
	3. Defective ignition coil.	Replace.
	4. Open or short circuit in high tension cord.	Replace..
	No fuel reaching the carburetor	
	1. Clogged hole in the fuel tank cap.	Clean.
	2. Clogged or defective fuel cock.	Clean or replace.
	3. Defective carburetor float valve.	Replace.
	4. Clogged fuel pipe.	Clean or replace.
Engine stalls easily.	1. Fouled spark plug.	Clean.
	2. Clogged fuel hose.	Clean.
	3. Clogged jets in carburetor.	Clean.
	4. Valve clearance out of adjustment.	Adjust.
Noisy engine.	**Excessive valve chatter**	
	1. Valve clearance too large.	Adjust.
	2. Weakened or broken valve springs.	Replace.
	3. Worn down rocker arm or rocker arm shaft.	Replace.
	Noise appears to come from piston	
	1. Piston or cylinder worn down.	Replace.
	2. Weakened or broken valve springs.	Replace.
	3. Worn down rocker arm or rocker arm shaft.	Replace.
	4. Piston rings or ring groove worn.	Replace.
	Noise seems to come from timing chain	
	1. Stretched chain.	Replace.
	2. Worn sprockets.	Replace.
	3. Tension adjuster not working.	Repair or replace.
	Noise seems to come from clutch	
	1. Worn splines of countershaft or hub.	Replace.
	2. Worn teeth of cluth plates.	Replace.
	3. Distorted clutch plates, driven and drive.	Replace.
	Noise seems to come from crankshaft	
	1. Worn or broken bearings.	Replace.
	2. Big-end bearings worn and broken.	Replace.
	3. Thrust clearance too large.	Replace.

Complaint	Symptom and possible causes	Remedy
Noisy engine.	**Noise seems to come from transmission** 1. Gears worn or rubbing. 2. Badly worn splines. 3. Primary gears worn or rubbing. 3. Badly worn bearings.	 Replace. Replace. Replace. Replace.
Slipping clutch.	1. Clutch control out of adjustment or too much play. 2. Weakened clutch springs. 3. Worn or distorted pressure plate. 4. Distorted clutch plates, driven and drive.	Adjust. Replace. Replace. Replace.
Dragging clutch.	1. Clutch control out of adjustment or too much play. 2. Weakened clutch springs. 3. Distorted clutch plates, driven and drive.	Adjust. Replace. Replace.
Transmission will not shift.	1. Broken gearshift cam. 2. Distorted gearshift forks. 3. Worn gearshift pawl.	Replace. Replace. Replace.
Transmission will not shift back.	1. Broken return spring on shift shaft. 2. Shift shafts are rubbing or sticky. 3. Distorted or worn gearshift forks.	Replace. Repair. Replace.
Transmission jumps out of gear.	1. Worn shifting gears on driveshaft or countershaft. 2. Distorted or worn gearshift forks. 3. Weakened stopper pawl spring on gearshift cam. 4. Worn gearshift pawl.	Replace. Replace. Replace. Replace.
Engine idles poorly.	1. Valve clearance out of adjustment. 2. Poor seating of valves. 3. Defective valve guides. 4. Worn rocker arm or arm shaft. 5. Spark plug gap too wide. 6. Defective ignition coil resulting in weak sparking. 7. Float-chamber fuel level out of adjustment in carburetor. 8. Clogged jets.	Adjust. Replace. Replace. Replace. Adjust or replace. Replace. Adjust. Clean.
Engine runs poorly in high speed range.	1. Valve springs weakened. 2. Valve timing out of adjustment. 3. Worn cams or rocker arms. 4. Spark plug gap too narrow. 5. Defective ignition coil. 6. Float-chamber fuel level too low. 7. Clogged air cleaner element. 8. Clogged fuel pipe, resulting in inadequate fuel supply to carburetor.	Replace. Adjust. Replace. Repair. Replace. Adjust . Clean. Clean or replace.
Dirty or heavy exhaust smoke.	1. Too much engine oil in the engine. 2. Worn piston rings or cylinder. 3. Worn valve guides. 4. Cylinder wall scored or scuffed. 5. Worn valves stems. 6. Defective stem seals. 7. Worn side rails.	Check with inspection window, drain out excess oil. Replace. Replace. Replace. Replace. Replace. Replace.

Complaint	Symptom and possible causes	Remedy
Engine lacks power.	1. Loosen of valve clearance. 2. Weakened valve springs. 3. Valve timing out of adjustment. 4. Worn piston ring or cylinder. 5. Poor seating of valves. 6. Fouled spark plug. 7. Worn rocker arms or its shafts. 8. Spark plug gap incorrect. 9. Clogged jets in carburetor. 10. Float-chamber fuel level out of adjustment. 11. Clogged air cleaner element. 12. Too much enging oil. 13. Defective air intake pipe.	Adjust. Replace. Adjust. Replace. Repair or replace. Clean or replace. Replace. Adjust or replace. Clean. Adjust. Clean. Drain out excess oil. Retighten or replace.
Engine overheats.	1. Heavy carbon deposit on piston head. 2. Not enough oil in the engine. 3. Defective oil pump or clogged oil circuit. 4. Fuel level too low in float chamber. 5. Air leak from intake pipe. 6. Use of incrrect engine oil. 7. Defective oil cooler.	Clean. Add oil. Repair or clean. Adjust. Retighten or replace. change. Clean or replace.

CARBURETOR

Complaint	Symptom and possible causes	Remedy
Trouble with starting.	1. Starter jet is clogged. 2. Starter pipe is clogged. 3. Air leaking from a joint between starter body and carburetor. 4. Starter plunger is not operating properly.	Clean. Clean. Check starter body and carburetor for tightness, adjust and replace gasket. Check and adjust.
Idling or low-speed trouble.	1. Pilot jet, pilot air jet are clogged or loose. 2. Pilot outlet or bypass is clogged. 3. Starter plunger is not fully closed.	Check and clean. Check and clean. Check and clean.
Medium-or high speed trouble.	1. Main jet or main air jet is clogged. 2. Needle jet is clogged. 3. Throttle valve is not operating properly. 4. Filter is clogged.	Check and clean. Check and clean. Check throttle valve for operation. Check and clean.
Overflow and fuel level fluctuations.	1. Needle valve is worn or damaged. 2. Spring in needle valve is borken. 3. Float is not working properly. 4. Foreign matter has adhered to needle valve. 5. Fuel level is too high or low.	Replace. Replace. Check and adjust. Clean. Adjust float height.

ELECTRICAL

Complaint	Symptom and possible causes	Remedy
No sparking or poor sparking.	1. Defective ignition coil. 2. Defective spark plug. 3. Defective CDI unit.	Replace. Replace. Replace.
Spark plug soon become fouled with carbon.	1. Mixture too rich. 2. Idling speed set too high. 3. Incorrect gasoline. 4. Dirty element in air cleaner. 5. Spark plug too cold.	Adjust carburetor. Adjust carburetor. Change. Clean or replace. Replace by hot type plug.
Spark plug become fouled too soon.	1. Worn piston rings. 2. Pistons or cylinder worn. 3. Excessive clearance of valve stems in valve guides. 4. Worn stem oil seal.	Replace. Replace. Replace. Replace.
Spark plug electrodes overheat or burn.	1. Spark plug too hot. 2. The engine overheats. 3. Spark plug loose. 4. Mixture too lean.	Replace by cold type plug. Tune up. Retighten. Adjust carburetor.
Generator charge, but charging rate is below the specification.	1. Lead wires tend to get shorted or open-circuited or loosely connected at terminals. 2. Grounded or open-circuited stator coils of generator. 3. Defective regulator/rectifier. 4. Not enough electrolyte in the battery. 5. Defective cell plates in the battery.	Repair or retighten. Replace. Replace. Add distilled water between the level lines. Replace the battery.
Generator overcharges.	1. Internal short-circuit in the battery. 2. Resistor element in the regulator/rectifier damaged or defective. 3. Regulator/rectifier poorly grounded.	Replace the battery. Replace. Clean and tighten ground connection.
Unstable charging.	1. Lead wire insulation frayed due to vibration resulting in intermittent shorting. 2. Generator internally shorted. 3. Defective regulator/rectifier.	Repair or replace Replace. Replace.
Starter button is not effective.	1. Battery run down. 2. Defective switch contacts. 3. Brushes not seating properly on commutator in starter motor. 4. Defective starter relay.	Recharge or replace. Replace. Repair or replace. Replace.

BATTERY

Complaint	Symptom and possible causes	Remedy
"Sulfation" acidic white powdery substance or spots on surfaces of cell plates.	1. Not enough electrolyte. 2. Battery case is cracked. 3. Battery has been left in a run-down condition for a long time. 4. Contaminated electrolyte. (Foreign matter has enters the battery and become mixed with the electrolyte.)	Add distilled water, if the battery has not been damaged and "sulfation" has not advanced too far, and recharge. Replace the battery. Replace the battery or recharge. If "sulfation" has not advanced far, try to restore the battery by replacing the electrolyte, recharing it fully with the battery detached from the motorcycle and then adjusting electrolyte specific gravity.
Battery runs down quickly.	1. The charging method is not correct. 2. Cell plates have lost much of their active material as a result of overcharging. 3. A short-circuit condition exists within the battery due to excessive accumulation of sediments caused by the high electrolyte specific gravity. 4. Electrolyte specific gravity is too low. 5. Contaminated electrolyte. 6. Battery is too old.	Check the generator, regulator/rectifier and circuit connections, and make necessary adjustments to obtain specified charging operation. Replace the battery, and correct the charging system. Replace the battery. Recharge the battery fully and adjust electrolyte specific gravity. Replace the electrolyte, recharge the battery and then adjust specific gravity. Replace the battery.
Reversed battery polarity.	The battery has been connected the wrong way round in the system, so that it is being charged in the reverse direction.	Replace the battery and be sure to connect the battery properly.
Battery "sulfation"	1. Charging rate too low or too high. (When not in use, batteries should be recharged at least once a month to avoid sulfation.) 2. Battery electrolyte excessive or insufficient, or its specific gravity too high or too low. 3. The battery left unused for too long in cold climate.	Replace the battery. Keep the electrolyte up to the prescribed level, or adjust the specific gravity by consulting the battery maker's directions. Replace the battery, if badly sulfated.
Battery discharges too rapidly.	1. Dirty container top and sides. 2. Impurities in the electrolyte or electrolyte specific gravity is too high.	Clean. Change the electrolyte by consulting the battery maker's directions.

CHASSIS

Complaint	Symptom and possible causes	Remedy
Steering feels too heavy or stiff.	1. Steering stem nut overtightened. 2. Worn bearing or race in steering stem. 3. Distorted steering stem. 4. Not enough pressure in tires.	Adjust. Replace. Replace. Adjust.
Steering oscillation.	1. Loss of balance between right and left front suspensions. 2. Distorted front fork. 3. Distorted front axle or crooked tire.	Replace. Repair or replace. Replace.
Wobbling front wheel.	1. Distorted wheel rim. 2. Worn-down wheel bearings. 3. Defective or incorrect tire. 4. Loosen nut on axle.	Replace. Replace. Replace. Retighten.
Front suspension too soft.	1. Weakened springs. 2. Not enough fork oil.	Replace. Refill.
Front suspension too stiff.	1. Fork oil too viscous. 2. Too much fork oil.	Replace. Drain excess oil.
Noisy front suspension.	1. Not enough fork oil. 2. Loosen nuts on suspension.	Refill. Retighten.
Wobbling rear wheel.	1. Distorted wheel rim. 2. Worn-down rear wheel bearing. 3. Defective or incorrect tire. 4. Loose nut on axle. 5. Worn swing arm spacers. 6. Loosen nut on the rear shock.	Replace. Replace. Replace. Retighten. Replace. Retighten.
Rear suspension too soft.	1. Weakened springs. 2. Rear suspension adjuster impromerly set.	Replace. Adjust.
Rear suspension too stiff.	1. Rear suspension adjuster improperly set. 2. Worn swing arm spacers.	Adjust. Replace.
Noisy rear suspension.	1. Loosen nuts on suspension. 2. Worn swing arm spacers.	Retighten. Replace.

BRAKES

Complaint	Symptom and possible causes	Remedy
Poor braking (FRONT and REAR)	1. Not enough brake fluid in the reservoir. 2. Air trapped in brake fluid circuit. 3. Pads worn down. 4. Too much play on brake lever or pedal. 5. Shoes worn down.	Refill to level mark. Bleed air out. Replace. Adjust. Replace.
Insufficient brake power.	1. Leakage of brake fluid from hydraulic system. 2. Worn pads. 3. Oil adhesion of engaging surface of pads. 4. Worn disk. 5. Air in hydraulic system.	Repair or replace. Replace. Clean disk and pads. Replace. Bleed air.
Brake squeaking.	1. Carbon adhesion on pad surface. 2. Tilted pad. 3. Damaged wheel bearing. 4. Loosen front-wheel axle or rear-wheel axle. 5. Worn pads. 6. Foreign material in brake fluid. 7. Clogged return port of master cylinder.	Repair surface with sandpaper. Modify pad fitting. Replace. Tighten to specified torque. Replace. Replace brake fluid. Disassemble and clean master cylinder.
Excessive brake lever stroke.	1. Air in hydraulic system. 2. Worn brake lever cam. 3. Insufficient brake fluid. 4. Improper quality of brake fluid.	Bleed air. Replace brake lever. Replenish fluid to specified level ; bleed air. Replace with correct fluid.
Leakage of brake fluid.	1. Insufficient tightening of connection joints. 2. Cracked hose. 3. Worn piston and/or cup.	Tighten to specified torque. Replace. Replace piston and/or cup.

SPECIAL TOOLS

Special tools	Part Number · Part Name · Description
	09900-20101 Vernier Caliper Used to conveniently measure various dimensions.
	09900-20201 Micrometer(0~25mm) Used for precise measurement (00~25mm measure ranges).
	09900-20202 Micrometer(25~50mm) Used for precise measurement (25~50mm measure ranges).
	09900-20203 Micrometer(50~75mm) Used for precise measurement (50~75mm measure ranges).
	09900-20508 Cylinder gauge set Measure inside diameter of cylinder.
	09900-20605 Dial calipers Meassure width of conrod big-end.
	09900-20606 Dial gauge Meassure oscillation of wheel with using magnetic stand.
	09900-20701 Magnetic stand With using dial gauge.
	09900-20806 Thickness gauge Measure clearance of piston ring.

Special tools	Part Number · Part Name · Description
	09900-21109 Torque wrench Measure torque of tightening.
	09900-21304 V-block With using magnetic stand.
	09900-22301 Plastigauge Measure clearance of crankshaft thrust.
	09900-22401 Small bore gauge Measure inside diameter of conrod small-end.
	09900-25002 Pocket tester Measure voltage, electric current, resistance.
	09900-26006 Engine tachometer Measure rotational frequency of engine.
	09900-28107 Electro tester Inspect ignition coil.
	09900-28500 Battery charger Used to charge the dischared battery.
	09910-20115 Conrod holder Used to lock the crankshaft.

Special tools	Part Number · Part Name · Description
	09910-32812 Crankshaft installer
	Used to install the crankshaft in the crankcase.
	09910-34510 Piston pin puller
	Use to remove the piston pin.
	09913-10760 Fuel level gauge
	Measure height of carburetor.
	09913-50121 Oil seal remover
	Used to remove the oil seal.
	09913-70122 Bearing installer
	Used to drive bearing in.
	09913-75520 Bearing installer
	Used to drive bearing in.
	09913-75820 Bearing installer
	Used to drive bearing in.
	09913-75830 Bearing installer
	Used to install rear axle shaft oil seal.
	09913-76010 Bearing installer
	Used to drive crankshaft bearing in.

Special tools	Part Number · Part Name · Description
	09913-80112 Bearing installer
	Used to drive bearing in.
	09915-63310 Compression gauge adapter
	Used with compression gauge.
	09915-64510 Compression gauge
	Measure cylinder compression.
	09915-74510 Oil pressure gauge
	Measure oil pressure of 4-stroke engine.
	09916-14510 Valve spring compressor
	Used to remove and remounting valve stem.
	09916H35C00 Valve spring compressor attachment
	Used with valve spring compressor.
	09917-14910 Tappet adjuster driver
	Control to valve clearance.
	09920-13120 Crankcase separater
	Separate to crankcase.
	09920-53710 Clutch sleeve hub holder
	Used to install or remove clutch sleeve hub nut.

Special tools	Part Number · Part Name · Description
	09921-20200 Bearing remover(10mm)
	Used to remove oil seal or bearing.
	09921-20210 Bearing remover(12mm)
	Used to remove oil seal or bearing.
	09923-73210 Bearing remover(17mm)
	Used to remove bearing with the rotor remove sliding shaft.
	09923-74510 Bearing remover(20~35mm)
	Used to remove bearing with the rotor remove sliding shaft.
	09924-84521 Bearing installer
	Used to drive small bearing in.
	09930-10121 Spark plug socket wrench set
	Used to remove or remounting spark plug.
	09930-30102 Rotor remove sliding shaft
	Used to with bearing remover or rotor remover.
	09930-30162 Rotor remover
	Attached to the top of sliding shaft when removing rotor.
	09930-40113 Rotor holder
	Widely used to lock rotary parts such as a flywheel magneto.

Special tools	Part Number · Part Name · Description
	09930-44510 Rotor holder
	Widely used to lock rotary parts such as a flywheel magneto.
	09940-10122 Clamp wrench
	A hook wrench to adjust the steering head of motorcycle.
	09940-34520 T-handle
	Remove and remounting front fork oil cylinder.
	09940-34561 Front fork assembling tool attachment “D”
	Used with T-handle.
	09940-50113 Front fork oil seal installer
	Install front fork oil seal.
	09941-34513 Steering race installer
	Used to install steering outer race.
	09941-50111 Wheel bearing remover
	Used to remove wheel bearing.
	09943-74111 Front fork oil level gauge
	Used to drain the fork oil to the specified level.

TIGHTENING TORQUE

ENGINE

ITEM	N · m	kg · m
Magneto rotor nut	30～40	3.0～4.0
Magneto cover bolt	8～12	0.8～1.2
Muffer mounting bolt	9～12	0.9～1.2
Exhaust pipe nut	9～12	0.9～1.2
Exhaust pipe clamp bolt	9～12	0.9～1.2
Starter clutch bolt	15～20	1.5～2.0
Cylinder nut (16 mm)	7～11	0.7～1.1
Cylinder head nut (8mm)	15～20	1.5～2.0
Cylinder head cover bolt	9～10	0.9～1.0
Oil filter cap bolt	8～12	0.8～1.2
Engine sprocket nut	80～100	8.0～10.0
Engine oil drain plug	18～20	1.8～2.0
Engine mounting bolt (M10)	46～60	4.6～6.0
Engine mounting bolt (M8)	28～34	2.8～3.4
Spark plug	20～25	2.0～2.5
Cam chain sprocket bolt	10～13	1.0～1.3
Cam chain tensioner bolt	6～8	0.6～0.8
Cam chain tensioner adjuster bolt	8～12	0.8～1.2
Camshaft sprocket bolt	10～13	1.0～1.3
Camshaft holder nut	15～20	1.5～2.0
Crankcase bolt	8～12	0.8～1.2
Clutch cover bolt	8～12	0.8～1.2
Clutch sleeve hub nut	30～50	3.0～5.0
Primary drive gear nut / Oil pump drive gear nut	40～60	4.0～6.0
Neutral cam stopper plug	20～25	2.0～2.5

CHASSIS

ITEM	N · m	kg · m
Rear brake cam lever bolt	8～12	0.8～1.2
Rear shock absorber fitting nut (Upper)	40～60	4.0～6.0
Rear shock absorber fitting nut (Lower)	40～60	4.0～6.0
Rear sprocket nut	20～30	2.0～3.0
Rear axle nut	90～140	9.0～14.0
Rear torque link nut (Front)	10～15	1.0～1.5
Rear torque link nut (Rear)	10～15	1.0～1.5
Swing arm pivot nut	50～80	5.0～8.0
Steering stem nut	80～100	8.0～10.0
Steering stem head nut	80～100	8.0～10.0
Front brake disc bolt	18～28	1.8～2.8
Front brake master cylinder mounting bolt	8～12	0.8～1.2
Front brake caliper air bleeder valve	6～9	0.6～0.9
Front brake caliper mounting bolt	18～28	1.8～2.8
Front brake hose union bolt	20～25	2.0～2.5
Front axle	50～80	5.0～8.0
Front axle pinch bolt	15～25	1.5～2.5
Front fork damper rod bolt	30～40	3.0～4.0
Front fork upper clamp bolt	22～35	2.2～3.5
Front fork upper bolt	22～30	2.2～3.0
Front fork lower clamp bolt	22～35	2.2～3.5
Front footrest bolt	40～60	4.0～6.0
Handlebar clamp bolt	18～28	1.8～2.8

TIGHTENING TORQUE CHART

For other bolts and nuts who's torque is not listed, refer to this chart :

Bolt Diameter (mm)	Conventional or "4" marked bolt		"7" marked bolt	
	N · m	kg · m	N · m	kg · m
4	1～2	0.1～0.2	1.5～3	0.15～0.3
5	2～4	0.2～0.4	3～6	0.3～0.6
6	4～7	0.4～0.7	8～12	0.8～1.2
8	10～16	1.0～1.6	18～28	1.8～2.8
10	22～35	2.2～3.5	40～60	4.0～6.0
12	35～55	3.5～5.5	70～100	7.0～10.0
14	50～80	5.0～8.0	110～160	11.0～16.0
16	80～130	8.0～13.0	170～250	17.0～25.0
18	130～190	13.0～19.0	200～280	20.0～28.0

SERVICE DATA

VALVE + GUIDE

Unit : mm (in)

ITEM	STANDARD		LIMIT
Valve diam.	IN.	ϕ 22 (0.866)	–
	EX.	ϕ 19 (0.748)	–
Valve lift	IN.	7.4 (0291)	–
	EX.	7.1 (0.280)	–
Valve clearance (when cold)	IN. & EX.	0.08～0.13 (0.0032～0.0051)	–
Valve guide to valve stem clearance	IN.	0.010～0.037 (0.0004～0.0015)	–
	EX.	0.030～0.057 (0.0012～0.0022)	–
Valve guide I.D.	IN. & EX.	5.000～5.012 (0.1969～0.1973)	–
Valve stem O.D.	IN.	4.975～4.990 (0.1959～0.1965)	–
	EX.	4.955～4.970 (0.1951～0.1957)	–
Valve stem runout	IN. & EX.	–	0.05 (0.002)
Valve head thickness	IN. & EX.	–	0.5 (0.02)
Valve stem end length	IN. & EX.	3.5 (0.1378)	3.38 (0.1330)
Valve stem width	IN. & EX.	0.9～1.1 (0.0354～0.0433)	–
Valve head radial runout	IN. & EX.	–	0.03 (0.0012)
Valve spring free length	IN. & EX.	41.65 (1.64)	–
Valve spring tension(Assembling condition)	IN. & EX.	13.6～16.6 kg at length 36.6 mm (29.98～36.60 lbs at length 1.44 in)	–

CAMSHAFT + CYLINDER HEAD

Unit : mm (in)

ITEM	STANDARD		LIMIT
Cam height	IN.	34.44～34.48 (1.3559～1.3575)	34.18 (1.3457)
	EX.	33.81～33.85 (1.3311～1.3327)	33.55 (1.3209)
Cam chain 20-pitch length		–	129.9 (5.11)
Camshaft runout		–	0.10 (0.004)
Camshaft holder distortion		–	0.05 (0.002)
Rocker arm I.D.	IN. & EX.	12.000～12.018 (0.4724～0.4732)	–
Rocker arm shaft O.D.	IN. & EX.	11.977～11.995 (0.4715～0.4722)	–
Cylinder head distortion		–	0.05 (0.002)
Cylinder head cover distortion		–	0.05 (0.002)

CYLINDER + PISTON + PISTON RING

Unit : mm (in)

ITEM	STANDARD		LIMIT
Compression pressure	15.6 kg/㎠ (at 500 rpm)		8.0 kg/㎠
Piston to cylinder clearance	0.050～0.060 (0.0020～0.0024)		0.120 (0.0047)
Cylinder bore	57.000～57.015 (2.2441～2.2447)		57.080 (2.2473)
Piston diam.	56.945～56.960 (2.2419～2.2425) Measure at 15 mm (0.6 in) from the skirt end		56.880 (2.2394)
Cylinder distortion	–		0.05 (0.002)
Piston ring free end gap	1st	7.2 (0.28)	5.7 (0.22)
	2nd	5.8 (0.23)	4.6 (0.18)
Piston ring end gap (Assembling condition)	1st	0.20～0.32 (0.0079～0.0126)	0.50 (0.0197)
	2nd	0.20～0.32 (0.0079～0.0126)	0.50 (0.0197)
Piston ring to groove clearance	1st	–	0.180 (0.0071)
	2nd	–	0.150 (0.0059)
Piston ring groove width	1st	1.01～1.03 (0.0398～0.0406)	–
	2nd	1.01～1.03 (0.0398～0.0406)	–
	Oil	2.01～2.03 (0.0791～0.0799)	–
Piston ring thickness	1st	0.970～0.990 (0.0382～0.0390)	–
	2nd	0.970～0.990 (0.0382～0.0390)	–
Piston pin bore I.D	15.002～15.008 (0.5906～0.5909)		15.030 (0.5917)
Piston pin O.D	14.994～15.000 (0.5903～0.5905)		14.980 (0.5897)

CONROD + CRANKSHAFT

Unit : mm (in)

ITEM	STANDARD	LIMIT
Conrod small end I.D.	15.006～15.014 (0.5908～0.5911)	15.040 (0.5921)
Conrod deflection	–	3.0 (0.12)
Conrod big end side clearance	0.10～0.45 (0.004～0.018)	1.00 (0.04)
Conrod big end width	15.95～16.00 (0.6280～0.6299)	–
Crank web to wed width	53.0±0.1 (2.087±0.004)	–
Crankshaft runout	–	0.05 (0.002)

OIL PUMP

Unit : mm (in)

ITEM	STANDARD	LIMIT
Oil pump reduction ratio	2.000(30/15)	–
Oil pressure (at 60℃, 140 °F)	0.3～0.5 kg/㎠ (at 3,000 rpm)	–

CLUTCH

Unit : mm (in)

ITEM	STANDARD	LIMIT
Clutch cable play	4 (0.16)	–
Clutch release screw	1/4～1/2 turn back	–
Drive plate thickness	2.9～3.1 (0.1142～0.1220)	2.6 (0.1024)
Drive plate claw width	11.8～12.0 (0.4646～0.4724)	11.0 (0.4331)
Driven plate distortion	–	0.10 (0.004)
Clutch spring free length	–	29.5 (1.16)

TRANSMISSION+DRIVE CHAIN

Unit : mm except ratio

ITEM	STANDARD		LIMIT
Final reduction ratio	3.692		–
Gear ratios	Low	2.750	–
	2nd	1.786	–
	3rd	1.368	–
	4th	1.045	–
	Top	0.913	–
Shift fork to groove clearance	0.10～0.30 (0.004～0.012)		0.50 (0.020)
Shift fork groove width	No. & No.3	5.0～5.1 (0.197～0.201)	–
	No.3	5.0～5.1 (0.197～0.201)	–
Shift fork thickness	No.1 & No.3	4.8～4.9 (0.189～0.193)	–
	No.3	4.8～4.9 (0.189～0.193)	–
Countershaft length(Low to 2nd)	$88.0 \pm^{0.1}_{0.2}$	$\left(3.465 \pm^{0.004}_{0.008}\right)$	–
Drive chain	Type	428SO	–
	Links	130 Links	–
	20 pitch length	254 (10.0)	256.5 (10.1)
Drive chain slack	20～30 (0.79～1.18)		–

CARBURETOR

Unit : mm (in)

ITEM		SPECIFICATION
Carburetor type		PD 18F
Bore size		ϕ 24
I.D. No.		RT 125
Idle rpm		1,450±50 rpm
Float height		12.5 (0.492)
Main jet	(M.J.)	# 102
Main air jet	(M.A.J.)	# 100
Jet needle	(J.N.)	AIFC-2
Needle jet	(N.J.)	ϕ 2.6
Pilot jet	(P.J.)	# 38
Throttle valve	(TH.V.)	# 3
By-pass	(B.P.)	ϕ 0.9
Valve seat	(V.S.)	ϕ 2.0
Starter jet		MAX # 500
Pilot screw	(P.S.)	1¾
Pilot air jet	(P.A.J.)	# 120
Throttle cable play		0.5～1.0 (0.02～0.04)

FUEL + OIL

ITEM	SPECIFICATION		NOTE
Fuel type	Gasoline should be used graded 85～95 octane or higher. An unleaded or low-lead type is recommended.		
Fuel tank (including reserve)	9.0 liter		
Reserve	1.0 liter		
Engine oil type	SAE 10W/30 or 10W/40		Over SG (API)
Engine oil capacity	change	950 mℓ	
	Filter change	1,050 mℓ	
	Overhaul	1,400 mℓ	
Brake fluid type	DOT 3 or DOT 4		

ELECTRICAL

Unit : mm (in)

ITEM	SPECIFICATION	
Ignition timing (BTDC/rpm)	15°/2,250 and 31°/4,000	
Spark plug	Type	C8EH-9
	Gap	0.8～0.9 (0.032～0.035)
Spark performance	Over 8 mm (0.32)	
Ignition coil resistance	Primary	0.19～0.24 Ω
	Secondary	5.4～6.6 kΩ
Magneto coil resistance	Pick-up	G-L Approx. 90～110 Ω
	Charging	Y-Y Approx. 0.6～0.9 Ω
Magneto no-load voltage	67～99 V/5,000 rpm	
Regulated voltage	14.0～15.0 V/5,000 rpm	
Battery	Capacity	12V 6Ah
	Type	STX 7A-BS
Fuse size	15A	

WATTAGE

⚠ CAUTION **Do not use except the specified bulb(Wattage)**

Unit : W

ITEM		SPECIFICATION
Head lamp	HI	35
	LO	35
License plate lamp		5
Brake/Tail lamp		21/5
Turn signal lamp		10
Speedometer lamp		3
Neutral indicator lamp		1.7
Turn signal indicator lamp		1.7
High beam indicator lamp		1.7

TIRE PRESSURE

COLD INFLATION TIRE PRESSURE	NORMAL RIDING					
	SOLO RIDING			DUAL RIDING		
	kPa	kg/㎠	psi	kPa	kg/㎠	psi
FRONT	123	1.25	18	147	1.50	22
REAR	123	1.25	18	172	1.75	25

BRAKE+WHEEL

Unit : mm (in)

ITEM	STANDARD		LIMIT
Front brake lever distance	20～30 (0.79～1.18)		–
Brake disc thickness	Front	4.0 (0.16)	3.0 (0.12)
Brake disc runout	Front	–	0.30 (0.012)
Master cylinder bore	Front	12.700～12.743 (0.5000～0.5017)	–
Master cylinder piston diam.	Front	12.657～12.684 (0.4983～0.4994)	–
Brake caliper cylinder bore	Front	25.4 (1.0)	–
Brake caliper piston diam.	Front	25.4 (1.0)	–
Brake drum I.D	Rear	130.0 (5.12)	130.7 (5.15)
Brake shoe thickness	Rear	4.0 (0.16)	1.5 (0.06)
Wheel runout	Axis	–	2.0 (0.08)
	Radial	–	2.0 (0.08)
Wheel axle runout	Front	–	0.25 (0.01)
	Rear	–	0.25 (0.01)
Tire size	Front	130/80-18 66P	–
	Rear	180/80-14M/C 78P	–
Tire tread depth	Front	5.8 (0.23)	1.6 (0.06)
	Rear	8.3 (0.33)	1.6 (0.06)

SUSPENSION

Unit: mm (in)

ITEM	STANDARD	LIMIT
Front fork stroke	160 (6.3)	–
Front fork spring free length	553.7 (21.8)	–
Front fork oil type	TELLUS #22	–
Front fork oil level	240 (9.5)	–
Front fork oil capacity (each leg)	215cc±2.5	–
Rear wheel travel	105 (4.1)	–
Swingarm pivot shaft runout	–	0.6 (0.024)
Rear shock absorber spring length	141.1 (5.5)	–

WIRE AND CABLE ROUTING

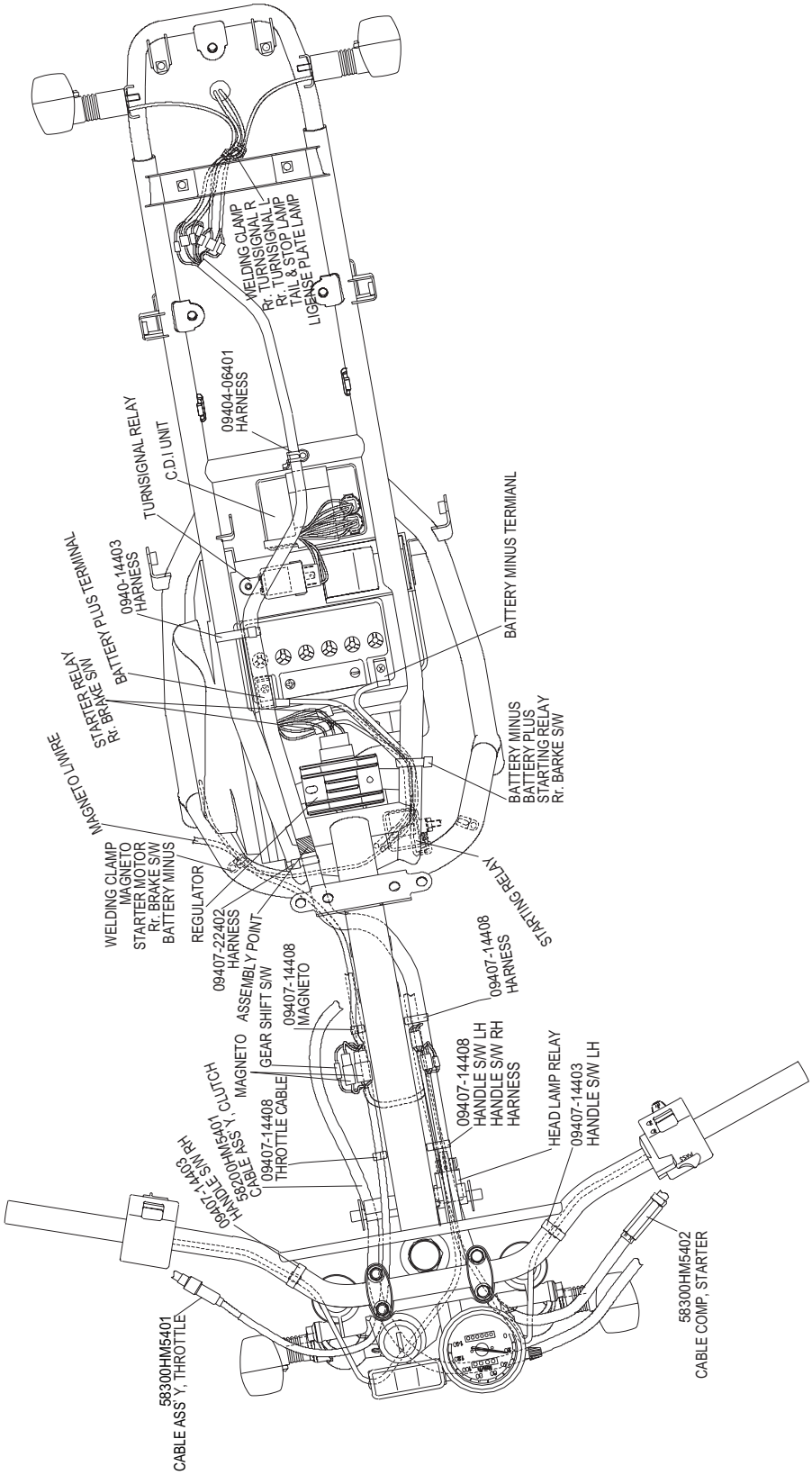

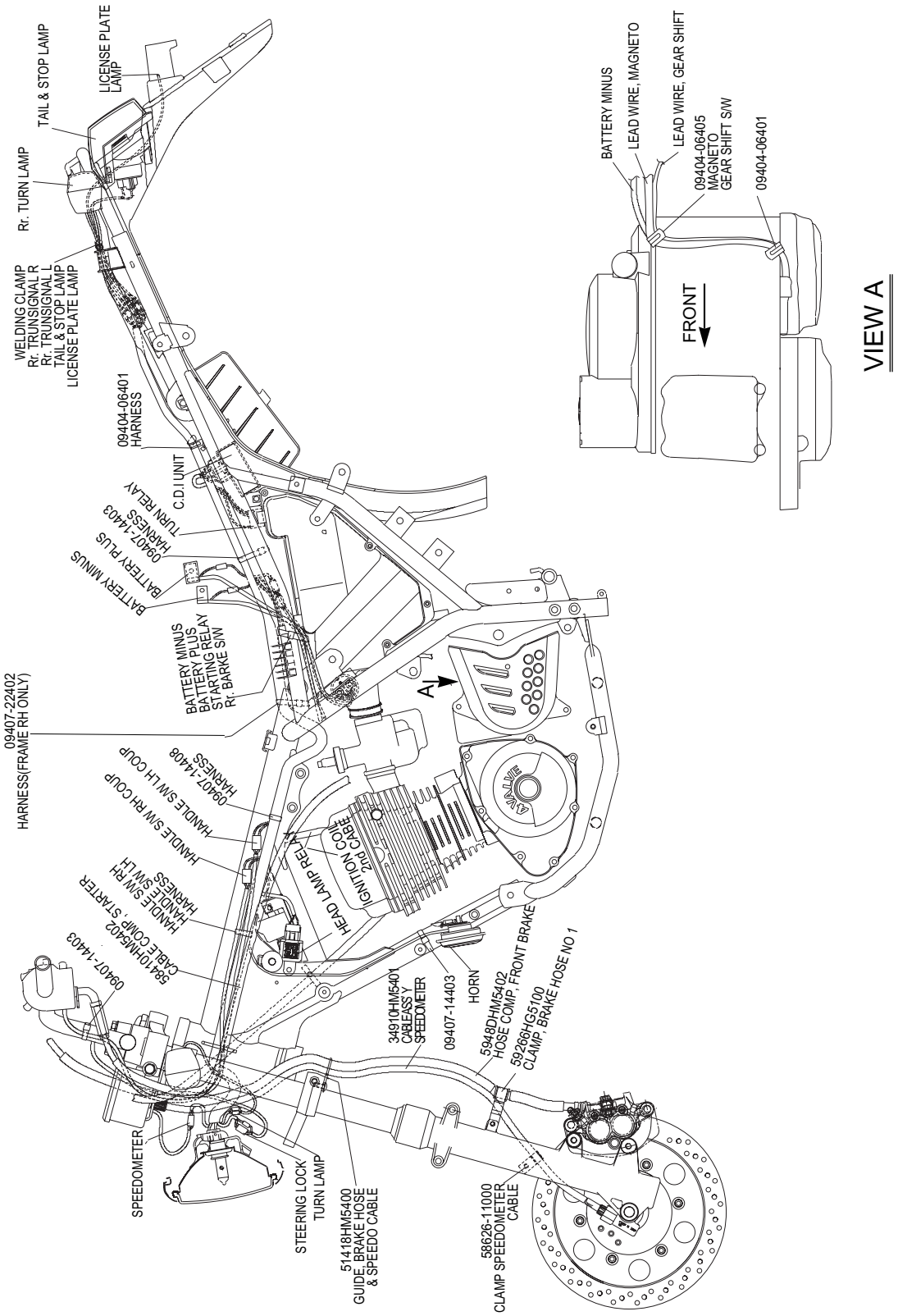
TAIL & STOP LAMP
LICENSE PLATE LAMP
Rr. TURN LAMP
WELDING CLAMP
Rr. TRUNSIGNAL R
Rr. TRUNSIGNAL L
TAIL & STOP LAMP
LICENSE PLATE LAMP
09404-06401
HARNESS
C.D.I UNIT
TURN RELAY
09407-14403
HARNESS
BATTERY PLUS
BATTERY MINUS
BATTERY MINUS
BATTERY PLUS
STARTING RELAY
Rr. BARKE S/W
09407-22402
HARNESS(FRAME RH ONLY)
09407-14408
HARNESS
HANDLE S/W LH COUP
HANDLE S/W RH COUP
HANDLE S/W RH
HANDLE S/W LH
HARNESS
58410HM5402
CABLE COMP, STARTER
09407-14403
HEAD LAMP RELAY
IGNITION COIL
2nd CABLE
A
4 VALVE
34910HM5401
CABLEASS'Y
SPEEDOMETER
09407-14403
HORN
5948DHM5402
HOSE COMP, FRONT BRAKE
59266HG5100
CLAMP, BRAKE HOSE NO 1
SPEEDOMETER
STEERING LOCK
TURN LAMP
51418HM5400
GUIDE, BRAKE HOSE
& SPEEDO CABLE
58626-11000
CLAMP SPEEDOMETER
CABLE
BATTERY MINUS
LEAD WIRE, MAGNETO
LEAD WIRE, GEAR SHIFT
09404-06405
MAGNETO
GEAR SHIFT S/W
09404-06401
FRONT
VIEW A

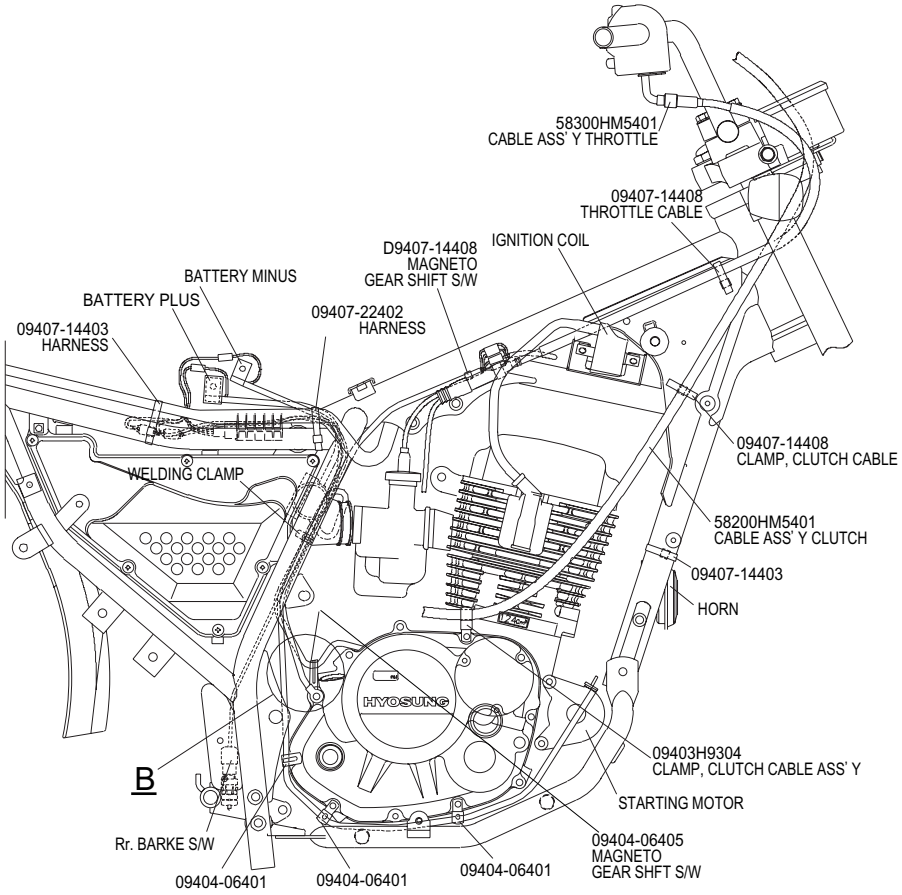
58300HM5401
CABLE ASS' Y THROTTLE
09407-14408
THROTTLE CABLE
IGNITION COIL
D9407-14408
MAGNETO
GEAR SHIFT S/W
BATTERY MINUS
BATTERY PLUS
09407-22402
HARNESS
09407-14403
HARNESS
09407-14408
CLAMP, CLUTCH CABLE
WELDING CLAMP
58200HM5401
CABLE ASS' Y CLUTCH
09407-14403
HORN
HYOSUNG
09403H9304
CLAMP, CLUTCH CABLE ASS' Y
B
STARTING MOTOR
Rr. BARKE S/W
09404-06405
MAGNETO
GEAR SHFT S/W
09404-06401
09404-06401
09404-06401

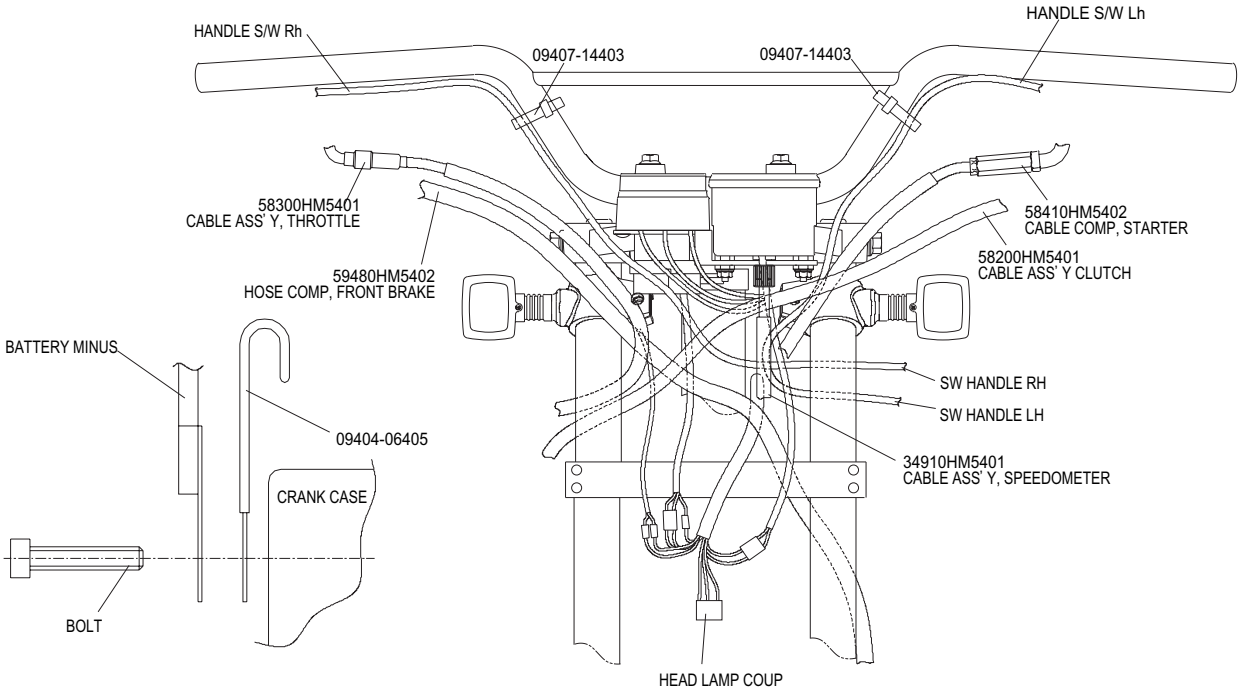
HANDLE S/W Rh
09407-14403
09407-14403
HANDLE S/W Lh
58300HM5401
CABLE ASS' Y, THROTTLE
58410HM5402
CABLE COMP, STARTER
58200HM5401
CABLE ASS' Y CLUTCH
59480HM5402
HOSE COMP, FRONT BRAKE
BATTERY MINUS
SW HANDLE RH
SW HANDLE LH
09404-06405
34910HM5401
CABLE ASS' Y, SPEEDOMETER
CRANK CASE
BOLT
HEAD LAMP COUP

DETAIL B

WIRING DIAGRAM

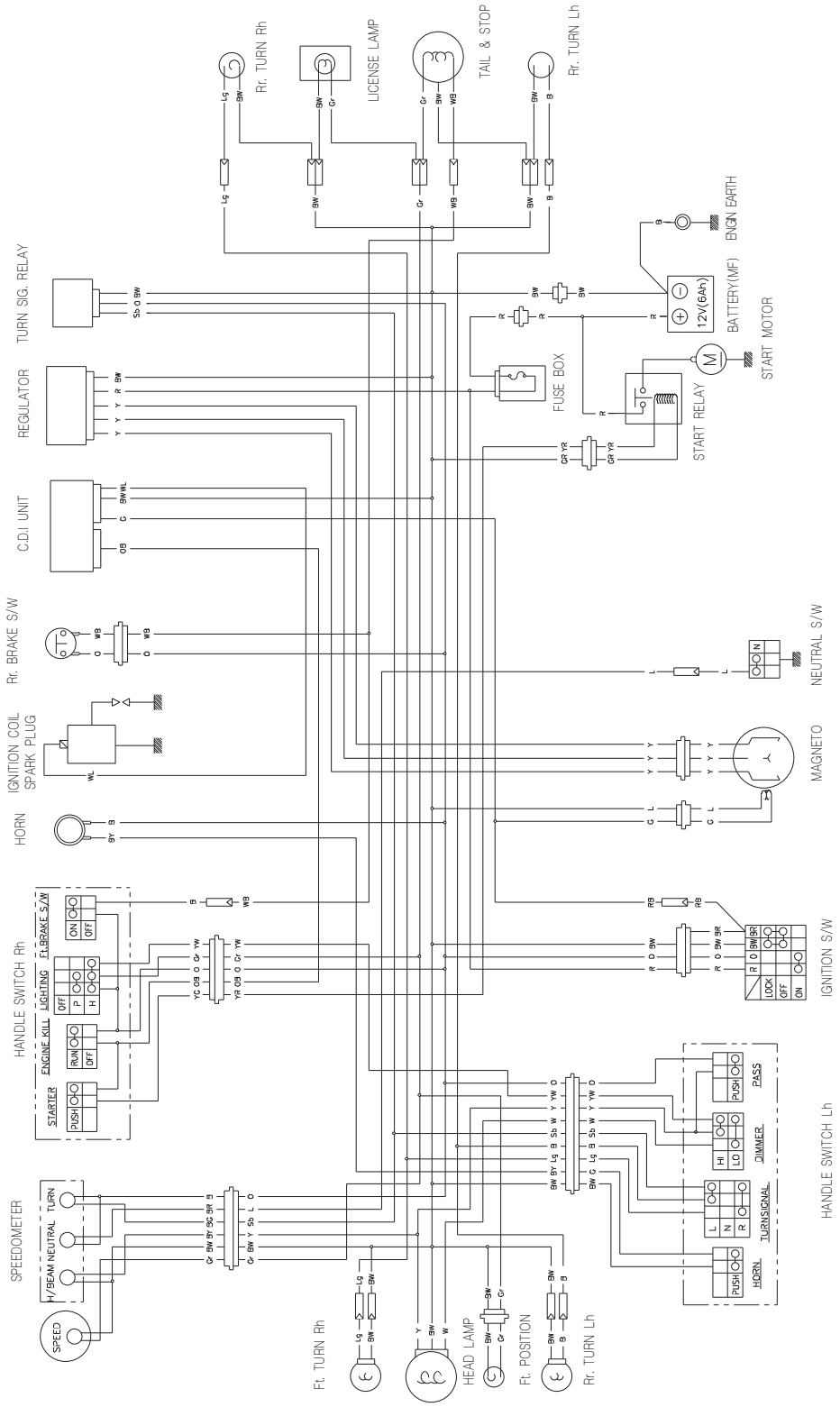

WIRE COLOR

B	: Black	Lg	: Light green	Y	: Yellow	RB	: Red with Black tracer
Br	: Brown	O	: Orange	BG	: Black with Green tracer	RW	: Red with White tracer
G	: Green	R	: Red	BW	: Black with White tracer	WB	: White with Black tracer
Gr	: Gray	Sb	: Light blue	BR	: Black with Red tracer	WR	: White with Red tracer
L	: Blue	W	: White	LW	: Blue with White tracer	YB	: Yellow with Black tracer

Prepared by

HYOSUNG MOTORS & MACHINERY INC.

1st Ed. NOV. 2002.

Manual No. 99000-94610
Printed in Korea