HUSABERG FE 450 2011

SPARE PARTS MANUAL: ENGINE

ART.NO.: 3CM090030KEN

ENGLISH

HUSABERG

INDEX

DIAGNOSTIC TOOL

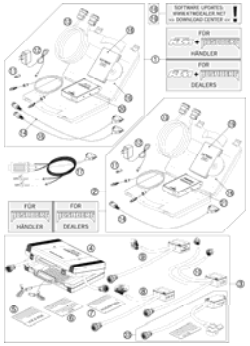

3

ENGINE CASE

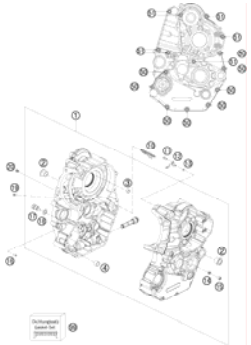

4

BALANCER SHAFT

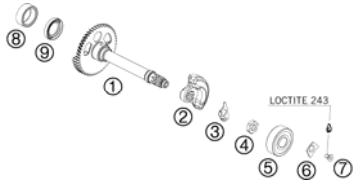

5

CYLINDER

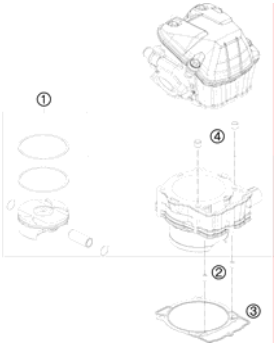

6

CRANKSHAFT, PISTON

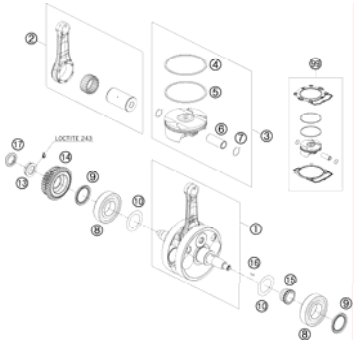

7

CLUTCH COVER

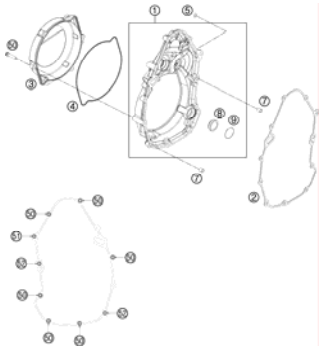

8

SECONDARY AIR SYSTEM SAS

9

CLUTCH

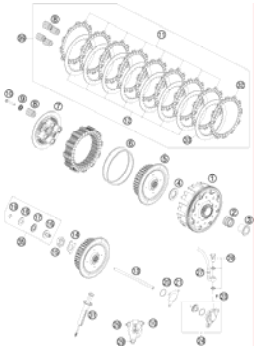

10

TRANSMISSION I - MAIN SHAFT

11

TRANSMISSION II - COUNTERSHAFT

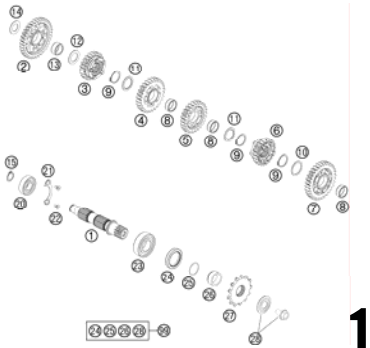

12

SHIFTING MECHANISM

13

WATER PUMP

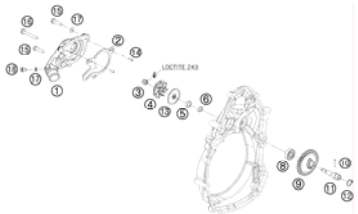

14

INDEX

COOLING SYSTEM

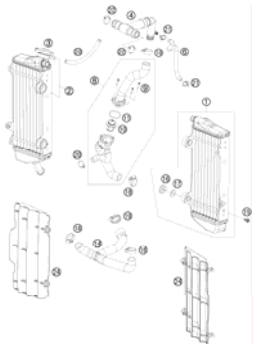

15

TIMING DRIVE

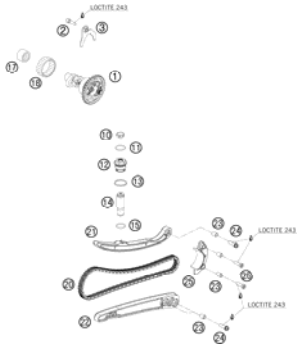

16

VALVE DRIVE

17

CYLINDER HEAD

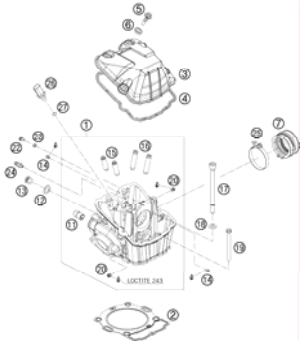

19

LUBRICATING SYSTEM

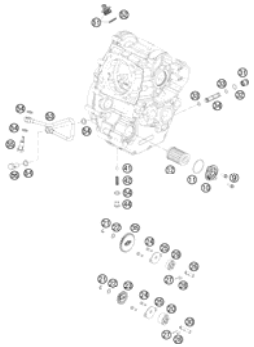

20

INGNITION SYSTEM

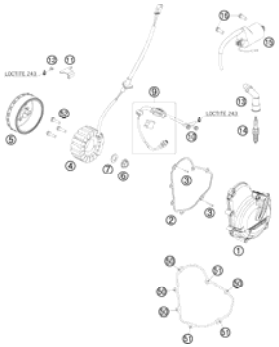

21

ELECTRIC STARTER

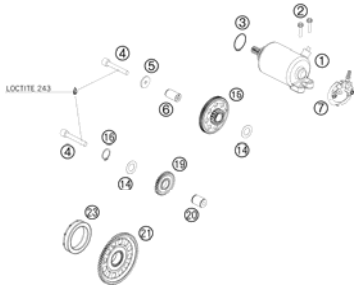

22

THROTTLE BODY

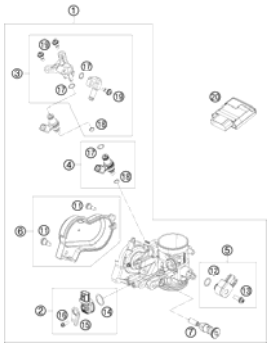

23

All information contained is without obligation. KTM-Sportmotorcycle AG particularly reserves the right to modify any equipment, technical specifications, prices, colors, shapes, materials, services, service work, constructions, equipment and the like so as to adapt them to local conditions or to cancel any of the above items, all without previous announcement and without giving reasons. KTM may stop manufacturing certain models without previous notice. KTM shall not be held liable for any deviations of availability and/or ability to deliver, illustrations, descriptions, printing and/or other errors. The illustrated models partly contain extra equipment, which is not applied to standard models.
© by KTM-SPORTMOTORCYCLE AG, Mattighofen AUSTRIA; All rights reserved; Reprint, also in extracts, with written allowance of KTM-SPORTMOTORCYCLE AG, Mattighofen only.

DIAGNOSTIC TOOL

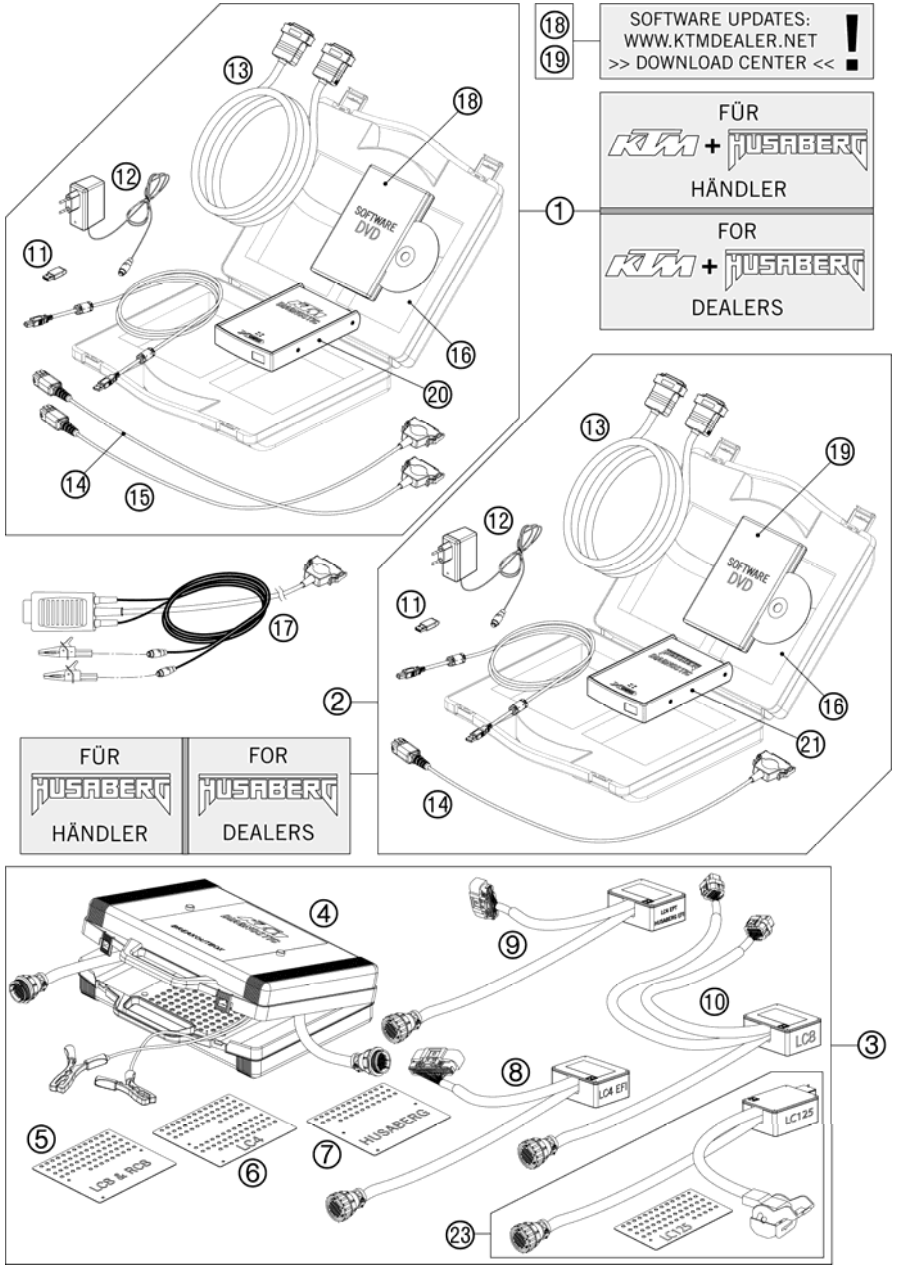

FIG	PART NUMBER	DESCRIPTION	QTY
1	00029096200	DIAGNOSTIC TOOL HUSABERG/KTM	1
2	00029096000	DIAGNOSTIC TOOL HUSABERG	1
3	00029095000	BREAKOUT-BOX KPL.	1
4	00029095001	BREAKOUT-BOX	1
5	00029095005	TEMPLATE LC8 / RC8	1
6	00029095006	TEMPLATE LC4	1
7	00029095007	TEMPLATE HUSABERG	1
8	00029095003	ADAPTER LC4 EFI	1
9	00029095004	ADAPTER LC4 EPT/HUSABERG EFI	1
10	00029095002	ADAPTER LC8	1
11	00029096006	DIAGNOSTIC HASP DONGLE XC1	2
12	00029096003	POWERSUPPLY 220V/12V FOR AVL	2
13	00029096002	EXTENSION CABLE	2
14	00029096001	DIAGNOSTIC CABLE HUSABERG	2
15	00029096009	DIAGNOSTIC CABLE KTM	1
16	00029096004	CASE FOR DIAGNOSTIC-TOOL	1
17	00029096010	DIAGN. CABLE EXT. POWER SUPPLY	1
18	00029096007	DVD KTM XC-1 UPDATE V2.0	1
19	00029096008	BASIC SOFTWARE DVD HUSABERG	1
20	00029096011	FRAME XC_1 SCANBOX KTM	1
21	00029096012	FRAME XC_1 SCANBOX HUSABERG	1
23	00029095009	ADAPTER LC125	1

100002920 / C100002920

* NEW PART

X AS REQUIRED

ENGINE CASE

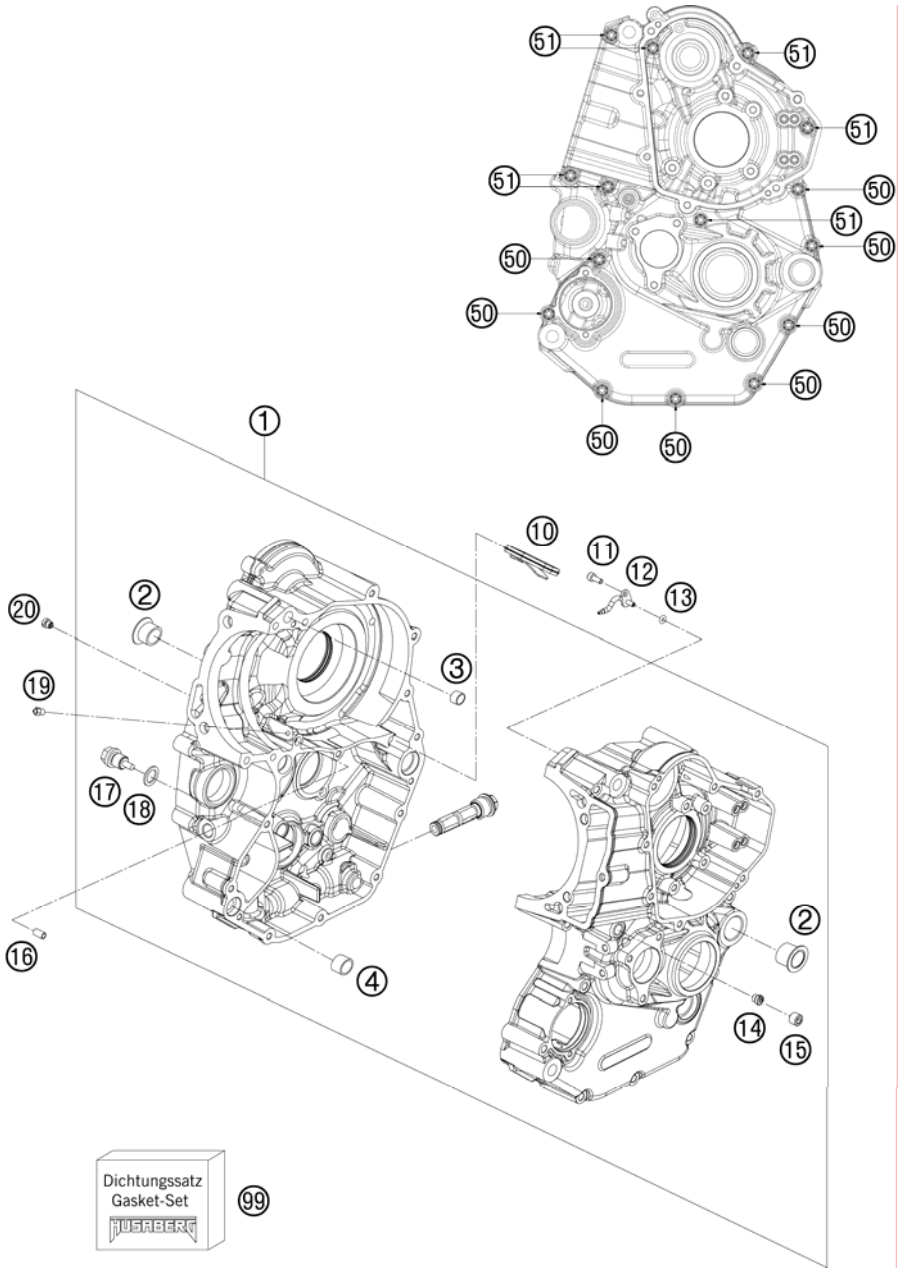

FIG	PART NUMBER	DESCRIPTION	QTY
1	81230000133	ENGINE CASE CPL.W. BEARINGS 09	1
2	75030010000	CASE BUSH	2
3	51030026100	DOWEL 17 X 13 X 12	1
4	54830027000	DOWEL 21X12 03	1
10	81205027000	VALVE	1
11	0912040103	AH.SCREW DIN0912-M 4X10	1
12	81230064000	OIL JET ANGLED 70	1
13	0770035020	O-RING 3,5X2,00 NBR	1
14	59030054000	JET 60 DELLORTO M6X0,75	1
15	0906100100	PLUG DIN0906-M10X1	1
16	59030023000	DOWEL 6X8X11,5	1
17	58030021000	OILDRAIN PLUG W.MAG. M 12X1,5	1
18	58038022000	CU-SEAL RING DIN7603-12X18X1,5	1
19	60030063070	OIL JET 70 M5	1
20	57031523145	MAIN JET 145	1
50	0025060656	HH COLLAR SCREW M6X65 TX30	8
51	0025060756	HH COLLAR SCREW M6X75 TX30	7
99	81230099000	GASKET KIT HUSABERG	1

098123010 / C098123010

* NEW PART

X AS REQUIRED

BALANCER SHAFT

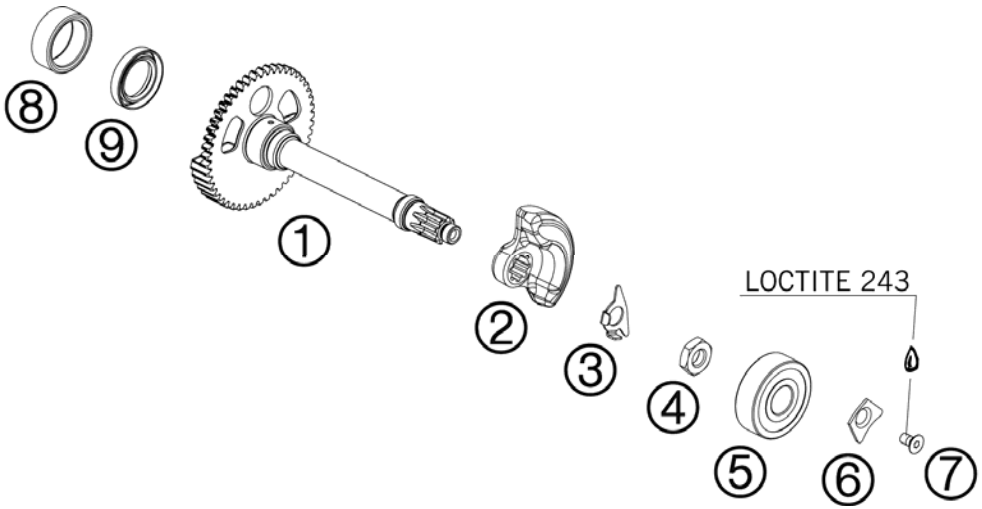

FIG	PART NUMBER	DESCRIPTION	QTY
1	81230056100	BALANCER SHAFT	1
2	78030057000	BALANCE WEIGHT	1
3	78030068000	TAB WASHER 08	1
4	04391010031	HEXAGON NUT DIN0439-M10X1 A2	1
5	0625063020	BALL BEARING	1
6	78033232000	TAB WASHER	1
7	0019050103	%INT TORX FLAT HEAD M 5X10 8.8	1
8	0617253212	NEEDLE BEARING 25X32X12 HK2512	1
9	0760203261	SHAFT SEAL RING 20X32X6 RUBBER	1

098123030 / C098123030

* NEW PART

X AS REQUIRED

CYLINDER

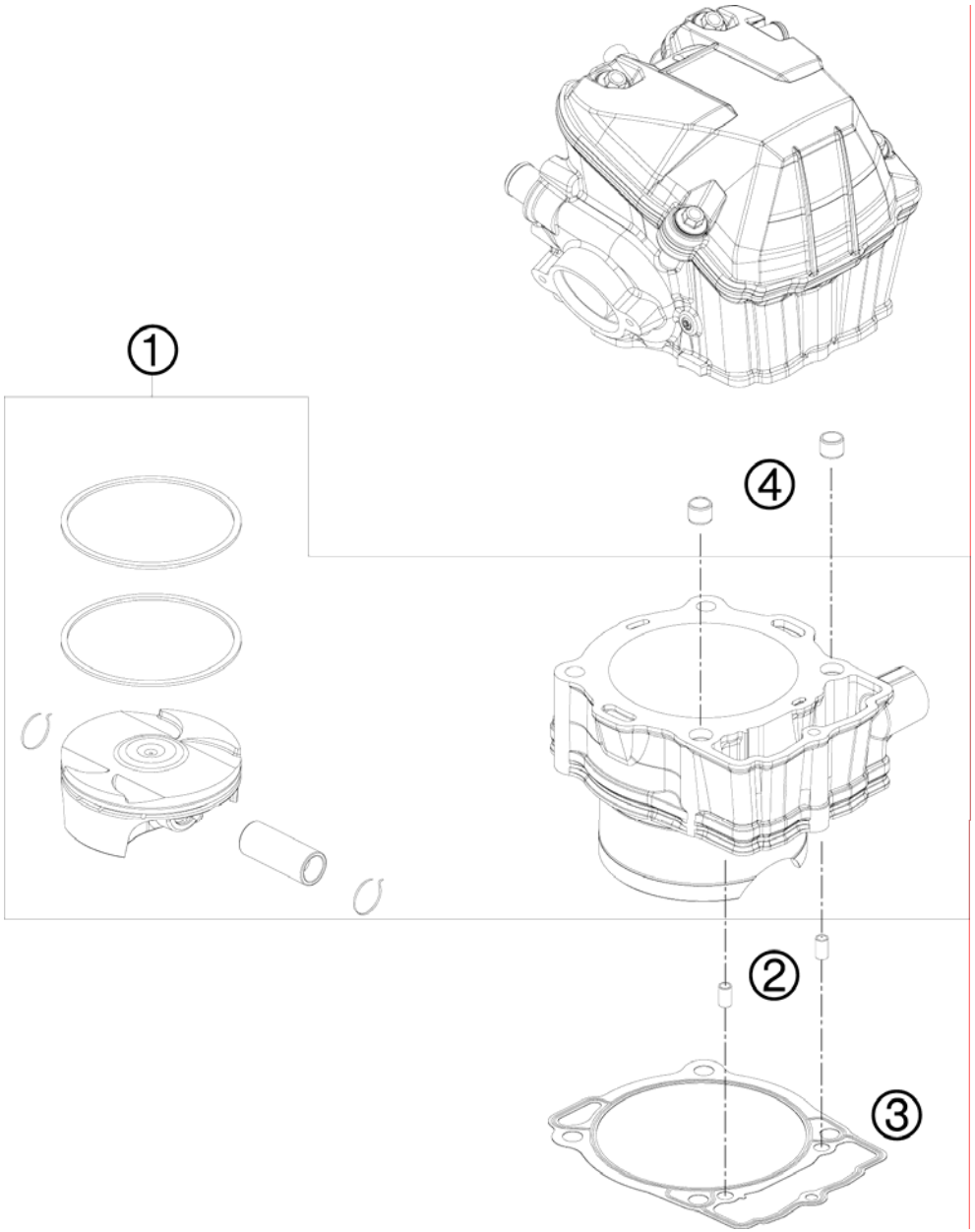

FIG	PART NUMBER	DESCRIPTION	QTY
1	78030038300	CYLINDER AND PISTON CPL.	1
2	59030023000	DOWEL 6X8X11,5	2
3	78030035000	CYLINDER BASE GASKET	1
4	58530014000	DOWEL 10,2X12,5X10 2001	2

108173040 / C108123041

* NEW PART

X AS REQUIRED

CRANKSHAFT, PISTON

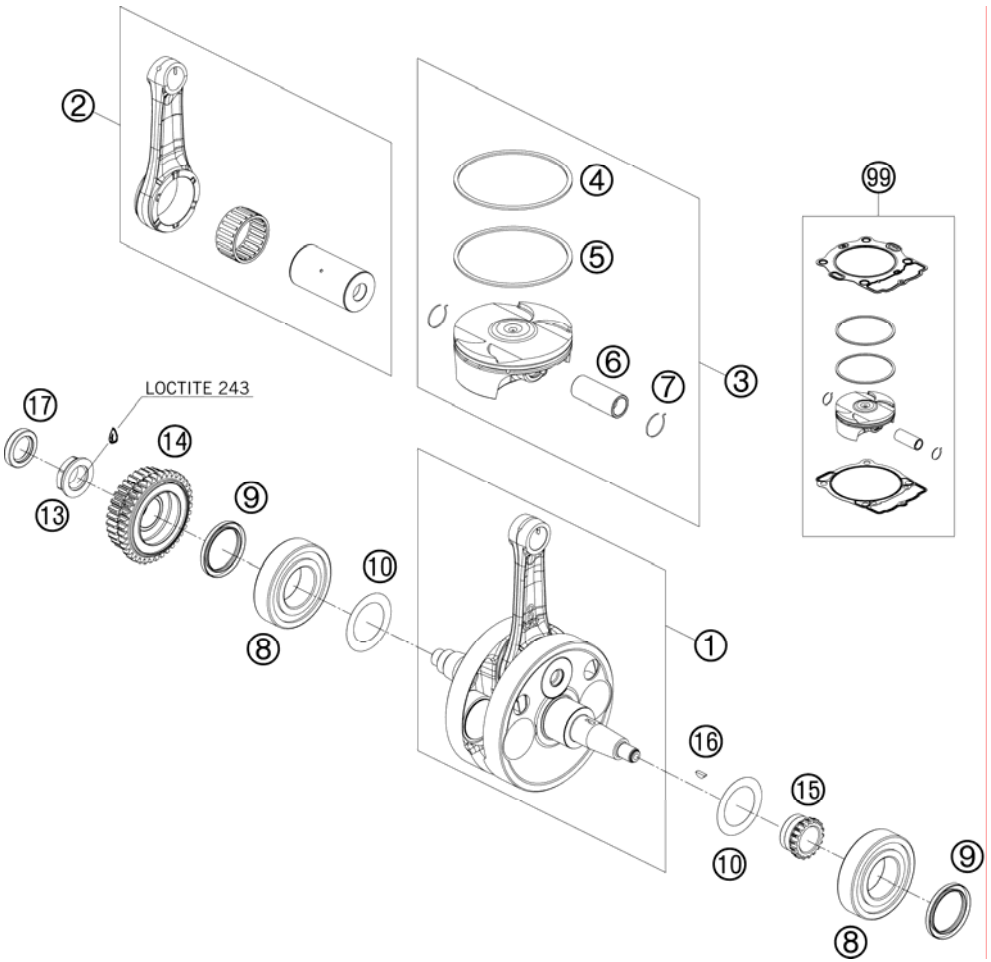

FIG	PART NUMBER	DESCRIPTION	QTY
1	81230018200	CRANKSHAFT CPL.	1
2	78030015144	CONN. ROD REPAIR KIT 450 2010	1
3	78030007300 I	PISTON CPL.	1
3	78030007300 II	PISTON CPL.	1
4	78030030100	COMPRESSION RING	1
5	78030032200	OIL SCRAPER PISTON RING	1
6	78030033000	PISTON PIN 08	1
7	77330074000	CIRCLIP	2
8	0412357217	CYL.ROLLER BEAR. NJ 207ECP C4	2
9	0760354774	SHAFT SEAL RING 35X47X7 VITON	2
10	56530081000	SHIM WASHER 36X48X0,10	x
10	56530081100	SHIM WASHER 36X48X0,15	x
10	56530081200	SHIM WASHER 36X48X0,20 STEEL	x
10	56530081300	SHIM WASHER 36X48X0,30	x
13	78030029200	NUT PRIMARY WHEEL M20X1,5	1
14	78032000333	PRIMARY WHEEL	1
15	78036014200	TIMING GEAR 18T.	1
16	0888030037	WOODRUFF KEY DIN6888-3X3,7	1
17	0760203261	SHAFT SEAL RING 20X32X6 RUBBER	1
99	00050000030	PISTON KIT GR.I 450 EXC 08-11	x
99	00050000214	PISTON KIT GR. II 450EXC 08-11	x

098173060 / C108123062

* NEW PART

X AS REQUIRED

CLUTCH COVER

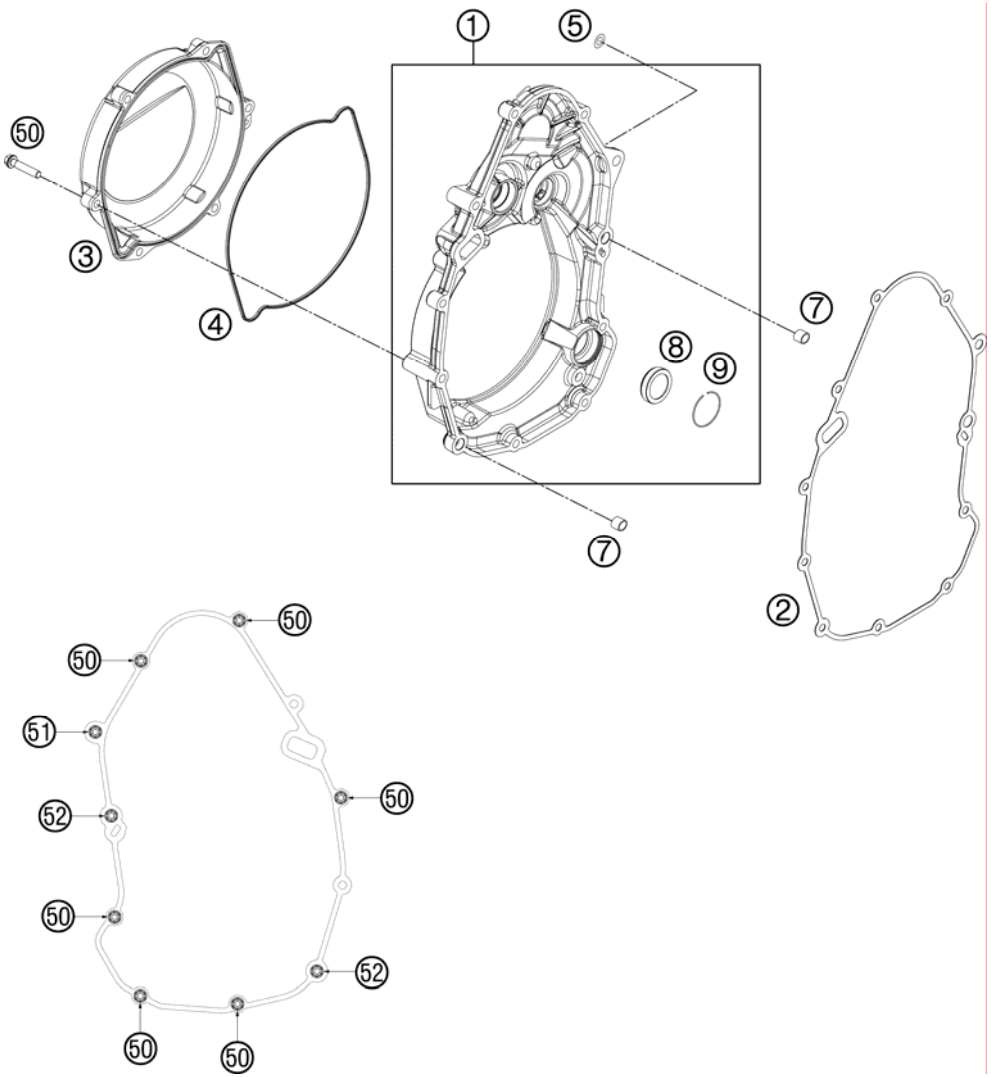

FIG	PART NUMBER	DESCRIPTION	QTY
1*	81230001244	CLUTCH COVER CPL.	1
2	81230025100	CLUTCH COVER GASKET	1
3*	81230026200	CLUTCH COVER OUTSIDE	1
4*	81230027100	MOLDED RING OUTER CLUTCH COVER	1
5	58030081000	CU-SEAL RING 8 X 14 X 3	1
7	49030090000	DOWEL 9,8 X 7 X 10	2
8*	78030095000	OIL LEVEL GLASS 30X8 07	1
9*	61030019050	CIRCLIP OIL LEVEL GLASS 03	2
50	0025060256	HH COLLAR SCREW M6X25 TX30	11
51	78030080000	LOCATING SCREW	1
52	0025060306	HH COLLAR SCREW M6X30 TX30	2

118123020 / C118123020

* NEW PART

X AS REQUIRED

SECONDARY AIR SYSTEM SAS

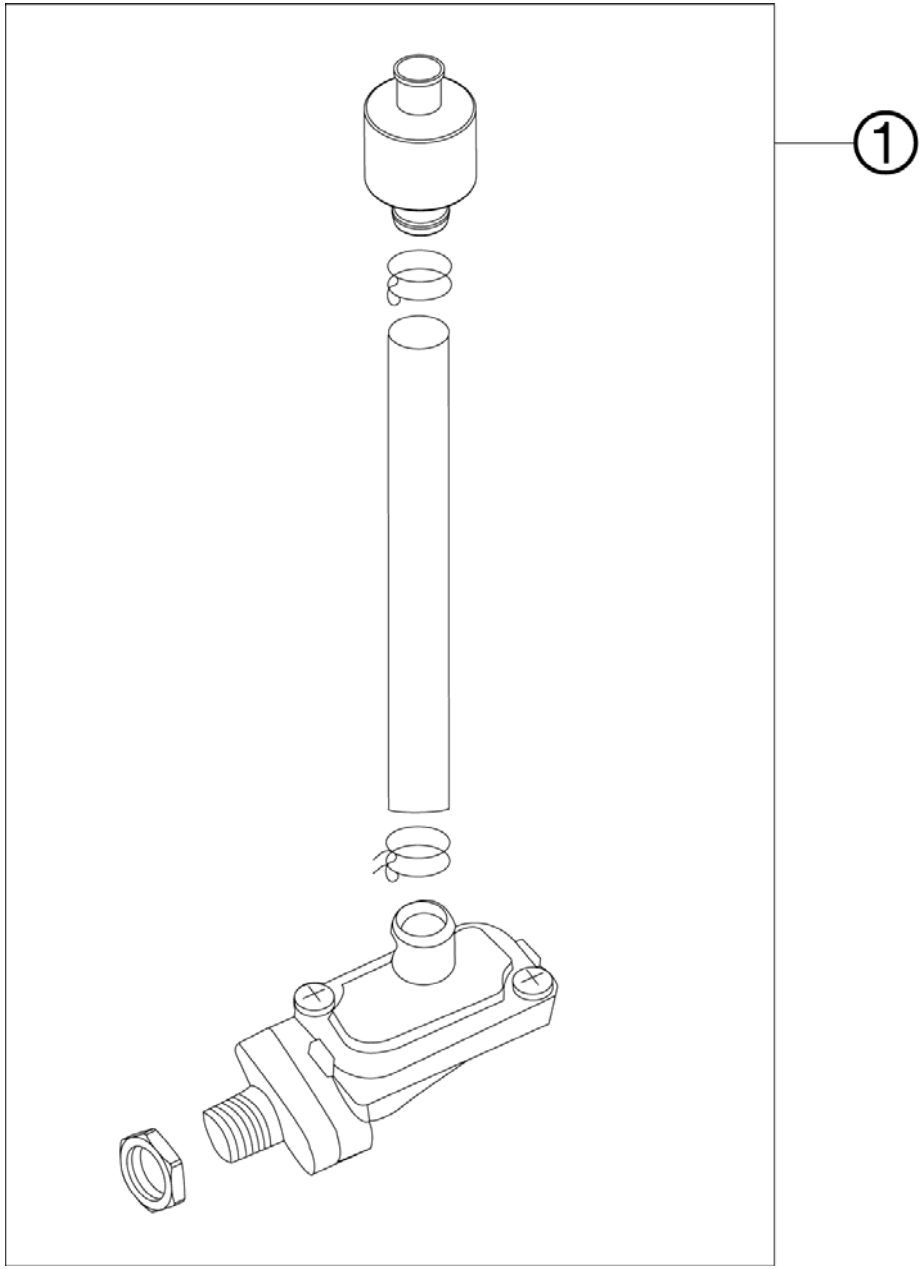

FIG	PART NUMBER	DESCRIPTION		QTY
1	78005024044	SAS-VALVE CPL. ONLY FOR EU	08	1

087803130 / C087803130

* NEW PART

X AS REQUIRED

CLUTCH

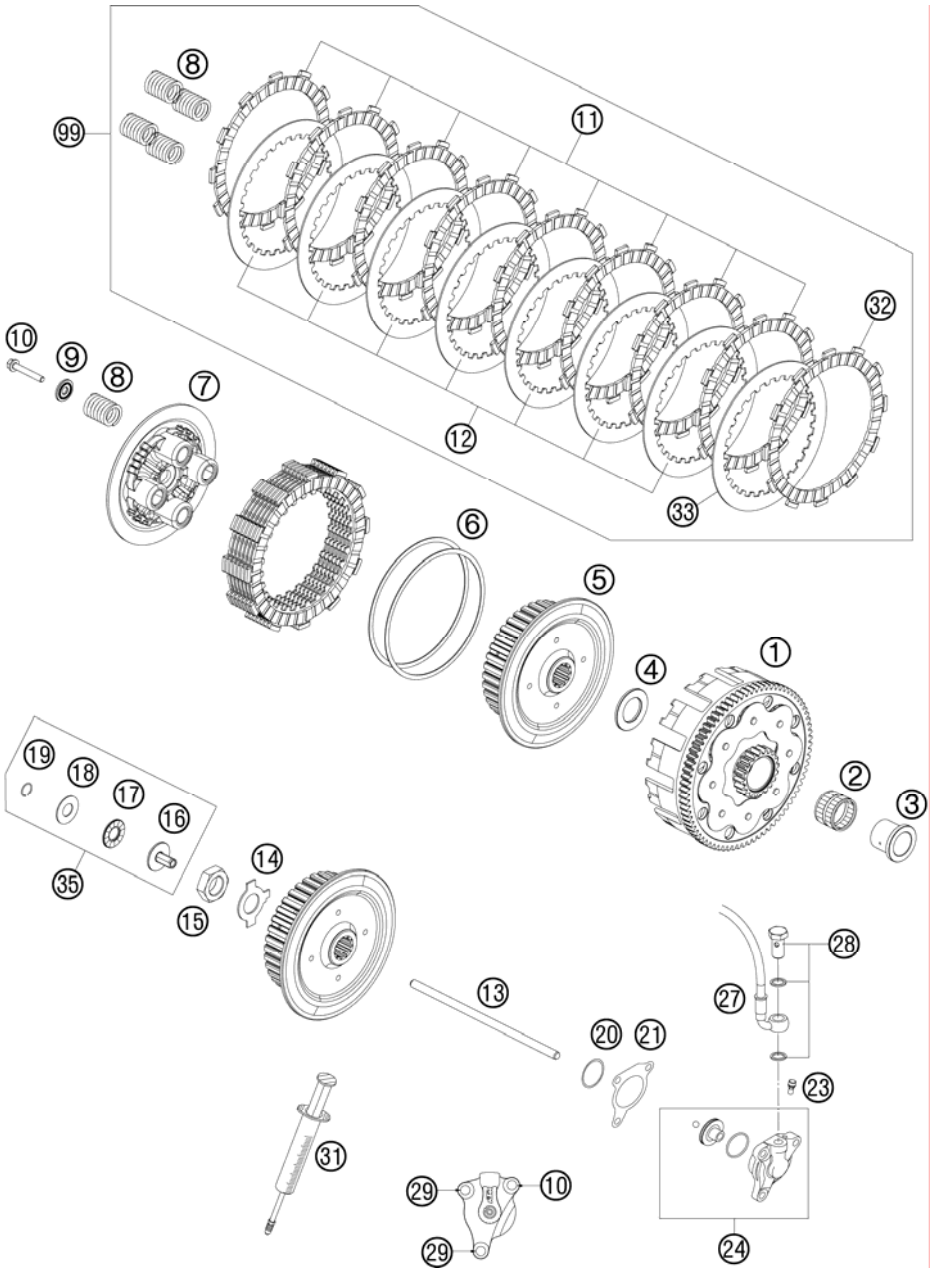

FIG	PART NUMBER	DESCRIPTION	QTY
1	78032001144	CLUTCH CAGE CPL. 2010	1
2	56532095000	NEEDLE BEARING K26X30X22ZW.KSE	1
3	78032015000	INNER RING	1
4	78032020000	STOP DISC 08	1
5	78032002200	INNER CLUTCH HUB	1
6	78032009000	JUDDER SPRING CPL.	1
7	78032003100	PRESSURE PLATE	1
8	78032005000	CLUTCH SPRING 08	4
9	58432081000	WASHER 6,5 X 20 X 2	4
10	0025060306	HH COLLAR SCREW M6X30 TX30	5
11	78032011000	LINING DISC 08	8
12	78032010100	FRICTION PLATE STEEL	7
13	78032054100	PUSH ROD L=186	1
14	77332018000	RETAINING PLATE	1
15	0936181505	HEXAGON NUT DIN0936-M18X1,5 R.	1
16	78032057000	PRESSURE PIECE	1
17	54637097200	AXIAL NEEDLE BEARING AXK 1226	1
18	54637098200	AXIAL WASHER AS1226 12X26X1	1
19	0993012000	CIRCLIP DIN7993-RW12	1
20	0770300015	O-RING 30,00X1,50 NBR 70	1
21	59032065000	GASKET FOR SLAVE CYLINDER	1
23	54732064000	BLEEDER SCREW WITH CAP	1
24	75032061044	OUTPUT CYL. WITH BLEEDER SCREW	1
27	81232063000	CLUTCH PIPE 09	1
28	59032062000	HOLLOW SCREW + COPPER GASKET	1
29	0025060206	HH COLLAR SCREW M6X20 TX30	2
31	50329050000	VENT INJEKTION HYDR. CLUTCH	1
32	78032111100	LINING DISC TURNED OFF	1
33	78032010200	STEEL DISC TEMPERED 1,4MM	1
35	78032057044	PRESSURE PIECE CPL. 08	1
99	78032011110	CLUTCH-KIT 400-450 EXC 09-11	x

108123210 / C108123211

* NEW PART

X AS REQUIRED

TRANSMISSION I - MAIN SHAFT

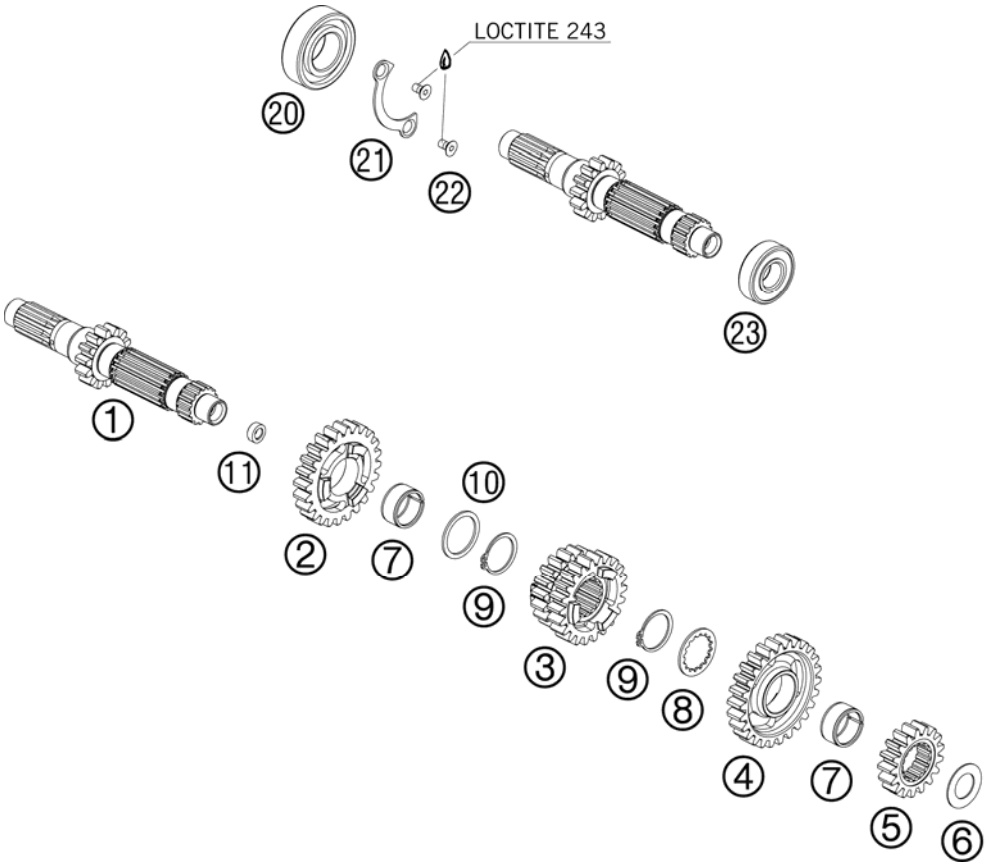

FIG	PART NUMBER	DESCRIPTION	QTY
1	78033001050	MAIN SHAFT 14 T	1
2	78033005100	IDLER GEAR 5. GEAR	1
3	78033003000	SLIDING GEAR 3/4 G. 08	1
4	78033006100	IDLER GEAR 6. GEAR	1
5	78033002000	SOLID GEAR 2.G. 08	1
6	56033030000	STOP DISC 17,2X30X1	1
7	0405222613	NEEDLE BEAR. K 22X26X13 TN	2
8	78033033000	STOP DISK 23 X 32 X 1,5	1
9	0471250120	CIRCLIP DIN0471-25X1,2	2
10	78033031000	STOP DISK 26 X 32 X 1,5	1
11	78033001110	BUSHING	1
20	0625062054	BALL BEARING 6205 C3 NTN	1
21	81233032000	LOCKING PLATE MAIN SHAFT	1
22	0019050103	%INT TORX FLAT HEAD M 5X10 8.8	2
23	0625062036	BALL BEARING 6203 RSH C3	1

098123330 / C108123332

* NEW PART

X AS REQUIRED

TRANSMISSION II - COUNTERSHAFT

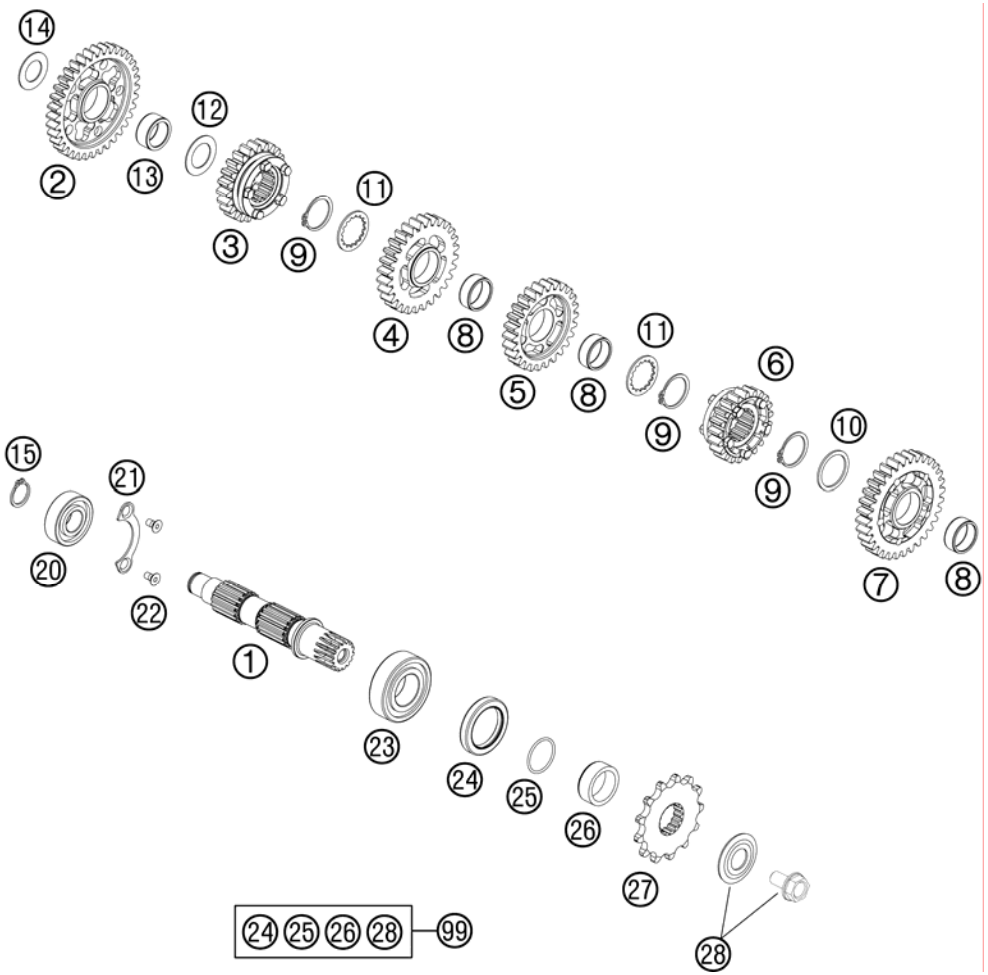

FIG	PART NUMBER	DESCRIPTION	QTY
1	78033010000	COUNTERSHAFT 08	1
2	78033011100	IDLER GEAR 1. GEAR	1
3	78033015000	SLIDING GEAR 5.G. 08	1
4	78033013000	IDLER GEAR 3.G. 08	1
5	78033014000	IDLER GEAR 4.G. 08	1
6	78033016000	SLIDING GEAR 6.G. 08	1
7	78033012100	IDLER GEAR 2. GEAR	1
8	0405222611	NEEDLE BEAR.K 22X26X10 DIVIDED	3
9	0471250120	CIRCLIP DIN0471-25X1,2	3
10	78033031000	STOP DISK 26 X 32 X 1,5	1
11	78033033000	STOP DISK 23 X 32 X 1,5	2
12	59033080000	SHIM 20X32X1	1
13	0405202612	NEEDLE BEARING K 20X26X12	1
14	56033030000	STOP DISC 17,2X30X1	1
15	0471170015	CIRCLIP DIN 0471-17X1, 5	1
20	0625062035	BALL BEARING 6203 JR2 C3	1
21	78033132000	TAB WASHER BEARING COUNT.SHAFT	1
22	0019050103	%INT TORX FLAT HEAD M 5X10 8.8	2
23	49030023000	CYL.ROLL BEARING NJ205	1
24	0760324571	SHAFT SEAL RING 32X45X7 BSLNBR	1
25	0770020220	O-RING 25,12X1,78 NBR70	1
26	54633014100	SPACER BUSHING 12MM	1
27	50033029013	FRONT SPROCKET 13-T	x
27	50033029014	FRONT SPROCKET 14-T	x
27	50033029015	FRONT SPROCKET 15-T	x
28	59033034044	SCREW 10.9+SPRING WASHER	1
99	00050000941	COUNTER SHAFT REP.KIT 4 STROKE	x

118123360 / C118123361

* NEW PART

X AS REQUIRED

SHIFTING MECHANISM

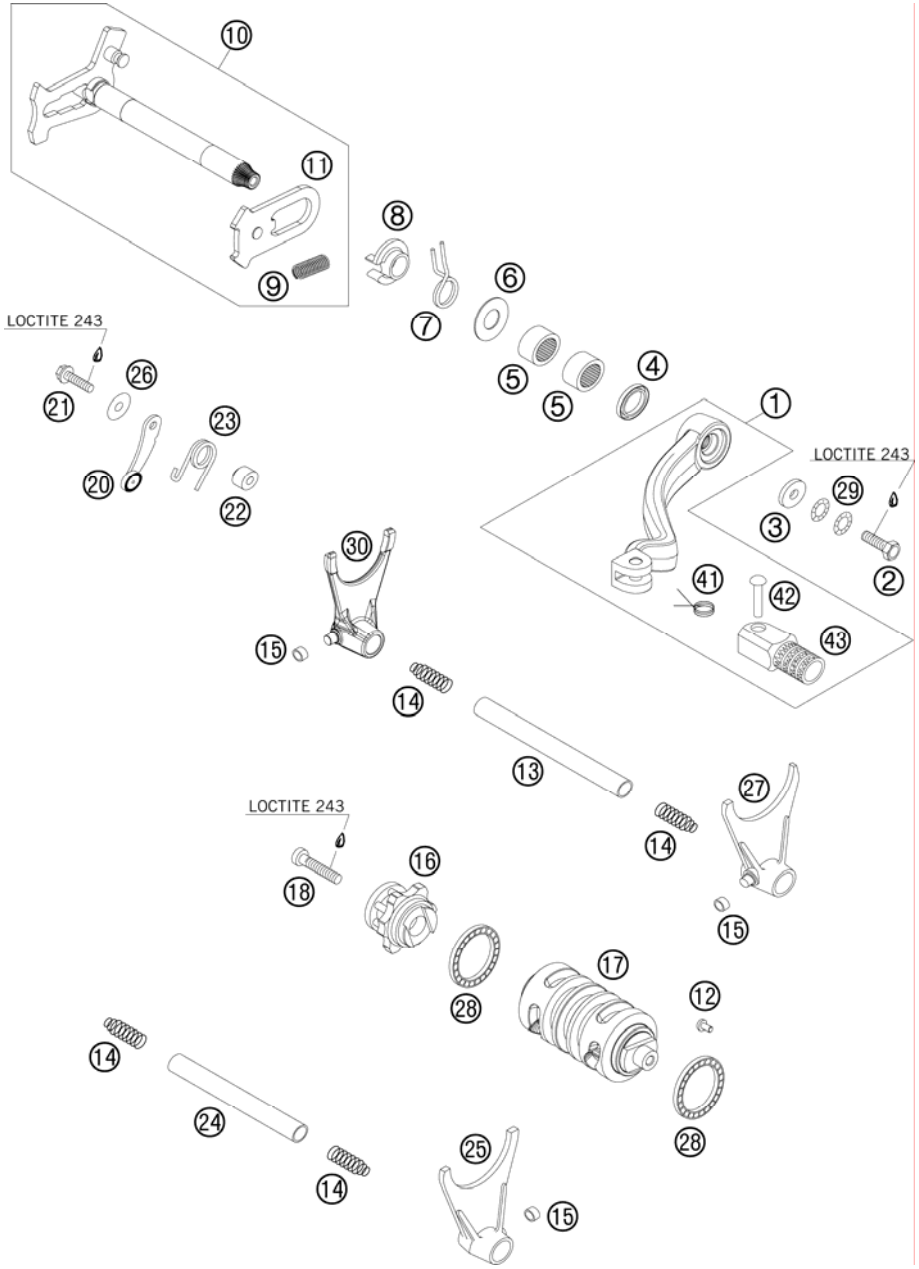

FIG	PART NUMBER	DESCRIPTION	QTY
1	54734031000	SHIFT LEVER CPL. 2-STROKE 2001	1
2	59009062016	SPECIAL SCREW M6X16 WS=8 10.9	1
3	50232050001	STEEL WASHER 6,4X17X3	1
4	0760142460	SHAFT SEAL RING 14X24X6 B	1
5	54632095000	NEEDLE BEAR.HK 1412 14X20X12	2
6	54634050000	STOP DISK 14X30X1	1
7	54634014100	RETURN SPRING 2,2MM '95	1
8	54634020000	SPRING GUIDE	1
9	56534013100	TENSIONING SPRING 0,8MM	1
10	78034005044	SHIFT SHAFT CPL.	1
11	54634008044	SLIDING PLATE CPL.	1
12	0018050103	INT. TORX OVAL HEAD M 5X10 8.8	1
13	78034020000	SHIFT RAIL 11,8X101,5	1
14	58038023200	PRESSURE SPRING 0,9MM	4
15	50334018100	SHIFTING ROLLER 6X8X5,2	3
16	78034015144	SHIFT DRUM LOCATING ALU CPL.	1
17	78034012000	SHIFT ROLLER	1
18	0012060303	% AH SCREW DIN6912 M6X30 8.8	1
20	77034024044	LOCKING LEVER CPL. 08	1
21	0025050206	HH COLLAR SCREW M5X20 TX30	1
22	54634052300	SLEEVE FOR LOCKING LEVER	1
23	60034023000	ARRESTING LEVER SPRING 03	1
24	78034019000	SHIFT RAIL 11,8X85	1
25	59034001000	SHIFT FORK 5./6.GEAR 2000	1
26	0349000050	WASHER DIN7349-5X15X2	1
27	59034002000	SHIFT FORK 2./4.GEAR 2000	1
28	0625618050	BALL BEARING 61805 C3	2
29	50233041000	PAIR OF WASHERS M 6 NORDLOCK	1
30	78034003000	SHIFTING FORK 1ST/3RD GEAR	1
41	54634032100	SHIFTING LEVER SPRING 250	1
42	54634031050	BOLT 6X25 FOR SHIFT LEVER	1
43	54634131000	STEP PLATE FOR SHIFT LEVER 250	1

098123410 / C098123410

* NEW PART

X AS REQUIRED

WATER PUMP

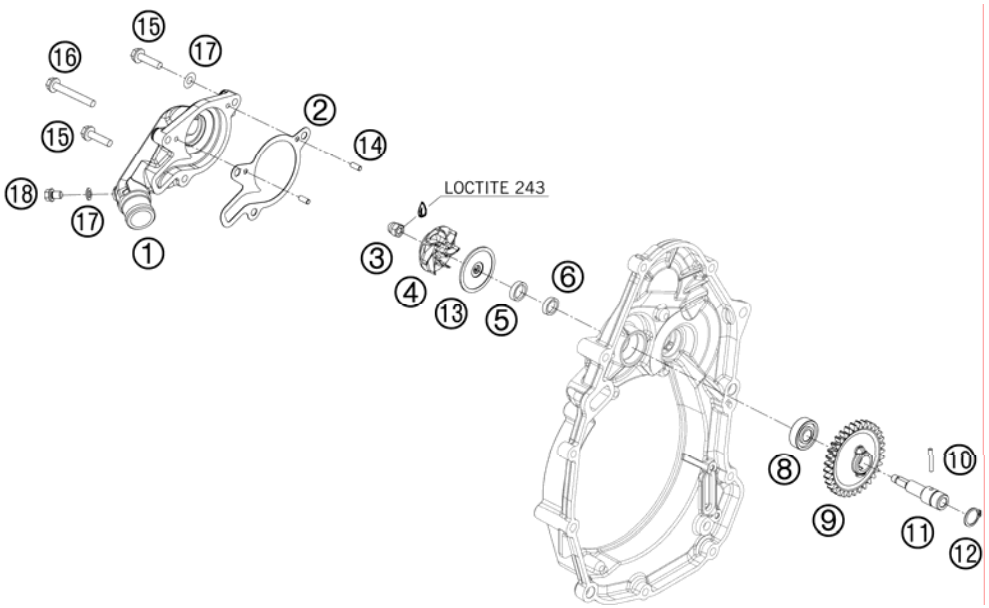

FIG	PART NUMBER	DESCRIPTION	QTY
1	81235052100	WATERPUMP COVER	1
2	81235053200	WATER PUMP COVER GASKET	1
3	0587060002	% HH CAP NUT DIN1587-M 6 SS.	1
4	81235055020	WATER PUMP ROTOR	1
5	0760102455	SHAFT SEAL RING 10X24X5,5	1
6	0760102440	SHAFT SEAL RING 10X24X4	1
8	0625060001	BALL BEARING 6000/C3	1
9	78035054001	DRIVE WHEEL WAPU PLASTIC MAT.	1
10	0402032180	NEEDLE ROLLER DIN5402 3X21,8	1
11	81235054100	WATER PUMP SHAFT	1
12	0471140100	LOCK WASHER DIN0471-14X1	1
13	81235055110	DISC WATER PUMP	1
14	0402040980	NEEDLE ROL.DIN5402 NRB 4X9,8	2
15	0025060256	HH COLLAR SCREW M6X25 TX30	2
16	0025060556	HH COLLAR SCREW M6X55 TX30	1
17	0603061001	CU-SEAL RING DIN7603-6X10X1	2
18	0025060086	HH COLLAR SCREW M6X8 TX30	1

098123510 / C108123511

* NEW PART

X AS REQUIRED

COOLING SYSTEM

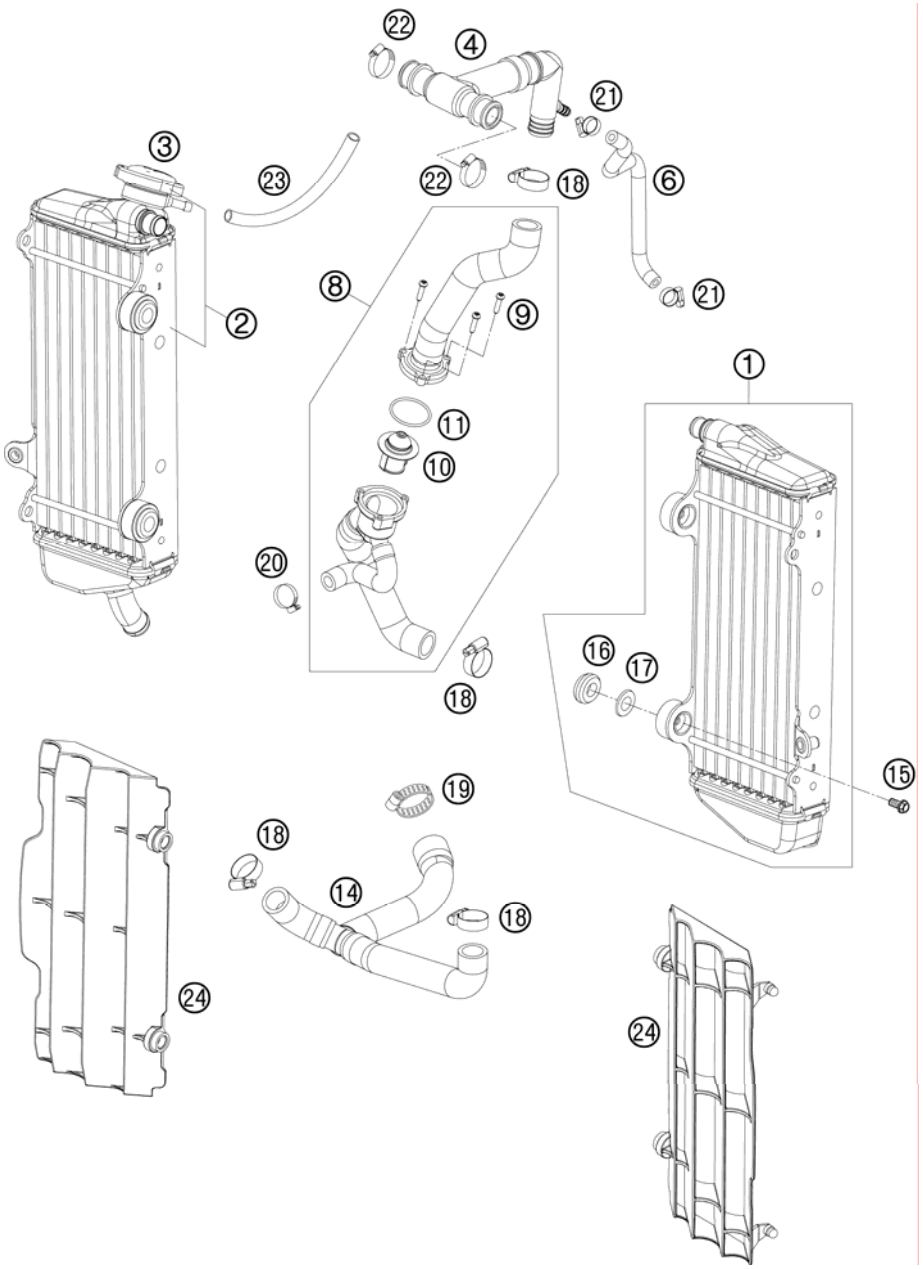

FIG	PART NUMBER	DESCRIPTION	QTY
1	77335007000	RADIATOR L/S "45519U" 07	1
2	78035008000	RADIATOR R/S "45556" 08	1
3	77335016000	RADIATOR CAP SMALL 1,8 BAR	1
4	81235026044	T-CONNECTOR INCL. ANGLE PIECE	1
6	81235029000	BREATHER HOSE	1
8	81235013144	THERMOSTAT WITH COOLER HOSES	1
9	0016040183	SCREW FOR PLASTIC D=4X18	3
10	59435017000	THERMOSTAT 70 DEGREE 04	1
11	0770320020	O-RING 32,00X2,00	1
14	81235027033	RADIATOR HOSE W. Y-CONNECTOR	1
15	0023060123	COLLAR SCREW M6X12 TX	4
16	41001052000	RUBBER SLEEVE D=12MM	4
17	77335001000	WASHER FOR RADIATOR 08	4
18	10001020000	HOSE CLAMP GEMI 16-27	4
19	76235028000	HOSE CLAMP GEMI 20-32 MM	1
20	58335099000	HOSE CLAMP GEMI 10-16	1
21	81235099000	HOSE CLAMP 8-12 NORMA	2
22	42013037400	HOSE CLAMP NORMA 12/24	2
23	55007016001	PVC-HOSE 7X10 PER METER	x
24	7733503400030	RADIATOR PROTECTION BLACK 07	2

098123530 / C108123531

* NEW PART

X AS REQUIRED

TIMING DRIVE

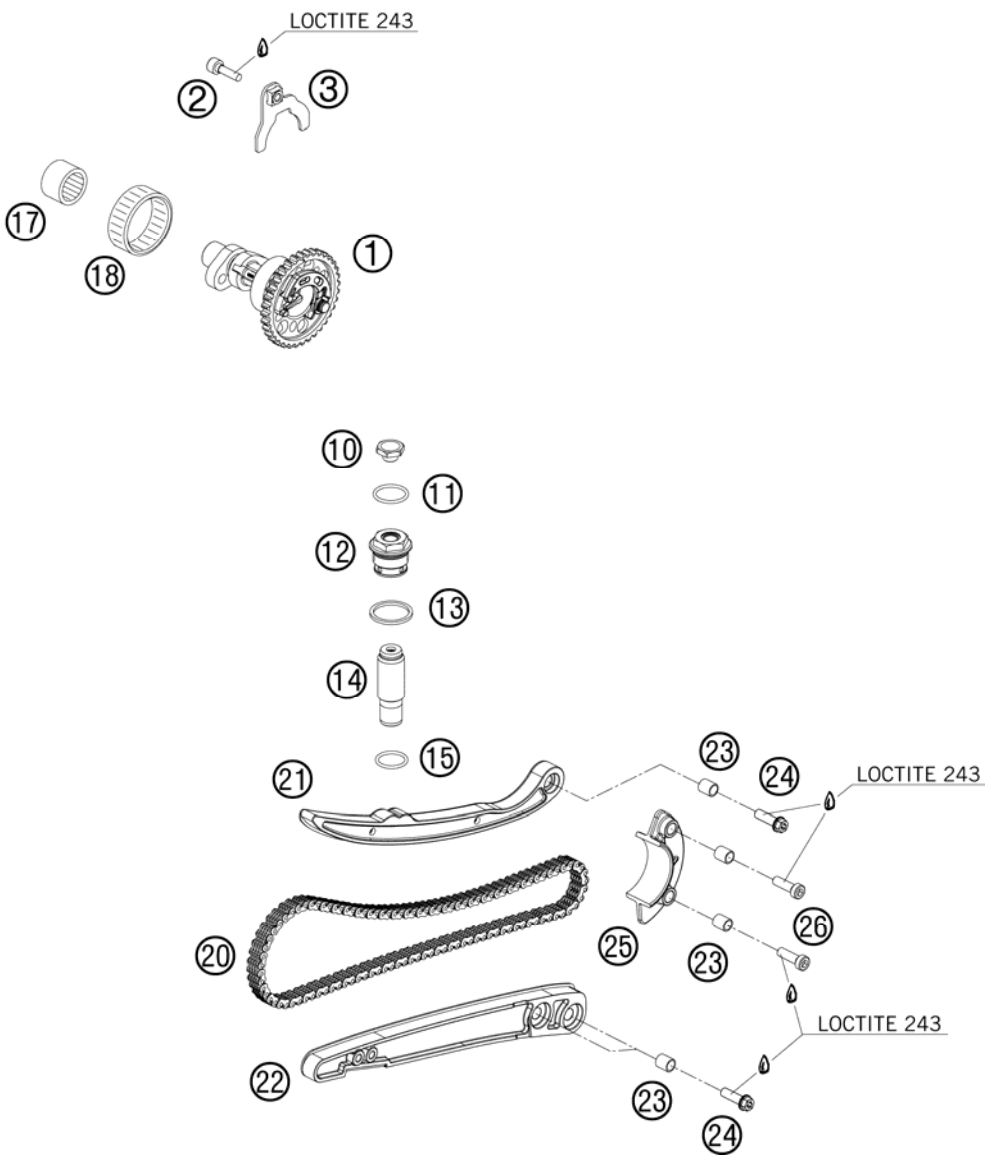

FIG	PART NUMBER	DESCRIPTION	QTY
1	78036010333	CAMSHAFT W. AUTODECO	1
2	0912060208	AH SCREW DIN0912-M 6X20 SS	1
3	78036012033	RETAINING PLATE CAMSHAFT CPL.	1
10	77336008010	HOLDING BOLT	1
11	0770010010	O-RING 10,00X1,00 NBR 70 SH	1
12	78036008100	CHAIN ADJUSTER HOLDING BOLT	1
13	0603242920	CU SEAL-RING DIN7603 A24X29X2	1
14	77036003100	CHAIN ADJUSTER	1
15	0770180020	O-RING 18,00X2,00 NBR 70	1
17	0618182414	NEEDLE SLEEVE HK1814RS18/24/14	1
18	0618404712	NEEDLE SLEEVE HK4012B40X47X12	1
20	78036013000	TIMING CHAIN 110T 08	1
21	81236002000	TENSIONING RAIL	1
22	81236001000	CHAIN GUIDE	1
23	77036001050	SPACER BUSHING 6.1X8.2X9.1 05	5
24	0025060206	HH COLLAR SCREW M6X20 TX30	3
25	81236005000	CHAIN SKIP PROTECTION	1
26	0984060203	AH SCREW DIN6912-M 6X20 8.8	2

098123620 / C108123622

* NEW PART

X AS REQUIRED

VALVE DRIVE

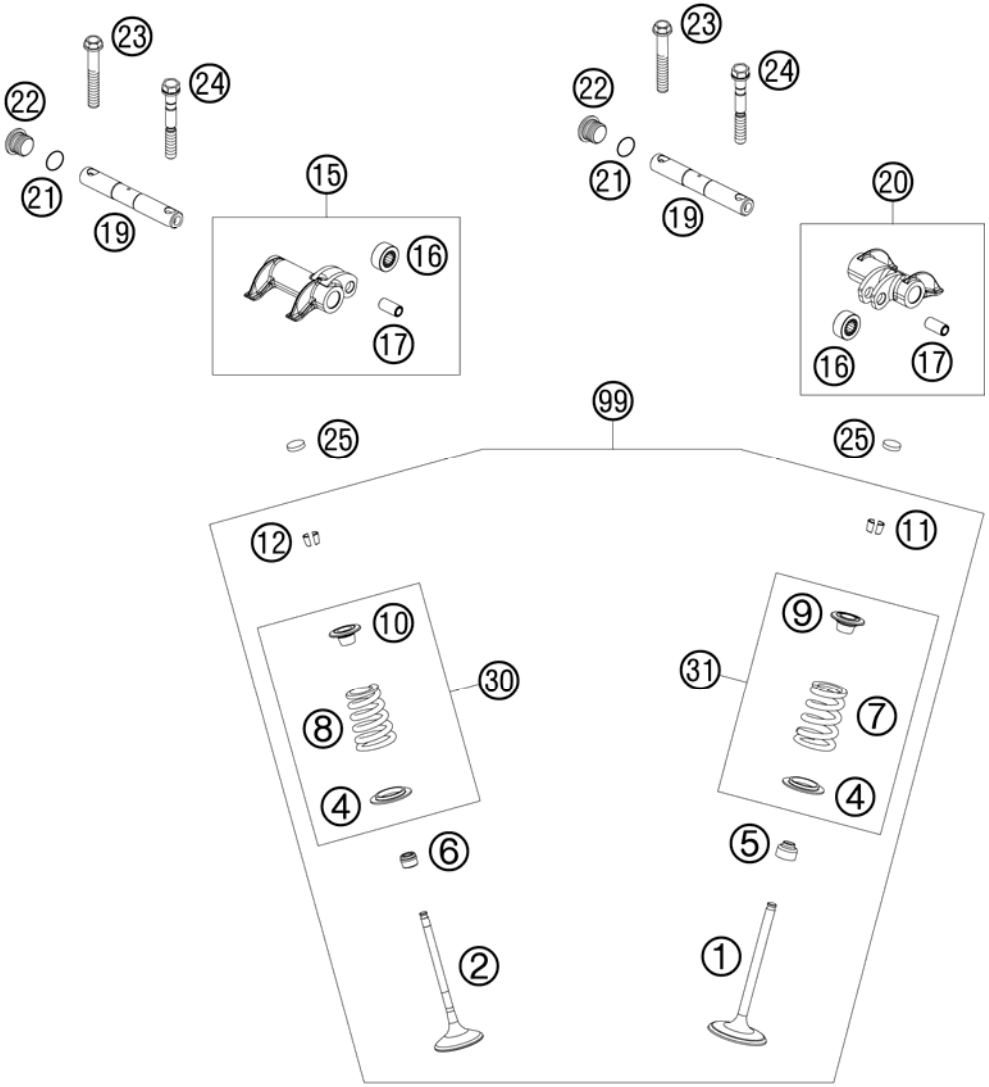

FIG	PART NUMBER	DESCRIPTION	QTY
1	78036030000	INTAKE VALVE	2
2	78036031000	EXHAUST VALVE	2
4	78036136000	VALVE SPRING HOLDER EXHAUST	4
5	59036027000	VALVE-STEM SEALING RACING	2
6	77036027000	VALVE-STEM SEALING 05	2
7	78036028000	VALVE SPRING INTAKE	2
8	78036029000	VALVE SPRING EXHAUST	2
9	78036132200	VALVE SPRING RETAINER INTAKE	2
10	78036032200	VALVE SPRING RETAINER EXHAUST	2
11	78036033000	VALVE COLLET LK 6H	4
12	77036033000	VALVE COLLET 05	4
15	78036061044	ROCKER ARM EXHAUST CPL.	1
16	59036061091	ROCKER ARM ROLLER	2
17	78036061092	BEARING BOLT ROCKER ARM ROLLER	2
19	78036056100	ROCKER ARM SHAFT	2
20	78036060044	ROCKER ARM INTAKE CPL.	1
21	0770110015	O-RING 1,5x11 SILICON	2
22	78036081000	HOLDING BOLT M14X1,5	2
23	77036080000	SPECIAL SCREW M7X40 WS10	2
24	78036080000	FIT BOLT M7X1X55	2
25	60036035200	SHIM D=10/2,00 03	x
25	60036035205	SHIM D=10/2,05 03	x
25	60036035210	SHIM D=10/2,10 03	x
25	60036035215	SHIM D=10/2,15 03	x
25	60036035220	SHIM D=10/2,20 03	x
25	60036035280	SHIM D=10/2,80 03	x
25	60036035285	SHIM D=10/2,85 03	x
25	60036035290	SHIM D=10/2,90 03	x
25	60036035295	SHIM D=10/2,95 03	x
25	60036035300	SHIM D=10/3,00 03	x
25	60036035305	SHIM D=10/3,05 03	x
25	60036035310	SHIM D=10/3,10 03	x
25	60036035315	SHIM D=10/3,15 03	x
25	60036035320	SHIM D=10/3,20 03	x
25	60036035330	SHIM D=10/3,3	x

087803610 / C118123610

* NEW PART

X AS REQUIRED

VALVE DRIVE

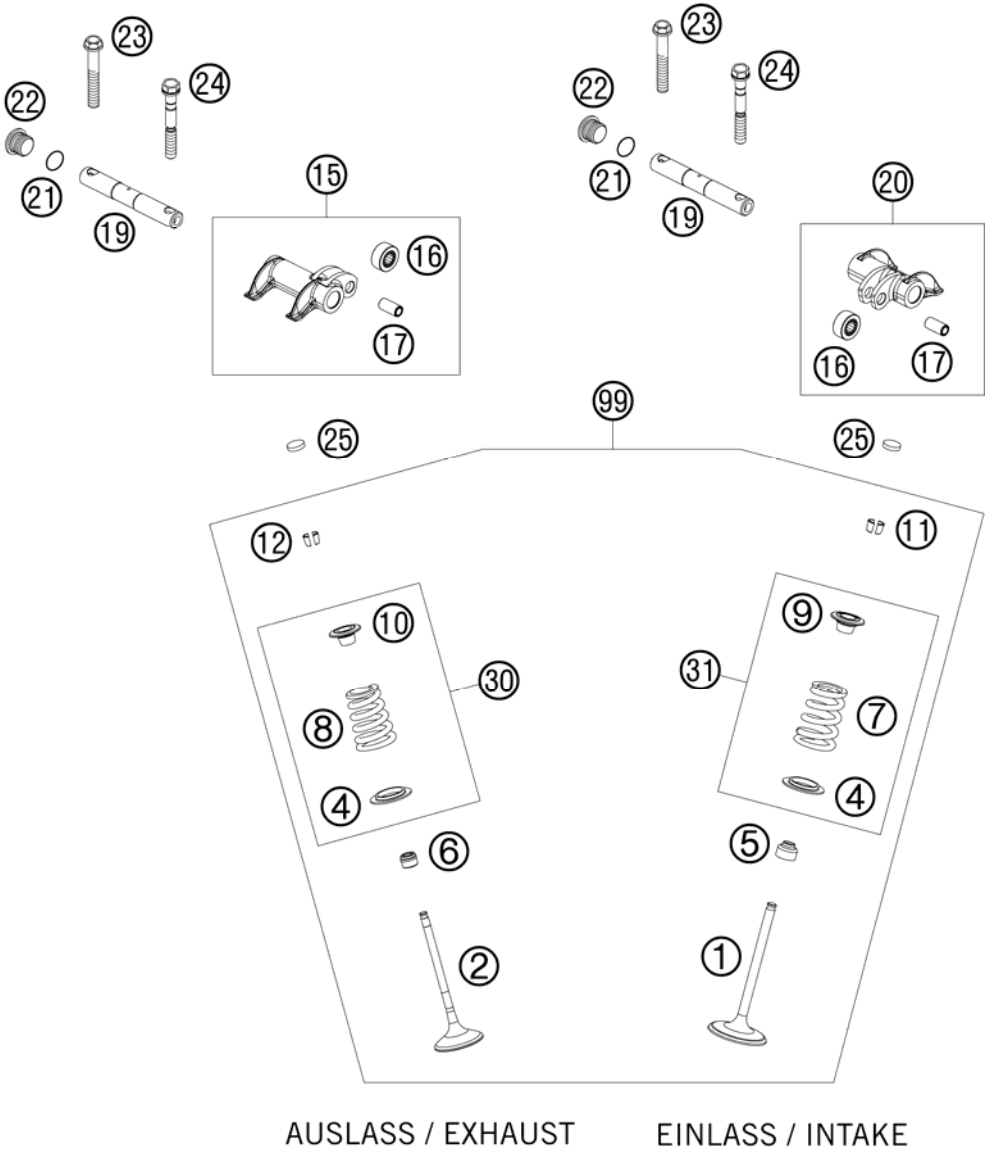

FIG	PART NUMBER	DESCRIPTION		QTY
25	60036035225	SHIM D=10/2,25	03	x
25	60036035230	SHIM D=10/2,30	03	x
25	60036035235	SHIM D=10/2,35	03	x
25	60036035240	SHIM D=10/2,40	03	x
25	60036035245	SHIM D=10/2,45	03	x
25	60036035250	SHIM D=10/2,50	03	x
25	60036035255	SHIM D=10/2,55	03	x
25	60036035260	SHIM D=10/2,60	03	x
25	60036035265	SHIM D=10/2,65	03	x
25	60036035270	SHIM D=10/2,70	03	x
25	60036035275	SHIM D=10/2,75	03	x
30	78036029144	VALVE SPR.-KIT EX. 450-503	09	2
31	78036028144	VALVE SPR.-KIT INT. 450-530	09	2
99	78036030010	VALVE KIT 450/530 EXC/R	08-12	x

087803610 / C118123610

* NEW PART

X AS REQUIRED

CYLINDER HEAD

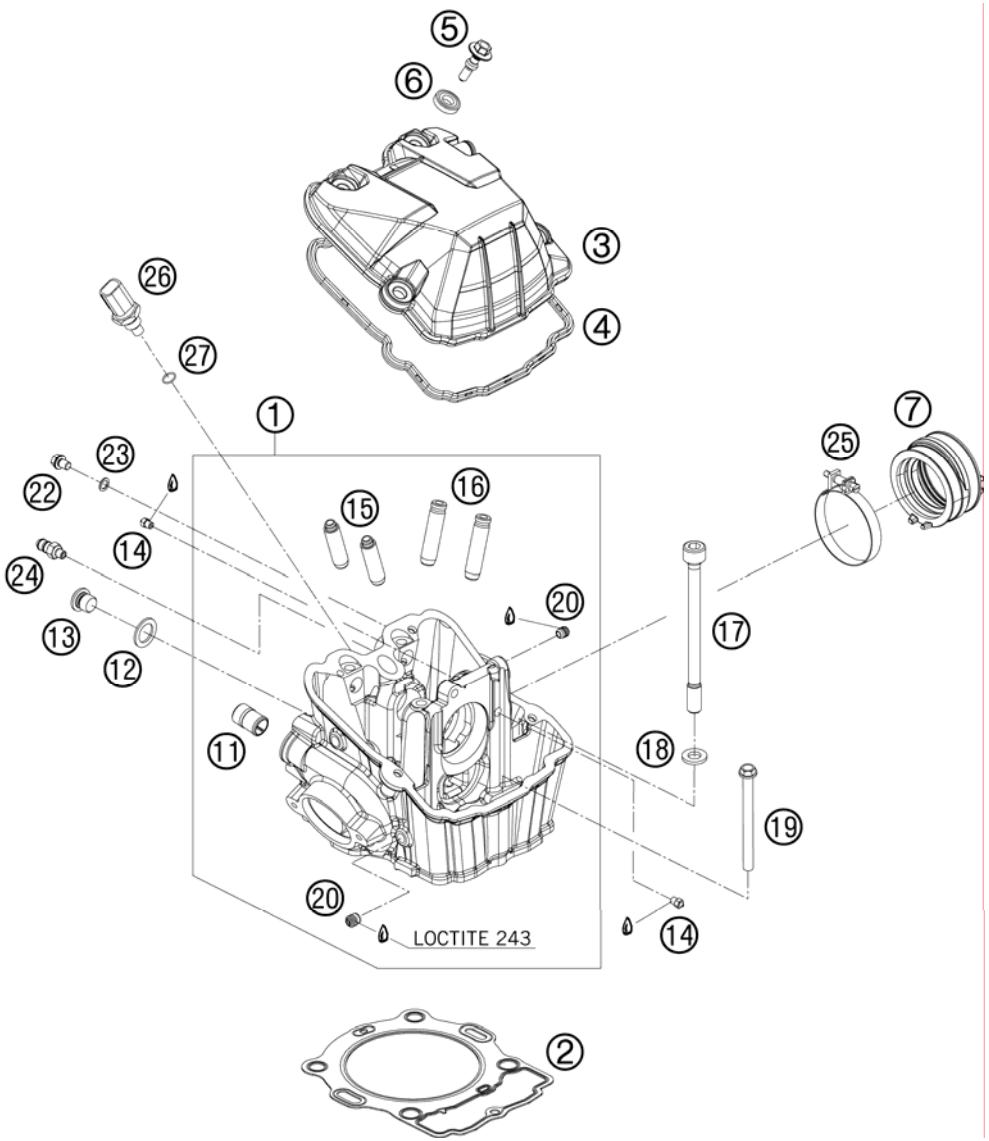

FIG	PART NUMBER	DESCRIPTION	QTY
1	81236020044	CYLINDER HEAD CPL.	1
2	78030036000	CYLINDER HEAD GASKET 08	1
3	7803605200033	VALVE COVER BLACK MATT	1
4	78036053000	VALVE COVER GASKET	1
5	78036054100	VALVE COVER SCREW	4
6	75036052010	DECOUPLING ELEMENT 07	4
7	81236044100	CONNECTION RUBBER EFI	1
11	58030010200	SCREW IN NOZZLE M20X1,5	1
12	58038022000	CU-SEAL RING DIN7603-12X18X1,5	1
13	78036024000	PLUG SCREW SAS M12X1,5	1
14	60030063070	OIL JET 70 M5	2
15	78036026001	VALVE GUIDE EXHAUST	2
16	78036025001	VALVE GUIDE INTAKE	2
17	78030044000	CYL. HEAD SCREW M10X1,25 L=125	4
18	77336089010	WASHER 19X10,5X2,5	4
19	0025060756	HH COLLAR SCREW M6X75 TX30	1
20	59030296000	SCREW PLUG	2
22	0025060086	HH COLLAR SCREW M6X8 TX30	1
23	0603061001	CU-SEAL RING DIN7603-6X10X1	1
24	58336020290	VACUUM CONNECTION M6X1 ALU AH	1
25*	61036047000	HOSE CLAMP GEMI 63MM 05	1
26	60011252000	TEMPERAT.-SENSOR WATER LC8 02	1
27	0770100020	O-RING 10,00X2,00 SILCONE	1

098123630 / C118123630

* NEW PART

X AS REQUIRED

LUBRICATING SYSTEM

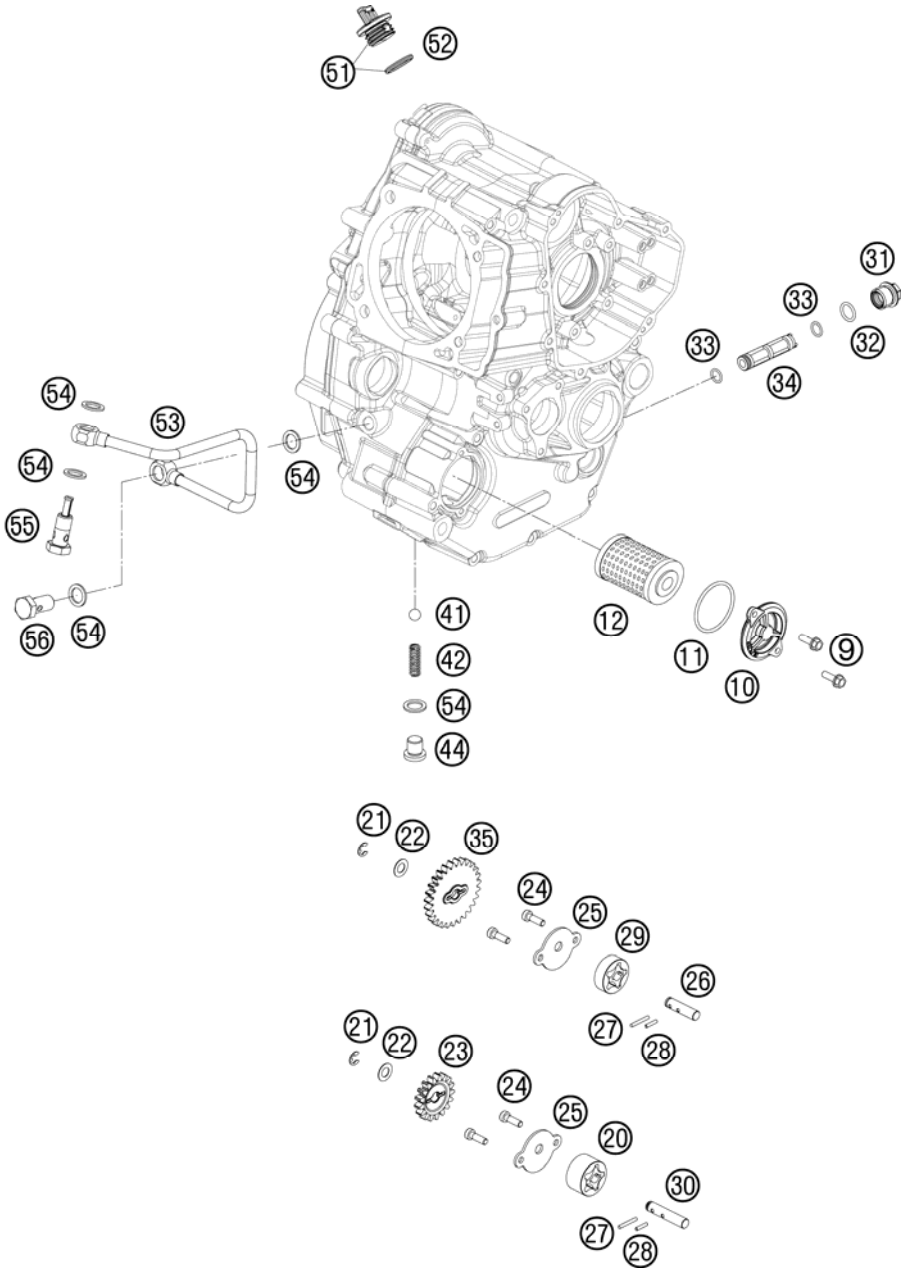

FIG	PART NUMBER	DESCRIPTION	QTY
9	0025050166	HH COLLAR SCREW M5X16 TX30	2
10	75038041200	OILFILTER CAP	1
11	0770039026	% O-RING 39,34X2,62 NBR 70 SH	1
12	77038005044	OIL FILTER WITH GASKET 06	1
20	59038011012	OILPUMP ROTOR 12MM G-95R/003	1
21	0799060000	TAB WASHER DIN6799-RS 6,0	2
22	58038007755	STOP DISK 8,1 X 15 X 0,5	2
23	78038001017	OIL PUMP GEAR 17 T	1
24	0984050123S	CYLIND. SCR. DIN6912 M5X12 8.8	4
25	81238003000	OIL PUMP COVER	2
26	78038002000	OIL PUMP SHAFT TRANSM. PUMP	1
27	0402251980	NEEDLEROL.DIN5402 NRA 2,5X19,8	2
28	0402251180	NEEDLE ROLLER DIN5402 2,5X11,8	2
29	59038011010	OILPUMP ROTOR CPL. 10MM G-73R	1
30	81238102000	OIL PUMP SHAFT DP	1
31	78038018000	SCREW PLUG M17	1
32	0770125020	O-RING 12,50X2,00 NBR 70	1
33	0770090015	O-RING 9X1,5 NBR	2
34	78038015000	OIL SCREEN 12,5X56,5MM	1
35	78038001027	OIL PUMP GEAR 27T	1
41	0401090003	BALL DIN5401-9	1
42	58038023300	PRESSURE SPRING L=25MM D=1MM	1
44	0908120153	PLUG DIN0908-M12X1,5	1
51	58030020100	PLUG CPL. M24X3	1
52	0770191015	O-RING 19,00X3,00 NBR	1
53	81238035000	OIL PIPE	1
54	58038022000	CU-SEAL RING DIN7603-12X18X1,5	5
55	81238016000	HOLLOW SCREW M12 W. STRAINER	1
56	0643120243	HOLLOW SCREW DIN7643-8 M12X1,5	1

098123810 / C098123810

* NEW PART

X AS REQUIRED

INGNITION SYSTEM

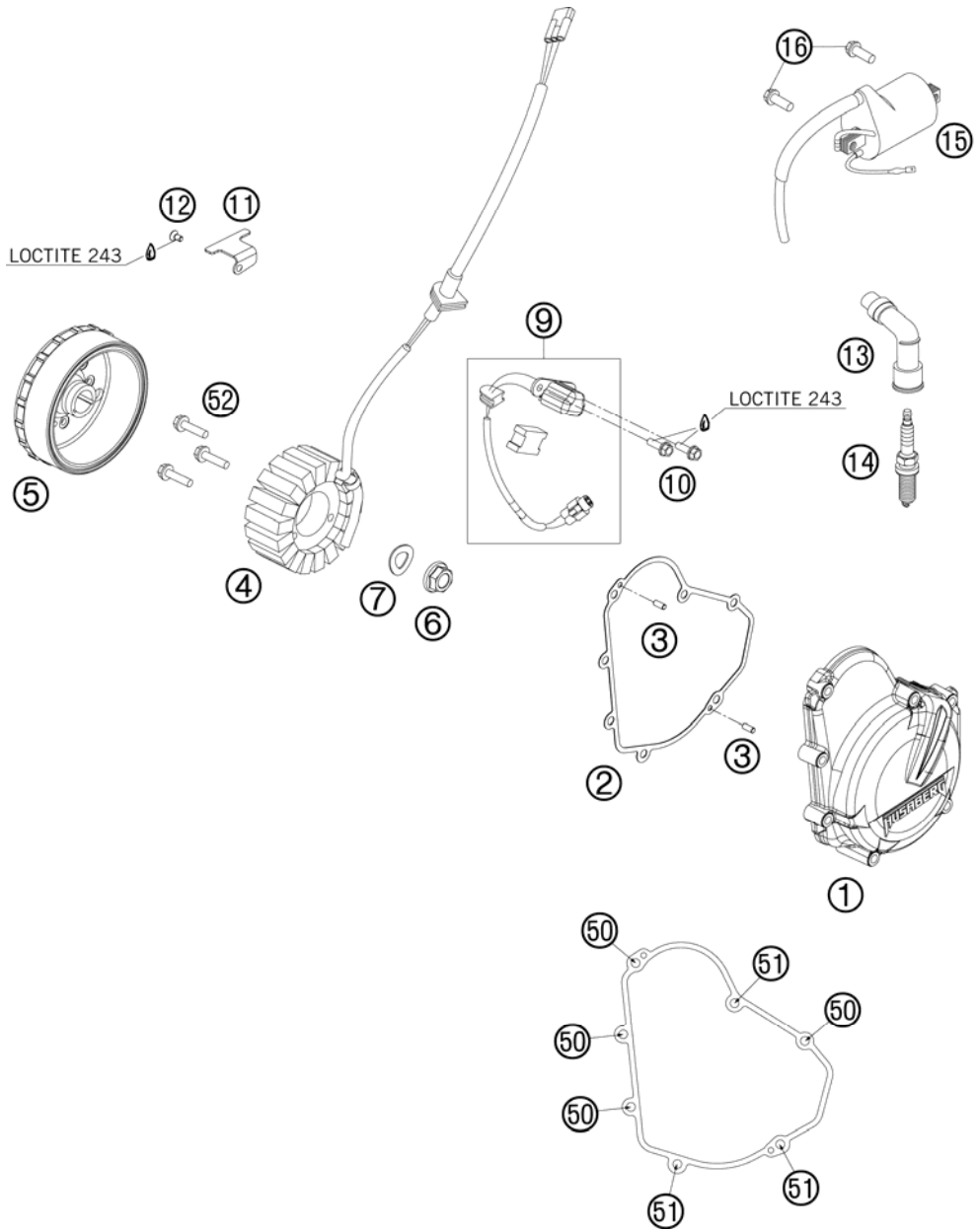

FIG	PART NUMBER	DESCRIPTION	QTY
1	81230002100	IGNITION COVER	1
2	81230040000	IGNITION COVER GASKET	1
3	0402040980	NEEDLE ROL.DIN5402 NRB 4X9,8	2
4	83039004000	STATOR	1
5	78039205000	ROTOR EXC 08	1
6	49030021000	COLLAR NUT M12X1 R/S	1
7	0137120000	SPRING WASHER DIN0137-B12	1
9	81239034044	PULSER COIL INCL. ADAPTER	1
10	0025050166	HH COLLAR SCREW M5X16 TX30	2
11	81230002010	RETAINING PLATE	1
12	0991040083S	FLAT HEAD SCREW DIN7991-M 4X8	1
13	78039090000	SPARK PLUG CONNECT. AP-TRS1908	1
14	75039093000	SPARK PLUG M12X1,25 LKAR8AI-9	1
15	58439006000	IGNITIONCOIL IG3826 KOKUSAN'96	1
16	0025060166	HH COLLAR SCREW M6X16 TX30	2
50	0025060306	HH COLLAR SCREW M6X30 TX30	4
51	0025060506	HH COLLAR SCREW M6X50 TX30	3
52	0025050306	HH COLLAR SCREW M5X30 TX30	3

108123910 / C108123911

* NEW PART

X AS REQUIRED

ELECTRIC STARTER

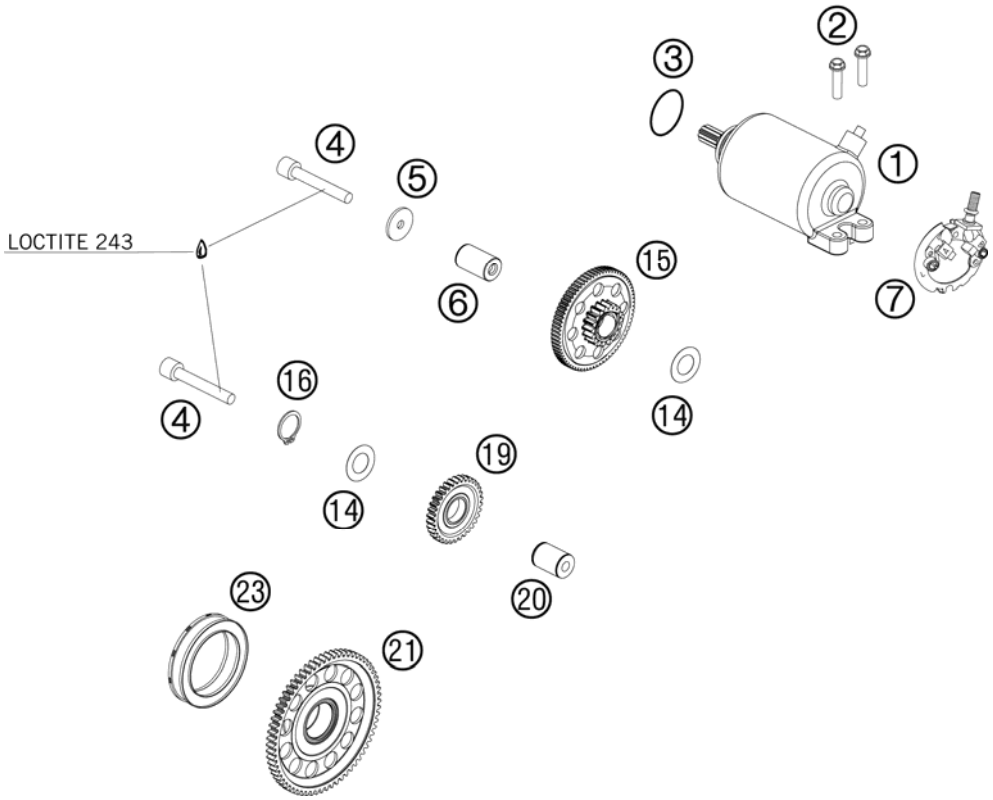

FIG	PART NUMBER	DESCRIPTION	QTY
1	78040001000	E-START. ENGINE CPL. 0,45KW 08	1
2	0025060206	HH COLLAR SCREW M6X20 TX30	2
3	0770020220	O-RING 25,12X1,78 NBR70	1
4	0912060404	AH SCREW DIN0912-M 6X40 A2	2
5	78040016004	STOP DISC 6X23X2	1
6	78040029000	BEARING BOLT	1
7	78040002000	BRUSH HOLDER F. STARTER	1
14	0988172405	SHIM WASHER DIN0988-17X24X0,5	2
15	81240016100	TORQUE LIMITER CPL.	1
16	0471170010	CIRCLIP DIN0471-17X1	1
19	78040022000	IDLER GEAR 30-T CPL.	1
20	78040028000	BUSHING PIN	1
21	78040020133	FREEWHEEL GEAR CPL.	1
23	75040026000	FREE WHEEL	1

098124010 / C098124010

* NEW PART

X AS REQUIRED

THROTTLE BODY

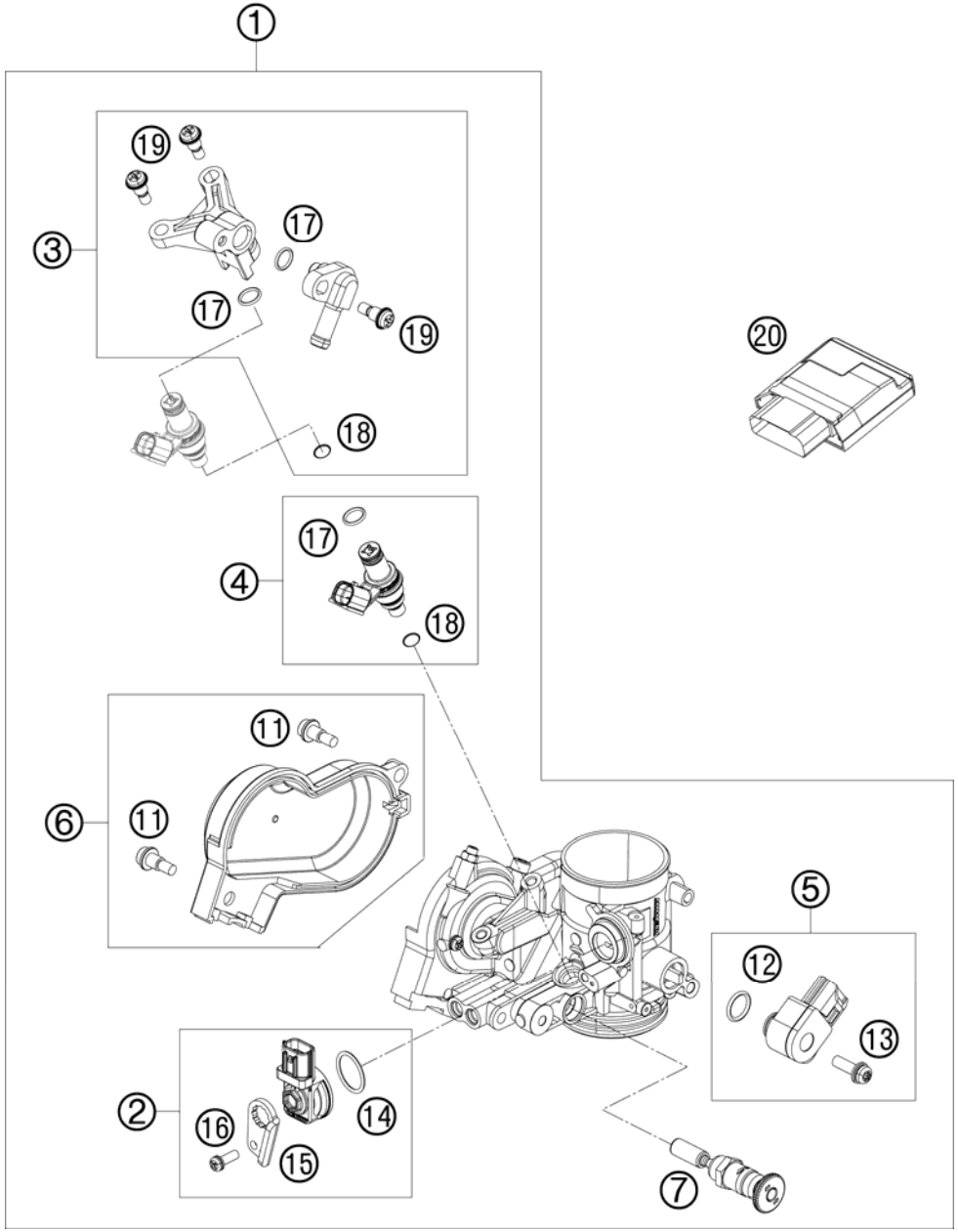

FIG	PART NUMBER	DESCRIPTION	QTY
1	81241001000	THROTTLE BODY	1
1	81241101000	THROTTLE BODY FX ONLY FOR USA	1
2	81241085044	MAP SENSOR CPL. 09	1
3	81241013044	FUEL RAIL CPL. 09	1
4	75041023044	% FUEL INJECTOR ASSY SET 07	1
5	81241077044	TPS KPL. 09	1
6	81241056044	THROTTLE COVER CPL. 09	1
7	81241060000	STARTER VALVE COMP.	1
11	81241056020	SPECIAL SCREW AH	2
12	61041077010	O-RING THROTTLE POS. SENSOR	1
13	81241077030	SPECIAL SCREW	1
14	75041085010	O-RING	1
15	81241085020	PLATE 09	1
16	81241085030	SPECIAL SCREW	1
17	75041023020	O-RING	2
18	75041023010	SEAL RING	1
19	75041013010	SCREW SHOULDER	3
20	81241031000	TIMING CHARGER EFI	1

098124110 / C098124110

* NEW PART

X AS REQUIRED

NOTICE

KTM Group Partner

3CM090030KEN

Art.Nr.: 3CM090030KEN 1/2012

HUSABERG – a company of the KTM Group

A-5230 Mattighofen

www.husaberg.cc