INDEX

INTRODUCTION	Page 2-		1
SAFETY AND PRECAUTIONS	Page 4-		2
GENERAL INFORMATION	Page 6-		3
MAINTENANCE SCHEDULE	Page 9-		4
CONTROLS	Page 12-		5
STARTING PROCEDURE	Page 15		6
ENGINE	Page 16-	A LUBRICATION SYSTEM B IGNITION C AIR FILTER D VALVE ADJUSTMENT	7
FUEL & COOLING	Page 20-	A CARBURETTOR B FUEL C COOLING SYSTEM	8
CLUTCH & DECOMPRESSION	Page 22		9
WHEELS & BRAKES	Page 23-	A WHEELS B CHAIN C BRAKES	10
SUSPENSION	Page 28-	A SUSPENSION B STEERING HEAD C SWINGARM	11
WIRING DIAGRAMS	Page 31-		12

Downloaded from www.Manualslib.com manuals search engine

1 INTRODUCTION

Please read and observe the following:

Warning

If the engine has to be running during any maintenance, make sure that the area is properly ventilated. Never run the engine in a closed area though the exhaust fumes are posionous and thus hazardous to your health and life.

Warning

Although the battery is of a sealed construction, please take care. The electrolyte contains sulfuric acid and you must protect your eyes, skin and clothing if such fluid is assumed to be leaking or likewise exposed. In case of contact, wash and flush thoroughly with water and contact medical help if needed, especially if your eyes have been exposed to the fluid.

Warning

Fuel is extremely flammable and explosive under certain conditions. Do not smoke or expose the fuel to open fire or sparks.

SERVICE CONDITIONS:

1. Always use original Husaberg parts.
2. Use the special Husaberg tools when required.
3. Install new gaskets, o-rings, circlips etc whenever possible.
4. Always clean all parts thoroughly before assembly.
5. All screws, nuts and bolts etc. are in the metric system. Do not use incorrect tools.

PRINT & COPY RIGHTS

The material and information included in this Owner's Manual are all of the latest editions available at the time of the printing.

Husaberg Motor AB reserves the right to make changes regarding the products at any time without prior notice.

This Owner's Manual is subject to corrections without prior notice.

No part of this Owner's Manual may be reproduced without written permission

HUSABERG MOTOR AB · SWEDEN
Endurovägen, S-695 72 SWEDEN
www.husaberg.se
force@husaberg.se

Downloaded from www.Manualslib.com manuals search engine

1 INTRODUCTION

Dear client,

We feel ourselves privileged and honoured to be the supplier of your choice of motorcycle. We know for sure that our product will give you years of fun and performance though the Husabergs are based upon decades of experience in racing and a dedication hard to find elsewere. You're bound to feel this through the inborn lively spirit of your bike.

Although mainly designed and constructed for competition purposes it is still very rider-friendly but due to the design the product needs careful and proper maintenannce. In order to get the most out of your "beast" and before any use of the motorbike; we highly recommend you to carefully read this Owner's Manual through. We also recommend you to pay your outmost attention to the following page regarding safety and precautions and always remember the fundamental base of all activities on two wheels:

- "Do not overestimate your capabilities, follow the domestic regulations and do think about your surroundings"

Although the Owner's Manual is put together and written in a way that will make it possible for an average mechanical experienced person to take care of the maintenance, we recommend you to let an authorized Husaberg dealer take care of at least the parts we've mentioned under:

NOTICE
AUTHORIZED PERSONNEL ONLY

Also, part of the maintenance has to be performed by an authorized dealer in order to fulfill the terms of warranty.

If you follow the advice regarding the set-up and of course also regarding the vital maintenance of the motorcycle; the Husaberg of yours will provide a maintained level of performance (read: joy and satisfaction - the reason to your choice of brand).

The personnel of Husaberg Motor AB Sweden

ATTENTION: **Always put the motorcycle on a stable centerstand whenever removing either front or rear wheel.**

ATTENTION: **Never ride your motorcycle under the influence of alcohol, drugs, barbiturates or any other kind of medical treatments hazardous to your riding performance.**

ATTENTION: **Never ride in a too low or too high gear -**
Never let the engine run for more than one minute while stationary
It may cause severe mechanical damages

WARNING:
Do not check the coolant level while the engine is hot.

ATTENTION:
Less clearances than the required cause severe engine damages

ATTENTION:
Service more frequently when riding under hard conditions

ATTENTION:
Do not use a highpressure jet-cleaning equipment on surfaces around bearings and other fragile components.

Downloaded from www.Manualslib.com manuals search engine

SAFETY

PROTECTION:
Always protect yourself with adequat clothing and protective apparel.
Always wear a helmet, goggles and boots.

MOTORCYCLE:
The motorcycle may become dangerous to ride if it is modified or if any other parts than original Husaberg parts are used. The use of other parts than original makes the warranty no longer valid.
Always keep your motorcycle in a safe state and in the best of conditions.
Regular cleaning and maintenance are extremely vital in order to avoid any mechanical damages hazardous to you and/or your surroundings.

TRANSPORTATION:
Always transport your bike upright in order to avoid any leakages of oil and/or fuel. Such fluids may increase the risk of fire. Always make sure that the bike is properly fastened in a safe and firm position during transportation.

RIDING:
Always check the motorcycle for any deterioration/damages and any necessary adjustments before you start the motorcycle (see "Pre-ride inspection").

Though the Husaberg motorcycle has a very high level of performance; always ride with care and do not overestimate your capabilities. Get to know your Husaberg motorcycle really well before you try to get the most out of it.

Never lend your motorcycle to any other rider unless you are sure that he/she is fully capable of handling it.

Always obey all local and federal regulations and laws valid within the territory.

Never ride in terrain unfamiliar to you unless inspected and guaranteed by the local authorities.

PRE-RIDE INSPECTION:
Make it a habit to give your motorcycle an inspection before and after every ride.

Always check all bolts and nuts and tighten if necessary - All for your own safety.

A clean and well lubricated bike makes for a safer ride as well as a higher value of the machine. The Pre-ride Inspection Checklist on the next page is to be regarded as a brief summary of the main important items to be controlled and, if necessary; to be adjusted or replaced.

ATTENTION: Never ride your motorcycle under the influence of alcohol, drugs, barbiturates or any other kind of medical treatments hazardous to your riding performance.

Downloaded from www.Manualslib.com manuals search engine

PRE-RIDE INSPECTION CHECK LIST

Engine oil	Check the level and fill up if necessary. Check for any leakages in the casing.
Ignition	Check the sparkplug cap/HV lead for damages.
Radiator	Check the coolant level and fill up if necessary. Check for leakages and/or damages of the cells and hoses and attachments**.**
Airfilter	Clean, or if necessary, replace the filter
Carburettor	Check the function of the throttle/cable and adjust/replace any damaged parts if necessary. Adjust the idling- and/or mixture screw if necessary.
Clutch	Check the function and for any leakages.
Decompression	Check the function of the manual and the semi-automatic decompression lever and adjust if necessary (non-electrical starter models only).
Chain	Check and adjust/replace the chain if necessary. Check the sprockets and replace if necessary.
Suspension	Check the operation of the front fork and the shock absorber and adjust if necessary. Check and tighten the swingarm if necessary.
Wheels	Check the air pressure of the tyres and fill up if necessary. Check the spokes and tighten if necessary.
Brakes	Check the level of brakefluid and fill up if necessary. Check for any leakages and the function of the brakes. Adjust levers and/or replace hoses/pads if necessary.
Fuel	Check the level and fill up if necessary. Check for any leakages in the fuel lines.
Steering	Check the clearance of the steering head bearings and adjust if necessary.
Controls	Check the function of the speedometer or odometer (if incl.in equipment).
Lighting	Check the functions of the front-, tail-, and brake lights (and any occuring turn signals).

Downloaded from www.Manualslib.com manuals search engine

SPECIFICATIONS

SUBJECT/MODEL	ENDURO	MOTOCROSS	ELDURO	DESERT (FX)
Engine type	Liquid cooled, 4-stroke single cylinder, SOHC-4 valves			
Displacements	400-models: 399cc / Bore 92,0 mm x Stroke 60,1 mm 501-models: 501cc / Bore 95,0 mm x Stroke 70,7 mm 600-models: 595cc / Bore 95,0 mm x Stroke 84,0 mm			
Compression ratio	400-models: 12,0:1 501-models: 11,8:1 600-models: 11,6:1			
Start system	Kick starter		Electrical- and kick starter	
Decompression system	One automatic system activated by the camshaft, one activated by the kick starter and one operated by a manual lever		Fully automatic system activated by the camshaft plus one operated by a manual lever	
Decomp. cable clearance	2 mm ± 1 mm		2 mm ± 1 mm	
Valve clearance	Intake and Exhaust: 0,10 mm			
Lubrication	Orbit oilpump and reedvalve controlled lubrication Oil-cooled piston and connecting rod Replaceable micro filter and washable oil screen			
Engine oil	1,0 Litre Synthetic SAE 5W-50 API SG/CF (minimum SAE 15W-50)			
Ignition	SEM, CDI, DFC™; Dynamic Force Control			
Spark plug / gap	NGK DCPR8E / 0,7 mm			
Coolant	1,3 litre of 50% Anti-freeze, with corrosion inhibitor, and 50% water			
Alternator	12 V / 70 + 70 W	Not available	12 V / 70 + 70 W	12 V / 70 + 70 W
Clutch	Hydraulic, 7 friction- and 8 mating plates in oil bath			
Clutch hydraulic oil	Mineral oil SAE 2-7W			
Gearbox	6-speed WR	4 or (6)-speed CR	6-speed WR	6-speed S-WR
Ratios 1st gear	*13/34 - 2,615	15/32 - 2,133	13/34 - 2,615	15/32 - 2,133
2nd gear	*17/30 - 1,765	18/28 - 1,555	17/30 - 1,765	18/28 - 1,555
3rd gear	*20/27 - 1,350	20/25 - 1,250	20/27 - 1,350	20/25 - 1,250
4th gear	*23/24 - 1,043	23/24 - 1,043	23/24 - 1,043	23/24 - 1,043
5th gear	25/22 - 0,880	(24/22 - 0,917)	25/22 - 0,880	25/22 - 0,880
6th gear	27/20 - 0,741	(25/21 - 0,840)	27/20 - 0,741	27/20 - 0,741
	*FC 4-speed WR			
Primary transmission	Spur gears			
Ratio	29/78 - 2,690			
Secondary transmission	520 O-ring chain			
Ratios 501/4-speed		15/42 - 2,800		
600/4-speed		15/42 - 2,800		
400/6-speed	13/48 - 3,692		13/48 - 3,692	13/48 - 3,692
501/6-speed	15/48 - 3,200	(15/48 - 3,200)	15/48 - 3,200	15/48 - 3,200
600/6-speed	15/48 - 3,200	(15/42 - 2,800)	15/48 - 3,200	15/48 - 3,200
Carburettor (std. jetting see page 8)	400-models: Dellorto PHM 38 501- & 600-models: Dellorto PHM 40 Dual Sport USA - FS 600: Edelbrock Qwiksilver 38			
Air filtration	All models except FR 600 E: Single foam filter FR 600 E: Double foam filters			
Fuel	RON 98 (octane), unleaded			
Fuel capacity	All models except FR 600 E: 9 litres FR 600 E: 25 litres			
Exhaust system	Inox steel pipes, 2 into 1 collector, Aluminium/Inox silencer (FC Titanium/Inox) US-versions except FC models equipped with spark arrester			

Downloaded from www.Manualslib.com manuals search engine

SPECIFICATIONS

SUBJECT/MODEL	ENDURO	ELDURO	MOTOCROSS	DESERT (FX)
Frame	Heat-treated (DIN) 25CrMo4 steel			
Caster	28,5°			
Front suspension	Hydraulic front fork ø 43 mm / 280 mm WP MXMA 4358 HUSABERG-E		Hydraulic front fork ø 43 mm / 280 mm WP MXMA 4358 HUSABERG-MX	
Rear suspension	Progressive Damping System - PDS WP 5018 HUSABERG-E 320 mm		Progressive Damping System - PDS WP 5018 HUSABERG-MX 320 mm	
Front brake	BREMBO, hydraulic, twin piston (Super Motard four piston) floating caliper ø 260 mm (Super Motard ø 320 mm) stainless steel brake disc			
Rear brake	BREMBO, hydraulic, single piston floating caliper ø 220 mm stainless steel brake disc			
Front rim/tyre	EXCEL 1.60x21”/90/90-21”			
Front rim/tyre Super M.	BEHR 3.50X17”/120/70-17”			Not applicable
Rear rim/tyre	EXCEL 2.15x18”/130/80-18”		2.15x19”/130/70-19”	2.15x18”/130/80-18”
Rear rim/tyre Super M.	BEHR 4.25x17”/160/60-17”			Not applicable
Tyre pressure (cold) Front	Offroad use: 0,8 bar (12,0 psi) / Street Use: 1,0 bar (14,5 psi)			
Front Super M.	2,2 bar (31,9 psi)			Not applicable
Rear	Offroad use: 0,8 bar (12,0 psi) / Street Use: 1,0 bar (14,5 psi)			
Rear Super M.	2,0 bar (29,0 psi)			Not applicable
Headlight	12 V 65/50 W - P43t		Not applicable	
Headlight US-models	12 V 45/40 W - BA20d			
Tail- / Stop light	12 V 21/5 W - BAY15d			
Parking light	12 V 4 W - BA9s			
Turn signal light	12 V 10 W - BA15s			
Speedometer light	12 V 2 W - BA7s			
Battery	Not applicable	12 V 8 Ah	Not applicable	12 V 8 Ah
Main fuse		15 A		15 A
Wheelbase	1490 mm			
Wheelbase Super M.	1490 mm			
Seat height	930 mm			
Seatheight Super M.	900 mm			
Ground clearance	380 mm			
Ground clearance Super M.	350 mm			
Overall width	810 mm			
Overall width Super M.	810 mm			
Overall length	2200 mm			
Overall length Super M.	2150 mm			
Weight (dry) kg: 400/6-speed	104,8	112,4		
501/4-speed			102,0	
501/6-speed	105,2	112,5	102,4	112,0
600/4-speed			102,4	
600/6-speed	105,7	112,9	102,9	112,4
Super Motard + 2,5 kg				FR 600 E: 118,9
Front fork oil	WP SAE 5			
Front fork oil capacity	According to WP Manual			
Brake fluid	DOT 4			
Lubrication of bearings	Molybdenum sulphide grease			
Wear limit brake pads	1,5 mm			
Wear limit clutch discs	19,6 mm			
Drive chain	D.I.D. O-ring			
Wear limit drive chain	272 mm - 18 chain reels (tensioned, center distance between reels)			

Downloaded from www.Manualslib.com manuals search engine

CARBURETTOR STD. JETTINGS

MODEL/SUBJECT		Main jet	Needle jet	Needle	Needle clip pos.	Pilot jet	Throttle	Float valve	Start jet	Mixture screw
(Exploded view number)		# 6	# 4	# 3	# 26	# 7	# 2	# 9	# 8	# 33
ENDURO	FE 400	190	DR 270	K 35	#3	35	40	300	45	2 turns
	FE 501	190	DR 270	K 51	#3	33	40	300	45	1½ turns
	FE 600	195	DR 270	K 35	#3	48	50	300	45	1½ turns
ENDURO ECE	FE 400	110	DR 266	K 51	#2	48	70	300	45	1¼ turns
	FE 501	110	DR 264	K 35	#4	33	70	300	45	1 turn
	FE 600	110	DR 268	K 51	#3	42	70	300	45	1½ turns
ENDURO USA	FE 400	190	DR 270	K 35	#3	35	40	300	45	2 turns
	FE 501	190	DR 270	K 35	#3	33	40	300	45	1½ turns
	FE 600	195	DR 270	K 51	#3	33	40	300	45	1½ turns
ELDURO	FE 400 E	190	DR 270	K 35	#3	35	40	300	45	2 turns
	FE 501 E	190	DR 270	K 51	#3	33	40	300	45	1½ turns
	FE 600 E	195	DR 272	K 51	#3	48	50	300	45	1½ turns
ELDURO ECE	FE 400 E	110	DR 266	K 51	#2	48	70	300	45	1¼ turns
	FE 501 E	110	DR 264	K 35	#4	33	70	300	45	1 turn
	FE 600 E	110	DR 268	K 51	#3	42	70	300	45	1½ turns
ELDURO USA	FE 400 E	190	DR 270	K 35	#3	35	40	300	45	2 turns
	FE 501 E	190	DR 270	K 35	#3	33	40	300	45	1½ turns
	FE 600 E	195	DR 270	K 51	#3	33	40	300	45	1½ turns
MOTOCROSS	FC 501	190	DR 270	K 35	#3	33	40	300	45	1½ turns
	FC 600	195	DR 272	K 51	#3	33	40	300	45	1½ turns
DESERT USA	FX 501 E	190	DR 270	K 35	#3	33	40	300	45	1½ turns
	FX 600 E	195	DR 270	K 51	#3	33	40	300	45	1½ turns
RALLYE	FR 600 E	195	DR 272	K 51	#3	48	50	300	45	1½ turns
RALLYE USA	FR 600 E	195	DR 270	K 51	#3	33	40	300	45	1½ turns
DUAL SPORT	FS 600 E	-	-	K 6	19 out	-	-	-	-	-

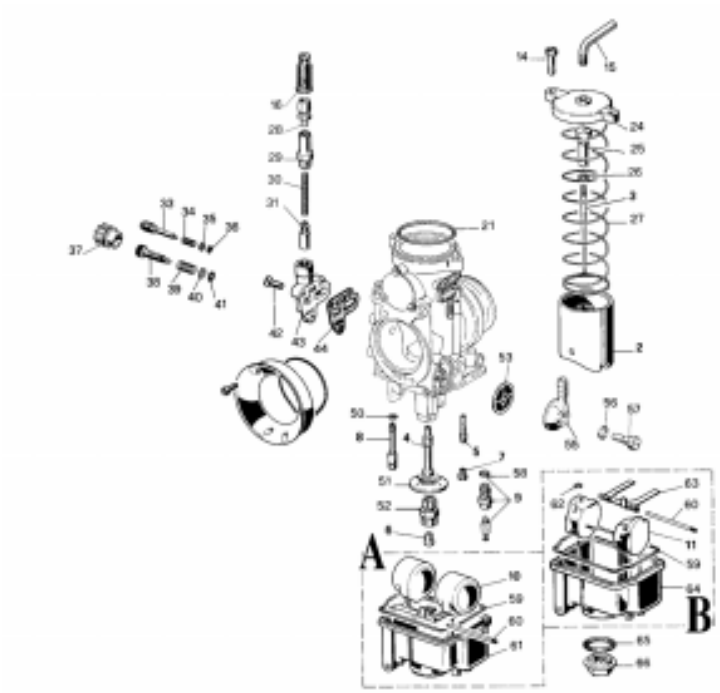

1. Flywheel puller - Article No. 270028-01

2. Flywheel holder - Article No. 270030-01

Tool kit - Article No. 390029-01

Downloaded from www.Manualslib.com manuals search engine

3 GENERAL INFORMATION

TORQUE VALUES

SUBJECT	TORQUE	NOTE
Intake manifold screws	5 Nm	
Oil filter cover screws	5 Nm	
Reed valve screws	5 Nm	Apply a threadlock liquid
Valve inspection cover screws	5 Nm	
Waterpump cover screws	5 Nm	
Stator screws	8 Nm	
Crankcase screws	10 Nm	
Cylinder head (M6) screws	10 Nm	
Exhaust pipe screws	10 Nm	
Gearshift lever screw	10 Nm	
Kick start lever screw	10 Nm	Apply a threadlock liquid
Transmission cover screws	10 Nm	
Valve cover screws	10 Nm	
Oil drain plug	12 Nm	
Spark plug	12 Nm	
Valve adjustment lock nuts	12 Nm	
Front fork triple clamp screws (M8)	15 Nm	
Upper timing sprocket screws	25 Nm	Apply a threadlock liquid
Cylinderstud nuts	44 Nm	
Flywheel nut	50 Nm	Left-hand thread
Primary gear wheel nut	80 Nm	
Swingarm shaft nuts	125 Nm	

Standard torque values	M4	M5	M6	M8	M10	M12	M16
	6 Nm	8 Nm	10 Nm	25 Nm	40 Nm	40 Nm	125 Nm

3

4 MAINTENANCE SCHEDULE

Chassis - Motocross and Desert models

SUBJECT / HOURS	5	10	15	20	25	30	35	40	45	50	55	60	65	70	75	80	85	90	95	100
Front fork oil *		R		R		R		R		R		R		R		R		R		R
Brake fluid *		R		R		R		R		R		R		R		R		R		R
Swingarm bearings/bushings					I					I					I					I
Shockabsorber bushings		I		I		I		I		I		I		I		I		I		I
Steering head bearings					I					I					I					I
Wheel bearings		I		I		I		I		I		I		I		I		I		I

Chassis - Enduro and Elduro models

SUBJECT / HOURS	10	20	30	40	50	60	70	80	90	100	110	120	130	140	150	160	170	180	190	200
Front fork oil *		R		R		R		R		R		R		R		R		R		R
Brake fluid *		R		R		R		R		R		R		R		R		R		R
Swingarm bearings/bushings					I					I					I					I
Shockabsorber bushings		I		I		I		I		I		I		I		I		I		I
Steering head bearings					I					I					I					I
Wheel bearings		I		I		I		I		I		I		I		I		I		I

C: Clean - I: Inspect - R: Replace - *Maximum 12 months interval

Downloaded from www.Manualslib.com manuals search engine

Engine - Motocross and Desert models

Please observe: Riding under hard conditions demands more frequent maintenance

SUBJECT / HOURS	5	10	15	20	25	30	35	40	45	50	55	60	65	70	75	80	85	90	95	100
REGULAR																				
Engine oil	R	R	R	R	R	R	R	R	R	R	R	R	R	R	R	R	R	R	R	R
Oil screen	C	C	C	C	C	C	C	C	C	C	C	C	C	C	C	C	C	C	C	C
Oil microfilter					R					R					R					R
Oil pump incl. reed valve										I/C										I/C
Coolant liquid *																				R
Spark plug (incl. cap)					I					R					I					R
Alternator/Ignition **										I										I
Valve clearance		I		I		I		I		I		I		I		I		I		I
Valves incl. guides & sealings																				I
Timing chain incl. tensioner																				I
Piston incl. rings & pin																				I
Cylinder																				I
Connecting rod																				I
Crankshaft pin																				I
Clutch mechanism incl. discs										I										I
Carburettor ***					I/C					I/C					I/C					I/C
Diaphragm fuel pump										I/C										I/C
Kickstart mechanism																				I
Gearshift mechanism																				I
EL: Freewheel mechanism																				I
BEARINGS																				
Connecting rod																				R
Crankshaft																				I
Gearbox main shaft																				I
Gearbox secondary shaft																				I
Shift drum																				I
Camshaft																				I
Clutch pressure plate																				I
Kickstart mechanism																				I
Intermediate gear wheel																				I
EL: Intermediate shaft																				I
EL: Counter balancer																				I
BUSHINGS																				
Connecting rod																				R
Rockerarms																				I
Kickstart shaft																				I
Clutch shaft																				I

C: Clean - I: Inspect - R: Replace

* Maximum 12 months interval - ** Clean whenever the engine has been washed - *** I(R): Especially needle and needle jet

Downloaded from www.Manualslib.com manuals search engine

Engine - Enduro and Elduro models

Please observe: Riding under hard conditions demands more frequent maintenance

SUBJECT / HOURS	10	20	30	40	50	60	70	80	90	100	110	120	130	140	150	160	170	180	190	200
REGULAR																				
Engine oil	R	R	R	R	R	R	R	R	R	R	R	R	R	R	R	R	R	R	R	R
Oil screen	C	C	C	C	C	C	C	C	C	C	C	C	C	C	C	C	C	C	C	C
Oil microfilter					R					R					R					R
Oil pump incl. reed valve										I/C										I/C
Coolant liquid *																				R
Spark plug (incl. cap)					I					R					I					R
Alternator/Ignition **										I										I
Valve clearance		I		I		I		I		I		I		I		I		I		I
Valves incl. guides & sealings																				I
Timing chain incl. tensioner																				I
Piston incl. rings & pin																				I
Cylinder																				I
Connecting rod																				I
Crankshaft pin																				I
Clutch mechanism incl. discs										I										I
Carburettor ***					I/C					I/C					I/C					I/C
Diaphragm fuel pump										I/C										I/C
Kickstart mechanism																				I
Gearshift mechanism																				I
EL: Freewheel mechanism																				I
BEARINGS																				
Connecting rod																				R
Crankshaft																				I
Gearbox main shaft																				I
Gearbox secondary shaft																				I
Shift drum																				I
Camshaft																				I
Clutch pressure plate																				I
Kickstart mechanism																				I
Intermediate gear wheel																				I
EL: Intermediate shaft																				I
EL: Counter balancer																				I
BUSHINGS																				
Connecting rod																				R
Rockerarms																				I
Kickstart shaft																				I
Clutch shaft																				I

C: Clean - I: Inspect - R: Replace

* Maximum 12 months interval - ** Clean whenever the engine has been washed - *** I(R): Especially needle and needle jet

Downloaded from www.Manualslib.com manuals search engine

IDENTIFACTION NUMBERS

The Vehicle Identification Number is placed on the right side of the steering head (Fig. 5A-1).
The Engine Number is placed on the right side of the engine, just below the cylinder (Fig. 5B-1).

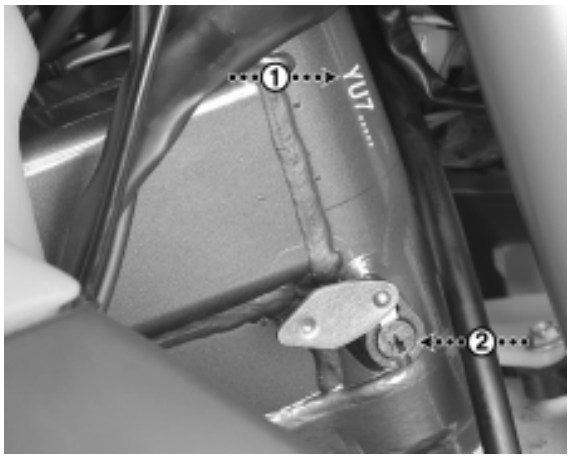

Fig. 5A

STEERING LOCK

The lock (if incl. in equipment) is placed on the right side of the steering head (Fig. 5A-2).
We recommend you to follow the conditions of your insurance regarding the use of anti-theft devices.

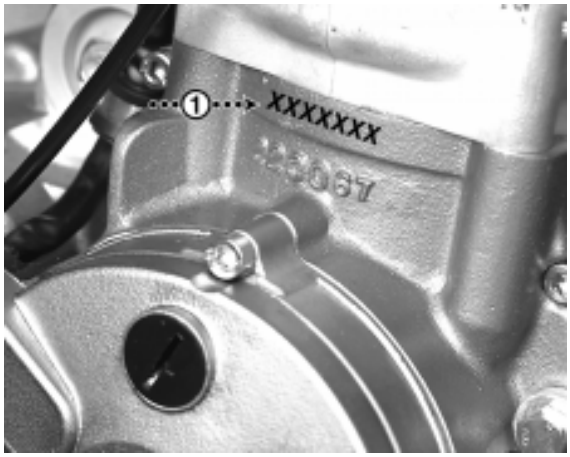

Fig. 5B

IGNITION LOCK

The ignition lock (all Elduro-models except some US-models) is either placed to the right of any speedometer (Fig. 5C-1) or in a separat bracket.
The first position, maximum counter-clockwise, means that the bike can not be started. No lights in function.
The second position, clockwise, means that the bike can be started with the kick starter but not with the electrical starter. Available lights in function.
The third position, clockwise, means that the bike can be started with both the kick starter and the electrical starter. Available lights in function.

Fig. 5C

IGNITION SWITCH

The ignition switch (only some electrical starter US-models) is placed on the right side of the battery box (Fig. 5D-1).

<u>The bottom position of the knob</u>; the bike can not be started with the electrical starter but still with the kick starter. Battery is disconnected from the system. Available lights in function if the motor is running.

<u>The outer position of the knob</u>; the battery is connected. Electrical starter in function and available lights in function.

Fig. 5D

Downloaded from www.Manualslib.com manuals search engine

Fig. 5E Combination switch Type I:
1- Headlight switch
(Parking - Off - Low - High beam)

2- Turn signal switch

3- Horn button

4- Engine shortcircuit button

5- Clutch lever adjustment

6- Clutch lever

7- Manual dekompression lever

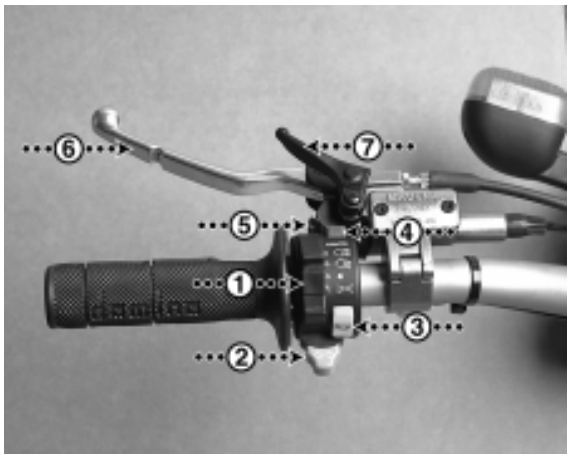

Fig. 5E

Fig. 5F Combination switch Type II:
1- Headlight switch
(Off - Low - High beam)

2- Horn button

3- Engine shortcircuit button

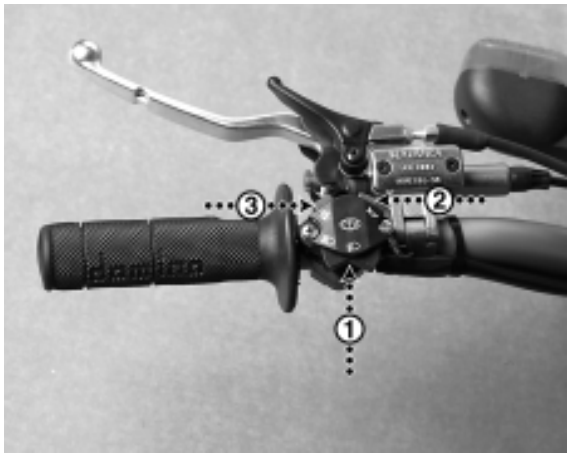

Fig. 5F

Fig. 5G 1- Engine shortcircuit button
(Motocross models)

2- 2-step ignition switch
Low - Normal conditions
High - Starts and heavy tracks

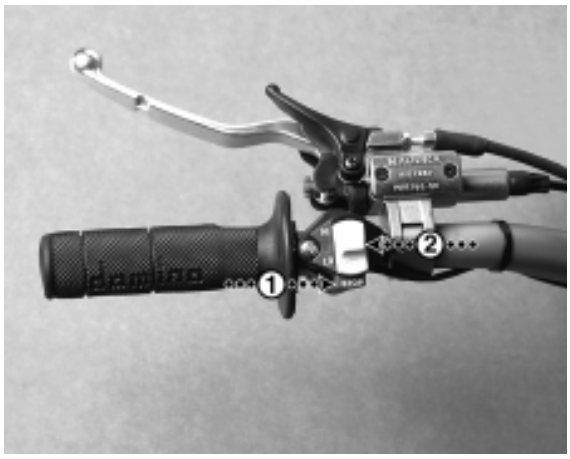

Fig. 5G

Fig. 5H 1- Light switch
(On - Off, Enduro-US models)

Fig. 5H

Downloaded from www.Manualslib.com manuals search engine

Fig 5I

1- Twistgrip
(Electrical starter models)

2- Electrical starter button

3- Engine shortcircuit switch

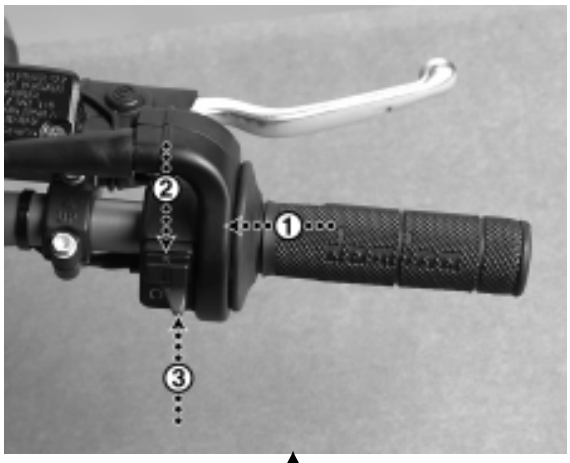

Fig. 5I

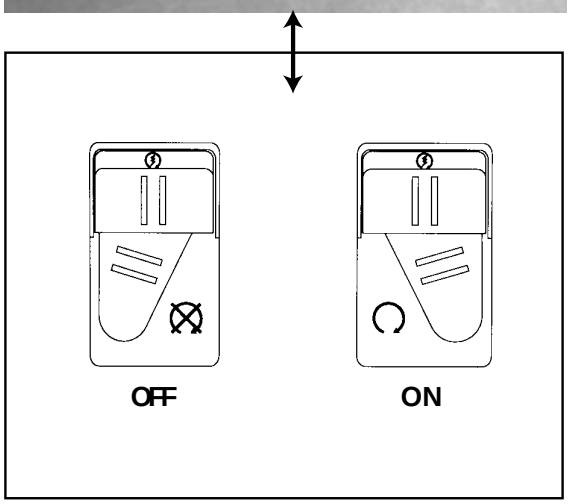

Fig. 5J

Fig. 5K

1- Twistgrip
(Non-electrical starter models)

2- Frontbrake lever

3- Frontbrake fluid reservoir

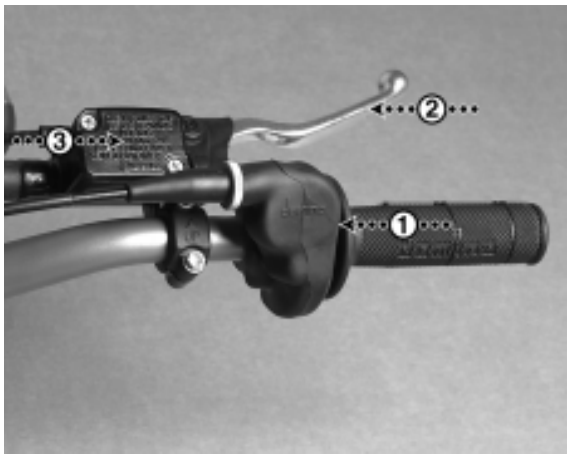

Fig. 5K

Fig. 5L

1- Speedometer
(If incl. in equipment)

2- Highbeam indicator lamp

3- Turn signal indicator lamp

4- Trip meter knob

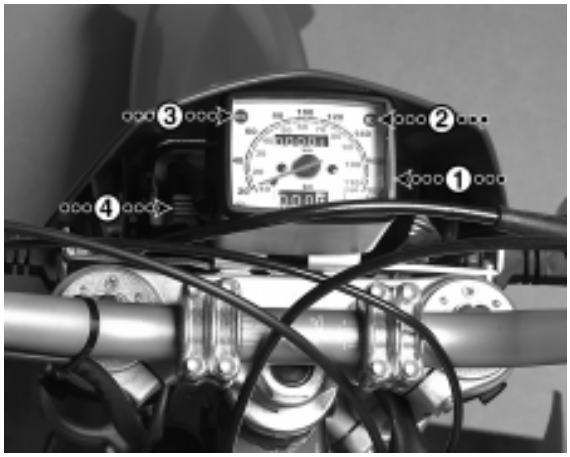

Fig. 5L

Downloaded from www.Manualslib.com manuals search engine

Kick starter models:
Follow the checklist on page 5.
Turn the fuel tap/taps (Fig. 6A-1) to position ON (Fig. 6B-1).
Cold engine: Turn the choke lever (Fig 6A-2) to position ON (Fig. 6B-2) by pulling it downwards and twisting it 90°.
Warm engine: Choke lever should be in OFF position.
Put the gearshift lever into neutral.
With the throttle fully closed, make a distinct and long kick all the way through the operational orbit of the kick start lever. If the engine does not start, let the kick start lever return all the way back in order to provide the maximum distance for the kick start lever and also activating the additional semi-automatic decompression system.
Cold engine: Warm the engine up (the throttle a little bit opened) with the choke on until it runs smoothly.
Engine idling, pull the clutch lever fully towards the handlebar and engage the 1st gear by pushing the gearshift lever downwards. Open the throttle slightly at the same time as you slowly and gently release the clutch lever.
Shift the gears as soon as adequate rpms have been achieved.

Electrical starter models:
Follow the checklist on page 5.
Turn the fuel tap/taps (Fig. 6A-1) to position ON (Fig. 6B-1).
Cold engine: Turn the choke lever (Fig 6A-2) to position ON (Fig. 6B-2) by pulling it downwards and twisting it 90°.
Warm engine: Choke lever should be in OFF position.
Put the gearshift lever into neutral.
With the throttle fully closed, push the electrical start button.
Cold engine: Warm the engine up (the throttle a little bit opened) with the choke on until it runs smoothly.
Engine idling, pull the clutch lever fully towards the handlebar and engage the 1st gear by pushing the gearshift lever downwards.
Open the throttle slightly at the same time as you slowly and gently release the clutch lever.
Shift the gears as soon as adequate rpms have been achieved.
The electrical start models are all equipped with kick starters. Follow the instructions above: "Kick starter models", if used. Note that although no additional semi-automatic decompression system is installed in an electrical starter engine the kick starter lever has to be used as described.

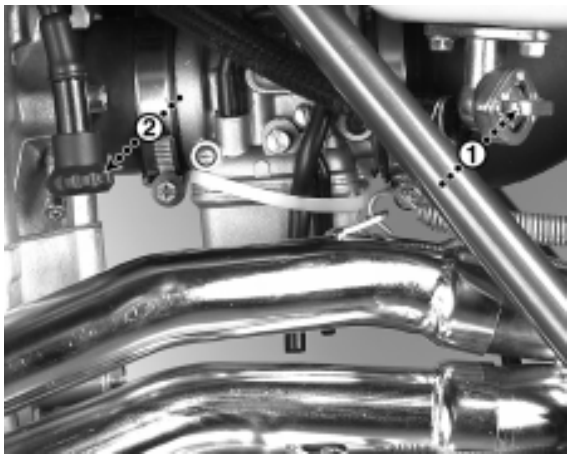

Fig. 6A

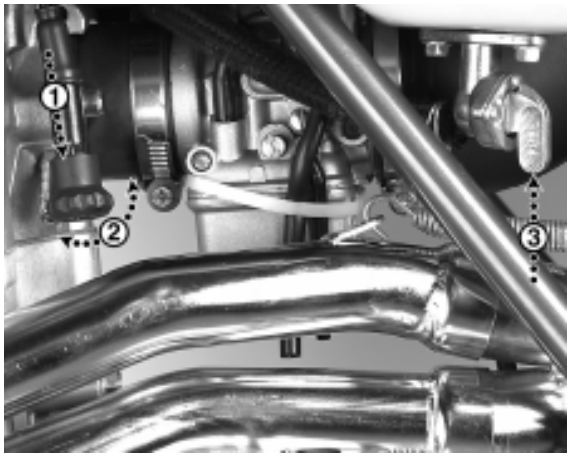

Fig. 6B

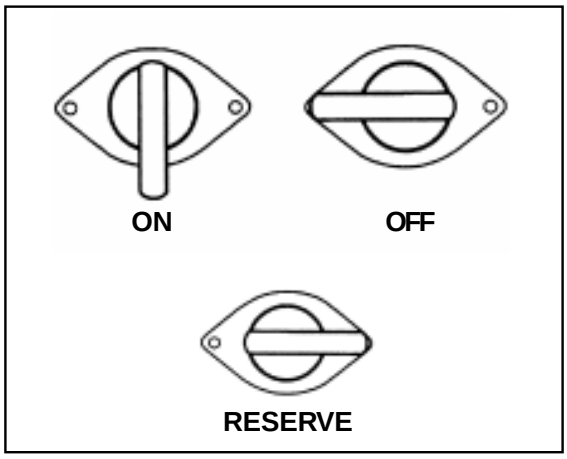

Fig. 6C

ATTENTION: **Never ride in a too low or too high gear -**
Never let the engine run for more than one minute while stationary
It may cause severe mechanical damages

Downloaded from www.Manualslib.com manuals search engine

LUBRICATION SYSTEM:
Always use a synthetic oil of a well-known brand, viscosity SAE 5W-50.
Depending on the basic design of the engine; competition purposes = equal to a small sized engine thus giving a small capacity of oil, it is vital that the oil is frequently changed.
Packed into the crate of a totally new motorcycle is an additional microfilter. The filter installed in the engine, and the engine oil, has to be changed after the first two hours of operation. The washable oil screen has to be fully cleaned at the same time.
After the first change of oil and filter, incl. cleaning of the oil screen, the intervals are maximum 5 hours (motocross and desert models) or 10 hours (all other models) regarding change of oil and cleaning of the screen and every 25/50 hours regarding exchange of the microfilter.

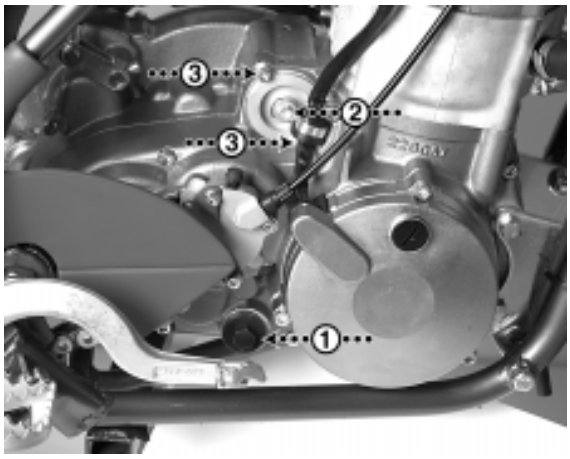

Fig. 7A

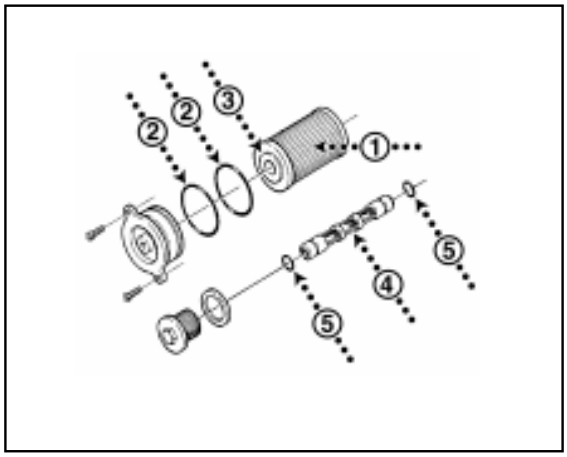

Fig. 7B

NOTICE
AUTHORIZED PERSONNEL ONLY

After every 100 hours the reed valve of the lubication system has to be inspected and cleaned.

7

Oil and filter change and cleaning of oil screen:
The oil is preferably changed while the engine is warm.

ATTENTION:
Take care - the oil could be very hot

Drain the oil by removing the oil drain plug (Fig. 7A-1, wrench No. 13) and the attached oil screen.
Remove the cover of the microfilter by removing the ignition cable clamp (Fig. 7A-2, allen key No. 5) and the two allen screws (Fig. 7A-3, allen key No. 4) and pull out the cover and filter by using one M 6 screw as a puller into the center of the cover.
Lubricate the surface of the cover's O-rings and the O-ring of the new microfilter (Fig. 7B-2, 7B-3).
Insert the microfilter in reverse order of disassembly.
Refit the oil drain plug and the attached, well cleaned, oil screen.
Refill the engine with the adequate amount of oil; 1,0 litre, through the filler hole (Fig. 7C-1). Correct level of oil as shown (Fig. 7D)
Whenever checking the oil level the motorcycle/ engine has to be in an upright position.

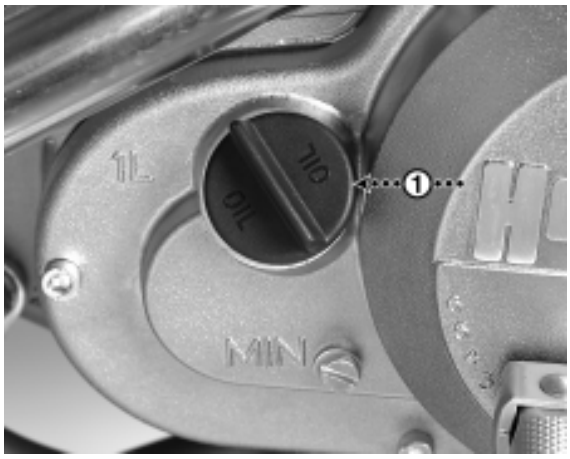

Fig. 7C

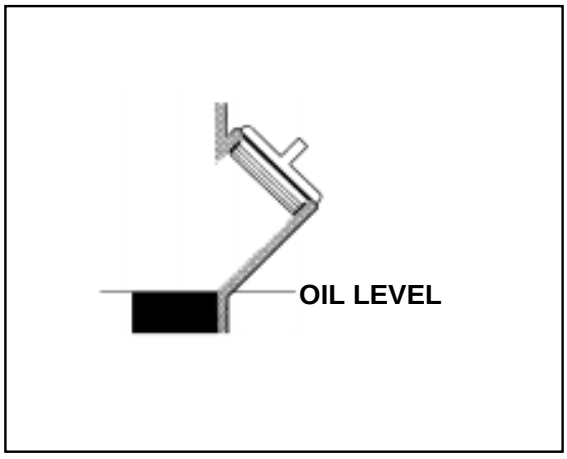

Fig. 7D

ATTENTION:
Service more frequently when riding under hard conditions

Downloaded from www.Manualslib.com manuals search engine

IGNITION:
The ignition system is a CDI-system without any contact-breaker to change or any other moving parts apart from the flywheel. However, the system has to be frequently checked and cleaned for a maximum of durability and performance.
The inside of the ignition cover, the stator, the flywheel and the surroundings are preferably cleaned after every time the motorcycle has been used and/or washed (cover removal; three allen screws, allen key No.5). Due to the heat of the engine a condensation is built up around the stator and flywheel which could cause the system to work improperly. Check the surface of the cover for any damages in order to avoid any leakages.
Frequently check the spark plug (Fig. 7E-1) for wear and the colour of the electrode coating (spark plug wrench, article No. 270007-01). The colour ought to be pale brown. A dark or black colour means that the carburettor's setting is on the rich side and a light or white colour means that it is too lean (see "FUEL & COOLING - CARBURETTOR"). Check also the

The correct electrode gap is 0,7mm.
Recommended spark plug is NGK DCPR8E.
Tightening torque 12 Nm.

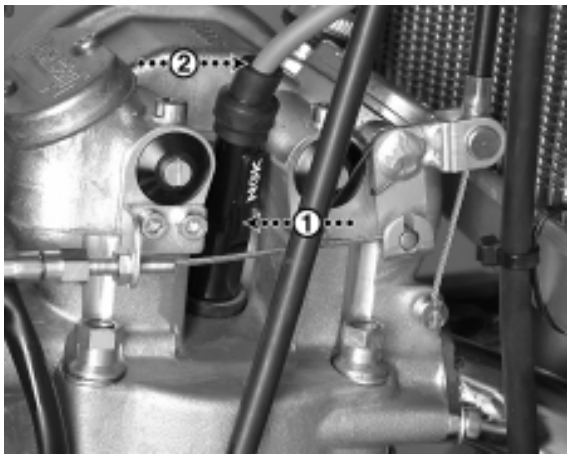

Fig. 7E

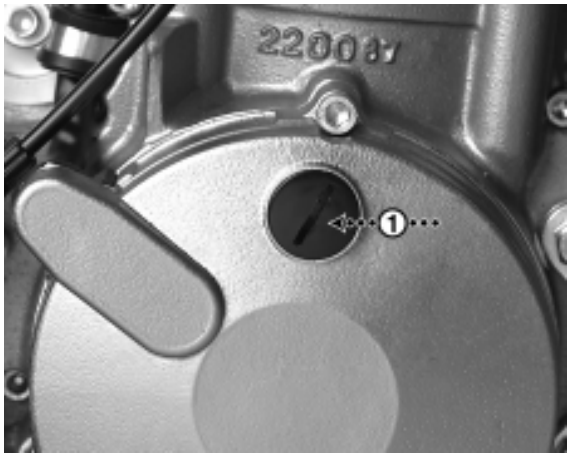

Fig. 7F

Ignition timing:

Remove the inspection cover (Fig. 7F-1).
Put the engine in TDC position (see "ENGINE - VALVE ADJUSTMENT").

The ignition is propely set if:

400cc- & 501cc- kickstarter models - the left mark on the flywheel (Fig. 7G/H-2) is aligned with the mark on the stator (Fig. 7G-1).

600cc- and electrical starter models - the right mark on the flywheel (Fig. 7G/H-3) is aligned with the mark on the stator (Fig. 7G-1).

If the ignition needs to be adjusted, remove the cover, slightly undo the three screws of the stator (Fig. 7H-1) and adjust the stator.
Tighten the screws.

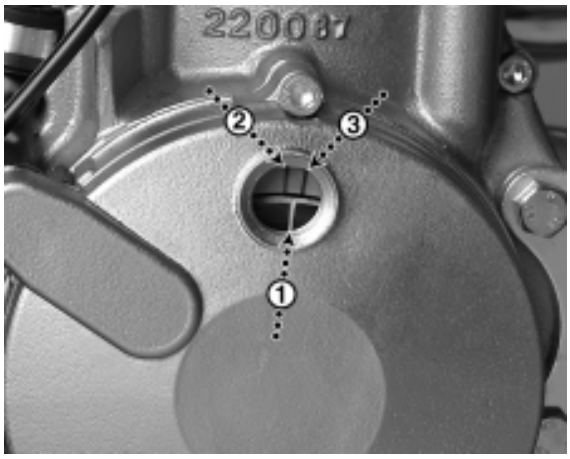

Fig. 7G

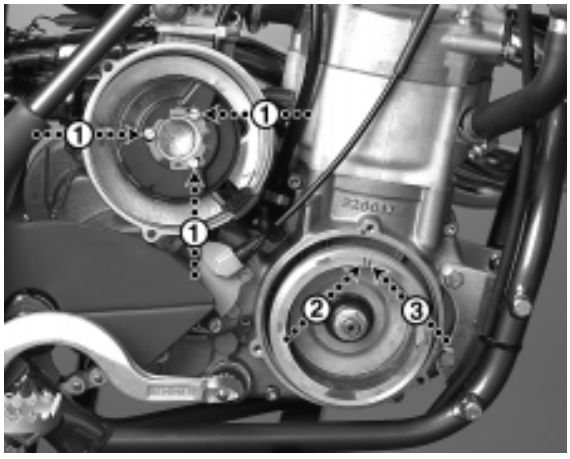

Fig. 7H

Downloaded from www.Manualslib.com manuals search engine

AIRFILTER:
To avoid any engine damages or lack of power the air filter has to be frequently cleaned or replaced.
Always use a well-known brand of filter oil after cleaning. Use an airfilter cleaning solvent of a well-known brand.
Always check the surface of the filter attachment and the filter basket for any damages.
Always check the surfaces behind the filter for any loose particles and carefully clean the surfaces.

Fig. 7I

Airfilter removal:
Remove the seat (Fig. 7I-1, one quick release screw on top of the seat).
Remove the wing nut (Fig. 7J-1) holding the airfilter and airfilter basket (Fig. 7J-2).
Pull the airfilter basket out of the airfilter.
Wash the filter carefully.
Soak the filter in filter oil and squeeze it slightly for any superfluous oil.
Put the airfilter basket into the filter.
Assembly in reverse order of disassembly.

ATTENTION:
Service more frequently when riding under hard conditions

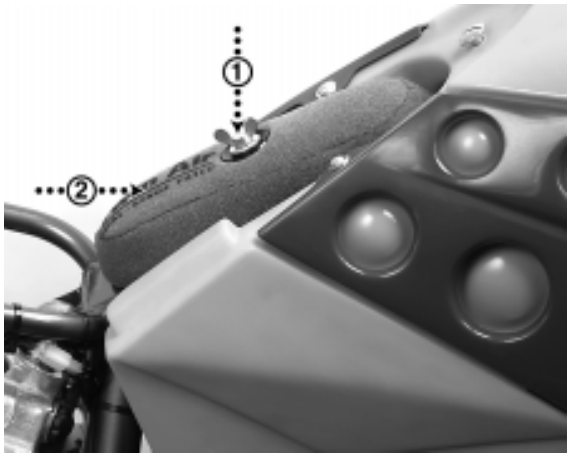

Fig. 7J

Downloaded from www.Manualslib.com manuals search engine

VALVES:
The clearances between the valve adjustment screws and the valve stems have to be checked after 2 hours of operation when the engine is brand new or any parts of the valves, valve seats or rockerarms have been changed.
The interval between the checks of the clearences is afterwards every 10 hours (Motocross and Desert models) or 20 hours (all other models).

NOTICE
AUTHORIZED PERSONNEL ONLY

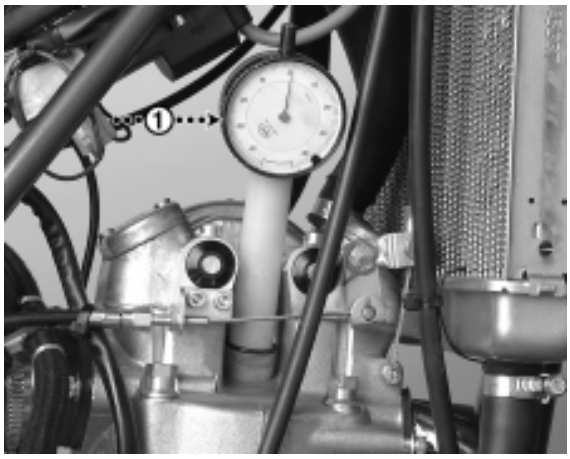

Fig. 7K

Valve adjustment:
Remove the fuel tank (see "FUEL & COOLING - FUEL").
Put the engine in TDC position on compression stroke:
Remove the ignition cover, install a dial indicator into the spark plug hole (Fig. 7K-1) and turn the flywheel (wrench No. 17), clockwise, in order to find the upper position of the piston.

Remove the two valve inspection covers (Fig. 7L-1, 2, allen key No. 4) including the gaskets. Check the clearances of the valves; 0.10 mm on both the intake valves as well as the exhaust valves. Adjust if necessary by releasing the lock nut (Fig. 7M-1, wrench No. 10) and then by adjusting the screw (Fig. 7M-2) into the adequate clearance.
Refit in the reverse order of disassembly.
Replace the gaskets of the inspection covers if necessary.

ATTENTION:
Service more frequently when riding under hard conditions

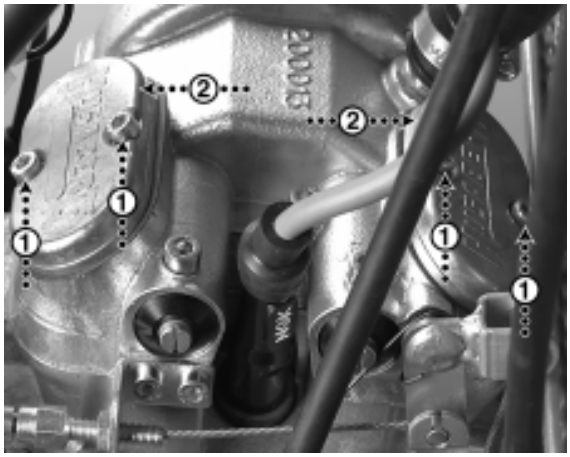

Fig. 7L

Fig. 7M

7

Downloaded from www.Manualslib.com manuals search engine

CARBURETTOR:
Always make sure that the throttle (Fig. 8A-1) returns to a fully closed position.
Always make sure that the twistgrip and cable move easily.
Always keep the twistgrip and cable well cleaned and lubricated. The tube on top of the carburettor (Fig. 8A-2) is a point of deterioration to the cable and thus a vital part of the cable to be inspected.
Always make sure of a 1-2 mm clearance in the twistgrip. Adjustment is done by removing the dust protection (Fig. 8B-1), releasing the lock nut (Fig. 8B-2) and adjusting the adjustment screw (Fig. 8B-3).

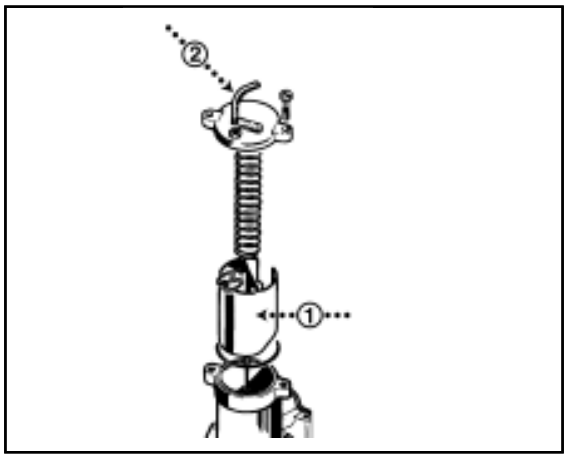

Fig. 8A

Always check the intake manifold (Fig. 8C-6) and the airfilter tube (Fig. 8C-5) for any cracks and/or leakages and replace if necessary.
Always keep the shaft of the choke lever (Fig. 8C-3) well lubricated.
Always check that the overflow tubes (Fig. 8C-4) on each side of the carburettor are positioned in a vertical position straight from the outlets and not crossed nor hanging over the carburettor.
Always ensure that an appropriate fuel is used (minimum 98 octane) in order to get the most out of the motorcycle and to ensure a proper function of the engine.

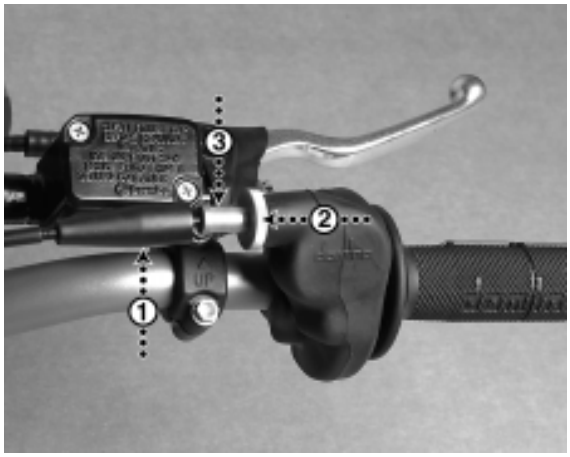

Fig. 8B

Carburettor setting:
To ensure an easy start of the engine, a high level of performance and a reduction of any risk of engine damages, the carburettor has to be correctly set and adjusted.
The carburettor has an idling screw (Fig. 8C-1) and a mixture screw (Fig. 8C-2) that have to be properly adjusted. In order to carry out a proper adjustment of these, the engine has to be warm.
With the twistgrip fully closed, turn the idling screw to a position that makes the engine run smoothly at idling speed (approximately 1600-1800 rpm).
Adjust the mixture screw to a position of a maximum idling speed.
If the engine now runs in a too high idling speed unscrew the idling screw until a satisfying idling speed is established.
A guideline regarding the mixture screw is 1½-2½ turns from the bottom position of the screw.
Depending on the altitude and the humidity, the adjustment may have to be changed whenever riding under various conditions.

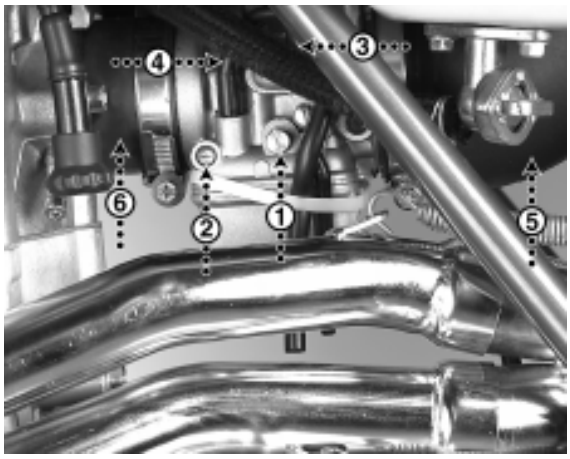

Fig. 8C

ATTENTION:
Service more frequently when riding under hard conditions

8

Downloaded from www.Manualslib.com manuals search engine

FUEL:
The Husaberg motorcycle is developed and designed for competition use and this makes a high compression ratio a necessity.
In order to avoid any damages caused by too low grade of octane we highly recommend you to use a fuel of minimum 98 octane.

Fuel tank:
Remove the seat (Fig. 8D-1, see ”ENGINE - AIRFILTER”).
Remove the the two clamps holding the upper fuel lines attached to each fuel tap (Fig. 8D-3).
Remove the two hexagon bolts holding the left and right radiator spoiler attached to the radiator (Fig. 8D-2, wrench No.8).
Remove the fuel tank by lifting it up in the rear end and moving it up and backwards.

Fig. 8D

RADIATOR:
Always make sure that the coolant level is correct by checking that the coolant is visible after removal of the radiator filler cap (Fig. 8E-1).

WARNING:
Do not check the coolant level while the engine is hot.

A mixture of 50% water and 50 % anti-freeze with a corrosion inhibitor is recommended.
Check all connections and hoses for any leakages. Check the radiator cells for any leakages.

Fig. 8E

8

Downloaded from www.Manualslib.com manuals search engine

CLUTCH:
Check the hydraulic line for any leakages or deterioration.
Always check the level of fluid in the reservoir. The cover of the reservoir has to be removed in order to check the level (Fig. 9A-1).
Adjust the pressure point of the lever according to your own preferences with the adjustment knob (Fig. 9A-2). Always keep a clearance in between the lever and the point of pressure.

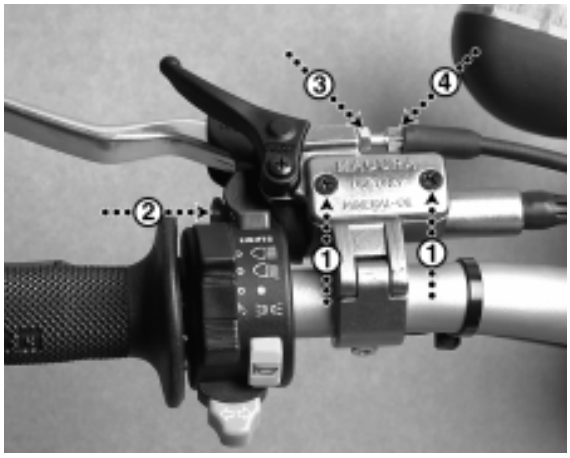

Fig. 9A

NOTICE
AUTHORIZED PERSONNEL ONLY

If the package of discs measures less than 19,6mm the discs are to be replaced.

Air bleeding of clutch:
Undo the screws of the cover (Fig. 9A-1) just slightly in order for the oil to flow over. Set the adjustment knob (Fig. 9A-2) in its outer position and keep the lever fully open during the whole operation. Put a rag or likewise around the oil reservoir.
Open the air nipple (Fig. 9B-1) 1-1½ turn. Slip or screw a suitable syringe (article no. 270032-01), fully filled with mineral oil, onto the nipple and inject the oil into the system. Make sure that no air gets through the syringe into the system. Inject the whole contents of the syringe in one operation.
Remove the syringe and close the air nipple immediately. Tighten the screws of the cover and adjust the point of pressure to your liking.

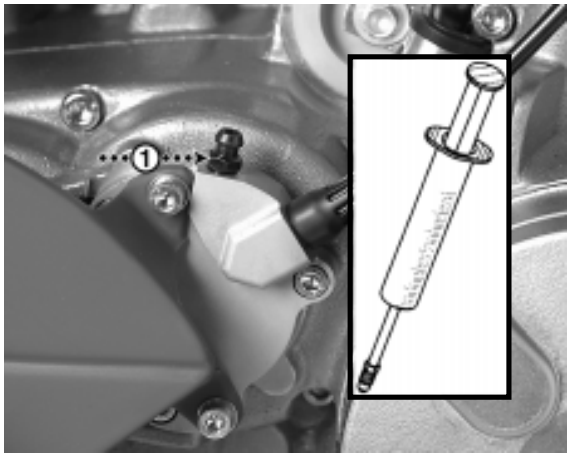

Fig. 9B

DECOMPRESSION SYSTEM:
Although the kick start models are equipped with a fully automatic decompression system, activated by the camshaft, they are also equipped with a system activated by the kick start plus a manually operated one with a lever on the handlebar. The latter also on electrical starter models as well.
Always make sure that the clearance of the lever is as shown.
Always keep the cable well lubricated and make sure that it moves easily.

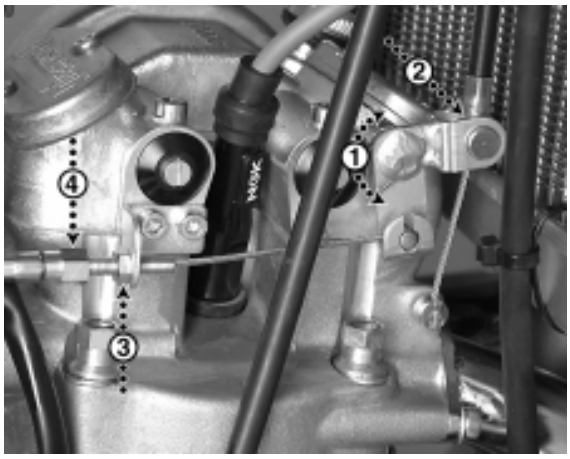

Fig. 9C

Adjustment of decompression cables:
Put the engine in TDC (see "ENGINE - VALVE ADJUSTMENT").
Make sure that the manual decompression cable has an adequat clearance before starting the adjustment of the semi-automatic adjustment.
Adjustment is done by releasing the lock nut (Fig. 9C-3, wrench No. 10) before turning the adjustment screw (Fig. 9C-4, wrench No. 10).
The adjustment of the manual lever is done by releasing the lock nut (Fig. 9A-3) before turning the adjustment screw (Fig. 9A-4).

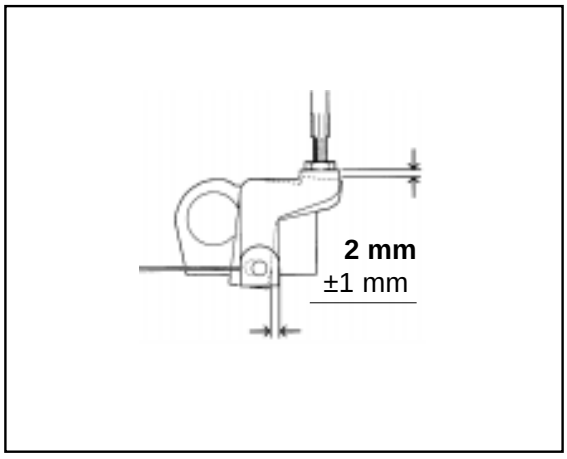

Fig. 9D

ATTENTION:
Less clearances than the required cause severe engine damages

Downloaded from www.Manualslib.com manuals search engine

FRONT WHEEL:
Always check the front wheel for any damages regarding the rim, the spokes and the nipples.
Check the bearings for any wear and/or damages.
Tighten any loose spokes (spoke wrench No.5.5).
All spokes have to be equally tensioned.

Removal of front wheel:
Remove the hexagon nut (Fig. 10A-1, wrench No 16).
Remove the four hexagon bolts (Fig. 10A-2, wrench No.10), two on each side of the front fork legs.
Remove the front wheel axle, incl. the left hand spacer (Fig. 10A-3) and the right hand spacer or speedometer gear lever (Fig. 10A-4) and remove the front wheel.
Check the wear of the brake pads at the same time.

Fig. 10A

Assembly of front wheel:
Put the front wheel in by first sliding the brake disc into the brake caliper (in between the two pads).
Put the cleaned and lubricated wheel axle in, from right to left, with the spacer (Fig. 10A-3) on the left side of the hub and the thicker part of the spacer towards the front fork. The rest in reverse order of disassembly.
Tighten the bolts. **Max. torque of the four M8 bolts (Fig. 10A-2) 15 Nm.**

ATTENTION:
Always put the motorcycle on a stable centerstand whenever removing either front or rear wheel.

REAR WHEEL:
Always check the rear wheel for any damages regarding the rim, the spokes and the nipples.
Check the bearings for any wear and/or damages.
Retighten any loose spokes (spoke wrench No.6). **All spokes have to be equally tensioned.**

Removal of rear wheel:
Remove the nut on the right side of the swingarm (Fig. 10B-1, wrench No.27).
Remove the wheel axle and the chain tensioner sledges (Fig. 10B-2) on each side and push the wheel forward.
Slip the chain off the wheel sprocket and remove the rear wheel.
Check the wear of the brake pads at the same time.

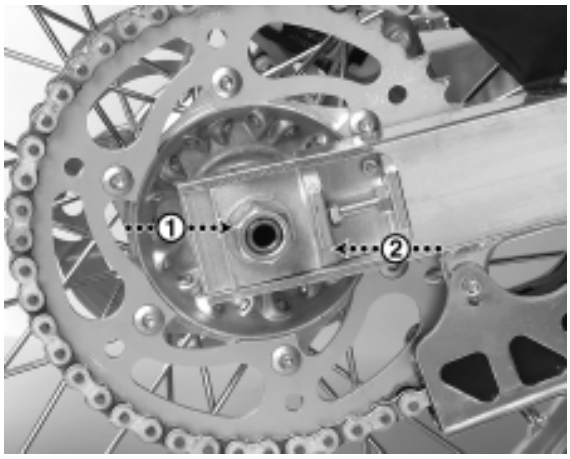

Fig. 10B

Assembly of rear wheel:
Put the rear wheel in by first sliding the brake disc into the caliper (in between the two pads).
Slip the chain onto the sprocket and put the cleaned and lubricated wheel axle in, from left to right, including the left and right chain tensioner sledges.
Adjust the chain tensioner (see "WHEELS & BRAKES - CHAIN DRIVING") if necessary.
Tighten the rear wheel shaft nut.

Downloaded from www.Manualslib.com manuals search engine

WHEEL BEARING RENEWAL:
Remove the wheel (see previous page).
Position the wheel so that the bearings (Fig. 10C2-2) are easily removed from the inside of the hub.
Remove the radial sealing (Fig. 10C-1) in order to be able to remove the circlip (Fig. 10C2-1), one circlip only but two sealings per each hub.
Push the spacing sleeve to one side (Fig. 10C-2) in order to position a suitable triblet onto the backside of the inner ring of the opposite bearing.
By crosswise (Fig. 10D-2) tapping onto the bearing (Fig. 10D-1), knock the bearing out of the hub.
Follow the same procedure regarding the opposite bearing. Be careful not to damage the bearing bases in the hub.
Measure the length of the spacer sleeve which should be minimum:

front wheel with speedometer
63,3 ± 0,15 mm
front wheel without speedometer
80,3 ± 0,15 mm
rear wheel
121,6 ± 0,15 mm

Replace if necessary.
Install the new bearing on the circlip side into the hub and put on the circlip.
Turn the wheel and install the spacer sleeve towards the bearing on the circlip side and then install the next bearing towards the spacer sleeve.
The spacer sleeve should just slightly be touching the two bearings.
Make sure to position the bearings in alignment with the bearing bases in the hub and the spacer sleeve in alignment with the two bearings.
Install the sealings and assembly the wheel in the reverse order of disassembly.

Fig. 10C

Fig. 10C2

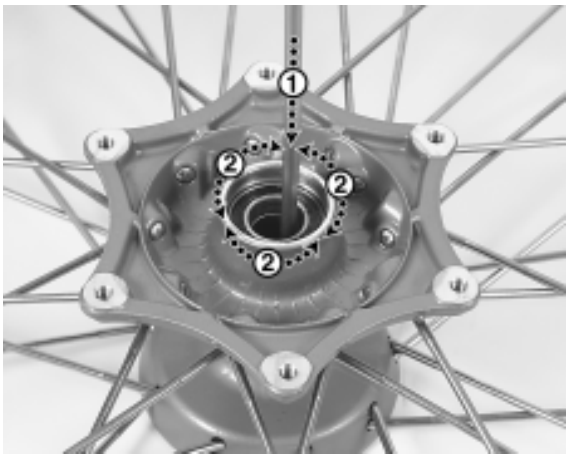

Fig. 10D

Downloaded from www.Manualslib.com manuals search engine

CHAIN:
The Husaberg motorcycle is delivered with a chain of X-ring type. If properly serviced it will last for a long period.
Always keep the chain well cleaned and lubricated and make sure that the chain is properly tensioned.
Always make sure that the chain is not showing any signs of wear that may cause it to break or causing damages to the front- and/or rear sprocket. With the chain tensioned, the maximum wear as shown (Fig. 10E).

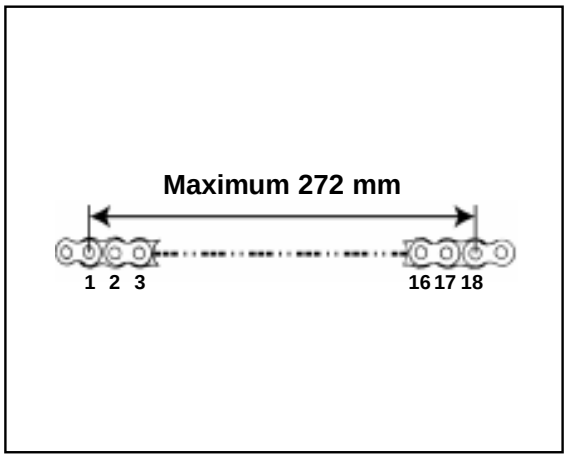

Fig. 10E

Chain lubrication:
Remove the rear wheel (see "WHEELS & BRAKES - WHEELS").
Remove the swingarm (see "SUSPENSION - SWINGARM").
After cleaning of the removed chain; use a suitable solvent, wipe it off with a clean and dry cloth.
Lubricate the chain by using a well-known brand of O-ring lubrication.
Assembly in reverse order of disassembly.

Sprockets:
Always check the front- and rear sprocket for any wear that may cause damages to the chain (Fig. 10F).
Whereafter changing to a new O-ring chain, always follow the recommendations of the supplier regarding maintenance and wear limits.

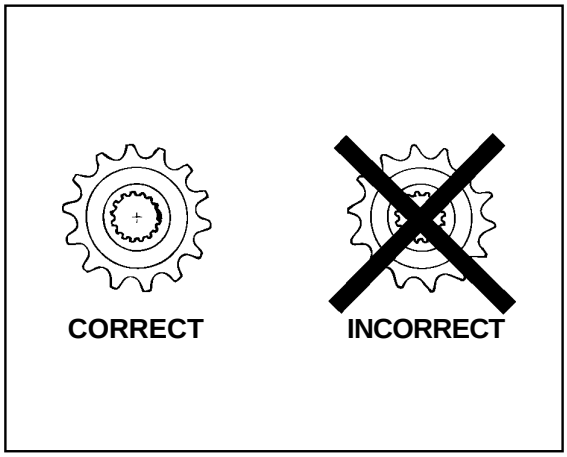

Fig. 10F

Chain tension control:
Control of the tension is done when the bike is in an upright, unloaded, position (wheels on the ground and no centerstand used).
Press the chain upwards, using just a minor force. When properly tensioned you should be able to just barely touch the swingarm protection at the position as shown (Fig. 10G-1) with the chain.

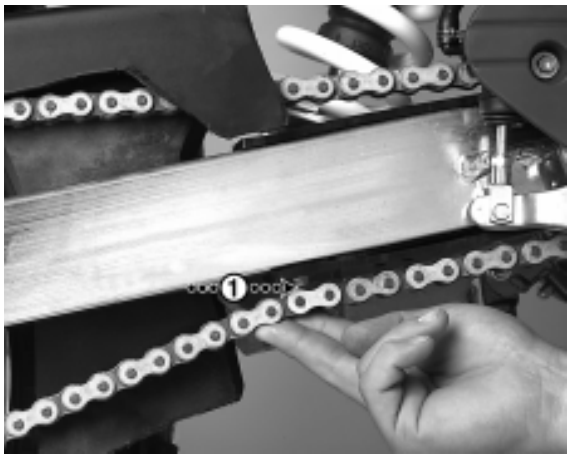

Fig. 10G

Chain tension adjustment:
Undo the rear wheel axle by slacking off the nut (Fig. 10H-1, wrench No.27).
Release the two lock nuts of the chain tensioners on each side of the swingarm (Fig. 10H-2, wrench No.13).
Adjust the chain with the chain tensioner bolts (Fig. 10H-3, wrench No.13) to a correct tension on both sides. Measure the distances in between the swingarm shaft and the rear wheel shaft on each side of the motorcycle and make sure that the distances are exactly the same.
Tighten the lock nuts of the chain tensioners.
Tighten the rear wheel axle.

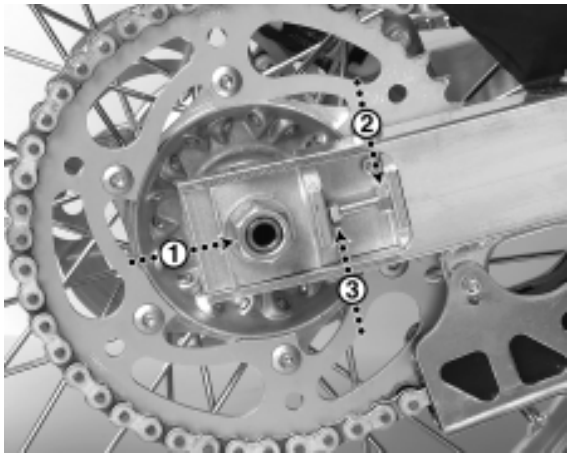

Fig. 10H

Downloaded from www.Manualslib.com manuals search engine

FRONT BRAKE:
The Husaberg motorcycle is equipped with a Brembo hydraulic disc brake. For your own safety it needs to be frequently serviced and checked.
Always check the level of brake fluid in the reservoir. The reservoir has a transparent "window" with a mark for the lowest level (Fig. 10I-1).
Always check the brake hose for any leakage and/ or deterioration.
Always check the wear of the brake pads. Change the pads if the thickness of each brake pad, excluding the metal part, is less than 1,5 mm.

Fig. 10I

Brake fluid:
Add fluid; DOT 4, by removing the two screws (Fig. 10I-2, Philips screwdriver) and removing the cover and the membrane. Take care - the fluid is toxic and could also harm the surfaces of the motorcycle.

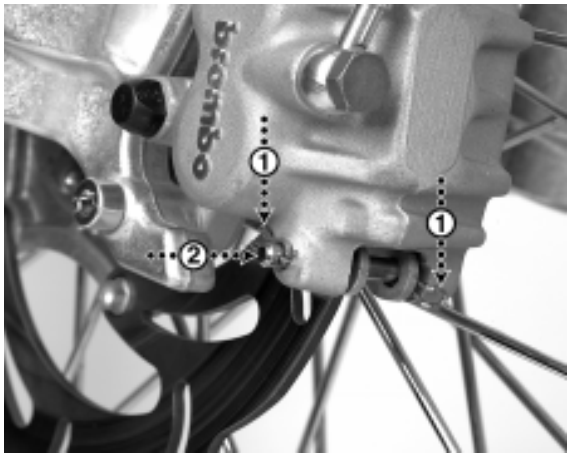

Fig. 10J

Brake pads:
Remove the two clips (Fig. 10J-1) holding the brake pad pin (Fig. 10J-2).
Remove the two brake pads by removing the pin and pulling the two pads out (Fig. 10K-1).
Fit new pads in reverse order.

Air bleeding:
Ensure that the air nipple (Fig. 10L-1, wrench No.11) is easily opened.
With the nipple in closed position; pull the lever towards the handlebar a couple of times and keep it under pressure towards the handlebar the last time.
Open the air nipple slightly and the brake lever, still under pressure, will move towards the handlebar allowing any occuring air, and fluid, to run through the brakeline and nipple.
With the brake lever fully towards the handlebar close the air nipple and then release the lever.
Repeat the above mentioned steps until no more air is visible from the air nipple. Make sure that the reservoir has enough fluid all the time (not below the MIN level).

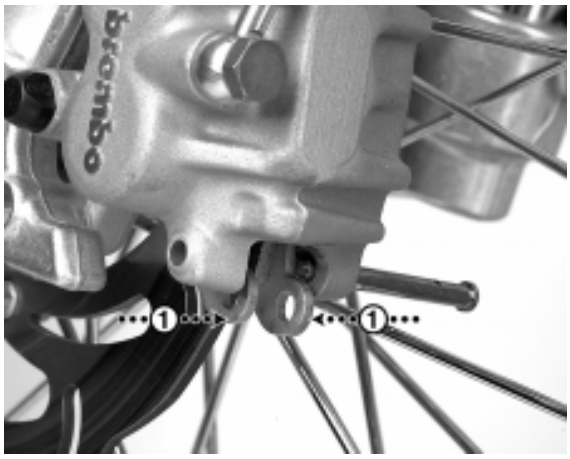

Fig. 10K

Adjustment of brake lever:
The front brake lever has an adjustment knob (Fig. 10I-3) that allows a personal adjustment of the pressure point. Always keep a clearance in between the lever and the point of pressure.

Tightening torque brake caliper/bracket (M8): 25 Nm / Use a threadlock liquid on the bolts.

ATTENTION:
Always put the motorcycle on a stable centerstand whenever removing either front or rear wheel.

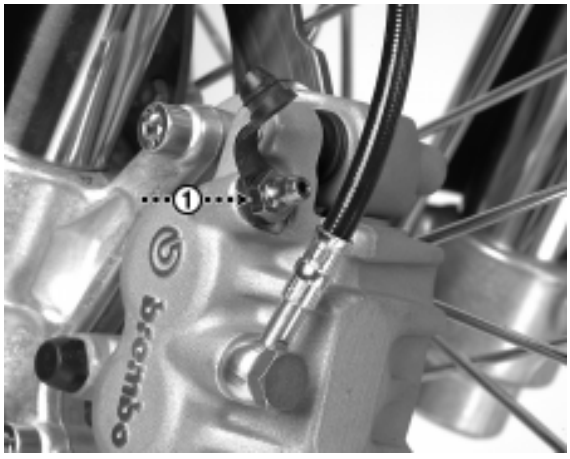

Fig. 10L

Downloaded from www.Manualslib.com manuals search engine

REAR BRAKE:
The Husaberg motorcycle is equipped with a Brembo hydraulic disc brake. For your own safety it needs to be frequently serviced and checked.
Always check the level of brake fluid in the reservoir (Fig. 10M-1). The level has to be within the MIN and MAX marks when the motorcycle is upright.
Always check the brake hoses for any leakage and/or deterioration.
Always check the wear of the brake pads. Change the pads if the total thickness of each pad is less than 1,5 mm, excluding the metal part.

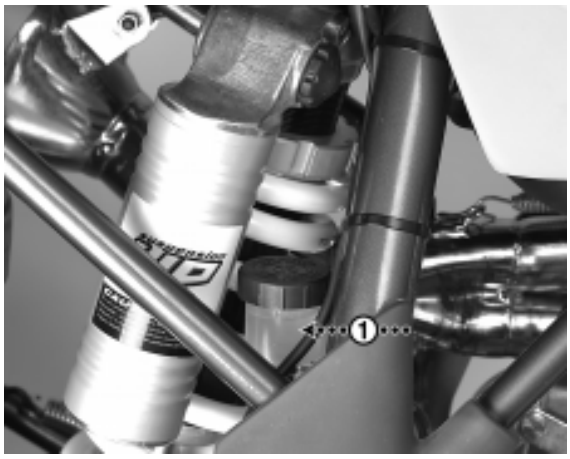

Fig. 10M

Brake fluid:
Add fluid; DOT 4, by removing the cap on the reservoir and the gasket. Take care - the fluid is toxic and could also harm the surfaces of the motorcycle.

Brake pads:
Remove the clip (Fig. 10N-1) holding the brake pad pin (Fig. 10N-2).
Remove the two brake pads by removing the pin and pulling the two pads out (Fig. 10O-1).
Fit new pads in reverse order.

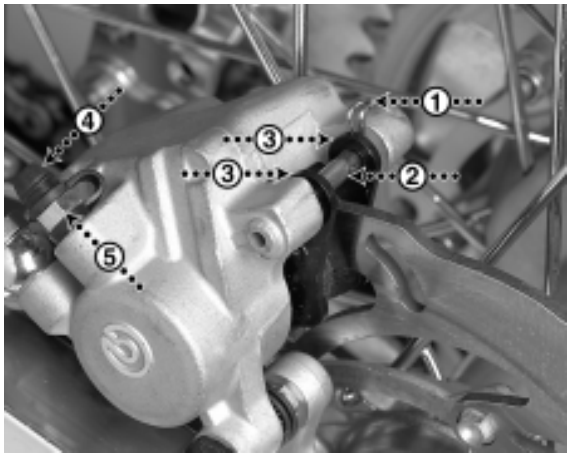

Fig. 10N

Air bleeding:
Remove the dust cap (Fig. 10N-4) and ensure that the air nipple (Fig. 10N-5, wrench No.11) is easily opened. With the nipple in closed position; push the lever downwards a couple of times and keep it under pressure the last time. Open the nipple slightly and the brake lever, still under pressure, will move downwards allowing any air, and fluid, to run through the brakeline and nipple. Before releasing the pressure onto the lever; close the air nipple.
Repeat the steps until no more air is visible. Make sure that the reservoir has enough fluid all the time.

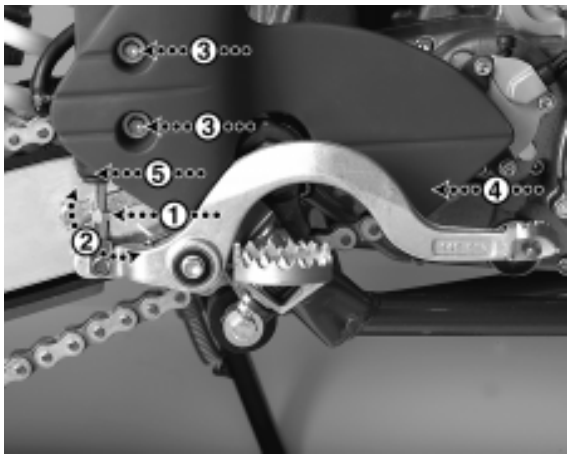

Fig. 10O

Adjustment of brake lever:
The rear brake lever is easily adjusted into a personal point of pressure and height of the lever.

Pressure point: release the lock nut (Fig. 10O-1, wrench No.10) of the pushrod (Fig. 10O-2) and turn the pushrod into selected position. Always keep a clearance in between the lever and the point of pressure. Tighten the locknut.

Height of the lever: Unscrew the two bolts (Fig. 10O-3, wrench No. 8) of the frame cover (Fig. 10O-4) and remove the cover and the brake cylinder (Fig. 10O-5).
Release the allen screw (Fig. 10P-1, allen key No. 4) and turn the eccentric adjustment (Fig. 10P-2) into selected position.
Tighten the allen screw and assembly in reverse order.

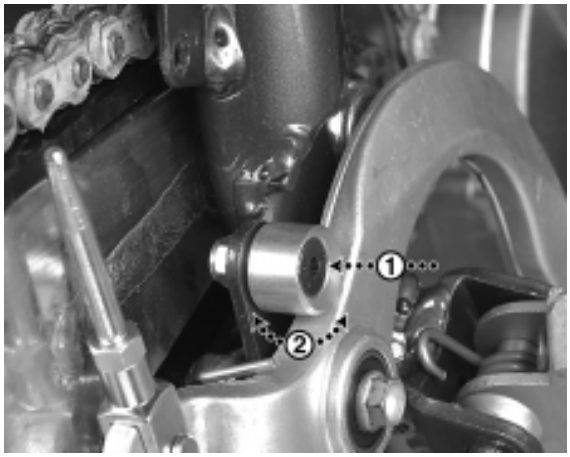

Fig. 10P

Downloaded from www.Manualslib.com manuals search engine

FRONT SUSPENSION:
The Husaberg motorcycle is delivered with an adjustable front fork from WP. For a maximum performance it needs to be adjusted according to the riding conditions and the rider's weight and preferences. The front fork is pre-adjusted from the factory as follows:

Rebound damping:
Adjustment knob (Fig. 11A-1) in 12th position (FE and FR models) or 13th position (FC and FX models) from the bottom position on both front fork legs.

Compression damping:
Adjustment screw (Fig. 11B-1) in 15th position from the bottom position on both front fork legs.

+ = more damping / - = less damping

Air bleeding of front fork:
The front fork ought to be bleeded after every time the motorcycle has been used.
The front fork unloaded; undo the air bleed screws (Fig. 11A-3) on both front fork legs until you hear the air pass.
Tighten the screws.

Static spring deflection/oil change:
Put the motorcycle on a centerstand in order to get the front wheel off the ground. Measure the distance (Fig. 11B-2).
Put the motorcycle on the ground (both wheels on the ground and unloaded).
Grab the handlebar and push the front fork firmly down a couple of times.
Measure the distance once again which now ought to be 20-35 mm less than the first time.

If the distance is outside these 20-35 mm the pre-load of the front fork has to be adjusted. The pre-load ought to be in between 5-20 mm.
Adjust the pre-load nut if necessary (Fig. 11A-2, wrench No. 24)

Oil change:
The oil needs to be changed after every 20 hours, Enduro and Elduro models, and 10 hours, Desert and Motocross, for a maximum performance and durability.
Follow the instructions of the WP Service Manual.

ATTENTION:
Service more frequently when riding under hard conditions

Fig. 11A

Fig. 11B

ATTENTION:
Always put the motorcycle on a stable centerstand whenever removing either front or rear wheel.

Downloaded from www.Manualslib.com manuals search engine

REAR SUSPENSION:
The Husaberg motorcycle is delivered with an adjustable shock absorber from WP. For a maximum performance it needs to be adjusted according to the riding conditions and the rider's weight and preferences. The shock absorber is pre-adjusted from the factory as follows:

Compression damping:
Adjustment knob (Fig. 11C-1) in the 5th position from the outer, most counterclockwise, position.

Rebound damping:
Adjustment screw (Fig. 11D-1) in 18th position from the bottom, most clockwise position.

+ = more damping / - = less damping

Static spring deflection:
Put the motorcycle on a stand in order to get the rear wheel off the ground and the shock absorber fully unloaded. Measure the distance A1 (Fig. 11E).
Put the motorcycle on the ground; both wheels on the ground and the rider, incl. apparel, helmets etc., sitting on the seat and the feet on the footrests.
Measure the distance A2 (Fig. 11E) which now ought to be 85-100 mm less than distance A1.
If the distance is outside these limits, adjust the pre-load ring (Fig. 11F-2) by slacking off the lock screw (Fig. 11F-1, allen key No. 6) and then turning the ring.
Tighten the lock screw after an appropriate preload has been achieved.
With the motorcycle still on the ground, but now totally unloaded, measure the distance A3 (Fig. 11E) which now ought to be 10-25 mm less than A1.
If the distance A3 is less than 10 mm - the spring is too soft. Try to adjust the rings until mean distances have been achieved according to A2 and A3*.
If the distance is more than 25 mm - the spring is too stiff. Try to adjust the rings as above*.

NOTICE
AUTHORIZED PERSONNEL ONLY

*If not possible - Let **Authorized Personnel** change to an appropriate spring.

Fig. 11C

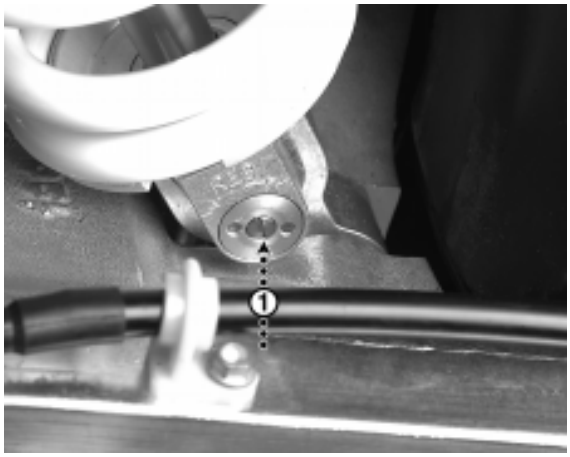

Fig. 11D

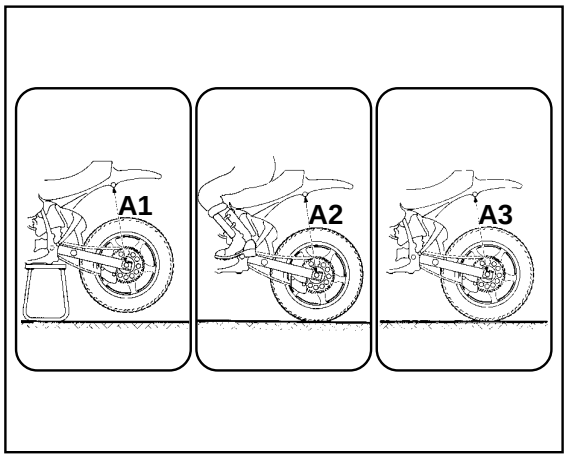

Fig. 11E

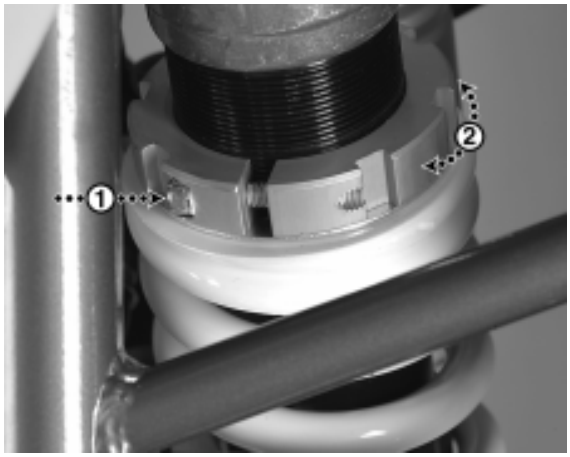

Fig. 11F

Downloaded from www.Manualslib.com manuals search engine

STEERING HEAD:
The clearance has to be checked frequently.
Put the motorcycle on a centerstand with the front wheel fully off the ground.
Turn the handlebar in both directions. It should not be either too easy nor too hard to move. Also move it front and backwards in order to check the clearance (no "clicking" sound).
To adjust, undo the four hexagon screws of the upper tripleclamp (Fig. 11G-1, wrench No.10), undo the lock nut on top of the upper tripleclamp (Fig. 11G-2, wrench No. 32) and lift off the complete tripleclamp including handlebar etc. Remove the dust protection (Fig. 11G-4) turn the adjustment nut underneath (Fig. 11G-5) until appropriate clearance is obtained. The easiest way to feel this is by turning the adjustment nut until you feel a slight resistance while moving the steering from left to right and then turning the adjustment nut ¼ of a turn back (counter-clockwise).
Assembly in reverse order.

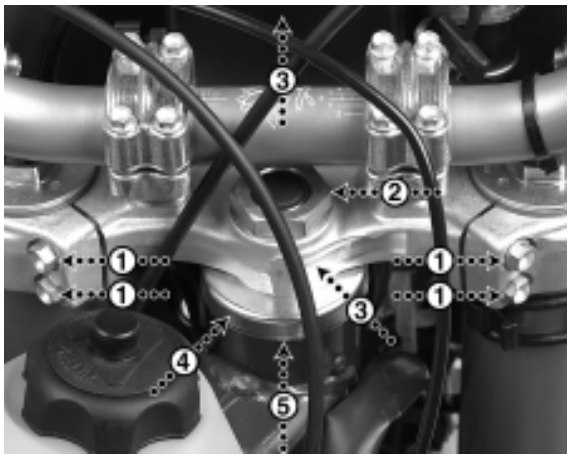

Fig. 11G

ATTENTION:
Do not use a highpressure jet-cleaning equipment on surfaces around bearings and other fragile components.

SWINGARM:
The bearings and the bushings of the swingarm have to be frequently checked and serviced. It should be dissasembled after every 50 hours in order to be checked, cleaned and lubricated.

Removal and lubrication:
Put the motorcycle on a center stand.
Remove the seat (see "ENGINE - AIR FILTER").
Remove the rear wheel (see "WHEELS & BRAKES - WHEELS").
Remove the upper bolt of the shock absorber (wrench No.17 and allen key No. 8) and lean the shock absorber backwards.
Remove the lower bolt of the shock absorber (wrench No. 17 and allen key No. 8) and remove the shock absorber.
Remove the swingarm shaft nut and shaft (Fig. 11H-1, wrench No. 21) and release the swingarm from the frame.
Check the bearings (4 pcs) and the bushings (2 pcs) in the swingarm for any damages or wear. Replace if necessary.
Clean every part thoroughly and apply a grease of a well-known brand onto the bearings, bushings and other surfaces that need to be lubricated.
Refit everything in reverse order.
Tighten all screws, bolts and nuts.

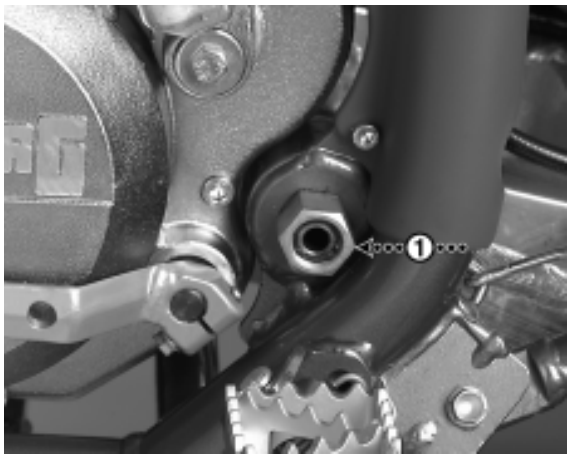

Fig. 11H

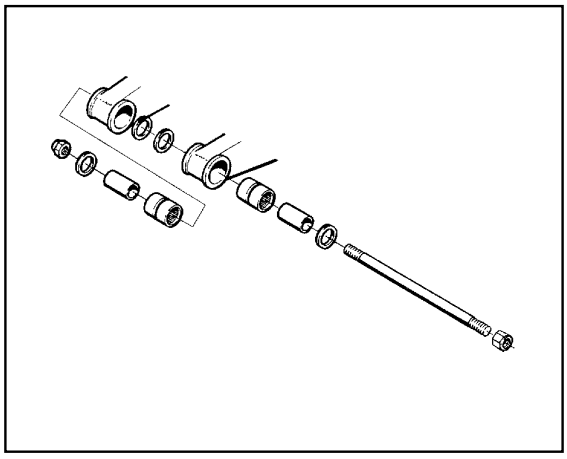
Fig. 11I

Downloaded from www.Manualslib.com manuals search engine

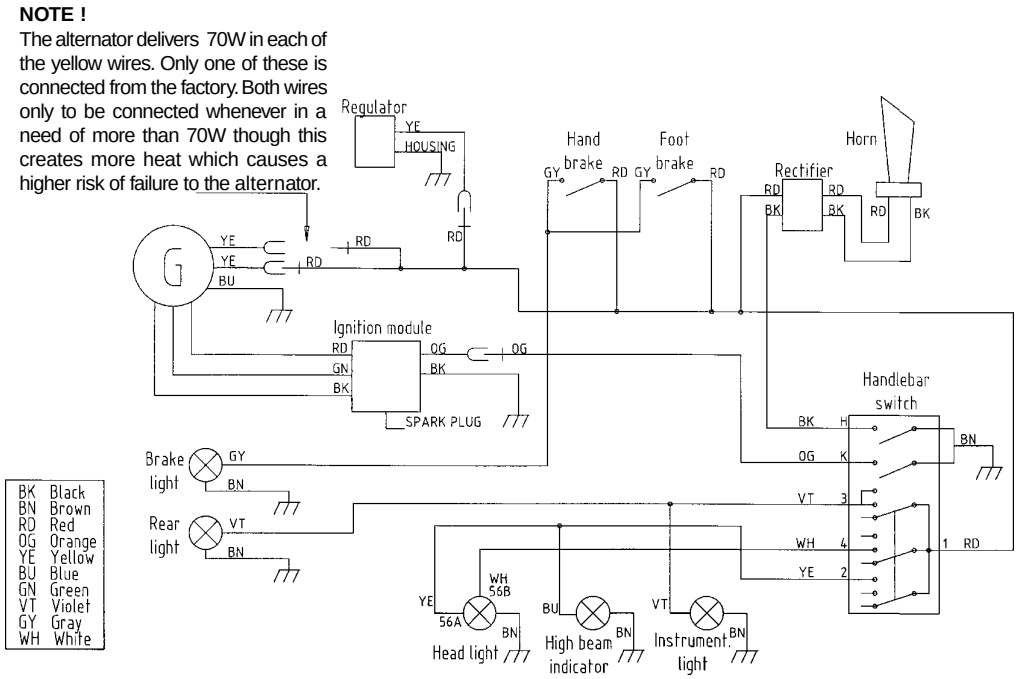

Enduro models without turn signals

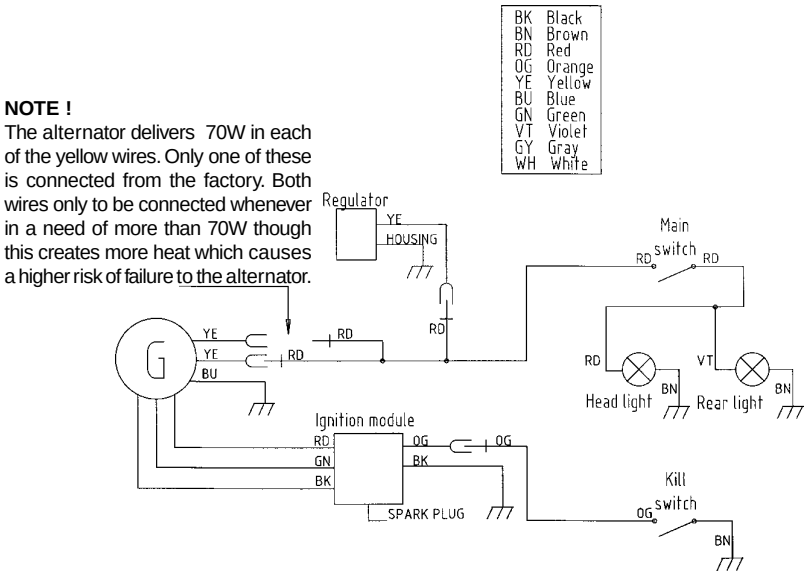

Enduro models USA

Downloaded from www.Manualslib.com manuals search engine

NOTE !
The alternator delivers 70W in each of the yellow wires. Only one of these is connected from the factory. Both wires only to be connected whenever in a need of more than 70W though this creates more heat which causes a higher risk of failure to the alternator.

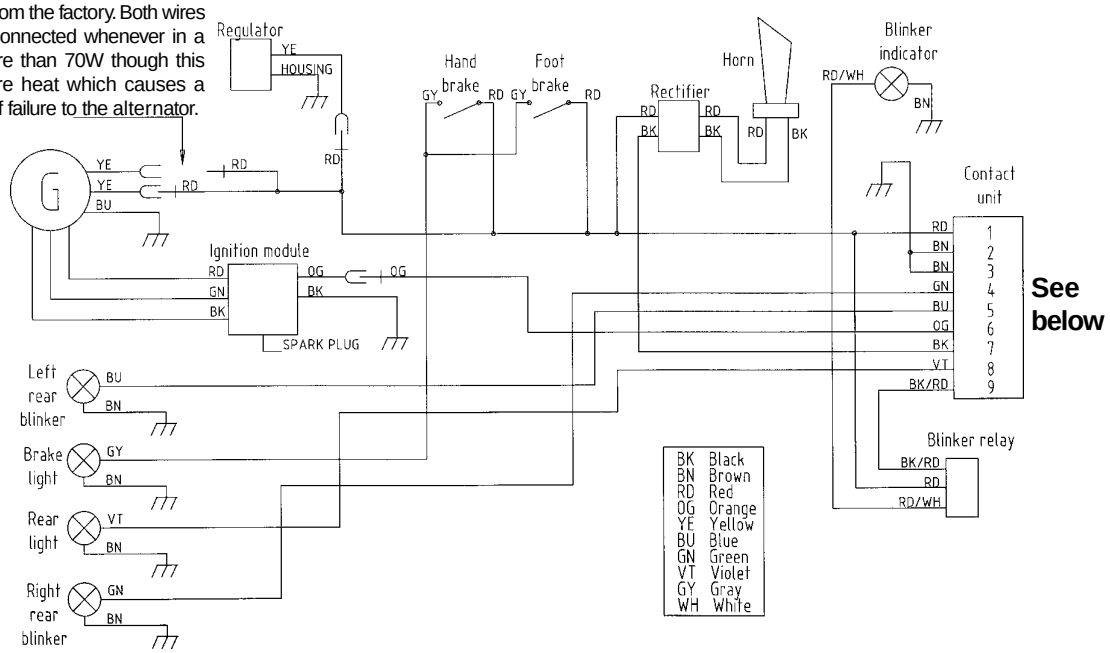

Enduro models with turn signals

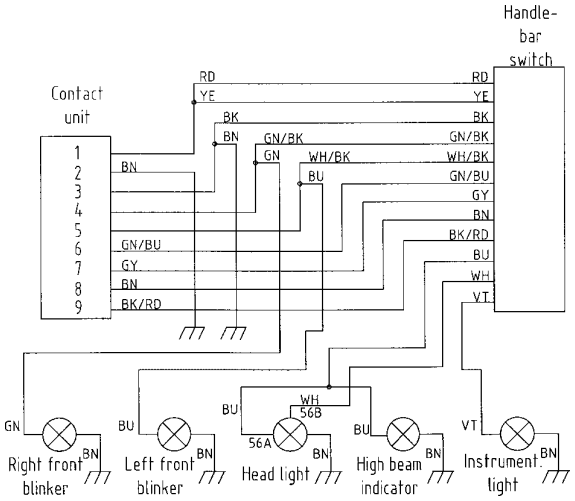

Downloaded from www.Manualslib.com manuals search engine

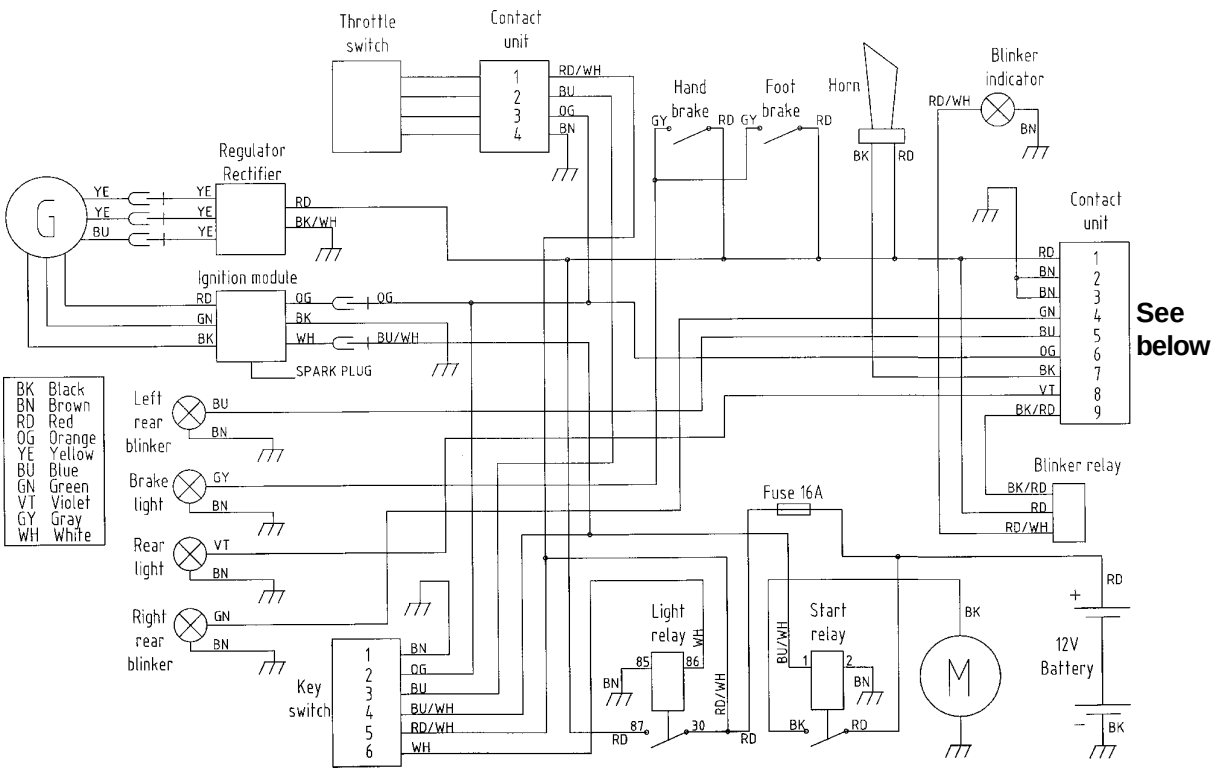

Elduro and Dual Sport models except Elduro US-models

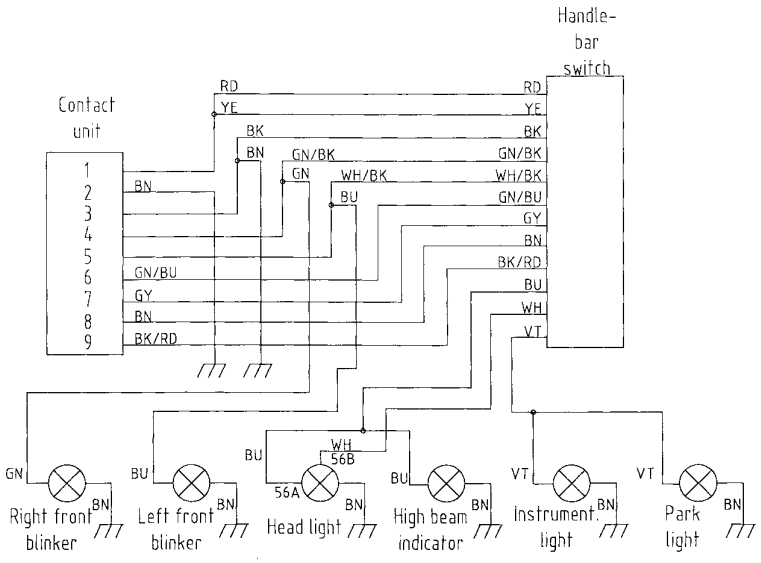

Downloaded from www.Manualslib.com manuals search engine

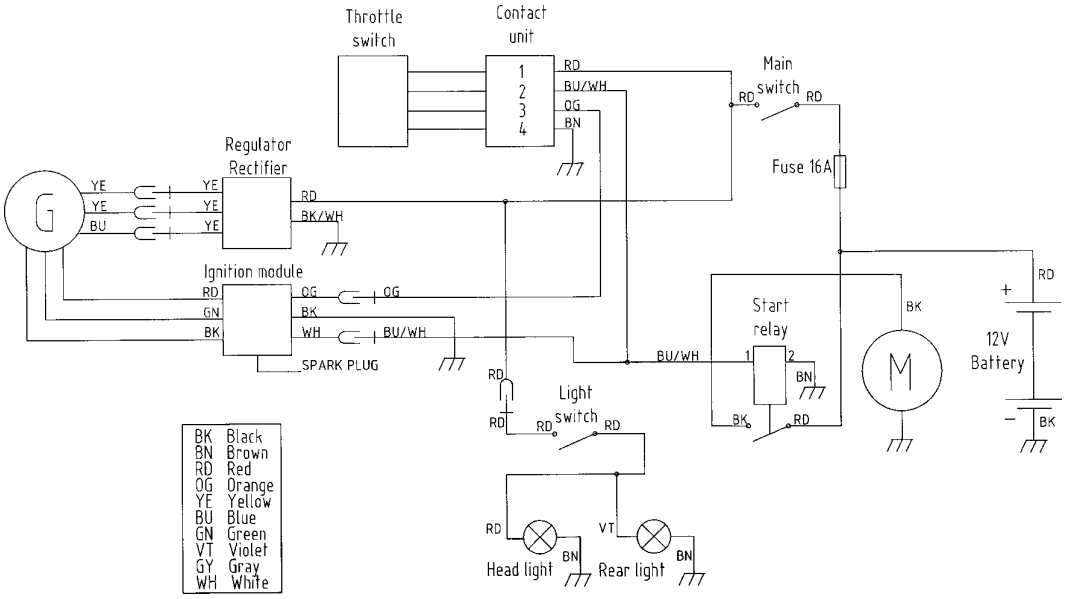

Elduro models USA

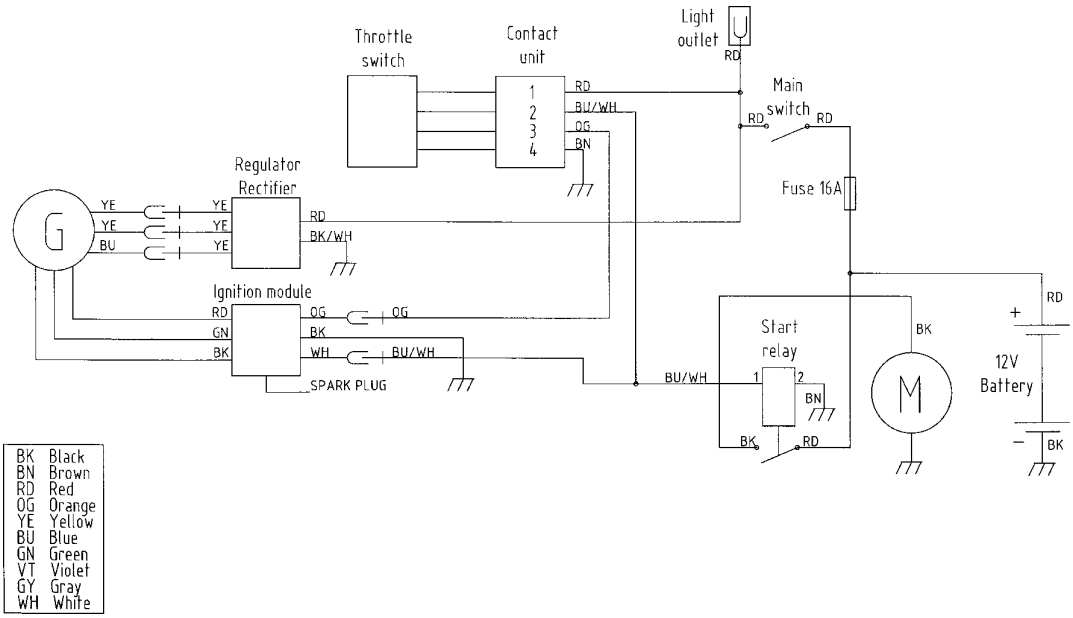

Desert models

Downloaded from www.Manualslib.com manuals search engine