Safety First

Safe Operating Rules

⚠WARNING

Motorcycles are different from other vehicles. They operate, steer, handle and brake differently. Unskilled or improper use could result in loss of control, death or serious injury. (00556c)

- Take a rider training course.
- Read Owner's Manual before riding, adding accessories or servicing.
- Wear a helmet, eye protection and protective clothing.
- Never tow a trailer.

Before operating your motorcycle it is your responsibility to read and follow the operating and maintenance instructions in this manual, and follow these basic rules for your personal safety.

- Know and respect the rules of the road. See Rules of the Road. Carefully read and familiarize yourself with the motorcycle safety information that is provided by your country or state. In the United States, read the RIDING TIPS booklet that is provided with your Owner's Manual and the MOTORCYCLE HANDBOOK which is made available by your state.
- Before starting engine, check for proper operation of brake, clutch, shifter, throttle controls, correct fuel and oil supply.

⚠WARNING

Harley-Davidson parts and accessories are designed for Harley-Davidson motorcycles. Using non-Harley-Davidson parts or accessories can adversely affect performance, stability or handling, which could result in death or serious injury. (00001b)

- Use only Harley-Davidson approved parts and accessories. Use of certain other manufacturer's performance parts will void your new motorcycle warranty. See your Harley-Davidson dealer for details.

⚠WARNING

Stop the engine when refueling or servicing the fuel system. Do not smoke or allow open flame or sparks near gasoline. Gasoline is extremely flammable and highly explosive, which could result in death or serious injury. (00002a)

When refueling your motorcycle, observe the following rules.

- Refuel in a well ventilated area with the engine turned off.
- Remove fuel filler cap slowly.
- Do not smoke or allow open flames or sparks when refueling or servicing the fuel system.
- Do not fill fuel tank above the bottom of the filler neck insert.
- Leave air space to allow for fuel expansion.

⚠WARNING

Do not store motorcycle with gasoline in tank within the

home or garage where open flames, pilot lights, sparks or electric motors are present. Gasoline is extremely flammable and highly explosive, which could result in death or serious injury. (00003a)

⚠WARNING

Engine exhaust from this product contains chemicals known to the State of California to cause cancer, and birth defects or other reproductive harm. (00004f)

⚠WARNING

Do not run motorcycle in a closed garage or confined area. Inhaling motorcycle exhaust, which contains poisonous carbon monoxide gas, could result in death or serious injury. (00005a)

⚠WARNING

The jiffy stand locks when placed in the full forward (down) position with vehicle weight on it. If the jiffy stand is not in the full forward (down) position with vehicle weight on it, the vehicle can fall over which could result in death or serious injury. (00006a)

⚠WARNING

Be sure jiffy stand is fully retracted before riding. If jiffy stand is not fully retracted, it can contact the road surface causing a loss of vehicle control, which could result in death or serious injury. (00007a)

- A new motorcycle must be operated according to the special break-in procedure. See Break-in Riding Rules.
- Operate motorcycle only at moderate speed and out of traffic until you have become thoroughly familiar with its operation and handling characteristics under all conditions.

NOTE:

We recommend that you obtain information and formal training in the correct motorcycle riding technique. In the United States, the Motorcycle Safety Foundation® offers beginning and advanced rider safety courses. Call 800-446-9227 for information.

⚠WARNING

Travel at speeds appropriate for road and conditions and never travel faster than posted speed limit. Excessive speed can cause loss of vehicle control, which could result in death or serious injury. (00008a)

- Do not exceed the legal speed limit or drive too fast for existing conditions. Always reduce speed when poor driving conditions exist. High speed increases the influence of any other condition affecting stability and increases the possibility of loss of control.
- Pay strict attention to road surfaces and wind conditions and keep both hands on the handlebar grips at all times when riding the motorcycle. Any two wheeled vehicle may be subject to upsetting forces such as wind blasts from passing trucks, holes in the pavement, rough road surfaces, rider control error, etc. These forces may influence the handling characteristics of your motorcycle. If this happens, reduce speed and guide the motorcycle with a relaxed grip to a controlled condition. Do not brake abruptly or force the handlebar.

This may aggravate an unstable condition.

- Keep cargo weight concentrated close to the motorcycle and as low as possible to minimize the change in the motorcycle's center of gravity. Distribute weight evenly on both sides of the vehicle and do not load bulky items too far behind the rider or add weight to the handlebars or front forks. Do not exceed maximum specified load in each saddlebag.

NOTE:

New riders should gain experience under various conditions while riding at moderate speeds.

- Operate your motorcycle defensively. Remember, a motorcycle does not afford the same protection as an automobile in an accident. One of the most common accident situations occurs when the driver of the other vehicle fails to see or recognize a motorcycle and turns left into the on-coming motorcyclist. Operate only with headlamp on.
- Wear an approved helmet, clothing, and foot gear suited for motorcycle riding. Bright or light colors are best for greater visibility in traffic, especially at night. Avoid loose, flowing garments and scarves.

⚠WARNING

Avoid contact with exhaust system and wear protective clothing that completely covers legs while riding. Exhaust pipes and mufflers get very hot when engine is running and remain too hot to touch, even after engine is turned off. Failure to wear protective clothing could result in burns or other serious injury. (00009a)

- When carrying passengers, it is your responsibility to instruct them on proper riding procedures. (See the RIDING TIPS booklet included in your Harley-Davidson Owner's Kit.)

- Do not allow other individuals, under any circumstances, to operate your motorcycle unless you know they are experienced, licensed riders and are thoroughly familiar with the operation of your particular motorcycle.

- Protect your motorcycle against theft. After parking your motorcycle, lock the steering head and remove the key from the motorcycle.
- Safe motorcycle operation requires alert mental judgment combined with a defensive driving attitude. Do not allow fatigue, alcohol or drugs to endanger your safety or that of others.
- Vehicles equipped with a sound system should have the volume adjusted to a non-distracting level before operating vehicle.
- Maintain your motorcycle in proper operating condition in accordance with Regular Service Intervals: 2013 Sportster Models. Proper care and maintenance, including tire pressure, condition and tread depth plus proper adjustment to steering head bearings are particularly important to the stability and safe operation of the motorcycle.

⚠WARNING

Do not operate vehicle with forks locked. Locking the forks restricts the vehicle's turning ability, which could result in death or serious injury. (00035a)

⚠WARNING

Perform the service and maintenance operations as indicated in the regular service interval table. Lack of regular maintenance at the recommended intervals can affect the safe operation of your motorcycle, which could result in death or serious injury. (00010a)

⚠WARNING

Do not operate motorcycle with loose, worn or damaged

steering or suspension systems. Contact a Harley-Davidson dealer for repairs. Loose, worn or damaged steering or suspension components can adversely affect stability and handling, which could result in death or serious injury. (00011a)

⚠WARNING

Regularly inspect shock absorbers and front forks. Replace leaking, damaged or worn parts that can adversely affect stability and handling, which could result in death or serious injury. (00012a)

⚠WARNING

Use Harley-Davidson replacement fasteners. Aftermarket fasteners can adversely affect performance, which could result in death or serious injury. (00013a)

- See your Harley-Davidson service manual for proper torque values.
- Aftermarket fasteners may not have the specific property requirements to perform properly.

⚠WARNING

Be sure tires are properly inflated, balanced, undamaged, and have adequate tread. Inspect your tires regularly and see a Harley-Davidson dealer for replacements. Riding with excessively worn, unbalanced, improperly inflated, overloaded or damaged tires can lead to tire failure and adversely affect stability and handling, which could result in death or serious injury. (00014b)

⚠WARNING

Replace punctured or damaged tires. In some cases, small punctures in the tread area may be repaired from within the removed tire by a Harley-Davidson dealer. Speed should NOT exceed 50 mph (80 km/h) for the first 24 hours after repair, and the repaired tire should NEVER be used over 80 mph (130 km/h). Failure to follow this warning could lead to tire failure and result in death or serious injury. (00015b)

⚠WARNING

Do not exceed the motorcycle's Gross Vehicle Weight Rating (GVWR) or Gross Axle Weight Rating (GAWR). Exceeding these weight ratings can lead to component failure and adversely affect stability, handling and performance, which could result in death or serious injury. (00016f)

- GVWR is the sum of the weight of the motorcycle, accessories, and the maximum weight of the rider, passenger and cargo that can be safely carried.
- The GVWR is shown on the information label, located on the frame steering head or the frame downtube.
- GAWR is the maximum amount of weight that can be safely carried on each axle.
- Refer to weight table(s). See Specifications.

⚠WARNING

Do not tow a disabled motorcycle. Towing can adversely affect stability and handling, which could result in death or serious injury. (00017a)

⚠WARNING

Do not pull a trailer with a motorcycle. Pulling a trailer can cause tire overload, damage and failure, reduced braking performance, and adversely affect stability and handling, which could result in death or serious injury. (00018c)

⚠CAUTION

Direct contact of D.O.T. 4 brake fluid with eyes can cause irritation. Avoid eye contact. In case of eye contact flush with large amounts of water and get medical attention. Swallowing large amounts of D.O.T. 4 brake fluid can cause digestive discomfort. If swallowed, obtain medical attention. Use in well ventilated area. KEEP OUT OF REACH OF CHILDREN. (00240a)

⚠WARNING

Batteries, battery posts, terminals and related accessories contain lead and lead compounds, and other chemicals known to the State of California to cause cancer, and birth defects or other reproductive harm. Wash hands after handling. (00019e)

⚠WARNING

Do not open storage compartments while riding. Distractions while riding can lead to loss of control, which could result in death or serious injury. (00082a)

⚠WARNING

Consult a Harley-Davidson dealer regarding any questions or problems that occur in the operation of your motorcycle. Failure to do so can aggravate an initial problem, cause costly repairs, cause an accident and could result in death or serious injury. (00020a)

- Be sure all equipment required by federal, state and local law is installed and in good operating condition.

Rules of the Road

- Keep to the right side of the road centerline when meeting other vehicles coming in the opposite direction. Ride to left of center of your lane to avoid oily pavement ahead.
- Always sound your horn, actuate your turn signals, and exercise caution when passing other vehicles going in the same direction. Never try to pass another vehicle going in the same direction at street intersections, on curves, or when going up or down a hill.
- At street intersections give the right-of-way to the vehicle on your right. Do not presume you have the right-of-way, as the other driver may not know it is your turn.
- Always signal when preparing to stop, turn or pass.
- All traffic signs, including those used for the control of traffic at intersections, should be obeyed promptly. SLOW DOWN signs near schools and CAUTION signs at railroad crossings should always be observed and your actions governed accordingly.

- When intending to turn to the left, signal at least 100 feet 30.5 meters before reaching the turning point. Move over to the centerline of the street (unless local rules require otherwise), slow down, enter the intersection of the street and then turn carefully to the left.
- Never anticipate a traffic light. When a change is indicated from GO to STOP in the traffic control systems at intersections, slow down and wait for the light to change. Never run through a yellow or red traffic light.
- While turning either right or left, watch for pedestrians, animals, as well as vehicles.
- Do not leave the curb or parking area without signaling. Be sure your way is clear to enter moving traffic. A moving line of traffic always has the right-of-way.
- Be sure your license plate is installed in the position specified by law and is clearly visible at all times. Keep the plate clean.
- Ride at a safe speed that is consistent with the type of highway you are on. Pay strict attention to whether the road is dry, oily, icy or wet.
- Watch for debris such as leaves or loose gravel.
- Weather and traffic conditions on the highway dictate adjusting your speed and driving habits accordingly.

Accessories and Cargo

Harley-Davidson Motor Company cannot test and make specific recommendations concerning every accessory or combination of accessories sold. Therefore, the rider must be responsible for safe operation of the motorcycle when installing accessories or carrying additional weight.

⚠WARNING

See the Accessories and Cargo section in your owner's manual. Improper cargo loading or accessory installation can cause component failure and adversely affect stability, handling and performance, which could result in death or serious injury. (00021b)

⚠WARNING

Do not exceed the motorcycle's Gross Vehicle Weight Rating (GVWR) or Gross Axle Weight Rating (GAWR). Exceeding these weight ratings can lead to component failure and adversely affect stability, handling and performance, which could result in death or serious injury. (00016f)

- GVWR is the sum of the weight of the motorcycle, accessories, and the maximum weight of the rider, passenger and cargo that can be safely carried.
- GAWR is the maximum amount of weight that can be safely carried on each axle.
- The GVWR and GAWR are shown on the information label which is located on the frame down tube in some destinations.
- Refer to weight table(s). See Specifications.

⚠WARNING

Do not pull a trailer with a motorcycle. Pulling a trailer can cause tire overload, damage and failure, reduced braking performance, and adversely affect stability and handling, which could result in death or serious injury. (00018c)

Accessories and Cargo Guidelines

The following guidelines should be used when equipping a motorcycle, carrying passengers and/or cargo.

⚠WARNING

Travel at speeds appropriate for road and conditions and never travel faster than posted speed limit. Excessive speed can cause loss of vehicle control, which could result in death or serious injury. (00008a)

- Do not exceed the legal speed limit or drive too fast for existing conditions. Always reduce speed when poor driving conditions exist. High speed increases the influence of any other condition affecting stability and increases the possibility of loss of control.
- Pay strict attention to road surfaces and wind conditions and keep both hands on the handlebar grips at all times when riding the motorcycle. Any two wheeled vehicle may be subject to upsetting forces such as wind blasts from passing trucks, holes in the pavement, rough road surfaces, rider control error, etc. These forces may influence the handling characteristics of your motorcycle. If this happens, reduce speed and guide the motorcycle with a relaxed grip to a controlled condition. Do not brake abruptly or force the handlebar. This may aggravate an unstable condition.
- Keep cargo weight concentrated close to the motorcycle and as low as possible. This minimizes the change in the motorcycle's center of gravity.
- Distribute weight evenly on both sides of the vehicle.
- Do not load bulky items too far behind the rider or add weight to the handlebars or front forks.
- Do not exceed maximum specified load in each saddlebag.
- Luggage racks are designed for lightweight items. Do not overload racks.
- Be sure cargo is secure and will not shift while riding and recheck the cargo periodically. Accessories that change the operator's riding position may increase reaction time and affect handling of the motorcycle.
- Additional electrical equipment may overload the motorcycle's electrical system possibly resulting in electrical system and/or component failure.

⚠WARNING

The front and/or rear guard(s) can provide limited leg and cosmetic vehicle protection under unique circumstances. (Fall over while stopped, very slow speed slide.) It is not made or intended to provide protection from bodily injury in a collision with another vehicle or any other object. (00022a)

- Large surfaces such as fairings, windshields, backrests, and luggage racks can have an adverse affect on stability and handling.
- Only properly installed Genuine Harley-Davidson accessories designed specifically for your motorcycle model should be used.
- Pay particular attention to the weights of accessories, cargo, riding gear, passenger and rider and how the sum total of all these weights affect the loading capacity of your motorcycle.

⚠WARNING

Harley-Davidson parts and accessories are designed for Harley-Davidson motorcycles. Using non-Harley-Davidson parts or accessories can adversely affect performance, stability or handling, which could result in death or serious injury. (00001b)

⚠WARNING

Only Touring Harley-Davidson Motorcycles are suitable for sidecar use. Consult a Harley-Davidson dealer. Use of motorcycles other than Touring models with sidecars could result in death or serious injury. (00040a)

Tampering

Owners are warned that removal or replacement of any noise control system component may be prohibited by law. This prohibition applies prior to vehicle sale or delivery to the ultimate purchaser. Use of a vehicle on which noise control system components have been removed or rendered inoperative may also be prohibited by law.

Labels

See Labels for safety and maintenance labels which were on the vehicle when new. If removed, replacement labels may be purchased for your motorcycle. Refer to Labels.

NOTE:

Some labels may be available in different languages for destinations outside the United States. See a Harley-Davidson dealer for all labels available for purchase.

Labels

LABEL*	PART NO.	DESCRIPTION	LOCATION	TEXT
1	15368-01A	Battery warning	XL Models: Left side of swingarm XR 1200X: Top of belt guard	A connected battery can cause a spark or motorcycle startup while servicing. Death or serious injury could occur. • Disconnect negative cable before servicing. • Keep cable away from terminal side while servicing.
2	29147-07	General warnings XL 883N, XL 883R, XL 1200X, XL 1200V	Top of air cleaner cover	Motorcycles are different from other vehicles. They operate, steer, handle and brake differently. Unskilled or improper use could result in loss of control, death or serious injury. • Take a rider training course. • Read Owner's Manual before riding, adding accessories or servicing. • Wear a helmet, eye protection and protective clothing. • Never tow a trailer. For a manual, find nearest dealer at 1-800-443-2153 or www.harley-davidson.com
	29127-95B	General warnings XL 883L XL 1200C, XL 1200C ANV XL 1200CP XL 1200CA, XL 1200CB	Top of air cleaner cover	
	29466-08	General warnings XR 1200X	Top of left side cover	
3	Not sold separately	Shock absorber label XR 1200X	Rear of shock absorber reservoir	Shock cannot be serviced. Attempting service can cause an explosion, which could result in death or serious injury. • Do not refill, diassemble, puncture or

				expose shock to flames. • Replacement and disposal should only be done by an authorized Harley-Davidson dealer.
4	15376-06A	Battery removal, installation	Inside left side cover	**Battery Removal** **WARNING** Sparks can cause battery explosion. Death or serious injury could occur. To avoid sparks: • Disconnect negative battery cable first. Keep cable away from all metal parts. • Do not allow red-marked positive battery cables to touch metal motorcycle parts with negative cable connected. • If vehicle is equipped with optional security siren, verify that fob is present and turn ignition key to IGNITION before removing main fuse or disconnecting battery. (See Battery Disconnection and Removal for removal procedure.)
				Battery Installation **WARNING** Sparks can cause battery explosion. Death or serious injury could occur. To avoid sparks: • Connect red-marked positive battery cables first. Do not allow re-marked positive battery cables to touch metal motorcycle parts with negative cable connected. • While connecting the re-marked positive battery cables, keep negative cable away from metal parts. (See Battery Installation and Connection for installation procedure.)
				CAUTION Failure to connect cables to the correct battery terminal couls cause damage to the motorcycle electrical system. Over-tightening battery terminal bolts could cause damage to battery terminals. Use recommended torque values.
*See Labels.				

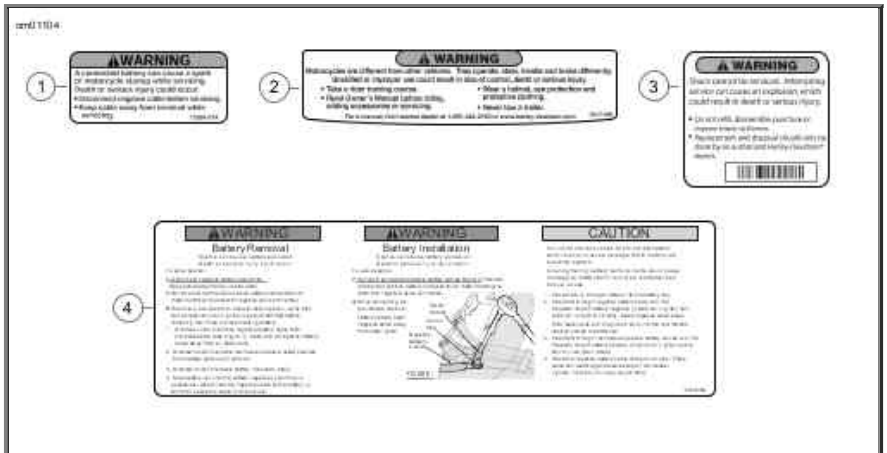

Labels

Identification

Vehicle Identification Number (VIN)

General

See Typical Harley-Davidson VIN: 2013 Sportster Models. A unique 17-digit serial or Vehicle Identification Number (VIN) is assigned to each motorcycle. Refer to Harley-Davidson VIN Breakdown: 2013 Sportster Models.

Location

See VIN Locations: Sportster Models. The full 17-digit VIN is stamped on the right side of the frame near the steering head. In some destinations, a printed VIN label is also attached to the right front downtube.

Abbreviated VIN

An abbreviated VIN showing the vehicle model, engine type, model year, and sequential number is stamped on the left side of the crankcase between the engine cylinders.

NOTE:

Always give the full 17-digit Vehicle Identification Number when ordering parts or making any inquiry about your motorcycle.

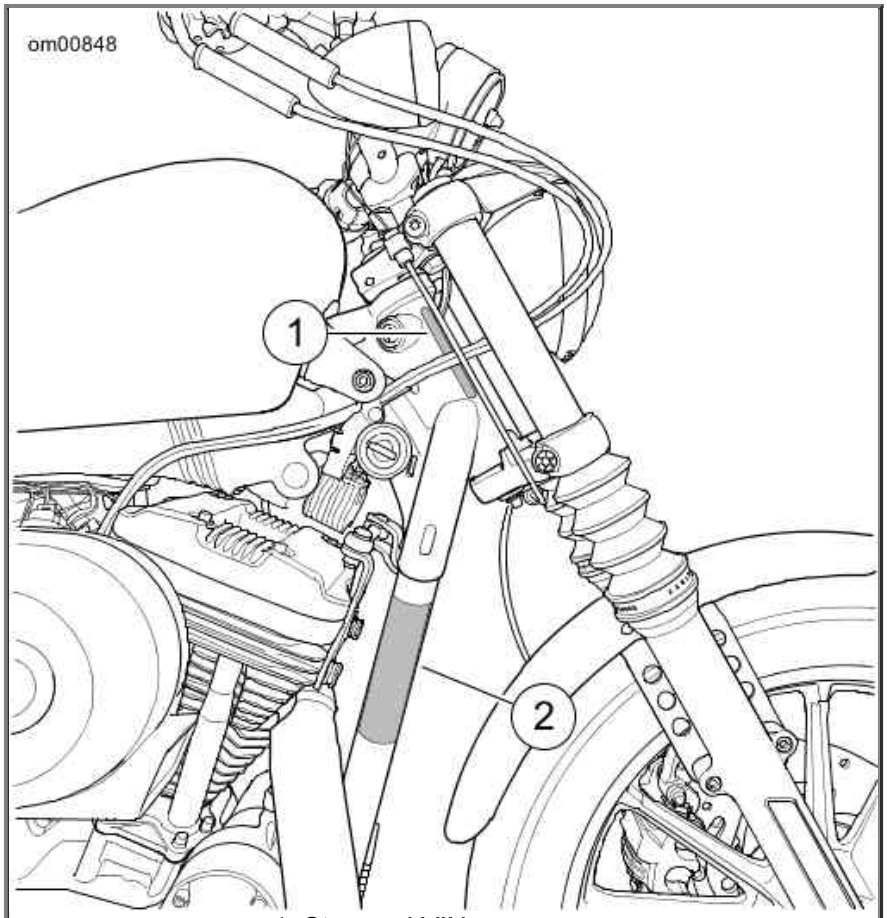

1. Stamped VIN
2. VIN label

VIN Locations: Sportster Models

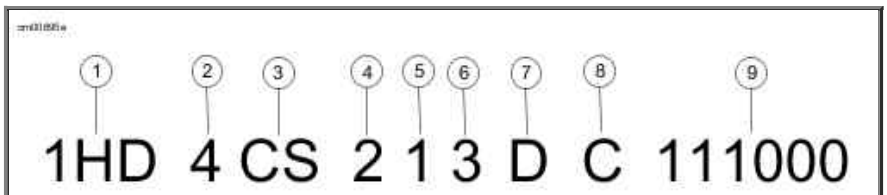

Typical Harley-Davidson VIN: 2013 Sportster Models

Harley-Davidson VIN Breakdown: 2013 Sportster Models

POSITION	DESCRIPTION	POSSIBLE VALUES
1	World manufacturer identifier	1HD=Originally manufactured for sale **within** the United States 5HD=Originally manufactured for sale **outside** of the United States 932=Originally manufactured in and for sale only in Brazil market MEG=Originally manufactured in and for sale only in India market
2	Motorcycle type	1=Heavyweight motorcycle (901 cm^3 or larger) 4=Middleweight motorcycle (351 cm^3 to 900 cm^3)
3	Model	See VIN model table
4	Engine type	2=Evolution® 883 cm^3 air-cooled, fuel-injected 3=Evolution® 1202 cm^3 air-cooled, fuel-injected

		6=Evolution® 1202 cm^3 precision-cooled, fuel-injected	
5	Configuration/calibration, introduction	**Normal Introduction** 1=Domestic (DOM) 3=California (CAL) A=Canada (CAN) C=HDI E=Japan (JPN) G=Australia (AUS) J=Brazil (BRZ) L=Asia Pacific (APC) N=India (IND)	**Mid-year or Special Introduction** 2, 4=Domestic (DOM) 5, 6=California (CAL) B=Canada (CAN) D=HDI F=Japan (JPN) H=Australia (AUS) K=Brazil (BRZ) M=Asia Pacific (APC) P=India (IND)
6	VIN check digit	Can be 0-9 or X	
7	Model year	D=2013	
8	Assembly plant	C=Kansas City, MO U.S.A. D=H-D Brazil-Manaus, Brazil (CKD) N=Haryana India (Bawal District Rewari)	
9	Sequential number	Varies	

VIN Model Codes: 2013 Sportster Models

CODE	MODEL	CODE	MODEL
CR	XL 883L SuperLow®	LE	XL 883N Iron 883™
CS	XL 883R 883 Roadster	LF	XL 1200V Seventy-Two™
CT	XL 1200C 1200 Custom XL 1200C ANV 1200 Custom 110th Anniversary Edition	LH	XL 1200CP 1200 Custom
LC	XL 1200X Forty-Eight™	LJ	XL 1200CA 1200 Custom Limited A
LD	XR1200X™ (Brazil only)	LK	XL 1200CB 1200 Custom Limited B

Models and Features

Some models, features or configurations shown in this manual may not be available in all markets.

Anniversary Models

Anniversary model motorcycles have special badging, paint and serialized numbering.

Refer to the features and instructions for the standard non-anniversary model unless otherwise noted.

Specifications

Specifications

NOTE:

Specifications in this publication may not match those of official certification in some markets due to timing of publication printing, variance in testing methods, and/or vehicle differences. Customers seeking officially recognized regulatory specifications for their vehicle should refer to certification documents and/or contact their respective dealer or distributor.

Transmission

TRANSMISSION	SPECIFICATION
Type	Constant mesh, foot shift
Speeds	5 forward

Engine

ITEM	XL 883 MODELS		XL 1200 MODELS		XR 1200X	
Number of cylinders	2					
Type	4-cycle, 45 degree, V-twin, air cooled					
Compression ratio	8.9-1		9.7-1		10.0-1	
Bore	3.000 in	76.20 mm	3.500 in	88.90 mm	3.500 in	88.90 mm
Stroke	3.812 in	96.82 mm	3.812 in	96.82 mm	3.812 in	96.82 mm
Displacement	53.9 in^3	883 cm^3	73.3 in^3	1202 cm^3	73.3 in^3	1202 cm^3

Electrical: XL Models

COMPONENT	SPECIFICATION	
Ignition timing	Not adjustable	
Battery	12 V, 225 CCA, 12 Ah, sealed and maintenance free	
Charging system	Single-phase, 30 A system (357 W @ 13.5 V, 2000 rpm, 405 W max power @ 13.5 V)	
Spark plug type	6R12	
Spark plug size	12 mm	
Spark plug gap	0.038-0.043 in	0.97-1.09 mm
Spark plug torque	12-18 ft-lbs	16.3-24.4 Nm

Electrical: XR 1200X

COMPONENT	SPECIFICATION
Ignition timing	Not adjustable
Battery	12 V, 225 CCA, 12 Ah, sealed and maintenance free
Charging system	Single-phase, 30 A system

	(357 W @ 13.5 V, 2000 rpm, 405 W max power @ 13.5 V)	
Spark plug type	10R12X	
Spark plug size	12 mm	
Spark plug gap	0.032-0.038 in	0.81-0.97 mm
Spark plug torque	12-18 ft-lbs	16.3-24.4 Nm

Sprocket Teeth

DRIVE	ITEM	NUMBER OF TEETH				
		XL 883 MODELS		XL 1200 MODELS		XR 1200X
		U.S.	WORLD	U.S.	WORLD	U.S./WORLD
Primary	Engine	34	34	38	38	34
	Clutch	57	57	57	57	57
Final	Transmission	29	29	29	30	28
	Rear wheel	68	68	68	68	68

Overall Drive Ratios

GEAR	XL 883 MODELS	XL 1200 MODELS		XR 1200X
	ALL	U.S.	WORLD	U.S./WORLD
1st	10.407	9.315	9.004	10.782
2nd	7.436	6.653	6.432	7.702
3rd	5.530	4.948	4.783	5.728
4th	4.583	4.102	3.965	4.748
5th	3.931	3.517	3.400	4.071

Dimensions: XL 883 Models

ITEM	XL 883R		XL 883L		XL 883N	
	in	mm	in	mm	in	mm
Length	88.4	2245	86.1	2187	85.8	2179
Overall width	36.6	930	36.6	930	32.3	821
Overall height	45.3	1150	47.6	1209	43.6	1107
Wheel base	59.8	1520	59.3	1506	59.8	1519
Road clearance	5.6	141	3.8	97	3.9	99
Seat height*	27.3	693	25.5	648	25.7	653
*With 180 lb 81.7 kg rider on seat.						

Dimensions: XL 1200 Models and XR 1200X

ITEM	XL 1200C/C ANV		XL 1200CA		XL 1200CB		XL 1200X		XL 1200V		XR 1200X	
	in	mm	in	mm	in	mm	in	mm	in	mm	in	mm
Length	87.4	2220	87.6	2225	87.6	2225	88.6	2250	89.4	2270	87.6	2225
Overall width	33.1	841	32.3	820	37.0	940	37.2	831	36.0	915	36.6	930
Overall height	44.9	1140	42.7	1085	48.2	1225	42.0	1067	47.6	1210	45.7	1161
Wheel base	59.9	1521	59.8	1520	59.8	1520	59.8	1519	60.0	1524	60.0	1524

Road clearance	4.4	112	4.3	110	4.3	110	3.9	99	4.7	119	5.9	150
Seat height*	26.6	676	26.6	676	26.6	676	26.0	660	26.6	675	29.2	742
*With 180 lb 81.7 kg rider on seat.												

⚠WARNING

Do not exceed the motorcycle's Gross Vehicle Weight Rating (GVWR) or Gross Axle Weight Rating (GAWR). Exceeding these weight ratings can lead to component failure and adversely affect stability, handling and performance, which could result in death or serious injury. (00016f)

- GVWR is the sum of the weight of the motorcycle, accessories, and the maximum weight of the rider, passenger and cargo that can be safely carried.
- GAWR is the maximum amount of weight that can be safely carried on each axle.
- GVWR and GAWR are shown on the information plate, located on the frame down tube.

NOTE:

The maximum additional weight allowed on the motorcycle equals the Gross Vehicle Weight Rating (GVWR) minus the running weight. For example, a motorcycle with GVWR of 1200 lbs 544 kg having a running weight of 800 lbs 363 kg , would allow a maximum of an additional 400 lbs 181 kg combined weight of the rider, passenger, riding gear, cargo and installed accessories.

Weights: XL 883 Models

ITEM	XL 883L		XL 883R		XL 883N	
	lb	kg	lb	kg	lb	kg
Running weight*	563	255.4	573	260.0	565	256.3
Maximum added weight allowed**	437	198.2	427	193.7	435	197.3
GVWR	1000	453.6	1000	453.6	1000	453.6
GAWR front	339	154.0	335	152.0	335	152.0
GAWR rear	661	300.0	665	301.6	665	301.6
*The total weight of the motorcycle as delivered with all oil/fluids and approximately 90% of fuel. **The total weight of accessories, cargo, riding gear, passenger and rider cannot exceed this weight.						

Weights: XL 1200 Models and XR 1200X

ITEM	XL 1200C/CANV		XL 1200CA		XL 1200CB		XL 1200X		XL 1200V		XR 1200X	
	lb	kg	lb	kg	lb	kg	lb	kg	lb	kg	lb	kg
Running weight*	582	264.0	573	260.0	573	260.0	567	257.2	555	251.7	573	259.9
Maximum added weight allowed**	418	189.6	427	193.7	427	193.7	433	196.4	445	201.8	427	193.7
GVWR	1000	453.6	1000	453.6	1000	453.6	1000	453.6	1000	453.6	1000	453.6
GAWR, front	335	152.0	335	152.0	335	152.0	335	152.0	335	152.0	340	154.2
GAWR, rear	665	301.6	665	302.0	665	302.0	665	301.6	665	301.6	660	299.4
*The total weight of the motorcycle as delivered with all oil/fluids and approximately 90% of fuel. **The total weight of accessories, cargo, riding gear, passenger and rider cannot exceed this weight.												

Capacities: XL 883 Models

ITEM	XL 883R		XL 883L		XL 883N	
	U.S.	METRIC	U.S.	METRIC	U.S.	METRIC
Fuel tank (total)	3.3 gal	12.5 L	4.5 gal	17.0 L	3.3 gal	12.5 L
Oil tank with filter	2.8 qt	2.6 L	2.8 qt	2.6 L	2.8 qt	2.6 L
Transmission (approximate)	1.0 qt	0.95 L	1.0 qt	0.95 L	1.0 qt	0.95 L
Low fuel warning light	0.8 gal	3.0 L	1.0 gal	3.8 L	0.8 gal	3.0 L

Capacities: XL 1200 Models and XR 1200X

ITEM	XL 1200C/C ANV/CP/CA/CB		XL 1200X/V		XR 1200X	
	U.S.	METRIC	U.S.	METRIC	U.S.	METRIC
Fuel tank (total)	4.5 gal	17.0 L	2.1 gal	7.9 L	3.5 gal	13.2 L
Oil tank with filter	2.8 qt	2.6 L	2.8 qt	2.6 L	2.8 qt	2.6 L
Transmission (approximate)	1.0 qt	0.95 L	1.0 qt	0.95 L	1.0 qt	0.95 L
Low fuel warning light	1 gal	3.8 L	0.65 gal	2.5 L	0.8 gal	3.0 L

Bulb Chart

LAMP	DESCRIPTION (ALL LAMPS 12 V)	BULBS REQUIRED	CURRENT DRAW (AMPERAGE)	HARLEY-DAVIDSON PART NUMBER
Headlamp	High beam/low beam	1	5.0/4.58	68329-03
	Position lamp international	1	0.32	53436-97
Indicator lamp module	All models***	-	-	LED assembly
License plate lamp	XL 883N, XL 1200X/V (Domestic)***	-	-	LED assembly
	XL 883N, XL 1200X/V (HDI)	2	0.35	52441-95
Tail and stop lamp	Tail and stop lamp XL 1200C/C ANV/CP/CA/CB***	-	-	LED assembly
	Tail and stop lamp (all other models)	1	2.10/0.59	68167-04
Turn signal lamp	Front/running	2	2.25/0.59	68168-89A
	Front international	2	1.75	68163-84
	Rear (Domestic XL 883N, XL 1200X/V)**	2	2.25	68168-89A
	Rear (Canada XL 883N, XL 1200X)	-	2.25	68572-64B
	Rear (HDI XL 883R, XL 1200X/V)***	2	-	LED assembly
	Rear (all other models)	2	1.75	68163-84

* XL 1200C/C ANV/CP/CA/CB tail and stop lamp is illuminated with LED's. Replace entire assembly upon failure.

** Functions as turn signal, tail and stop lamps.

*** This is an LED assembly. Replace entire assembly upon failure.

Specified Tires

MODEL	MOUNT	DIAMETER	SPECIFIED TIRE	PRESSURE (cold)	
				psi	kPa
XL 883L	front	18	Michelin Scorcher "11F" 120/70ZR18	36	248
	rear	17	Michelin Scorcher "11" 150/60ZR17	42	290
XL 883R/N	front	19	Michelin Scorcher "31" 100/90B19	30	207
	rear	16	Michelin Scorcher "31" 150/80B16	40	276
XL 1200X/C/C ANV/CP XL 1200CA/CB	front	16	Michelin Scorcher "31" 130/90B16	36	248
	rear	16	Michelin Scorcher "31" 150/80B16	40	276
XL 1200V	front	21	Dunlop D402F MH90-21	30	207
	rear	16	Dunlop D401 150/80B16	40	276
XR 1200X	front	18	Michelin Scorcher "11F" 120/70ZR18	36	248
	rear	17	Michelin Scorcher "11" 180/55ZR17	42	290

Tire Data

⚠WARNING

Match tires, tubes, rim strips or seals, air valves and caps to the correct wheel. Contact a Harley-Davidson dealer. Mismatching can lead to tire damage, allow tire slippage on the wheel or cause tire failure, which could result in death or serious injury. (00023c)

⚠WARNING

Use only Harley-Davidson specified tires. See a Harley-Davidson dealer. Using non-specified tires can adversely affect stability, handling or braking, which could result in death or serious injury. (00024b)

Always match recommended tires. Do not mix specified tire brands. Refer to Specified Tires.

Tubeless tires are used on all Harley-Davidson cast and disc wheels. Tubeless tires fitted with the correct size inner tubes may be used on Harley-Davidson laced (wire spoked) wheels. Tire sizes are molded on the tire sidewall. Inner tube sizes are printed on the tube.

⚠WARNING

Harley-Davidson front and rear tires are not the same. Interchanging front and rear tires can cause tire failure, which could result in death or serious injury. (00026a)

⚠WARNING

Replace tire immediately with a Harley-Davidson specified tire when wear bars become visible or only 1/32 in (0.8 mm) tread depth remains. Riding with a worn tire could result in death or serious injury. (00090c)

Harley-Davidson does not perform any testing with only nitrogen in the tires. Harley-Davidson neither recommends nor discourages the use of pure nitrogen to inflate tire.

India Tire Compliance Statement: Harley-Davidson Motor Company declares that the tires listed in the specifications section meet the Indian Standard 15627 requirement of the Bureau of Indian Standards (as amended from time to time) required for registration of vehicles assembled in India. These tires also comply with the Central Motor Vehicle Rules requirements, 1989.

Gasoline Blends

Your motorcycle was designed to get the best performance and efficiency using unleaded gasoline. Most gasoline is blended with alcohol and/or ether to create oxygenated blends. The type and amount of alcohol or ether added to the fuel is important.

CAUTION

Do not use gasoline that contains methanol. Doing so can result in fuel system component failure, engine damage and/or equipment malfunction. (00148a)

- Gasoline/METHYL TERTIARY BUTYL ETHER (MTBE) blends are a mixture of gasoline and as much as 15% MTBE. Gasoline/MTBE blends use in your motorcycle is approved.
- ETHANOL fuel is a mixture of ethanol (grain alcohol) and unleaded gasoline and can have an impact on fuel mileage. Fuels with an ethanol content of up to 10% may be used in your motorcycle without affecting vehicle performance. U.S. EPA regulations currently indicate that fuels with 15% ethanol (E15) are restricted from use in motorcycles at the time of this publication. Some motorcycles are calibrated to operate with higher ethanol concentrations to meet the fuel standards in certain countries.
- REFORMULATED OR OXYGENATED GASOLINES (RFG) describes gasoline blends that are specifically designed to burn cleaner than other types of gasoline. This results in fewer tailpipe emissions. They are also formulated to evaporate less when filling the tank. Reformulated gasolines use additives to oxygenate the gas. Your motorcycle will run normally using this type of fuel. Harley-Davidson recommends using it whenever possible as an aid to cleaner air in our environment.
- Do not use racing fuel or fuel containing methanol. Use of these fuels will damage the fuel system.
- The only octane booster Harley-Davidson recommends is SCREAMIN' EAGLE SUPER OCTANE BOOST (available only in the U.S.). This is the only octane booster that has been extensively tested and approved for use with Harley-Davidson engines and components.

Some gasoline blends might adversely affect starting, driveability or fuel efficiency. If any of these problems are experienced, try a different brand of gasoline or gasoline with a higher octane blend.

Fuel

Always use a good quality unleaded gasoline. Octane ratings are usually found on the pump. Refer to Octane Ratings.

⚠WARNING

Avoid spills. Slowly remove filler cap. Do not fill above bottom of filler neck insert, leaving air space for fuel expansion. Secure filler cap after refueling. Gasoline is

extremely flammable and highly explosive, which could result in death or serious injury. (00028a)

⚠WARNING

Use care when refueling. Pressurized air in fuel tank can force gasoline to escape through filler tube. Gasoline is extremely flammable and highly explosive, which could result in death or serious injury. (00029a)

Modern service station pumps dispense a high flow of gasoline into a motorcycle fuel tank making air entrapment and pressurization a possibility.

Octane Ratings

SPECIFICATION	RATING
Pump Octane (R+M)/2	91 (95 RON)

Catalytic Converters

Certain international destination model motorcycles are equipped with catalytic converters.

CAUTION

Do not operate catalytic converter-equipped vehicle with engine misfire. If you operate the vehicle under this condition, the exhaust will become abnormally hot, which can cause vehicle damage, including emission control loss. (00149c)

CAUTION

Use only unleaded fuel in catalytic converter-equipped motorcycles. Using leaded fuel will damage the emission control system. (00150b)

Controls and Indicators

General: Controls and Indicators

⚠WARNING

Read the CONTROLS AND INDICATORS section before riding your motorcycle. Failure to understand the operation of the motorcycle could result in death or serious injury. (00043a)

Some features explained are unique to certain models. These features may be available as accessories for your Harley-Davidson motorcycle. See a Harley-Davidson dealer for a complete list of accessories that will fit your specific motorcycle.

Ignition Switch

⚠WARNING

The automatic on headlamp feature provides increased

The automatic-on headlamp feature provides increased visibility of the rider to other motorists. Be sure headlamp is on at all times. Poor visibility of rider to other motorists can result in death or serious injury. (00030b)

See Ignition Switch: Sportster Models. The ignition switch controls electrical functions of the motorcycle. The switch is located on the right side of the steering head. Refer to Ignition Switch.

Turn the key to the OFF position and remove key when the motorcycle is not in operation. The key may also be removed in the ACC position.

NOTES:

- *Write the ignition key number in the space provided at the front of this manual.*
- *The lamps work when the switch is in the IGNITION position, as required by law in some localities.*

CAUTION

Protect your vehicle against theft. Failure to lock the motorcycle after parking could result in theft and/or equipment damage. (00151b)

⚠WARNING

Do not operate vehicle with forks locked. Locking the forks restricts the vehicle's turning ability, which could result in death or serious injury. (00035a)

CAUTION

Do not lubricate barrel locks with petroleum based lubricants or graphite. Inoperative locks may result. (00152a)

CAUTION

Turn the ignition switch to the OFF position before locking the motorcycle. Leaving the switch in the ACC position will keep the instrument lights on and result in a discharged battery. (00492b)

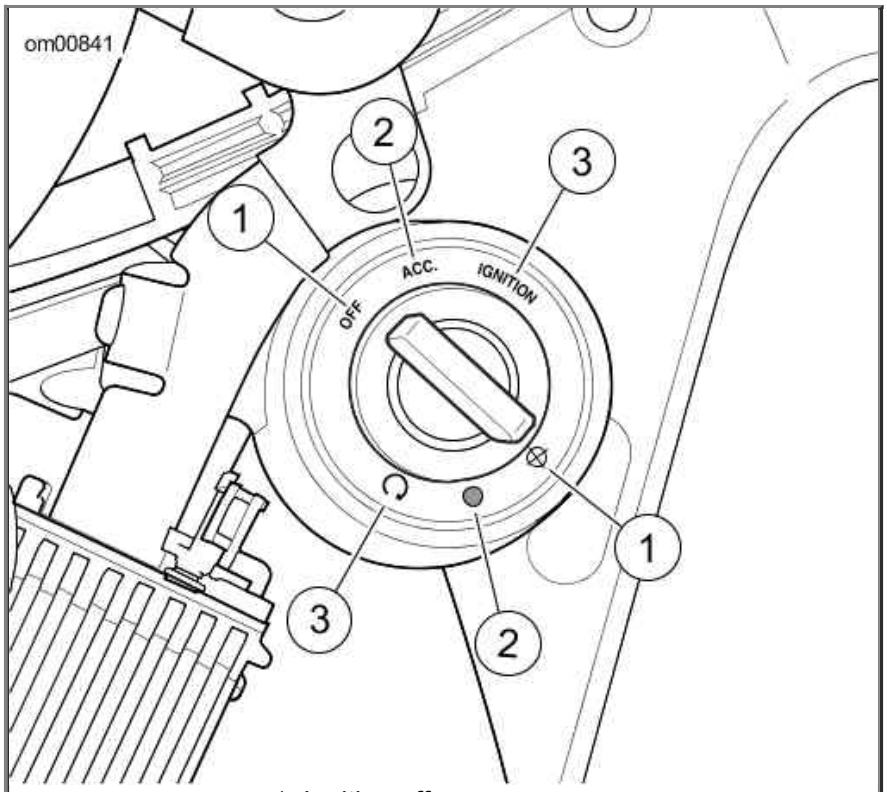

1. Ignition off
2. Accessory on
3. Ignition on

Ignition Switch: Sportster Models

Ignition Switch

SWITCH POSITION	FUNCTION
OFF	Ignition and lamps are off. Key may be removed.
ACC.*	Instrument lamps are on. Brake lamp and horn can be activated. Key may be removed.
IGNITION	Ignition and lamps are on.
*International models: position lamp and tail lamp are also on.	

Hand Controls: Basic Operation

Electric Starter Switch

NOTE:

The OFF/RUN switch MUST be in RUN position to operate engine.

See Handlebar Controls. The electric starter switch is located on the right handlebar control group. See Starting the Engine for detailed operation procedures.

1. Put the engine OFF/RUN switch in the RUN position and the transmission in neutral. Neutral (green) indicator lamp should be illuminated.
2. See Ignition Switch: Sportster Models. Turn ignition switch to IGNITION and push the START switch to operate starter motor.

Engine OFF/RUN Switch

See Handlebar Controls. The engine OFF/RUN switch (7) turns the ignition power ON or OFF. The engine OFF/RUN switch is located on the right handlebar control. Push the top portion of the engine OFF/RUN switch to turn off ignition power and shut the engine off. Push the bottom portion of the engine OFF/RUN switch to turn on ignition power.

NOTES:

- *The engine OFF/RUN switch must be in the RUN position to start or operate the engine.*
- *The engine OFF/RUN switch should be used to shut the engine off.*

1. To shut the engine off, push the top of the OFF/RUN switch to the OFF position.
2. See Ignition Switch: Sportster Models. Turn the ignition key to the OFF position to turn the ignition power completely OFF.

Throttle Control Grip

See Handlebar Controls. The throttle control grip (9) is located on the right handlebar control and is operated with the right hand.

To reduce rider fatigue on long trips, a spring-loaded throttle friction adjustment screw (10) is located at the bottom of the throttle grip clamp on non-cruise equipped models.

1. Slowly turn throttle control grip clockwise (toward the front of the motorcycle) to close the throttle (decelerate).
2. Slowly turn throttle control grip counterclockwise (toward rear of motorcycle) to open the throttle (accelerate).

⚠WARNING

Do not tighten throttle friction adjustment screw to the point where the engine will not return to idle automatically. Over-tightening can lead to loss of vehicle control, which could result in death or serious injury. (00031b)

3. Loosen the throttle friction adjustment screw so the throttle returns to the idle position when the hand is removed from the grip.
4. Screw the throttle adjustment screw in to increase friction on grip. This provides a damping effect on throttle motion.

NOTE:

The throttle friction adjustment screw should not be used under normal stop and go operating conditions.

Clutch Hand Lever

⚠WARNING

Do not position fingers between hand control lever and handlebar grip. Improper hand positioning can impair control lever operation and cause loss of vehicle control, which could result in death or serious injury. (00032a)

See Handlebar Controls. The clutch hand lever (1) is located on the left handlebar and is operated with the fingers of the left hand.

1. Slowly pull clutch hand lever in against handlebar grip to fully disengage clutch.
2. Shift to first gear using the gear shifter lever. See Gear Shift Lever.

3. Slowly release the clutch hand lever to engage clutch.

A clutch switch is incorporated into the left handlebar switch assembly. It enables the rider to start the vehicle in any gear (or in neutral) as long as the clutch lever is pulled in. If the clutch is not disengaged and the vehicle is in gear, the vehicle will not start.

Horn Switch

See Handlebar Controls. The horn is operated by pushing on the horn switch (2) located on the left handlebar control.

Headlamp Dimmer Switch

See Handlebar Controls. The headlamp dimmer switch (3) is located on the left handlebar. The switch has two positions to activate the headlamps high or low beams.

- Press the top of the headlamp dimmer beam switch to activate the high beam.
- Press the bottom of the headlamp dimmer switch to return to the low beam.

See Indicator Bar. The (blue) high beam indicator lamp will illuminate when the high beam is on.

Turn Signal Switches

See Handlebar Controls. Each handlebar control group contains a turn signal switch.

- The right turn signal switch (11) operates the right front and right rear flashing lamps.
- The left turn signal switch (4) operates the left front and left rear flashing lamps.

NOTE:

Front turn signal lamps also function as running lamps. Due to local regulations, this feature may not be available in all locations.

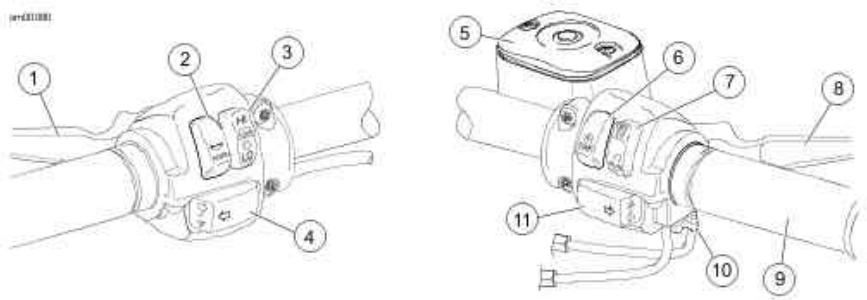

1. Clutch hand lever
2. Horn switch
3. Headlamp dimmer switch
4. Left turn signal switch
5. Master cylinder reservoir
6. Electric starter switch
7. Engine off/run switch
8. Brake hand lever
9. Throttle control grip
10. Throttle friction adjusting screw
11. Right turn signal switch

Handlebar Controls

Turn Signal Switch Operation

Operating

Press and release the left or right turn signal switch to activate the turn signal lamps. The lamps flash until they are automatically canceled or manually canceled by the rider.

NOTE:

If a turn signal indicator flashes rapidly, a turn signal bulb is not operating. Exercise caution and use hand signals. Replace defective components at earliest opportunity.

Automatic Canceling

The turn signal lamps automatically cancel when a full turn has been detected (based on vehicle speed, vehicle acceleration, and turn completion).

The lamps also cancel if the turn signal has been activated for a prolonged period while the vehicle speed is greater than 7 mph 11 km/h . If the motorcycle is stopped or moving slower than this speed, the turn signal continues flashing.

Manual Canceling

To cancel the turn signal, press and release the turn signal switch a second time.

To activate the opposite turn signal, press and release the turn signal switch for the new direction. The first turn signal cancels and the opposite turn signal lamps begin flashing.

Hazard Warning Four-Way Flasher

If the motorcycle must be parked alongside a roadway, the hazard warning four-way flashers can be turned on with the security system armed. This allows a stranded motorcycle to be secured with the four-way flashers operating until help is found.

Activate

1. Turn the ignition switch to IGNITION with security system disarmed (fob present, if equipped).
2. Press the left and right turn signal switches at the same time.
3. Turn the ignition switch OFF and lock the switch. The four-way flashers will operate for two hours. The security system (if equipped) will automatically arm.

Deactivate

1. Have the fob present to disarm the security system (if equipped).
2. Unlock the ignition switch and turn the switch to IGNITION.
3. Press the left and right turn signal switches at the same time.

Instruments

Speedometer

⚠WARNING

Travel at speeds appropriate for road and conditions and never travel faster than posted speed limit. Excessive speed can cause loss of vehicle control, which could result in death or serious injury. (00008a)

- **XL Models:** See Instruments: XL Models.
- **XR 1200X:** See Instruments: XR 1200X.

The speedometer registers miles per hour (US models) or kilometers per hour (international models) of forward speed. The speedometer also provides the following selectable functions:

- Odometer
- Trip odometers A and B
- 12 or 24 hour clock

The speedometer has a single display window for the above functions.

1. See Function Switch (typical). Pressing the function switch (on back of speedometer) with the ignition switch in any position will activate the odometer reading and time. Time and mileage or kilometers may be checked without unlocking ignition switch. Press and release function switch (on back of speedometer) once to view odometer. Press and release the switch again to display time.

2. To check mileage on trip odometers, the ignition switch must be in the ACC or IGNITION position. Press and release the function switch (on back of speedometer) until the desired trip odometer reading is displayed. An A or B in the upper left of the display window identifies trip odometers.

3. To reset or zero trip odometers, have desired (A or B) odometer in display window. Press function switch (on back of speedometer) and hold switch for 2-3 seconds. The trip odometer will be reset to zero.

4. Repeat the previous step if you wish to zero both trip odometers.

Setting Clock

---

1. Turn the ignition switch to ACC or IGNITION.

2. See Function Switch (typical). Press and release function switch (on back of speedometer) until time (hour and minutes) is displayed. Press and hold the function switch for five seconds or until 12HR begins to blink in the speedometer display window. Release the switch.

3. Press and release the function switch (on back of speedometer) once to advance to a blinking 24HR military style time display. Each time you press and release the switch, the display will switch between 12HR and 24HR.

4. When the desired time style is displayed, press and hold the function switch (on back of speedometer) for five seconds. The display will switch to the time display with the hours blinking.

5. Press and release the function switch repeatedly to advance the hours. Each time you press and release the switch, the display will advance one hour.

   NOTE:

   No AM or PM time setting is required. When the correct hour is reached, press and hold function switch to advance to minute setting.

6. When the correct hour is displayed, press and hold the function switch for five seconds. The minutes display will start blinking.

7. Press and release the function switch repeatedly to advance the minutes display. Each time you press and release the switch, the display will advance one minute.

8. When the correct minutes are displayed, press and hold the switch for five seconds. The minutes display will stop blinking, indicating that the clock has been set.

9. Turn the ignition switch OFF.

Tachometer

CAUTION

See OPERATING RECOMMENDATIONS section. Do not operate the engine above maximum safe RPM as shown under OPERATION (red zone on tachometer). Lower the RPM by upshifting to a higher gear or reducing the amount of throttle. Failure to lower RPM may cause equipment damage. (00159a)

The tachometer (if applicable) registers the engine speed in revolutions per minute (RPM).

Tip Indicator Lamp

⚠WARNING

If tip occurs, check all controls for proper operation. Restricted control movement can adversely affect the performance of the brakes, clutch or ability to shift, which could result in loss of vehicle control and death or serious injury. (00350a)

Should motorcycle be tipped over, the word "tip" will appear in the odometer window. Engine will not start until reset. To reset, cycle ignition/headlamp key switch IGNITION-OFF-IGNITION.

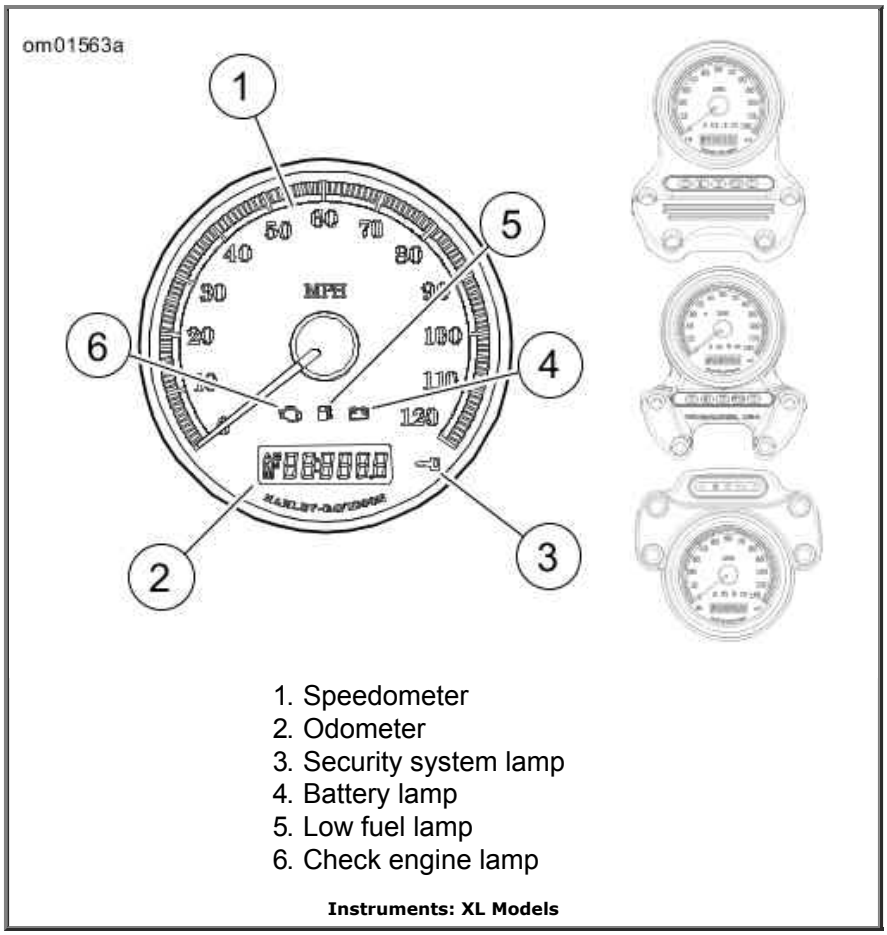

1. Speedometer
2. Odometer
3. Security system lamp
4. Battery lamp
5. Low fuel lamp
6. Check engine lamp

Instruments: XL Models

Selecting Instrument Units: XR 1200X

On XR 1200X, units displayed in the instruments can be selected between miles and kilometers.

1. Turn the ignition switch to the ACC or IGNITION position.
2. Press the function switch to select the odometer display screen.
3. Press and hold the function switch until the units change (miles/kilometers).
4. To change the units again, release function switch, then press and hold until units change again.

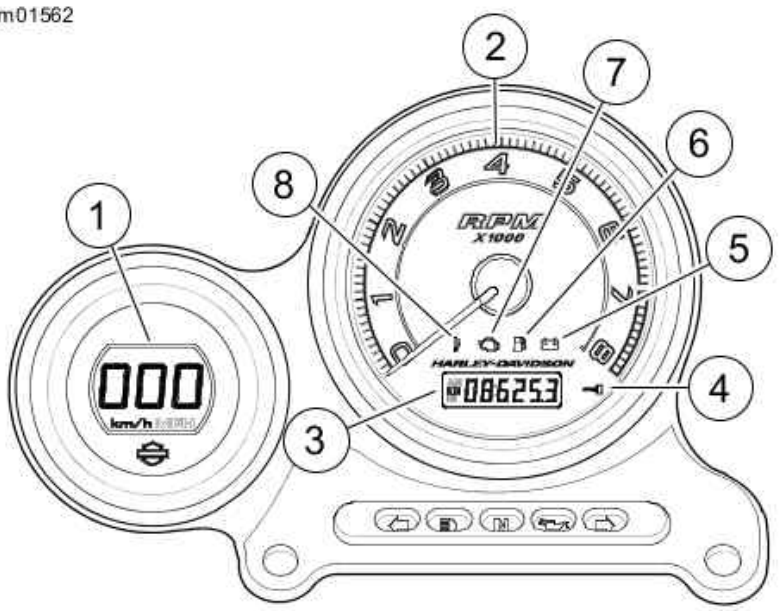

1. Speedometer
2. Tachometer
3. Odometer
4. Security system lamp
5. Battery lamp
6. Low fuel lamp
7. Check engine lamp
8. Temperature lamp

Instruments: XR 1200X

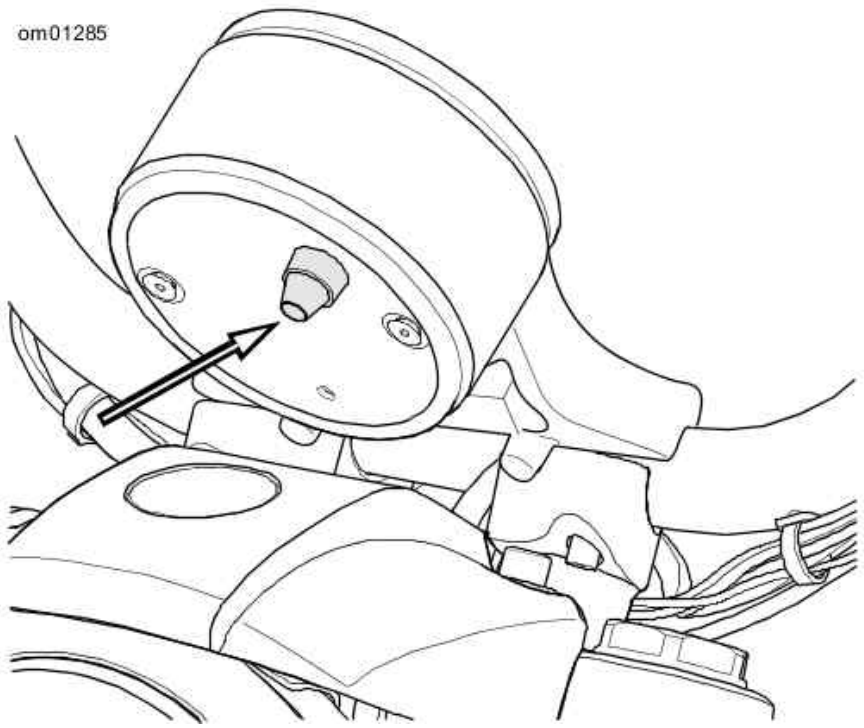

Function Switch (typical)

Instrument Lamps

- **XL Models:** See Instruments: XL Models.
- **XR 1200X:** See Instruments: XR 1200X.

Warning lamps are located on the instrument face.

Check Engine Lamp

The check engine lamp indicates whether the engine/engine management system is operating normally. The engine lamp color is amber.

The check engine lamp normally comes on when the ignition is first turned on and remains on for approximately 4 seconds, as the engine management system runs a series of self-diagnostics.

If the check engine lamp comes on at any other time, see a Harley-Davidson dealer.

Low Fuel Lamp

Refer to Capacities: XL 883 Models. The low fuel lamp indicates when fuel falls below the reserve level in the fuel tank. The low fuel lamp color is amber.

The low fuel lamp will not turn off until there is sufficient fuel in the tank, the ignition switch has been turned off and back on, and the vehicle has begun forward speed. If the low fuel lamp remains lit with sufficient fuel in the tank, there may be an issue with the fuel sender. See a Harley-Davidson dealer.

Battery Lamp

The red battery charging lamp indicates either overcharging or undercharging of the battery. Refer to Battery.

Security System Lamp

The red security system lamp indicates when the security system is armed. Refer to Harley-Davidson Smart Security System.

If the lamp remains lit longer than four seconds, the security module may need to be serviced. See a Harley-Davidson dealer.

Temperature Lamp: XR 1200X

The red temperature lamp indicates extreme high temperatures. Stop the engine immediately and allow the engine to cool down. See a Harley-Davidson dealer if the condition persists.

Indicator Lamps

See Indicator Bar. Five indicator lamps are provided.

- The left (1) and right (5) green TURN indicators flash when a turn signal is activated. When the 4-way hazard flashers are operating, both turn indicators will flash simultaneously.
- The blue BEAM indicator lamp (2) will illuminate for high beam headlamp operation.
- The green NEUTRAL lamp (3) indicates the transmission is in neutral gear.
- The red OIL indicator lamp (4) indicates that oil is not circulating through the engine.

NOTE:

The OIL indicator lamp will glow when the ignition is turned on prior to starting engine. With

engine running, lamp should be off when engine speed is above idle.

Circumstances that could cause the oil indicator lamp to illuminate:

- Low oil level. Stop engine immediately. Add oil.
- Diluted oil. Change oil as soon as possible.
- Incorrect oil for the operating temperature. Change oil as soon as possible.
- See Troubleshooting for further information.

CAUTION

If the oil pressure indicator lamp remains lit, always check the oil supply first. If the oil supply is normal and the lamp is still lit, stop the engine at once and do not ride further until the trouble is located and the necessary repairs are made. Failure to do so may result in engine damage. (00157a)

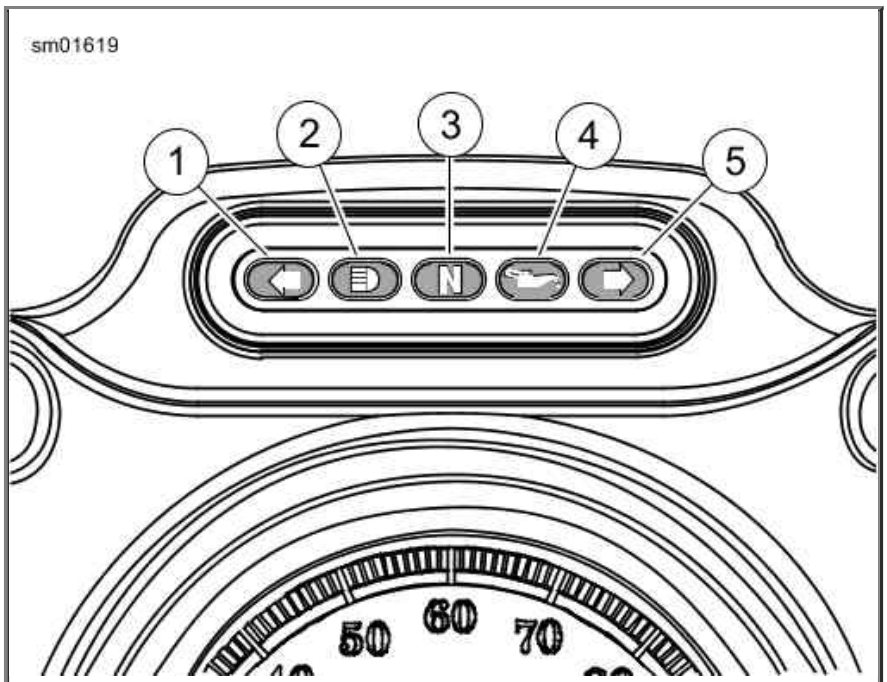

1. Left turn
2. High beam
3. Neutral
4. Oil pressure
5. Right turn

Indicator Bar

Gear Shift Lever

Location

See Shift Lever and Shift Pattern. The gear shift lever is located on the left side of the motorcycle and is operated with the left foot. The shift lever changes gears in a sequential five-speed transmission.

Shift Pattern

CAUTION

The clutch must be fully disengaged before attempting a gear shift. Failure to fully disengage the clutch can result

in equipment damage. (00182a)

See Shift Lever and Shift Pattern. Each gear must be engaged in sequence. Lift the gear shift lever to upshift and press the lever to downshift. After each gear change, release the gear shift lever to allow it to return to its resting position. See Shifting Gears.

Neutral

Neutral is located between first and second gear. The transmission can be shifted to neutral from either first or second gear. Lift or press the gear shift lever 1/2 of its stroke. In neutral, the indicator lamp will light.

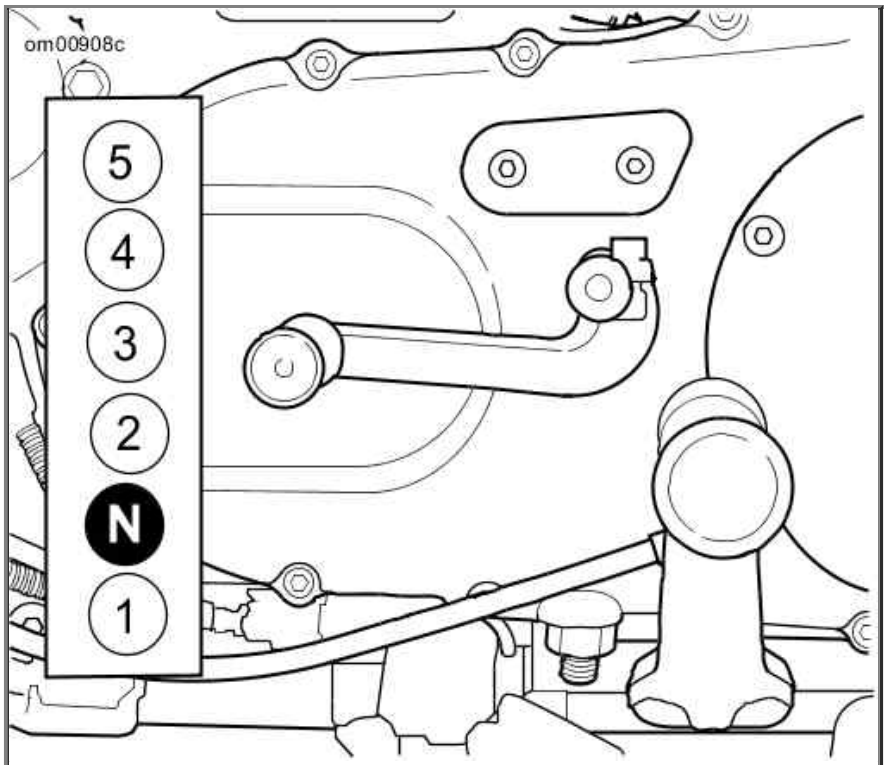

Shift Lever and Shift Pattern

Brake System

⚠WARNING

Do not apply brake strongly enough to lock the wheel. A locked wheel will skid and can cause loss of vehicle control, which could result in death or serious injury. (00053a)

The rear brake pedal controls the rear wheel brake and is located on the motorcycle's right side. Operate the rear brake pedal with the right foot.

The front brake hand lever controls the front wheel brake and is located on the right handlebar. Operate the hand lever with the fingers of the right hand.

⚠WARNING

Do not position fingers between hand control lever and handlebar grip. Improper hand positioning can impair control lever operation and cause loss of vehicle control, which could result in death or serious injury. (00032a)

Brakes should be applied uniformly and evenly to prevent wheels from locking up. A balance

between rear and front braking is generally best.

Jiffy Stand

⚠WARNING

Always park motorcycle on a level, firm surface. An unbalanced motorcycle can fall over, which could result in death or serious injury. (00039a)

The jiffy stand is located on the left side of the motorcycle and swings outward to support the motorcycle for parking.

⚠WARNING

The jiffy stand locks when placed in the full forward (down) position with vehicle weight on it. If the jiffy stand is not in the full forward (down) position with vehicle weight on it, the vehicle can fall over which could result in death or serious injury. (00006a)

⚠WARNING

Be sure jiffy stand is fully retracted before riding. If jiffy stand is not fully retracted, it can contact the road surface causing a loss of vehicle control, which could result in death or serious injury. (00007a)

Jiffy Stand Interlock: International Models

Some international models have a jiffy stand interlock.

The motorcycle will start and run with the jiffy stand down while the transmission is in neutral. If the jiffy stand is down and the transmission in gear, engaging the clutch stalls the motorcycle. The message "SidE StAnd" will scroll across the odometer. Raising the jiffy stand or putting the transmission in neutral, will permit the engine to run. The odometer will clear the message.

If the stand lowers at a speed greater than 10 mph 15 km/h , the engine will continue to run. It will illuminate the indicators (flash twice) and scroll the message "SidE StAnd" across the odometer. The message will remain until the system detects the jiffy stand in the fully retracted position again. The rider may continue to ride while in this mode.

The rider may clear the text messages at any time by pressing the function switch once while the vehicle is powered up.

Rear View Mirrors

⚠WARNING

Objects in mirrors are closer than they appear. Use caution when judging distance of objects in mirrors. Failure to judge correct distances could result in death or serious injury. (00033a)

Your vehicle is equipped with two convex rear view mirrors.

This type of mirror is designed to give a much wider view to the rear than a flat mirror. However, cars and other objects seen in this type of mirror will look smaller and farther away than they actually are.

- Use caution when judging the size or relative distance of objects seen in rear view mirrors.
- Always adjust the rear view mirrors to clearly reflect the area behind the motorcycle before riding.

NOTE:

Adjust mirrors so you can see a small portion of your shoulders in each mirror. This will help you establish the relative distance of vehicles to the rear of your motorcycle.

Rear View Mirrors: XL 1200X

CAUTION

Improperly aligned handlebars or components can contact the fuel tank when turned to the left or right. Contact with the fuel tank can cause cosmetic damage. (00372b)

See Rear View Mirror: XL 1200X. When adjusting mirrors, slowly turn handlebars to the full right and full left positions to make sure the mirrors do not contact the fuel tank.

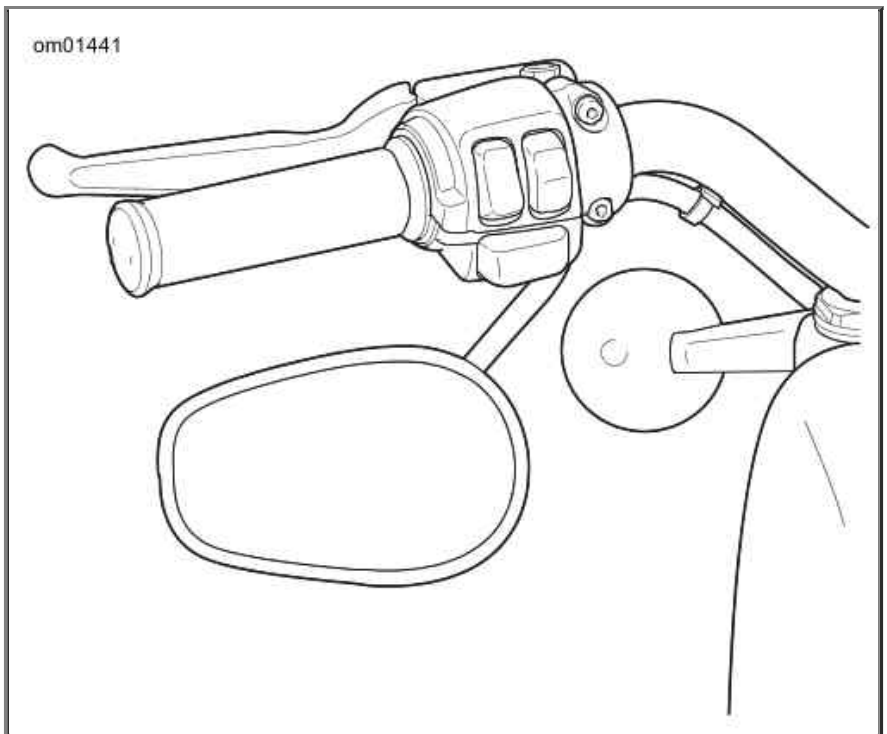

Rear View Mirror: XL 1200X

Fuel Filler Cap

General

See SAFE OPERATING RULES section and review safety procedures listed below.

CAUTION

Do not spill fuel onto the motorcycle while refueling. Immediately wipe up fuel spills on your motorcycle. Fuel can cause damage to cosmetic surfaces. (00147b)

CAUTION

Use only unleaded fuel in catalytic converter-equipped motorcycles. Using leaded fuel will damage the emission

control system. (00150b)

⚠WARNING

Do not store motorcycle with gasoline in tank within the home or garage where open flames, pilot lights, sparks or electric motors are present. Gasoline is extremely flammable and highly explosive, which could result in death or serious injury. (00003a)

⚠WARNING

Avoid spills. Slowly remove filler cap. Do not fill above bottom of filler neck insert, leaving air space for fuel expansion. Secure filler cap after refueling. Gasoline is extremely flammable and highly explosive, which could result in death or serious injury. (00028a)

⚠WARNING

Do not use aftermarket fuel caps. Aftermarket fuel caps may fit improperly and leak, which could lead to death or serious injury. See a Harley-Davidson dealer for approved fuel caps. (00034a)

XL Models

See Fuel Filler Cap: XL Models. To open, turn fuel filler cap counterclockwise and lift up. To close, turn fuel filler cap clockwise until it clicks. The ratchet action of the cap prevents overtightening.

NOTE:

Fuel filler cap turns approximately a 3/4 turn before it starts unscrewing.

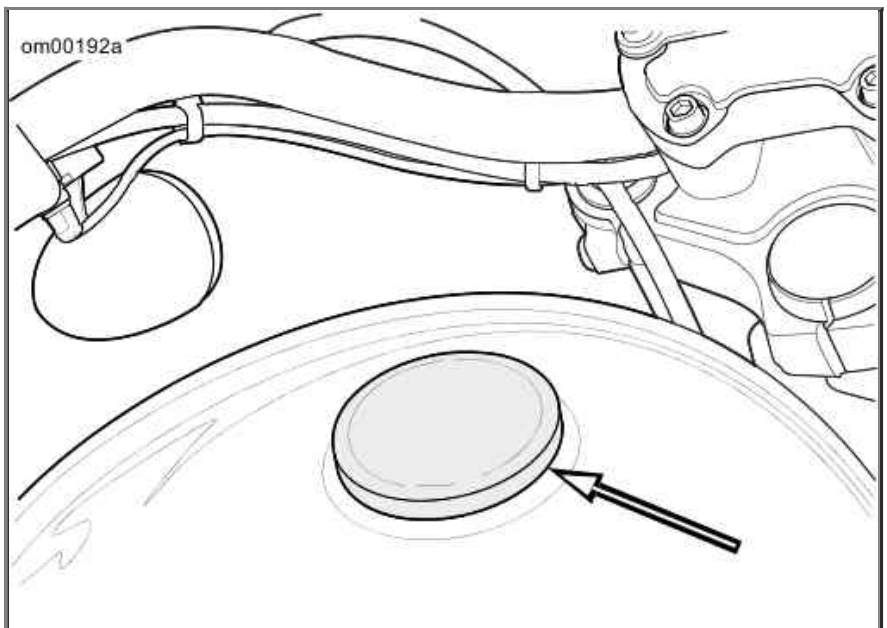

Fuel Filler Cap: XL Models

XR 1200X

See Fuel Filler Cap: XR 1200X. To open fuel filler cap, pull metal tab up, turn tab

counterclockwise and remove cap. To close, insert fuel filler cap, turn tab clockwise and push tab down.

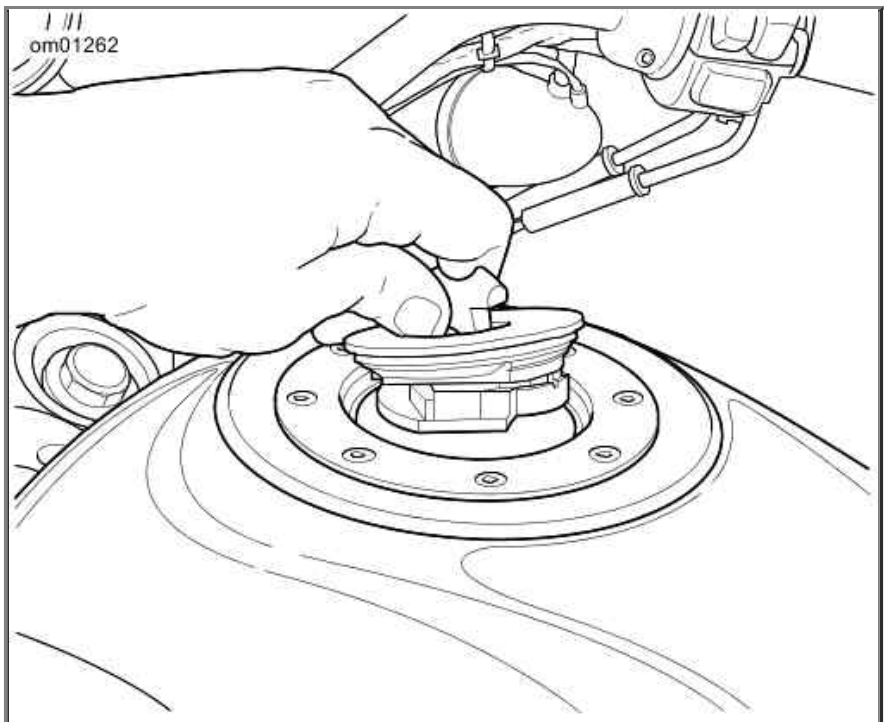

Fuel Filler Cap: XR 1200X

Fork Lock

CAUTION

Protect your vehicle against theft. Failure to lock the motorcycle after parking could result in theft and/or equipment damage. (00151b)

See Fork Lock Location: Sportster Models. Sportster models have the fork lock located on the steering head just above the ignition switch. Using the fork lock immediately after parking your motorcycle will discourage unauthorized use or theft when parking your motorcycle.

⚠WARNING

Do not operate vehicle with forks locked. Locking the forks restricts the vehicle's turning ability, which could result in death or serious injury. (00035a)

To lock fork, see Fork Lock Positions: Sportster Models.

1. Turn fork to full left position.
2. Insert ignition key into fork lock.
3. Turn to right position (clockwise).
4. Remove ignition key.

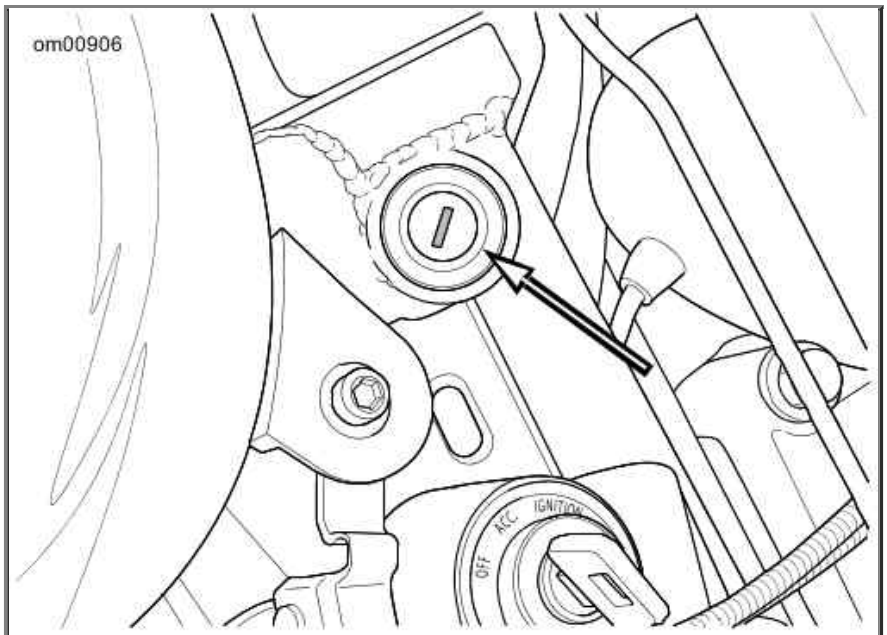

Fork Lock Location: Sportster Models

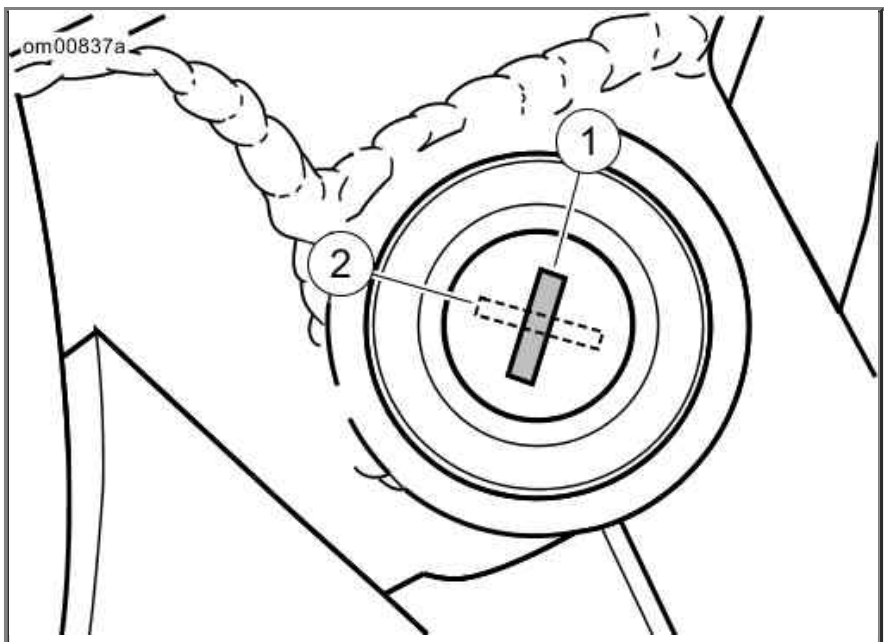

1. Fork locked
2. Fork unlocked

Fork Lock Positions: Sportster Models

Suspension Definitions

Damping: Resistance to velocity of suspension movement. Damping affects how easily the suspension can move and limits oscillations of the system once movement has begun.

Compression: The suspension is compressed when the wheel moves upward (when riding over a bump).

Rebound: The suspension is rebounding when it is moving back from being compressed (rebounding to the road surface after a bump).

Vehicle Sag: The amount the rear shock and fork springs are compressed by the weight of the motorcycle.

Rider Sag: The amount the rear shock and fork springs are compressed by the weight of the rider on the motorcycle.

Preload: An adjustment made to the rear shock and front fork springs to limit vehicle and rider sag to a standard percentage of total suspension travel.

Before evaluating and adjusting suspension settings, check the motorcycle's tires. They must be in good condition and properly inflated. Refer to Specified Tires.

Tool Kit: XR 1200X

A tool pouch is provided with suspension adjustment tools:

- 5 mm hex key (front fork preload adjustment)
- Spanner wrench with extension handle (shock absorber preload adjustment)

General Suspension Adjustment: XR 1200X

The front and rear preload setting will need to be adjusted for the rider's weight and cargo. This adjustment should be made before the motorcycle is ridden any distance and after changing the overall vehicle weight (adding saddlebags, etc.).

Damping is set at the factory for the average solo rider under normal riding conditions. The rider may make adjustments to compensate for individual riding styles and varying road conditions.

Evaluating and changing the rebound and compression damping is a very subjective process with many variables and should be approached carefully.

Changes in Load

Changes in the load carried requires changes in the preload settings. Carrying less weight than was used for setting up the suspension requires decreasing the amount of preload. Increasing the load carried requires adding more preload.

Front Fork: XR 1200X

⚠WARNING

Adjust both forks equally. Improper fork adjustment can lead to loss of control, which could result in death or serious injury. (00124c)

CAUTION

Compression and rebound adjusting valves may be damaged if too much force is used at either end of the adjustment range. (00237a)

Spring Preload

1. See Spring Preload Adjuster: XR 1200X. With a hex key, turn the preload adjuster counterclockwise until it stops. This is the minimum preload setting.
2. Calculate the total load and turn the adjuster clockwise to specification. Refer to Recommended Spring Preload: XR 1200X.

Rebound Damping

1. See Fork Rebound and Compression Damping Adjusters: XR 1200X. Turn the rebound damping adjuster (1) clockwise H (hard) until it stops. This is the maximum rebound setting.
2. Turn adjuster counterclockwise S (soft) to specification. Refer to Recommended Fork

Rebound and Compression Damping Adjustment: XR 1200X.

Compression Damping

1. See Fork Rebound and Compression Damping Adjusters: XR 1200X. Turn the compression damping adjuster (2) clockwise H (hard) until it stops. This is the maximum compression setting.

2. Turn the adjuster counterclockwise S (soft) to specification. Refer to Recommended Fork Rebound and Compression Damping Adjustment: XR 1200X.

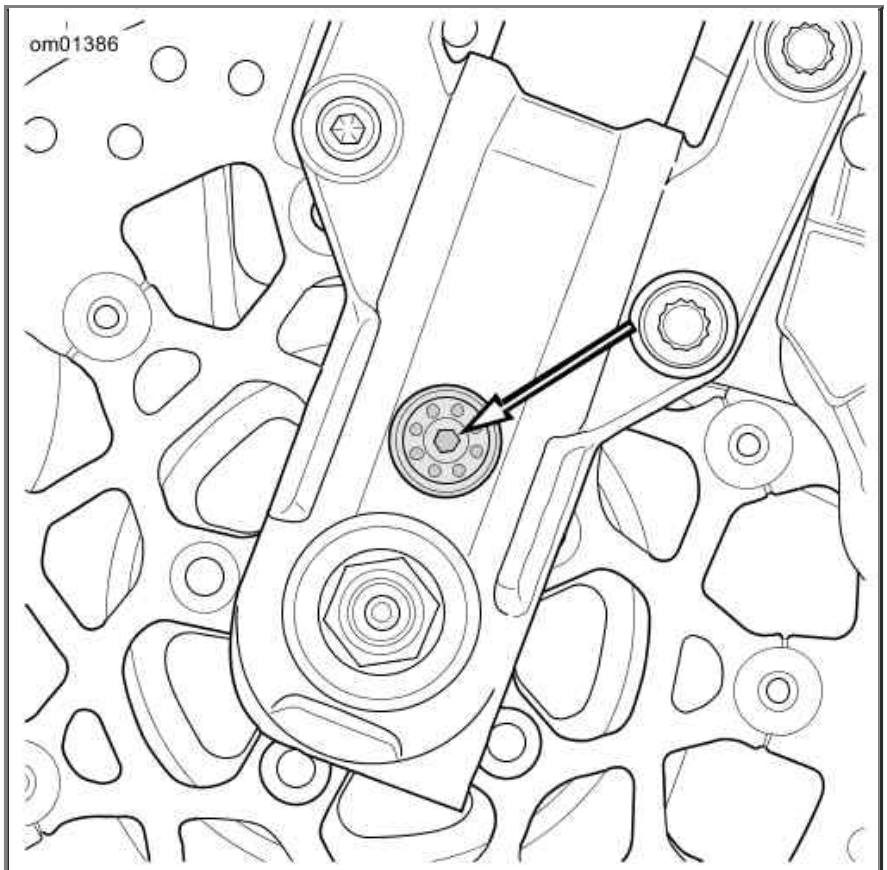

Spring Preload Adjuster: XR 1200X

Recommended Spring Preload: XR 1200X

LOAD*	TURNS** FROM MINIMUM
Less than 165 lb 75.0 kg	0-4
165-195 lb 75.0-89.0 kg	4-6
195-225 lb 89.0-102.0 kg	6-8
225-255 lb 102.0-116.0 kg	8-10
255 lb 116.0 kg to maximum added weight allowed. Refer to Weights: XL 1200 Models and XR 1200X.	More than 10

*Add the weight of the rider, passenger, riding gear, accessories, and cargo.

**Turns are clockwise turns in from minimum.

- To increase preload, turn the adjuster clockwise.
- To decrease preload, turn the adjuster counterclockwise.

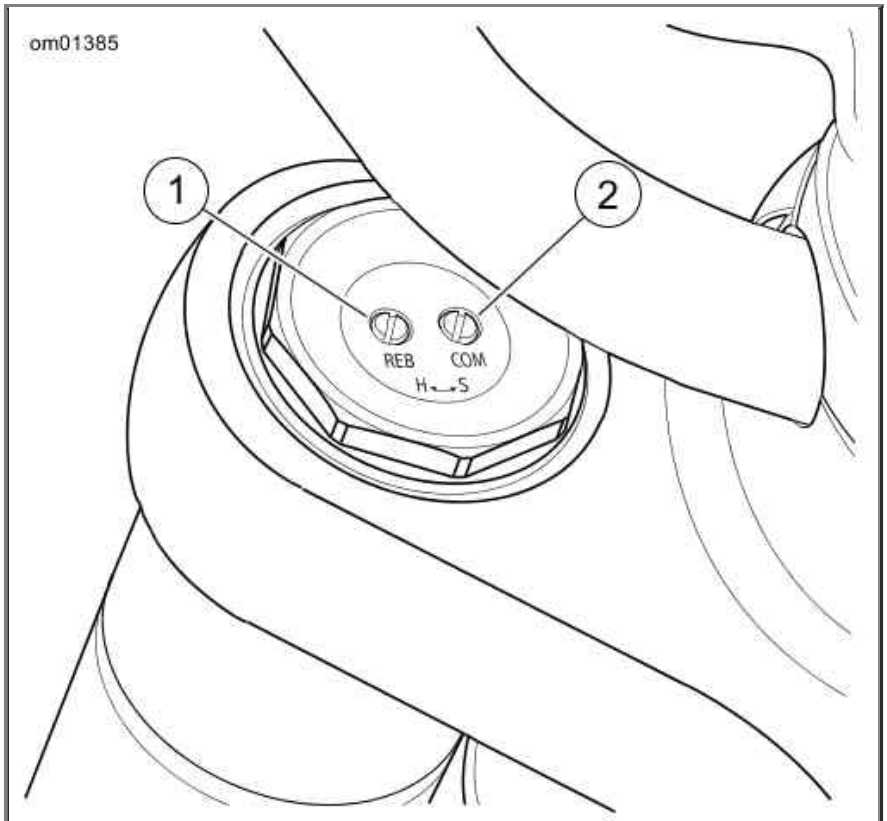

1. Rebound damping adjuster
2. Compression damping adjuster

Fork Rebound and Compression Damping Adjusters: XR 1200X

Recommended Fork Rebound and Compression Damping Adjustment: XR 1200X

DAMPING*	NOMINAL (FROM MAXIMUM)
Rebound (REB)	3
Compression (COM)	5
*Values shown are counterclockwise turns out from maximum. Rotate adjuster clockwise to increase damping or counterclockwise to decrease damping.	

Shock Absorber Preload: All Models

⚠WARNING

Adjust both shock absorbers equally. Improper adjustment can adversely affect stability and handling, which could result in death or serious injury. (00036b)

CAUTION

Do not turn the shock absorber adjustment collar clockwise beyond adjustment setting 5. Doing so may result in equipment damage. (00166b)

NOTES:

- ***Five position shocks:*** *See Shock Preload Cam Positions (typical). Do not turn the*

preload cam past position five (5) to position one (1) or from position one (1) to position five (5).

- ***Three position shocks:*** *Do not turn the preload cam past position three to position one or from position one (1) to position three.*

XL Models: See Shock Absorber Preload Adjustment: XL Models. Using SHOCK ADJUSTMENT SPANNER 94448-82B , turn the adjustment cam to specification.

- **Five position shocks:** Refer to Recommended Shock Preload: Five Position.
- **Three position shocks:** Refer to Recommended Shock Preload: Three Position.

XR 1200X: See Shock Absorber Preload Adjustment: XR 1200X. Use the spanner wrench with extension handle from the tool kit to turn the adjustment cam to specification. Refer to Recommended Shock Preload: Five Position.

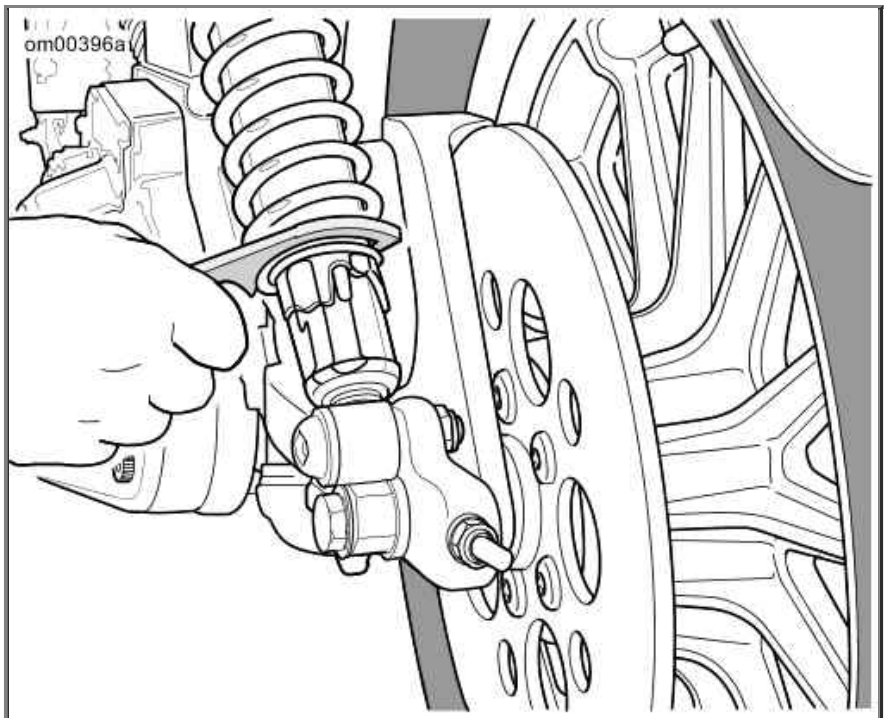

Shock Absorber Preload Adjustment: XL Models

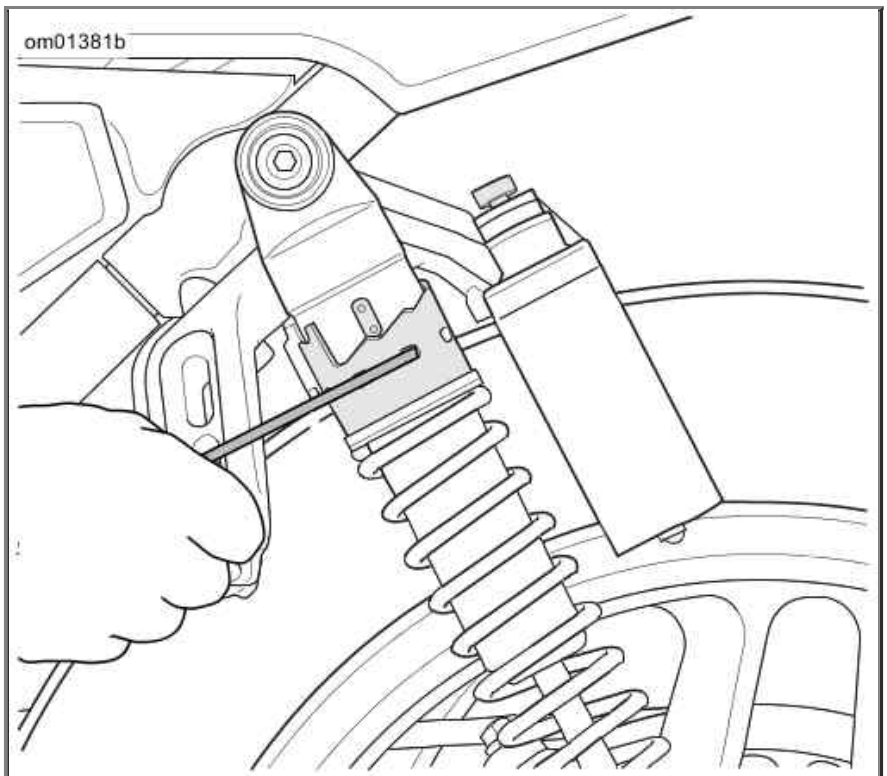

Shock Absorber Preload Adjustment: XR 1200X

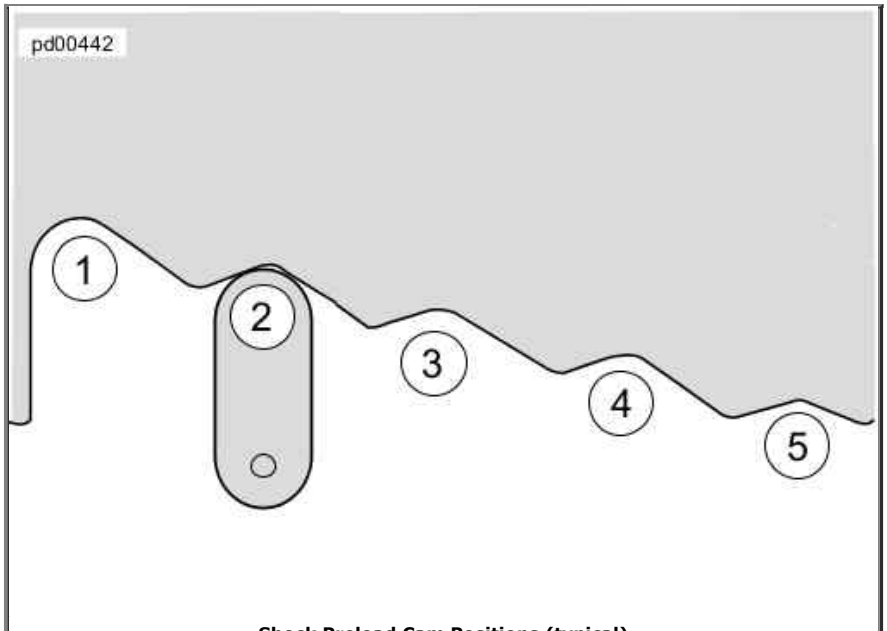

Shock Preload Cam Positions (typical)

XL 883L/N, XL1200X/V and certain XL1200CP models are configured for solo operation. If you choose to add a passenger and/or cargo to the vehicle, the ride quality may be compromised. See a Harley-Davidson dealer for two-up seats, passenger pegs and suspension options.

Recommended Shock Preload: Five Position

LOAD*	POSITION**
Less than 165 lb 75.0 kg	1
165-195 lb 75.0-89.0 kg	2
195-225 lb 89.0-102.0 kg	3
225-255 lb 102.0-116.0 kg	4
255 lb 116.0 kg to maximum added weight allowed. Refer to Weights: XL 883 Models and Weights: XL 1200 Models and XR 1200X.	5
* Add the weight of the rider, passenger, riding gear, accessories, and cargo. ** See Shock Preload Cam Positions (typical).	

Recommended Shock Preload: Three Position

LOAD*	POSITION
Less than 165 lb 75.0 kg	1
165-225 lb 75.0-102.0 kg	2
225 lb 102.0 kg to maximum added weight allowed. Refer to Weights: XL 883 Models and Weights: XL 1200 Models and XR 1200X.	3
* Add the weight of the rider, passenger, riding gear, accessories, and cargo.	

Maximum Added Weight Allowed: Sportster Models

MODEL	MAX LOAD	
	lb	kg
XL 883L	407	184.6

XL 883L	437	198.2
XL 883N	435	197.3
XL 883R	427	193.7
XL 1200C/C ANV/CP	418	189.6
XL 1200CA	427	193.7
XL 1200CB	427	193.7
XL 1200X	433	196.4
XL 1200V	445	201.8
XR 1200X	427	193.7

Shock Absorber Rebound and Compression: XR 1200X

⚠WARNING

Adjust both shock absorbers equally. Improper adjustment can adversely affect stability and handling, which could result in death or serious injury. (00036b)

CAUTION

Compression and rebound adjusting valves may be damaged if too much force is used at either end of the adjustment range. (00237a)

Shock Absorber Rebound Damping Adjustment

1. See Rebound Damping Adjuster: XR 1200X. Turn the rebound adjuster in the direction of the embossed H (hard) until it stops. This is the maximum rebound damping setting.
2. Turn the rebound adjuster toward the embossed S (soft) the recommended number of clicks. Refer to Recommended Rear Shock Rebound and Compression Damping: XR 1200X.

Shock Absorber Compression Damping Adjustment

1. See Compresson Damping Adjuster: XR 1200X. Using fingers, turn the compression adjuster clockwise H (hard) until it stops. This is the maximum compression damping setting.
2. Turn the compression adjuster counterclockwise (H to S) (hard to soft) the recommended number of clicks. Refer to Recommended Rear Shock Rebound and Compression Damping: XR 1200X.

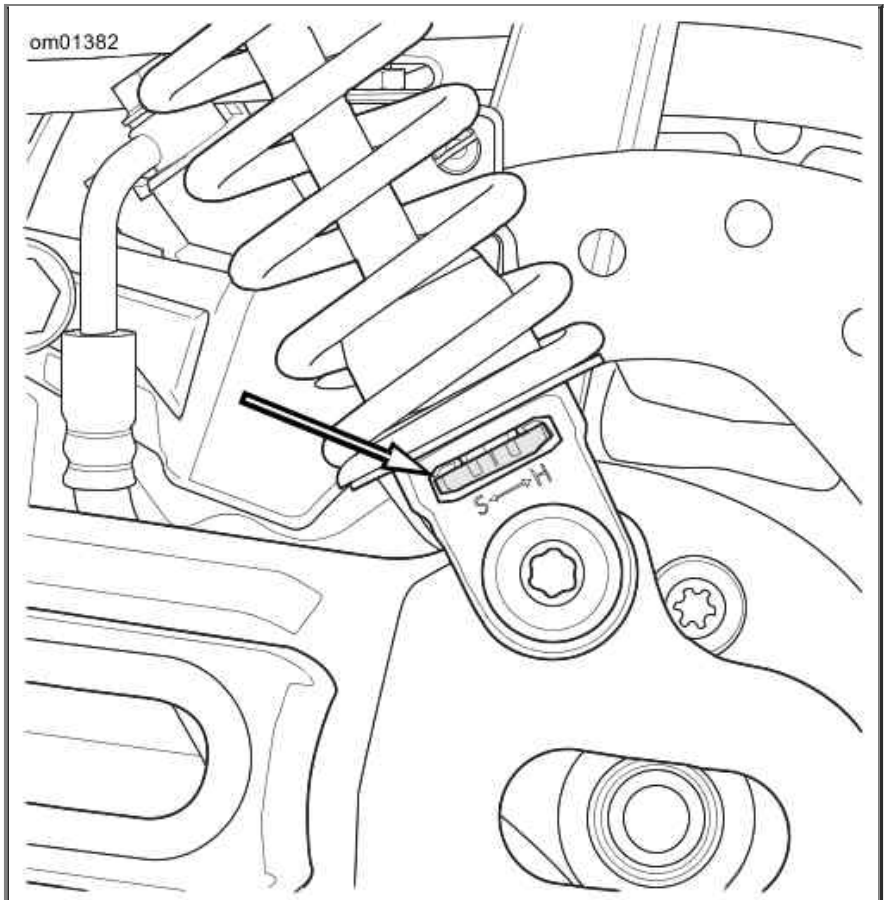

Rebound Damping Adjuster: XR 1200X

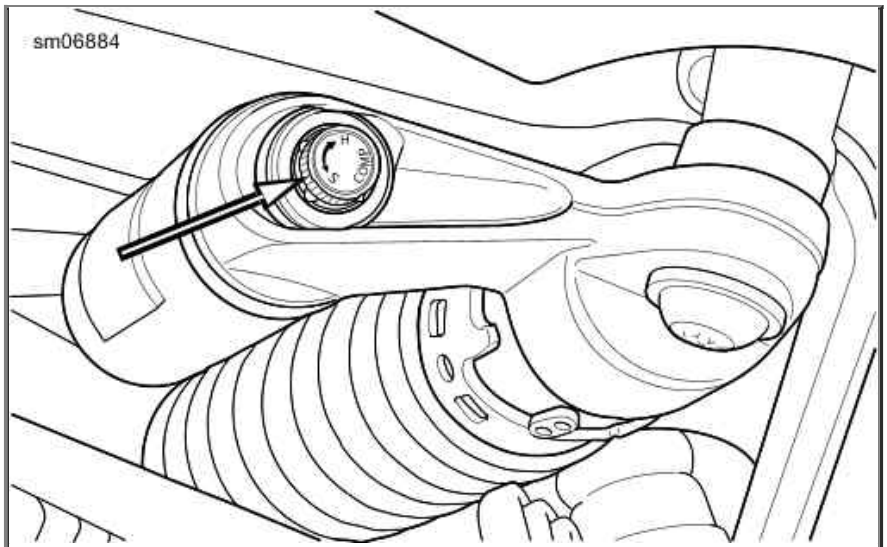

Compresson Damping Adjuster: XR 1200X

Recommended Rear Shock Rebound and Compression Damping: XR 1200X

DAMPING	CLICKS FROM MAX (H to S)
Rebound (REB)	5
Compression (COMP)	7

Suspension Tuning: XR 1200X

After the preload and damping have been set to the recommended settings, additional adjustments can be made to enhance the comfort, control and handling characteristics of the motorcycle. These adjustments may be based on personal riding style, desired ride quality, and

varying road conditions.

1. Set the front forks and shock absorbers to the recommended settings. Properly inflate the tires.
2. Determine the ride quality of the motorcycle. Ride the motorcycle on a familiar road with a variety of bumps and turns. Ride over different surfaces at varying speeds. If the suspension is set properly, the vehicle suspension will feel controlled and comfortable.
3. Adjust the rebound and compression damping according to the motorcycle behavior experienced during the ride. Refer to Suspension Damping Adjustment Guidelines: XR 1200X.
4. After adjusting the suspension, ride the motorcycle again to check for comfort and response.

NOTE:

When tuning the suspension, make all adjustments in small increments. Radical setting changes may overshoot the best adjustment setting.

Suspension Damping Adjustment Guidelines: XR 1200X

MOTORCYCLE BEHAVIOR	SUGGESTED REMEDY
Soft or unsettled feeling around corners or after bumps	Increase rebound damping.
Leaping feeling or topping after large bumps	Increase rebound damping.
Harsh/sharp feedback over bumps	Decrease rebound damping.
Feels like motorcycle drops down over chatter bumps	Decrease rebound damping.
Excessive bottoming through potholes	Increase compression damping.
Excessive dive when applying front brake	Increase compression damping (forks).
Hard feeling or inadequate absorption over bumps	Decrease compression damping.
Feels excessively stiff or busy around corners	Decrease compression damping.

Side-Mounted License Plate

See Side-Mounted License Plate Assembly. Some models are equipped with a side-mounted license plate assembly. The license plate must be in the extended position during operation. Due to local regulations, this feature may not be available in all locations.

The side-mounted license plate assembly includes an LED lamp module. If the LED lamp fails, see a Harley-Davidson dealer for assembly replacement.

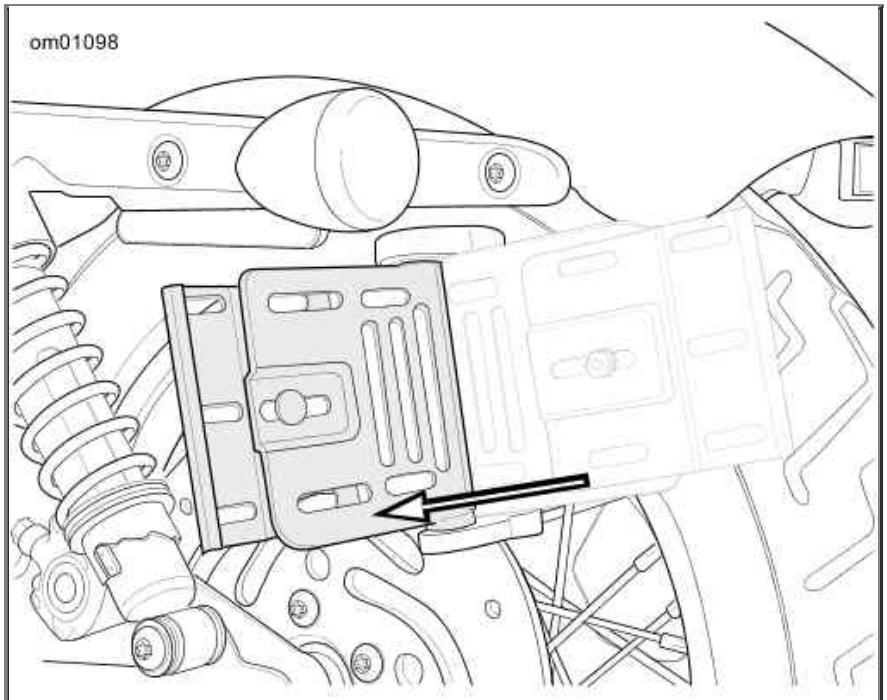

Side-Mounted License Plate Assembly

Harley-Davidson Smart Security System

Harley-Davidson Smart Security System

Components

The Harley-Davidson Smart Security System (H-DSSS) consists of a Hands-Free Security Module (HFSM) and a hands-free antenna mounted on the motorcycle, and a hands-free fob carried by the rider/passenger.

After parking the motorcycle, turn the ignition key to OFF or ACC and the Smart Security System will automatically **arm** within five seconds. While armed, the starter and ignition are disabled and the rider may leave the motorcycle knowing that the module will activate an alarm if someone tampers with the ignition or attempts to move the motorcycle.

If the fob is present, the module will automatically **disarm** when the ignition key is turned to IGNITION or ACC.

NOTES:

- *If disconnecting power from the motorcycle battery, see Disconnecting Power to prevent the optional security system siren from sounding.*
- *Do not relocate the module or the antenna on the motorcycle.*

Options

Several options are available for the Harley-Davidson Smart Security System from the Harley-Davidson Genuine Motor Accessories and Motor Parts catalog. Options include:

- Smart Siren II.
- Security Pager Receiver II.
- Replacement Fobs.

See a Harley-Davidson dealer for details.

FCC Regulations

FCC ID: L2C0027TR IC ID: 3432A-0027TR

FCC ID: L2C0028TR IC ID: 3432A-0028TR

This device complies with Part 15 of the FCC Rules and with RSS-210 of Industry Canada rules. Operation is subject to the following two conditions:

(1) This device may not cause harmful interference, and (2) This device must accept any interference received, including interference that may cause undesired operation.

NOTE:

Changes or modifications not expressively approved by the party responsible for compliance could void the user's authority to operate the equipment.

The term "IC:" before the radio certification number only signifies that Industry Canada technical specifications were met.

Security System Fob

Fob Assignment

See Fob: Smart Security System. Key fobs are electronically assigned to the Harley-Davidson Smart Security System by a Harley-Davidson dealer so that the motorcycle can recognize a fob's unique signal. Only two fobs can be assigned at any one time.

Replacement fobs can be purchased from a dealership but can only be assigned to the motorcycle by a trained Harley-Davidson technician.

NOTES:

- *The reusable label found on the fob packaging lists the serial number of the fob. For reference, affix the label to a blank "NOTES" page in this Owner's Manual.*
- *The serial number of the fob is also found on the inside of the fob. See Fob Battery.*
- *The module will arm only if the fob has been assigned by a Harley-Davidson dealer and a Personal Identification Number (PIN) has been entered in the system. The PIN should be recorded on the Personal Information page in the front of this Owner's Manual and on the removable wallet card.*
- *Should the rider misplace the fob or if the fob fails, the rider can refer to the wallet card and use the PIN to manually disarm the system. Refer to Arming and Disarming and Fob Battery.*
- *The PIN can easily be changed by the rider at any time. Refer to Personal Identification Number (PIN).*

Riding with a Fob

- Always carry the fob when riding, loading, fueling, moving, parking or servicing the motorcycle. Carry the fob in a convenient pocket.
- Do not leave the fob attached to the handlebars or store the fob in a luggage compartment. Unintentionally leaving the fob with the motorcycle when it is parked prevents the system from activating the alarm.
- Do not ride with the fob stored in a metal case or with the fob closer than 3.0 in 76 mm to a cell phone, PDA, display or other electronic device. Any electromagnetic interference may prevent the fob from disarming the system.
- For added security, always lock the fork and remove the key when parked. If the fob is within range and the motorcycle is unlocked, tampering with the motorcycle will not activate the alarm.

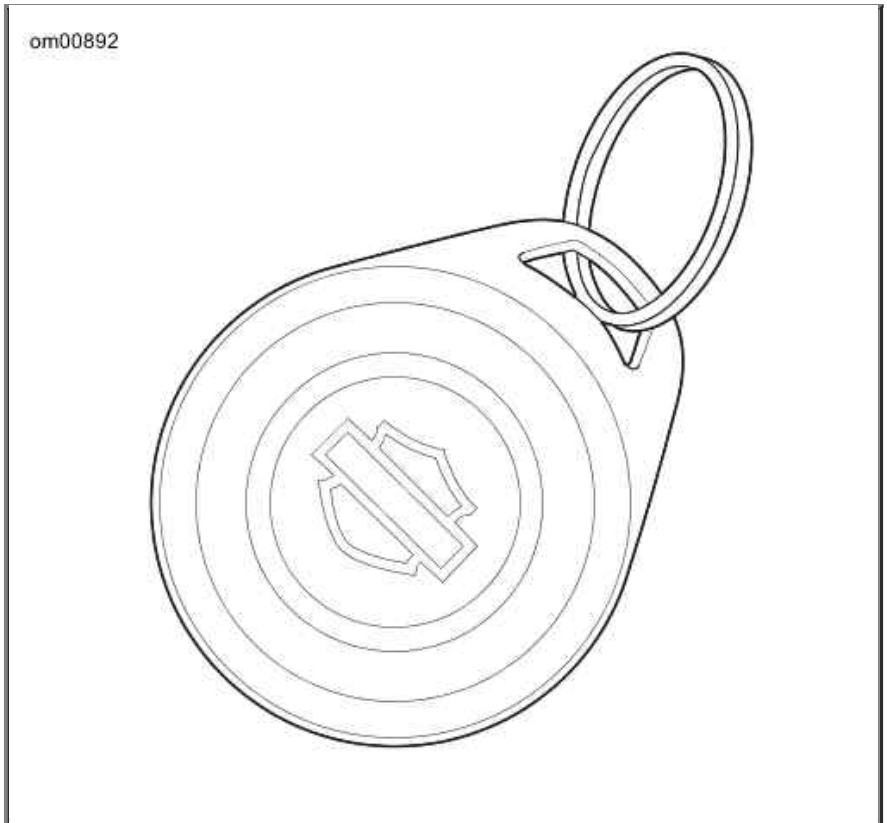

Fob: Smart Security System

Personal Identification Number (PIN)

The Personal Identification Number (PIN) is a number that can be used to disarm the Harley-Davidson Smart Security System in case an assigned fob is misplaced, fails or if the fob cannot communicate with the motorcycle because of electromagnetic interference.

A PIN is a five-digit number (1-9, no zeros).

Changing the PIN

To maintain security, the rider can change the PIN at any time. Refer to Changing the PIN.

Changing the PIN

STEP NO.	ACTION	WAIT FOR CONFIRMATION	NOTES
1	Select a 5-digit (1 thru 9) PIN and record on the wallet card from Owner's Manual.		
2	With an assigned fob present, turn the ignition switch **IGNITION**-OFF-**IGNITION**-OFF-**IGNITION.**		
3	Press **left** turn signal switch **3 times**.		
4	Press **right** turn signal switch **1 time** and release.	Turn signals will flash 3 times. Current PIN will appear in odometer. The first digit will be flashing.	See Odometer Windows - PIN.
5	Enter first digit (a) of new PIN by pressing **left** turn signal switch **a** times.		
6	Press **right** turn signal switch **1**	The new digit (a) will replace the	

	time and release.	current in odometer window.	
7	Enter second digit (b) of new PIN by pressing **left** turn signal switch **b** times.		
8	Press **right** turn signal switch **1 time** and release.	The new digit (b) will replace the current in odometer window.	
9	Enter third digit (c) of new PIN by pressing **left** turn signal switch **c** times.		
10	Press **right** turn switch **1 time** and release.	The new digit (c) will replace the current in odometer window.	
11	Enter fourth digit (d) of new PIN by pressing **left** turn signal switch **d** times.		
12	Press **right** turn switch **1 time** and release.	The new digit (d) will replace the current in odometer window.	
13	Enter fifth digit (e) of new PIN by pressing **left** turn signal switch **e** times.		
14	Press **right** turn switch **1 time** and release.	The new digit (e) will replace the current in odometer window.	
15	Before the module rearms, turn the ignition switch to **OFF**.	The odometer will return to mileage.	Turning the ignition switch to **OFF** stores the new PIN in the module.

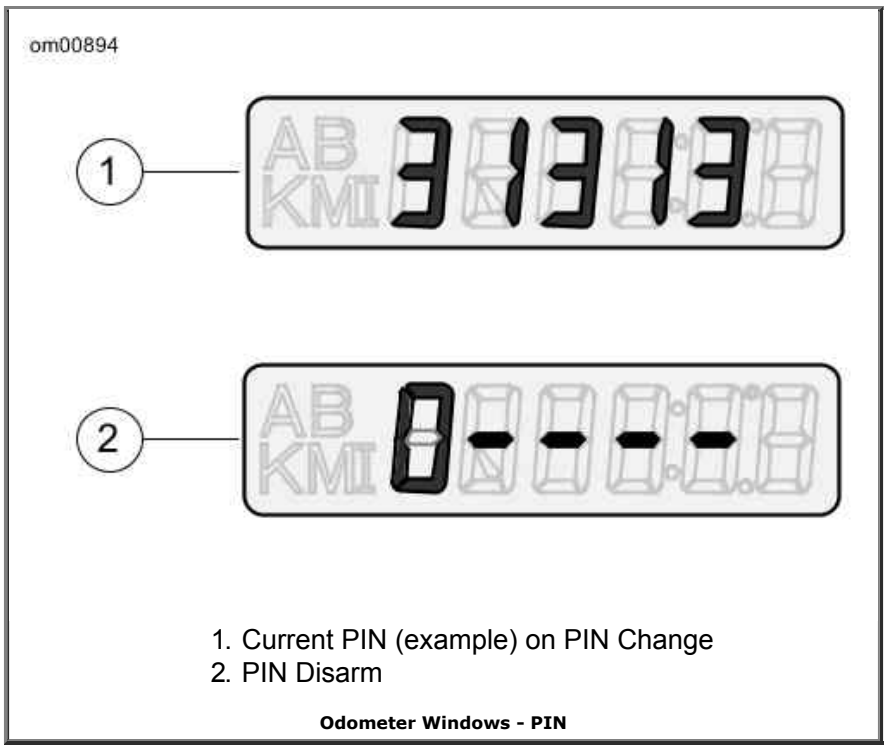

1. Current PIN (example) on PIN Change
2. PIN Disarm

Odometer Windows - PIN

Security Status Indicator

See Instruments: XL Models. The security system lamp in the speedometer face indicates the status of the Harley-Davidson Smart Security System.

- **Armed:** A lamp that blinks approximately every 3 seconds indicates that the system is armed.
- **Disarmed:** After the system disarms and the ignition is on, the lamp will remain illuminated for approximately four seconds and then turn off.

- **Service:** A lamp that remains illuminated longer than four seconds while the system is disarmed indicates that the module needs servicing.

Arming and Disarming

Arming

When the motorcycle is parked and the ignition key is turned to OFF, the security system arms automatically within five seconds if no motion is detected. Even when the fob is present, the system will arm.

On arming, the turn signals will flash twice and the optional siren will chirp twice. While armed, the key icon in the speedometer face will flash every three seconds.

NOTE:

International Models: *The HFSM must be in the Chirp Mode for the siren to chirp on arming or on disarming. See Siren Chirp Mode (Confirmation).*

Disarming

Once disarmed, the rider may ride or move the motorcycle for parking, storage or service without setting off the alarm.

Fob: An armed security system is automatically disarmed when the ignition key is turned to IGNITION with the fob present.

When the module disarms, the optional siren will chirp once and the key icon will illuminate for a solid four seconds and then turn off.

NOTE:

Any motion, like lifting the motorcycle up off of its jiffy stand, or turning the ignition key to IGNITION and the module will electronically search for the presence of the fob. If the fob is present, the system disarms.

Personal Identification Number (PIN): If the fob is misplaced or if the present fob fails to communicate with the module, the system can be disarmed with the Personal Identification Number (PIN).

Disarming with a PIN

Do not turn handlebars, straddle seat or lift motorcycle off the jiffy stand. During a PIN disarm, if the security system detects motorcycle motion the system will activate the alarm.

NOTES:

- *At any time during a PIN disarm, if the fob is brought within range of the motorcycle, the security system will disarm when the module receives the coded signal from the fob.*
- *If a mistake is made while entering PIN, wait two minutes before another disarming attempt.*
- *The security system will remain disarmed until the ignition key is turned to OFF.*

Entering a PIN to Disarm Harley-Davidson Smart Security System

STEP NO.	ACTION	WAIT FOR CONFIRMATION	NOTES
1	If necessary, verify the current 5-digit PIN.		Should be recorded on wallet card.
2	Turn ignition switch to **IGNITION**.		
3	Quickly (within 2 seconds of	Key icon flashes at fast rate. In	See Odometer

	turning ignition switch) hold **both** turn signal switches in until confirmation.	the odometer window, a flashing dash will be followed by four more dashes.	Windows - PIN. Five dashes will appear in the odometer window.
4	Enter first digit (**a**) in the PIN by pressing **left** turn switch **a times.**	The first digit (**a**) in the odometer will be the first digit in the PIN.	
5	Press **right** turn switch **1 time.**	The first digit is stored and the dash will flash.	Serves as enter key.
6	Enter second digit (**b**) in the PIN by pressing **left** turn switch **b times.**	The second digit (**b**) in the odometer will be the second digit in the PIN.	
7	Press **right** turn switch **1 time.**	The second digit is stored and the next dash will flash.	Serves as enter key.
8	Enter third digit (**c**) in the PIN by pressing **left** turn switch **c times.**	The third digit (**c**) in the odometer will be the third digit in the PIN.	
9	Press **right** turn switch **1 time**.	The third digit is stored and the next dash will flash.	Serves as enter key.
10	Enter fourth digit (**d**) in the PIN by pressing **left** turn switch **d times**.	The fourth digit (**d**) in the odometer will be the fourth digit in the PIN.	
11	Press **right** turn switch **1 time.**	The fourth digit is stored and the next dash will flash.	Serves as enter key.
12	Enter fifth digit (**e**) in the PIN by pressing **left** turn switch **e times.**	The fifth digit (**e**) in the odometer will be the fifth digit in the PIN.	
13	Press **right** turn switch **1 time**.	The fifth digit is stored. The key icon stops blinking.	Smart Security System is disarmed.

Alarm

Warnings

Once armed, if the motorcycle is moved or lifted up off of its jiffy stand or if the ignition switch is turned to IGNITION and the fob is not present, the alarm will warn the operator with three alternate flashes of the turn signals and a chirp of the optional siren.

Within four seconds, if the motorcycle is back on its jiffy stand and no further motion is detected and/or the ignition switch is turned to OFF, the module will remain armed without activating the alarm.

If the motorcycle motion continues or the ignition switch is not turned back to OFF, the module will issue a second warning four seconds after the first.

NOTE:

During warnings and alarms, the starter motor and the ignition circuits are disabled.

The Alarm

If the Smart Security System is still detecting motion and/or if the ignition switch has not been turned back to OFF after a second warning, the system will activate the alarm.

When activated, the Smart Security System will:

- Alternately flash the four turn signals.
- Sound the optional siren.

Duration: The alarm will stop within 30 seconds and if no motion is detected, the alarm will not restart.

However, if motorcycle motion continues the system will repeat the 30 second alarm and recheck for motion. The alarm will repeat this 30 second alarm cycle for five minutes (10 cycles) or until the alarm is deactivated.

NOTE:

The alarm will also activate the LED, vibration or audible modes of a Harley-Davidson Security Pager. A pager can operate either in silent or in combination with an optional Smart Siren. The range of a pager can be up to 0.5 mi 0.8 km . See a Harley-Davidson dealer for details.

Deactivate the Alarm

Key Fob: Bring the fob to the motorcycle. After the module identifies that the fob is present, the system will terminate the alarm.

Siren Chirp Mode (Confirmation)

Chirp Mode

In chirp mode, the siren sounds two chirps when arming, and a single chirp when disarming.

Chirpless Mode

In chirpless mode, the siren does not chirp on arming or disarming.

The siren will still provide warning chirps and sound the alarm if the motorcycle is moved or the ignition switch is turned on without the fob present.

Switching Modes

Perform the following to switch between chirp and chirpless modes.

1. With the fob present, turn the ignition switch ON.
2. When the security lamp turns off, turn the ignition switch OFF.
3. When the security lamp turns off (but before the turn signals flash twice), immediately turn the ignition switch ON.
4. When the security lamp turns off, immediately turn the ignition switch OFF.
5. When the security lamp turns off (but before the turn signals flash twice), immediately turn the ignition switch ON.
6. When the security lamp turns off, immediately turn the ignition switch OFF.
7. When the security lamp turns off (but before the turn signals flash twice), immediately turn the ignition switch ON.

Transport Mode

It is possible to arm the security system without enabling the motion detector for one ignition cycle. This allows the vehicle to be picked up and moved in an armed state, however, any attempt to start the engine when the key fob is not within range will trigger the alarm.

To Enter Transport Mode

1. Turn the ignition switch to IGN.
2. Set the engine stop switch to OFF.
3. With an assigned fob within range, turn the ignition switch from IGN to ACC.
4. Simultaneously press both the left and the right turn signal switches. This must be done within five seconds of turning the ignition switch to ACC.
5. After the turn signals flash once, turn the ignition switch to OFF and the module is armed.
6. **Confirmation:** Turn signal blinks three times when armed for one ignition cycle.

To Exit Transport Mode

Return the system to normal operation:

With the fob present, turn the ignition switch to IGN to disarm the system. To cancel the transport mode, set the engine stop switch to RUN.

Storage and Service Departments

Long-Term Parking

To maintain arming, store the fob beyond the range of the antenna - more than 20 ft 6 m away. If the motorcycle is to be moved while parked, have the fob present.

If the motorcycle will not be operated for several months, such as during the winter season, refer to Motorcycle Storage.

Service Departments

When the motorcycle is to be left at a Harley-Davidson dealer, there are two options:

1. Leave an assigned fob with the dealer.
2. To maintain possession of the fob, ask the dealer to disable the system for service (service mode) before leaving the dealership.

Fob Battery

Replacing the Battery

Replace the fob battery every year.

1. See Fob Battery. Slowly turn a thin blade in the thumbnail slot (1) on the side of the fob to separate the two halves.
2. Remove the battery (2) and discard.

   NOTE:

   Dispose of the old battery in accordance with local regulations.
3. Install a **new** battery (Panasonic 2032 or equivalent) with the positive (+) side down.
4. Align the two halves of the fob and snap together.

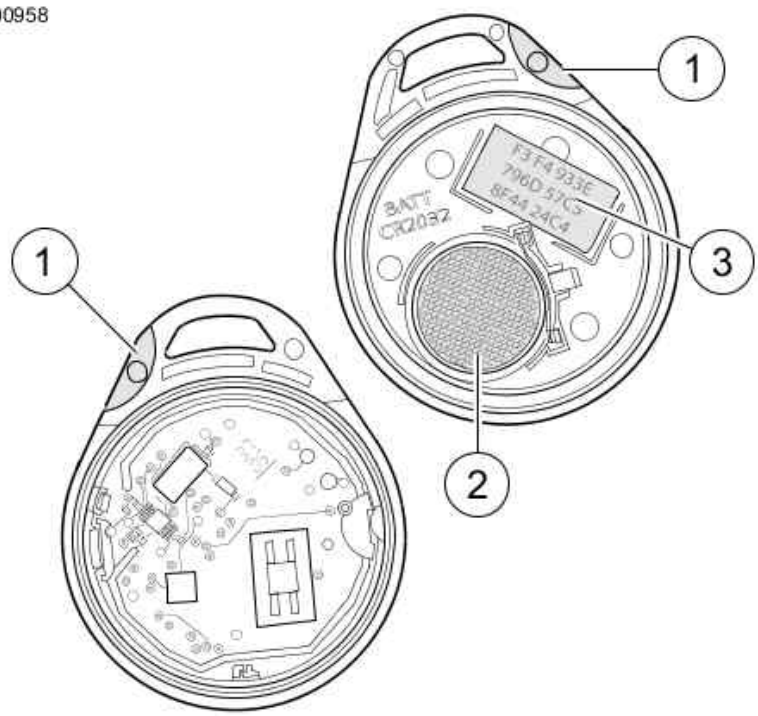

1. Thumbnail slot
2. Battery
3. Fob serial number

Fob Battery

Disconnecting Power

Siren Equipped Models

When disconnecting the battery or removing the main fuse, perform the following steps to prevent the optional siren from sounding.

1. Verify that the fob is present.
2. Turn the ignition switch to IGNITION.
3. Pull the main fuse from its holder or disconnect the battery.

Troubleshooting

Security System Indicator

If the system indicator lamp stays illuminated while riding, see a Harley-Davidson dealer.

Fob

If the Smart Security System continues to actuate warnings and alarms with the fob present, one of the following can be the cause:

1. **Electromagnetic interference:** Other electronic devices, power lines, or other electromagnetic sources can cause the Smart Security System to operate inconsistently.
    a. Verify that the fob is not in a metal enclosure or within 3.0 in 76 mm of any other electronic devices.
    b. Place the fob on the seat and turn the ignition to IGN. After the system disarms, return

the fob to a convenient location.

c. Move motorcycle at least 15 ft 5 m from the spot of interference.

d. Use the PIN to disarm the system.

NOTE:

Leaving a fob next to a computer monitor can run down the battery.

2. **Discharged fob battery:** Use the PIN to disarm the system. Replace the battery. Refer to Fob Battery.

3. **A damaged fob:** Use the PIN to disarm the motorcycle. Replacement fobs are available for purchase from a Harley-Davidson dealer.

Siren

- If the siren does not chirp two or three times on a valid arming command from the security module, the siren is either in the Chirpless Mode, not connected, not working, or the siren wiring was opened or shorted while the siren was disarmed.
- If the siren is armed and the internal siren battery is dead, shorted, disconnected, or has been charging for a period longer than 24 hours, the siren will respond with three chirps on arming instead of two.
- The internal siren battery may not charge if the vehicle's battery is less than 12.5 volts.
- If the siren enters the self-driven mode where it is powered from the siren's internal 9 volt battery, the turn signal lamps may or may not alternately flash. If the security module activates the siren, the turn signal lamps will alternately flash. If the siren has been armed and a security event occurs, and the siren is in self-driven mode, the siren will alarm for 20-30 seconds and then turn off for 5-10 seconds. This alarm cycle will be repeated ten times if the siren is in the self-driven mode.

Operation

Operating Recommendations

⚠WARNING

Motorcycles are different from other vehicles. They operate, steer, handle and brake differently. Unskilled or improper use could result in loss of control, death or serious injury. (00556c)

- Take a rider training course.
- Read Owner's Manual before riding, adding accessories or servicing.
- Wear a helmet, eye protection and protective clothing.
- Never tow a trailer.

CAUTION

Do not run the engine at extremely high RPM with clutch disengaged or transmission in neutral. Running an engine at high RPM can result in engine damage. (00177a)

CAUTION

Do not exceed the maximum safe RPM specified below under any conditions. Exceeding the maximum safe engine RPM can result in equipment damage. (00248a)

- The maximum recommended safe engine speed is 6000 rpm for XL models and 6800 rpm for the XR 1200X.
- Do not idle engine unnecessarily for more than a few minutes with motorcycle standing still.

If motorcycle will not be ridden for a period of two weeks or more with security system armed, it is recommended to connect a 750mA SUPERSMART BATTERY TENDER 94654-98B to maintain battery charge. If security system will not be armed, it is recommended that the 30 A maxi-fuse be removed. See Fuses and Relays.

CAUTION

Air-cooled engines require air movement over the cylinders and heads to maintain proper operating temperature. Extended periods of idling or parade duty can overheat the engine, resulting in serious engine damage. (00178a)

An engine running long distances at high speed must be given closer than ordinary attention to avoid overheating and possible engine damage.

NOTE:

Have the engine checked regularly and keep it well tuned.

This applies particularly to a motorcycle equipped with windshield and fairing.

⚠WARNING

When riding on wet roads, brake efficiency and traction are greatly reduced. Failure to use care when braking, accelerating or turning on wet roads can cause loss of control, which could result in death or serious injury. (00041a)

NOTE:

When descending upon a long, steep grade, downshift and use engine compression together with intermittent application of both brakes to slow the motorcycle.

⚠WARNING

Continuous use of brake causes overheating and reduced efficiency, which could result in death or serious injury. (00042a)

⚠WARNING

Do not tow a disabled motorcycle. Towing can adversely affect stability and handling, which could result in death or serious injury. (00017a)

Break-in Riding Rules

The First 500 Miles (800 Kilometers)

The sound design, quality materials, and workmanship that are built into your new Harley-Davidson will give you optimum performance right from the start.

To allow your engine to wear-in its critical parts, we recommend that you observe the riding rules provided below for the first 500 mi 800 km .

1. During the first 50 mi 80 km of riding, keep the engine speed below 3000 rpm in any gear. Do not lug the engine by running or accelerating at very low rpm, or by running at high rpm longer than needed for shifting or passing.

2. Up to 500 mi 800 km , vary the engine speed and avoid operating at any steady engine speed for long periods. Engine speed up to 3500 rpm in any gear is permissible.

3. Drive slowly and avoid fast starts at wide open throttle until the engine has warmed up.

4. Avoid lugging the engine by not running the engine at very low speeds in higher gears.

5. Avoid hard braking. Break-in new brakes with moderate use for the first 100 mi 160 km .

Pre-Riding Checklist

⚠WARNING

Read the CONTROLS AND INDICATORS section before riding your motorcycle. Failure to understand the operation of the motorcycle could result in death or serious injury. (00043a)

Before riding your motorcycle at any time, make a general inspection to be sure it is in safe riding condition.

⚠WARNING

Stop the engine when refueling or servicing the fuel system. Do not smoke or allow open flame or sparks near gasoline. Gasoline is extremely flammable and highly explosive, which could result in death or serious injury. (00002a)

⚠WARNING

Avoid spills. Slowly remove filler cap. Do not fill above bottom of filler neck insert, leaving air space for fuel expansion. Secure filler cap after refueling. Gasoline is extremely flammable and highly explosive, which could result in death or serious injury. (00028a)

⚠WARNING

Use care when refueling. Pressurized air in fuel tank can force gasoline to escape through filler tube. Gasoline is extremely flammable and highly explosive, which could result in death or serious injury. (00029a)

1. Verify fuel is present in tank and add fuel if required.

2. Adjust mirrors to proper riding positions.

3. Check the oil level. Add oil if necessary.

4. Check controls to make sure they operate properly. Operate the front and rear brakes, throttle, clutch and shifter. All controls should operate freely without binding.

5. Check steering for proper operation by turning the handlebars through the full operating range. Handlebars should turn smoothly without binding.

⚠WARNING

Be sure tires are properly inflated, balanced, undamaged, and have adequate tread. Inspect your tires regularly and see a Harley-Davidson dealer for replacements. Riding with excessively worn, unbalanced, improperly inflated, overloaded or damaged tires can lead to tire failure and adversely affect stability and handling, which could result in death or serious injury. (00014b)

6. Check tire condition, pressure and motorcycle loading. Incorrect pressure and excessive loading can lead to tire or wheel failure, and can affect handling and stability. Refer to Specified Tires for correct inflation pressure.

⚠WARNING

Be sure headlamp, tail and stop lamp and turn signals are operating properly before riding. Poor visibility of rider to other motorists can result in death or serious injury. (00478b)

7. Check all electrical equipment and switches including the headlamp, stop lamp, turn signals and horn for proper operation.
8. Check for any fuel, oil or hydraulic fluid leaks.
9. Visually check drive belt for wear or damage.
10. Service your motorcycle as necessary.

Starting the Engine

⚠WARNING

Shift transmission to neutral before starting engine to prevent accidental movement, which could result in death or serious injury. (00044a)

CAUTION

The engine should be allowed to run slowly for 15-30 seconds. This will allow the engine to warm up and let oil reach all surfaces needing lubrication. Failure to comply can result in engine damage. (00563b)

NOTE:

Do not open the throttle before starting the engine.

1. Turn ignition key to IGNITION.
2. See Handlebar Controls. Switch the OFF/RUN switch to the RUN position.

   NOTE:

   The engine lamp will light for approximately 4 seconds. You will hear the fuel pump purr for approximately 2 seconds as it operates to fill the fuel lines with gasoline.

3. Verify transmission is in NEUTRAL position by observing the lit green neutral indicator lamp on the dash panel and verify neutral position by rolling motorcycle forward and rearward.
4. Squeeze the clutch lever against the handlebar.

5. Press the START button.

6. When the engine has started, you can operate your motorcycle as you normally would after raising the jiffy stand.

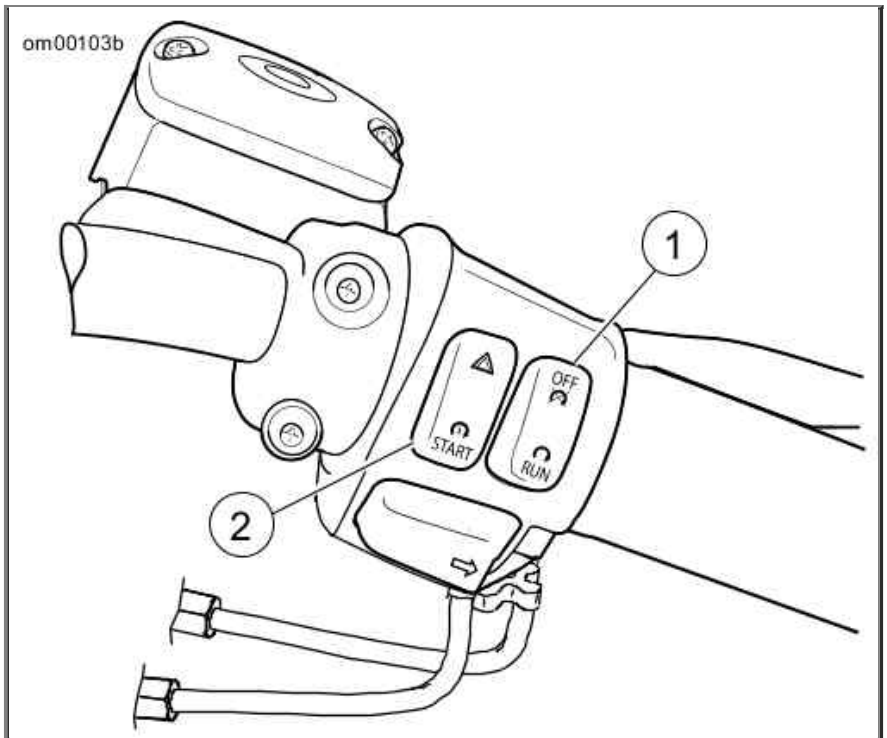

1. Engine OFF/RUN switch
2. Engine START switch

Right Handlebar Controls

Shifting Gears

Stopped, Engine Off

Squeeze in the clutch lever to fully disengage the clutch. Gears may not engage because the transmission shafts are not turning and shifter components are not lined up. Rock the motorcycle backward and forward while lightly pressing on the shift lever.

Starting from a Stop

CAUTION

The clutch must be fully disengaged before attempting a gear shift. Failure to fully disengage the clutch can result in equipment damage. (00182a)

NOTE:

Always start the engine with the transmission in neutral. Always start forward motion in first gear.

1. With the engine running and the jiffy stand retracted, pull the clutch hand lever in against the handlebar grip to fully disengage the clutch.

2. Press the gear shift lever down to end of its travel and release. The transmission is now in first gear.

3. Ease out the clutch lever and at the same time, gradually open the throttle.

Upshift (Acceleration)

See Upshift Sequence: Sportster Models. Engage the next higher gear when the motorcycle reaches the shifting speed. Refer to Upshift (Acceleration) Road Speeds*.

Upshift (Acceleration) Road Speeds*

GEAR CHANGE	mph	km/h
First to second	15	25
Second to third	25	40
Third to fourth	35	55
Fourth to fifth	45	70
* The listed speeds are recommendations. Individual riding styles may determine gear change road speeds.		

1. Close the throttle.
2. Disengage the clutch (pull the clutch lever in).
3. Lift the gear shift lever up to the end of its travel and release.
4. Ease out the clutch lever and gradually open the throttle.
5. Repeat the previous steps to engage remaining gears.

NOTES:

- *Disengage the clutch completely before each gear change.*
- *Partially open the throttle so the engine does not drag when the clutch lever is released.*

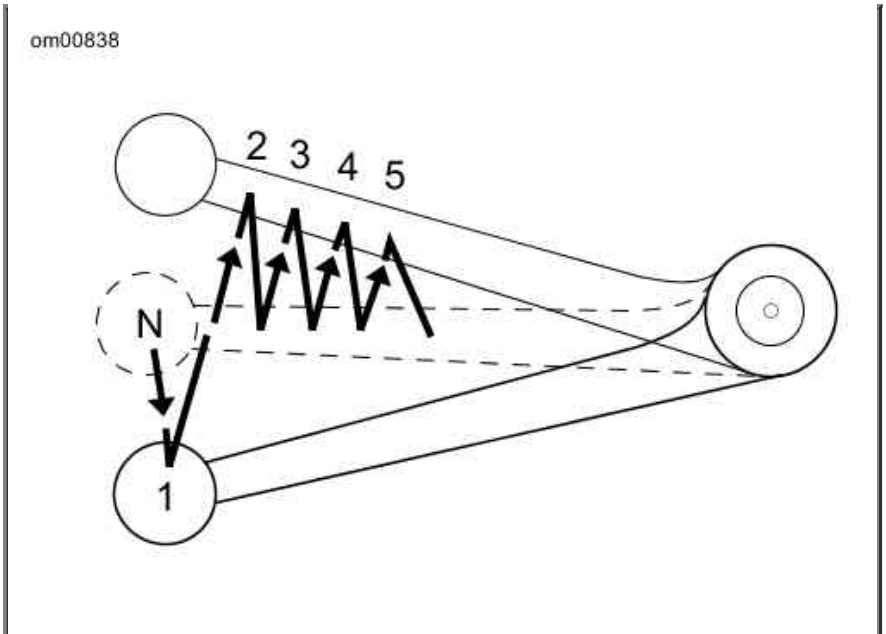

Upshift Sequence: Sportster Models

Downshift (Deceleration)

⚠WARNING

Do not downshift at speeds higher than those listed. Shifting to lower gears when speed is too high can cause the rear wheel to lose traction and lead to loss of vehicle control, which could result in death or serious injury. (00045b)

See Downshift Sequence: Sportster Models. When engine speed decreases, as when climbing a hill or slowing for a turn, shift to the next lower gear. Refer to Downshift (Deceleration) Road Speeds*.

Downshift (Deceleration) Road Speeds*

GEAR CHANGE	mph	km/h
Fifth to fourth	40	65
Fourth to third	30	50
Third to second	20	30
Second to first	10	15
* The listed speeds are recommendations. Individual riding styles may determine gear change road speeds.		

NOTE:

The shifting points shown in the table are recommendations. Vehicle owners may determine that their own individual shifting patterns may differ from those stated and are additionally appropriate for individual riding styles.

1. Close the throttle.
2. Disengage the clutch (pull the clutch lever in).
3. Press the gear shift lever down to the end of its travel and release.
4. Ease out the clutch lever and gradually open the throttle.
5. Repeat the previous steps to engage remaining gears.

NOTES:

- *Disengage the clutch completely before each gear change.*
- *Partially open the throttle so the engine does not drag when clutch lever is released.*

CAUTION

Shift to neutral before stopping engine. Shifting mechanism can be damaged by shifting gears while engine is stopped. (00183a)

The gear shifter mechanism permits shifting the transmission to neutral from either first or second gear.

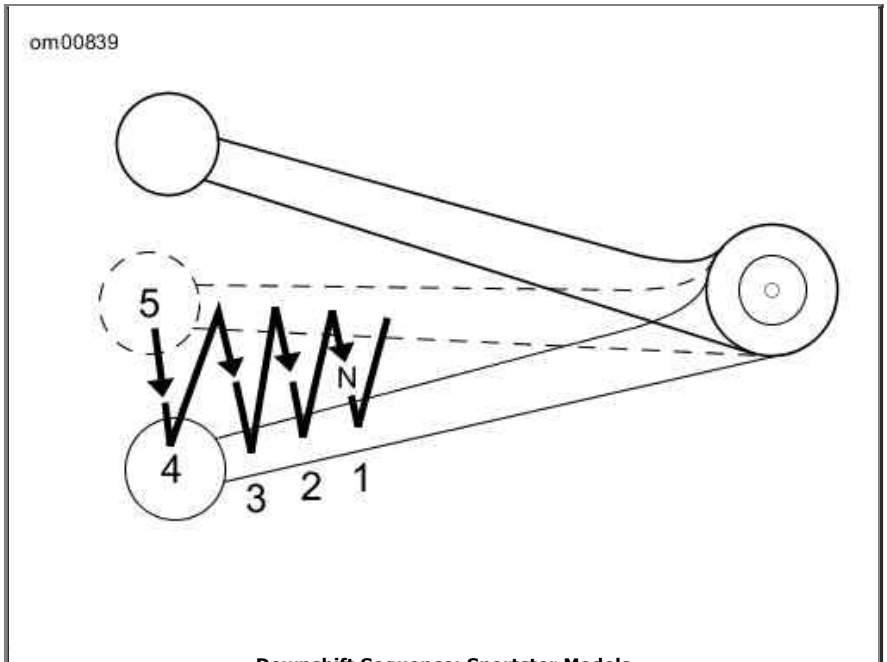

Downshift Sequence: Sportster Models

Stopping the Engine

1. Stop the engine by turning the engine OFF/RUN switch on the right handlebar to OFF.
2. Turn the ignition switch to OFF. If the engine should be stalled or stopped in any way, turn the ignition switch to OFF at once to prevent battery discharge.

Maintenance and Lubrication

Safe Operating Maintenance

⚠WARNING

Perform the service and maintenance operations as indicated in the regular service interval table. Lack of regular maintenance at the recommended intervals can affect the safe operation of your motorcycle, which could result in death or serious injury. (00010a)

Good maintenance creates a safe motorcycle. A careful check of certain equipment must be made after periods of storage. Also, frequently inspect the motorcycle between the regular service intervals to determine if additional maintenance is necessary.

Check the following items:

1. Tires for correct pressure, abrasions or cuts.
2. Belt and primary chain for proper tension, wear or damage.
3. Brakes, steering and throttle for responsiveness and freedom from binding.
4. Brake fluid level and condition. Hydraulic lines and fittings for leaks. Also, check brake pads and discs for wear.
5. Cables for fraying or crimping and free operation.
6. Engine oil and primary chaincase/transmission fluid levels.
7. Headlamp, tail lamp, brake lamp and turn signals for proper operation.

Break-in Maintenance

NOTE:

The performance of new motorcycle initial service is required to keep your new motorcycle warranty in force and for proper emissions system operation.

After a new motorcycle has been ridden its first 1000 mi 1600 km , it should be taken to an authorized Harley-Davidson dealer for initial service operations. Refer to Regular Service Intervals: 2013 Sportster Models.

Engine Lubrication

⚠CAUTION

Prolonged or repeated contact with used motor oil may be harmful to skin and could cause skin cancer. Promptly wash affected areas with soap and water. (00358b)

⚠CAUTION

If swallowed, do not induce vomiting. Contact a physician immediately. In case of contact with eyes, immediately flush with water. Contact a physician if irritation persists. (00357c)

CAUTION

Do not switch lubricant brands indiscriminately because some lubricants interact chemically when mixed. Use of inferior lubricants can damage the engine. (00184a)

Engine oil is a major factor in the performance and service life of the engine. Always use the proper grade of oil for the lowest temperature expected before the next scheduled oil change. Refer to Recommended Engine Oils.

This motorcycle was originally equipped with GENUINE HARLEY-DAVIDSON H-D 360 MOTORCYCLE OIL 20W50. H-D 360 is the preferred oil under normal operating conditions. If operation under extreme cold or heat are expected, refer to Recommended Engine Oils for alternative choices.

If necessary and H-D 360 is not available, add oil certified for diesel engines. Acceptable designations include: CH-4, CI-4 and CJ-4. The preferred viscosities, in descending order are: 20W50, 15W40 and 10W40.

At the first opportunity, see an authorized dealer to change back to 100 percent Harley-Davidson oil.

Recommended Engine Oils

TYPE	VISCOSITY	RATING	LOWEST AMBIENT TEMPERATURE	COLD WEATHER STARTS BELOW 50 °F (10 °C)
Screamin' Eagle SYN 3 Full Synthetic Motorcycle Lubricant	SAE 20W50	HD 360	Above 30 °F -1 °C	Excellent
Genuine Harley-Davidson H-D 360 Motorcycle Oil	SAE 20W50	HD 360	Above 40 °F 4 °C	Good
Genuine Harley-Davidson H-D 360	SAE 50	HD 360	Above 60 °F 16	Poor

Motorcycle Oil			°C	
Genuine Harley-Davidson H-D 360 Motorcycle Oil	SAE 60	HD 360	Above 80 °F 27 °C	Poor
Genuine Harley-Davidson H-D 360 Motorcycle Oil	SAE 10W40	HD 360	Below 40 °F 4 °C	Excellent

Checking and Adding Oil

Removing and Replacing Oil Filler Cap

1. Park the motorcycle on level ground on the jiffy stand.
2. See Filler Cap Location. Remove the filler cap from the oil tank.
   a. Press straight down on the filler cap and release. The cap will pop up.
   b. Pull up on the filler cap while turning counterclockwise one-quarter turn as if removing the filler cap.
3. Wipe the dipstick clean.

   NOTE:

   See Filler Cap Slots. Align tabs on oil tank filler neck to slots (1, 2) on dipstick.
4. Insert the dipstick into the tank.
   a. Turn the filler cap clockwise one-quarter turn as if screwing the filler cap into tank. When the filler cap stops turning, it is seated.
   b. Press down on the filler cap until it snaps in place, flush with the top of the oil tank cover.

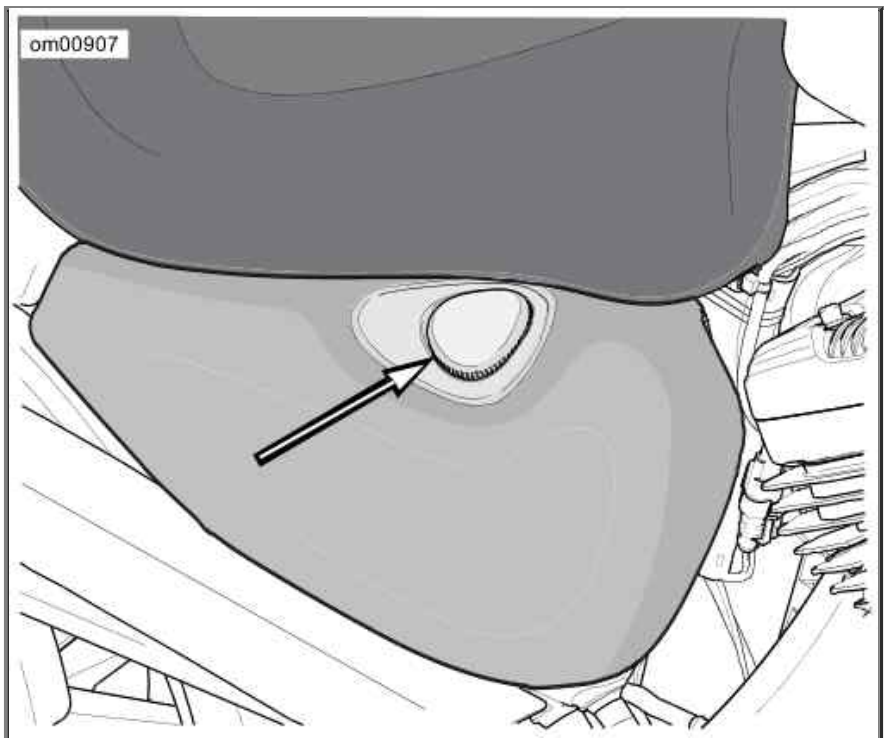

Filler Cap Location

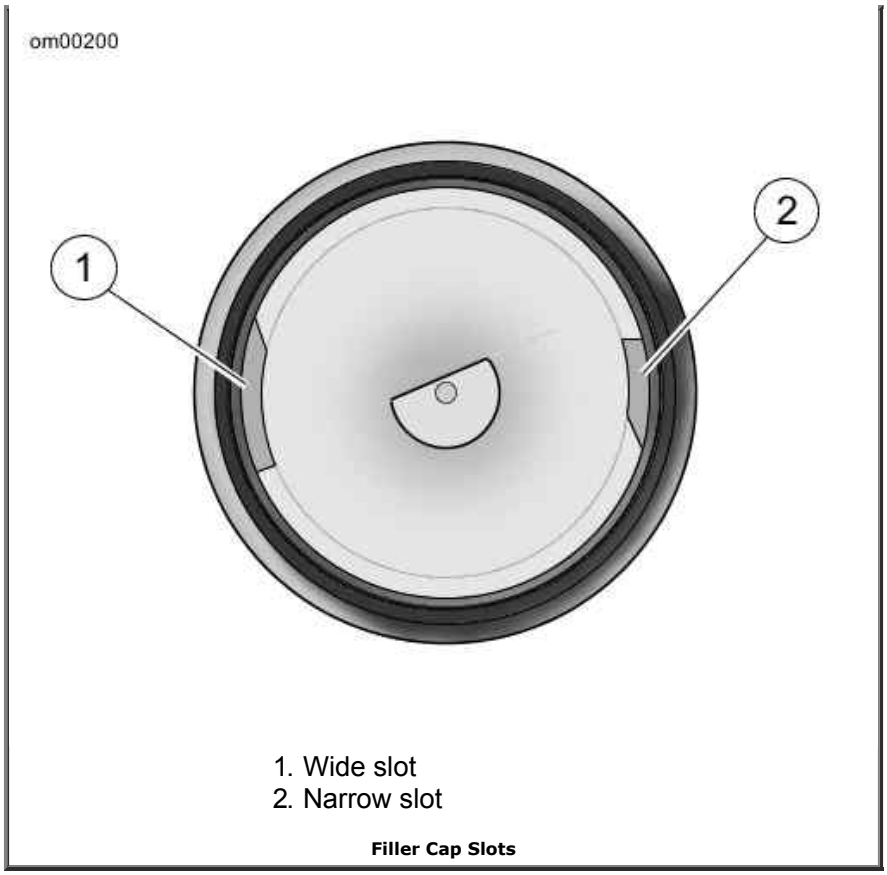

Filler Cap Slots

Oil Level Cold Check

NOTES:

- *Check engine oil level at each complete fuel refill.*
- *An accurate engine oil check can only be made with the engine at operating temperature (Hot Check).*

1. Park the motorcycle on level ground on the jiffy stand.
2. Remove the filler cap and wipe the dipstick clean. Install the oil filler cap in tank.
3. Remove oil filler cap again and visually check for oil in the tank.
4. If oil is not visible in the tank, install the filler cap.

NOTE:

If the oil pressure lamp stays lit after starting engine, immediately shut the engine off.

5. Start and idle the engine for 30 seconds. Stop the engine.
6. Remove oil filler cap and visually check for oil in the tank.

CAUTION

Do not overfill oil. Doing so can result in oil carryover to the air cleaner leading to equipment damage and/or equipment malfunction. (00190b)

NOTE:

Use only recommended oil. Recommended viscosity depends upon ambient temperature. Refer to Recommended Engine Oils.

7. If there is no oil visible in the tank, add oil until it is present on the bottom of the dipstick.
8. When oil is present on the bottom of the dipstick, perform a hot check.

Oil Level Hot Check

1. Run the engine until the engine oil is at operating temperature.
2. Idle the motorcycle on the jiffy stand for one to two minutes. Turn the engine off.
3. Park the motorcycle on level ground on the jiffy stand.
4. Remove the filler cap. Wipe the dipstick clean and install the filler cap in the tank.

CAUTION

Do not allow hot oil level to fall below Add/Fill mark on dipstick. Doing so can result in equipment damage and/or equipment malfunction. (00189a)

NOTES:

- *Use only recommended oil. Recommended viscosity depends upon ambient temperature. Refer to Recommended Engine Oils.*
- *Do not overfill the oil tank. The oil tank has a built-in pressure relief valve. If the oil tank is overfilled, excessive pressure is created in the oil tank. The pressure relief valve will open to relieve the pressure and prevent damage to the oil tank. Excessive oil due to overfilling will also be forced out the pressure relief valve when it opens.*

CAUTION

Do not overfill oil. Doing so can result in oil carryover to the air cleaner leading to equipment damage and/or equipment malfunction. (00190b)

5. See Dipstick. Remove the filler cap and check the hot oil level on the dipstick.
   a. **Below the lower mark:** Add only enough oil until the level reads between the upper and lower marks.
   b. **Between the upper and lower marks:** It is safe to operate the motorcycle.
   c. **At (or above) the upper mark:** Drain the oil until the level reads between the upper and lower marks.
6. Install the filler cap.
7. If oil was added, remove the filler cap and verify the engine oil level in the oil tank. Do not fill oil tank to a level above upper mark on the dipstick. Install the filler cap.

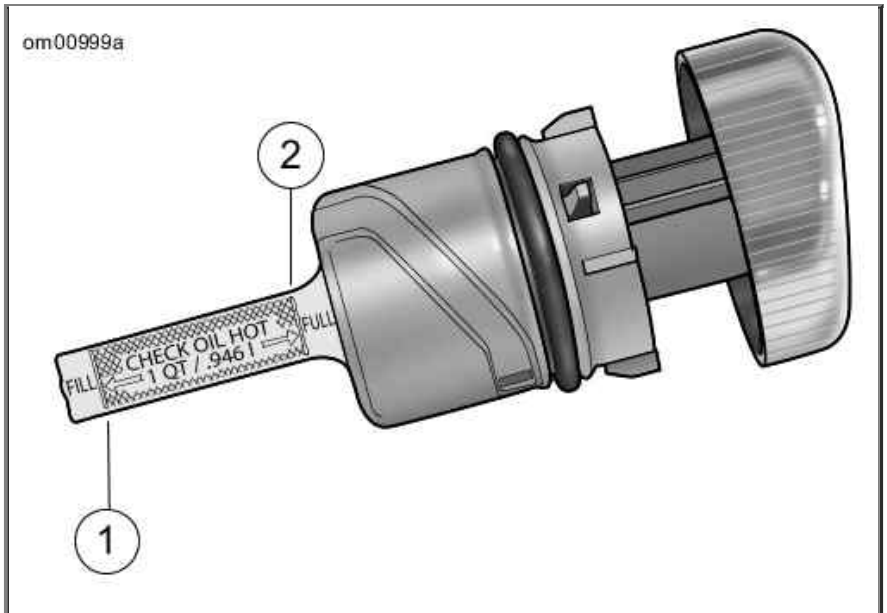

1. Lower mark (FILL)
2. Upper mark (FULL)

Dipstick

Changing Oil and Filter

CAUTION

Do not switch lubricant brands indiscriminately because some lubricants interact chemically when mixed. Use of inferior lubricants can damage the engine. (00184a)

Completely drain oil tank of used oil at scheduled service intervals. Refill with fresh oil. Refer to Regular Service Intervals: 2013 Sportster Models.

NOTES:

- *Change oil at specified intervals in normal service at warm or moderate temperatures.*
- *Change engine oil at shorter intervals in cold weather or in severe operating conditions. See Winter Lubrication.*
- *Change engine oil at shorter intervals if ridden extremely hard, used in competition, or driven on dusty roads.*
- *Always change oil filter when changing engine oil.*

⚠WARNING

Be sure that no lubricants or fluids get on tires, wheels or brakes when changing fluid. Traction can be adversely affected, which could result in loss of control of the motorcycle and death or serious injury. (00047d)

Draining Oil Tank

1. Run engine until engine oil has reached normal operating temperature.

2. Remove dipstick from oil tank. Oil will drain faster when the dipstick is removed.

3. See Oil Tank Drain Hose. Place a suitable container directly under the drain hose (1) at the bottom rear of the engine crankcase. The container must be able to hold approximately 3.0 qt 2.8 L .

4. Loosen worm drive clamp (2). Pull drain plug (3) from end of drain hose. Completely drain

engine oil from oil tank. Drain engine crankcase only if needed.

5. Install drain plug into end of drain hose. Tighten worm drive clamp to 6-10 in-lbs (0.7-1.1 Nm).

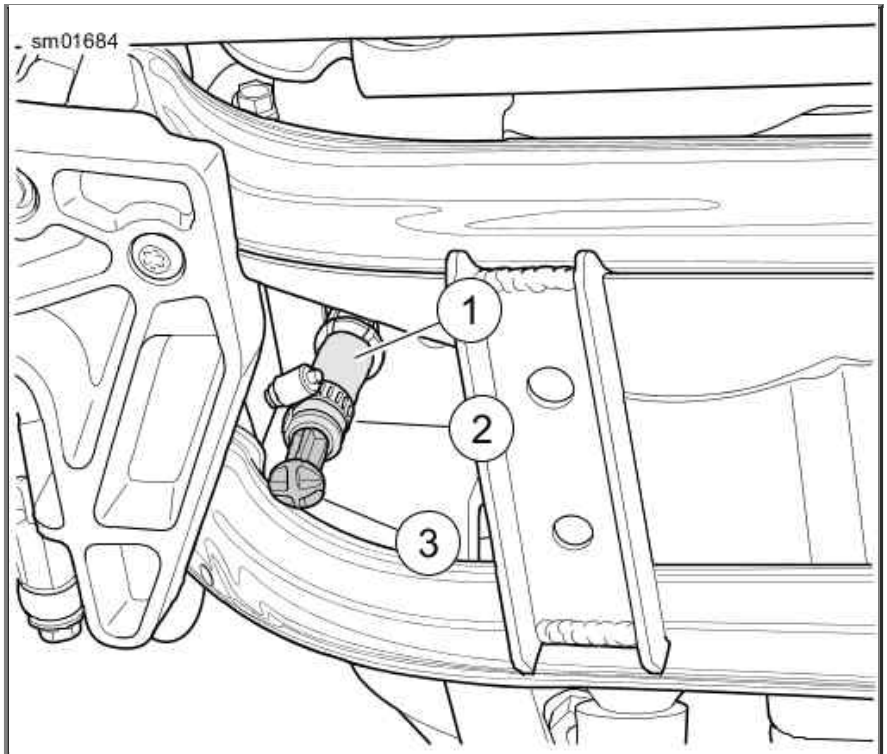

1. Oil tank drain hose
2. Worm drive clamp
3. Drain plug

Oil Tank Drain Hose

Removing Oil Filter

1. Place a drain pan beneath front of engine crankcase.

CAUTION

Use Harley-Davidson oil filter wrench for filter removal. This tool can prevent damage to crankshaft position sensor and/or sensor cable. (00192b)

2. See Oil Filter Wrenches and Oil Filter. Remove oil filter using HARLEY-DAVIDSON OIL FILTER WRENCH HD-42311 or HARLEY-DAVIDSON OIL FILTER WRENCH HD-44067-A . Turn oil filter counterclockwise to remove from filter mount.

3. Drain oil filter into drain pan. Discard oil filter.

4. Clean any oil spills off crankcase and frame.

NOTE:

Dispose of oil and oil filter in accordance with local regulations.

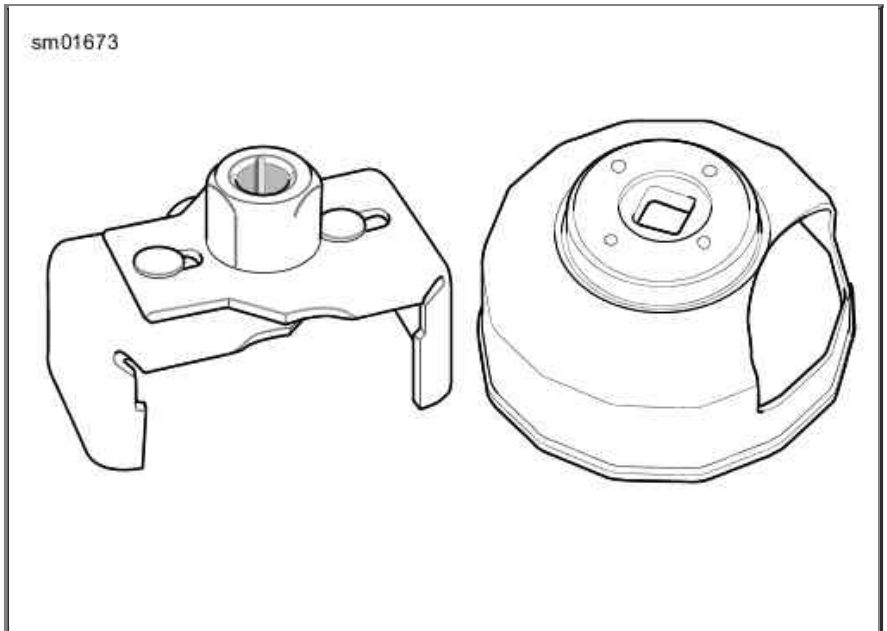

Oil Filter Wrenches

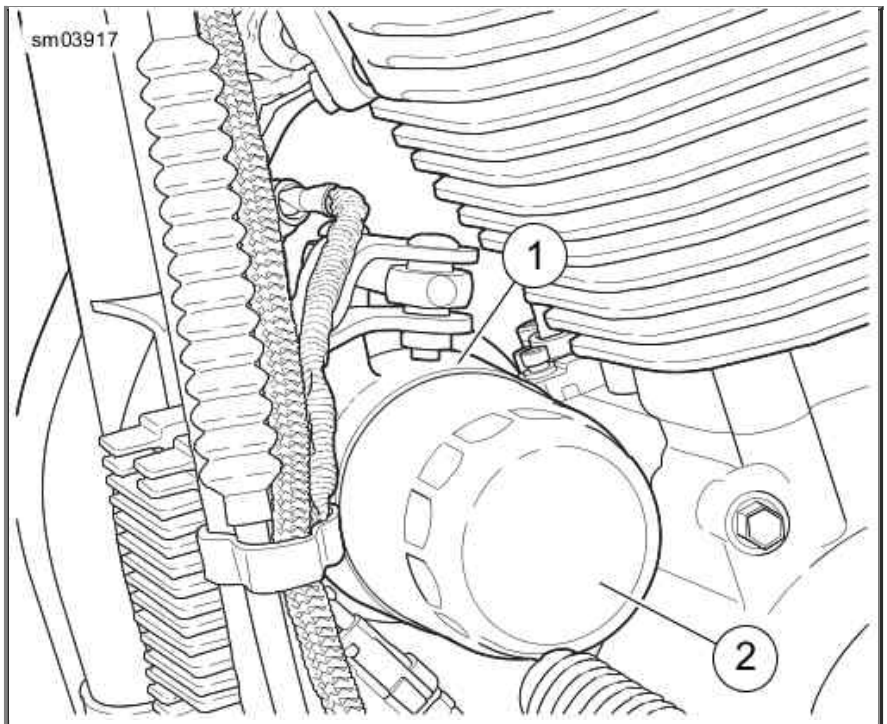

1. Oil filter mount
2. Oil filter

Oil Filter

Installing Oil Filter

NOTE:

Minimize the time required for buildup of oil pressure when engine is first started. Partially fill oil filter before installation.

1. Pour about 4 fl oz 120 mL of fresh, clean engine oil into **new** oil filter. Allow time for oil to soak into filter element.

2. See Applying Thin Oil Film. Wipe filter gasket contact surface of oil filter mount with a clean cloth. Surface should be smooth and free of any debris or old gasket material.

3. Apply a thin film of oil to gasket contact surface on crankcase (3) and gasket surface of **new** oil filter.

   NOTE:

*Do not use oil filter wrench to install **new** oil filter.*

4. Install **new** oil filter. Screw filter clockwise onto adapter until gasket contacts the filter mount surface. Then hand tighten an additional 1/2-3/4-turn to secure the oil filter.

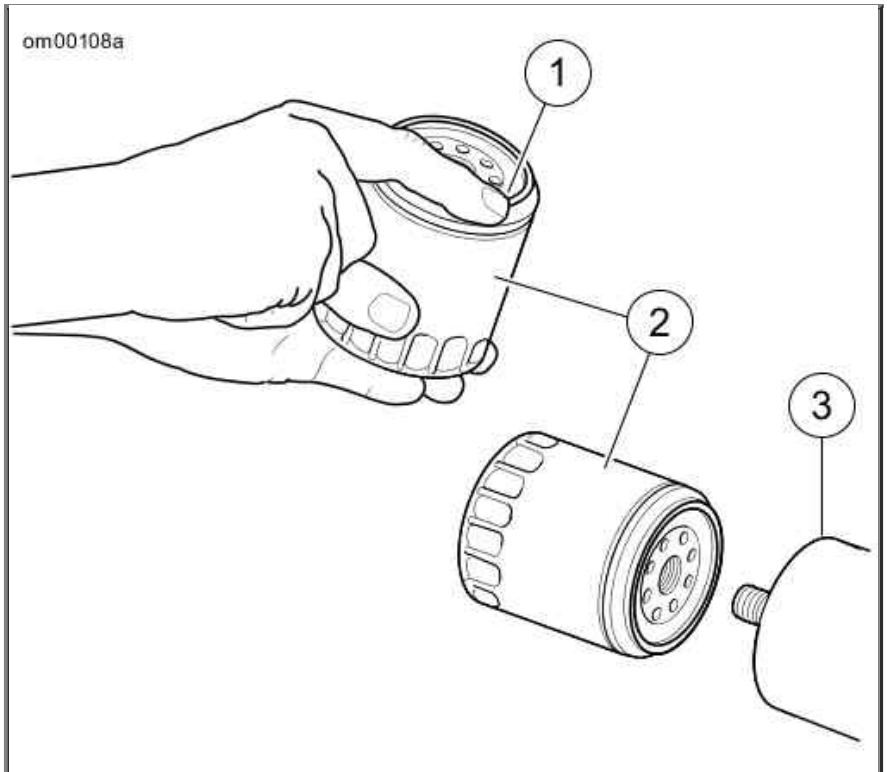

1. Thin film of oil ONLY
2. Oil filter
3. Mounting plate

Applying Thin Oil Film

Refilling Oil Tank

CAUTION

Do not overfill oil. Doing so can result in oil carryover to the air cleaner leading to equipment damage and/or equipment malfunction. (00190b)

NOTE:

Do not overfill the oil tank. The oil tank has a built-in pressure relief valve. If the oil tank is overfilled, excessive pressure is created in the oil tank. The pressure relief valve will open to relieve the pressure and prevent damage to the oil tank. Excessive oil due to overfilling will also be forced out the pressure relief valve when it opens.

1. Refer to Recommended Engine Oils. Always use the proper grade of oil for the lowest expected air temperature before the next regularly scheduled oil change. Pour 2.0 qt 1.9 L of oil into engine oil tank.

2. Install dipstick in oil tank. Verify cap is fully seated.

3. See Oil Pressure Indicator. Start engine. Verify that oil pressure signal lamp turns off when engine speed is 1000 rpm or above. Turn engine off.

4. Check for oil leaks at oil filter and oil tank drain hose. Perform oil level hot check.

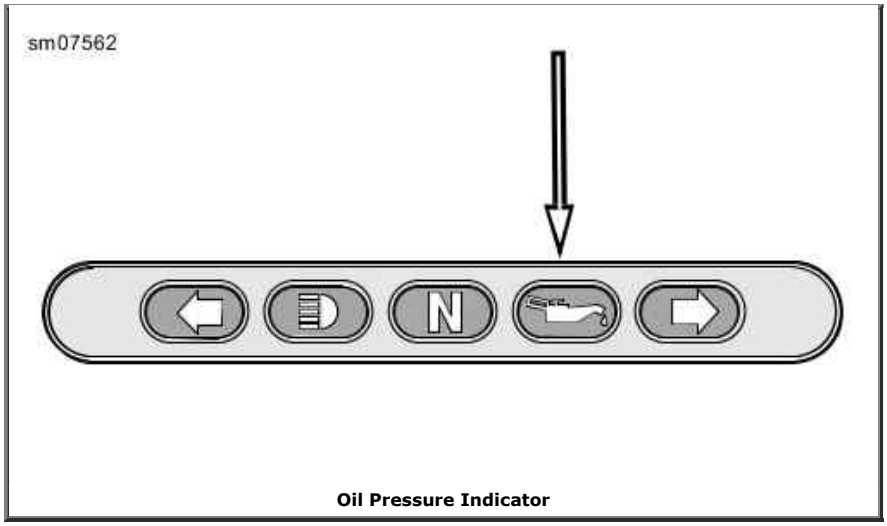

Oil Pressure Indicator

Winter Lubrication

Change engine oil often in colder climates. If motorcycle is frequently used for trips less than 15 mi 24 km , in ambient temperatures below 60 °F 16 °C , reduce oil change intervals to 1500 mi 2400 km .

NOTE:

The further below freezing the temperature drops, the shorter the oil change interval should be.

Water vapor is a normal by-product of combustion in any engine. During cold weather operation, some water vapor condenses to liquid form on the cool metal surfaces inside the engine. In freezing weather this water will become slush or ice. Over time, accumulated slush or ice may block the oil lines and cause engine damage.

If the engine is run frequently and allowed to thoroughly warm up, most of this water will become vapor again and will be blown out through the crankcase breather.

If the engine is not run frequently and not allowed to thoroughly warm up, this water will accumulate, mix with the engine oil and form a sludge that is harmful to the engine.

Transmission Lubrication

Refer to Regular Service Intervals: 2013 Sportster Models. The transmission should be drained and refilled with fresh lubricant at proper intervals. For best results, drain lubricant while hot.

NOTE:

When checking the transmission lubricant level, motorcycle should be standing STRAIGHT UP, not leaning on the jiffy stand. Keep motorcycle upright for a short period of time to equalize lubricant level in the transmission compartments.

CAUTION

When draining or adding lubricant, do not allow dirt, debris or other contaminants to enter the engine. (00198a)

⚠WARNING

Be sure that no lubricants or fluids get on tires, wheels or brakes when changing fluid. Traction can be adversely affected, which could result in loss of control of the motorcycle and death or serious injury. (00047d)

CAUTION

Do not overfill the primary chaincase with lubricant. Overfilling can cause rough clutch engagement, incomplete disengagement, clutch drag and/or difficulty in finding neutral at engine idle. (00199b)

Check Lubricant Level

1. Ride motorcycle until engine is warmed up to normal operating temperature.
2. Position motorcycle straight up.

⚠WARNING

To prevent accidental vehicle start-up, which could cause death or serious injury, remove main fuse before proceeding. (00251b)

3. Remove main fuse. See Fuses and Relays.
4. **XL models with mid-mount controls:** See Mid-Mount Rider Footrest Assembly: XL Models. Remove screws and detach the rider footrest support bracket from the left side of the vehicle.
5. **XR 1200X:** See Rider Footrest Assembly (left): XR 1200X. Remove screws and detach the rider footrest support bracket from the left side of the vehicle. With the shift linkage still attached, lower the footrest assembly to access the clutch inspection cover screws.
6. See Primary Cover: XL Model. Remove screws with washers from clutch inspection cover. Remove clutch inspection cover from primary cover.

   NOTE:

   The filler access is the clutch inspection cover.

7. See Chaincase Lubricant Level. Verify that lubricant level is even with bottom of clutch diaphragm spring.

   NOTE:

   Add only enough of FORMULA+ TRANSMISSION AND PRIMARY CHAINCASE LUBRICANT through clutch inspection cover opening until the lubricant reaches the bottom of clutch diaphragm spring.

8. Install the clutch inspection cover.
   a. Install **new** quad ring.
   b. Verify that quad ring is fully seated in groove of primary cover.
   c. Install clutch inspection cover and secure with six screws.
   d. Tighten in a crosswise pattern to 90-120 in-lbs (10.2-13.6 Nm).
9. If the left footrest assembly was removed, install support bracket with two screws. Tighten screws to 45-50 ft-lbs (61.0-67.8 Nm).
10. Install main fuse.
11. Start engine. Check for any lubricant leaks.
12. Turn engine off.

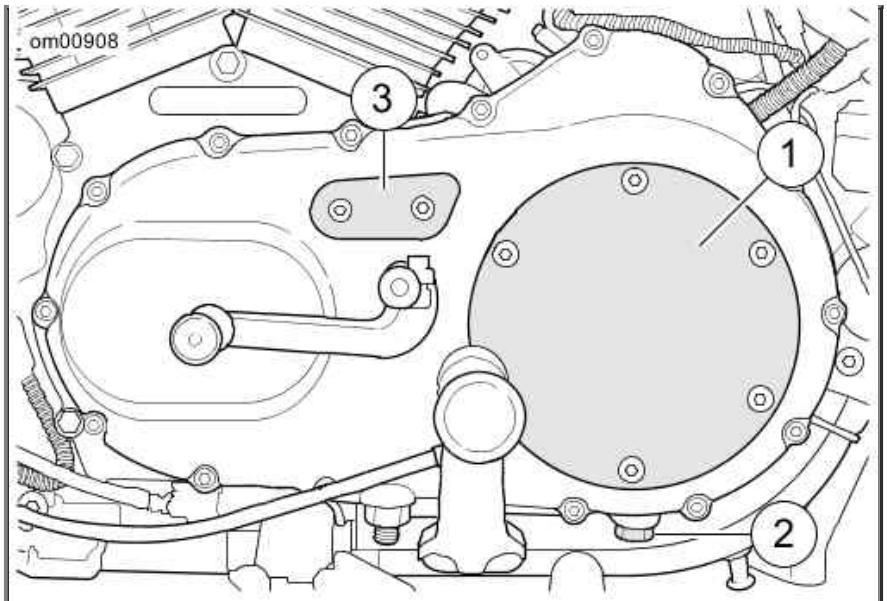

1. Clutch inspection cover
2. Drain plug
3. Primary chain inspection cover

Primary Cover: XL Model

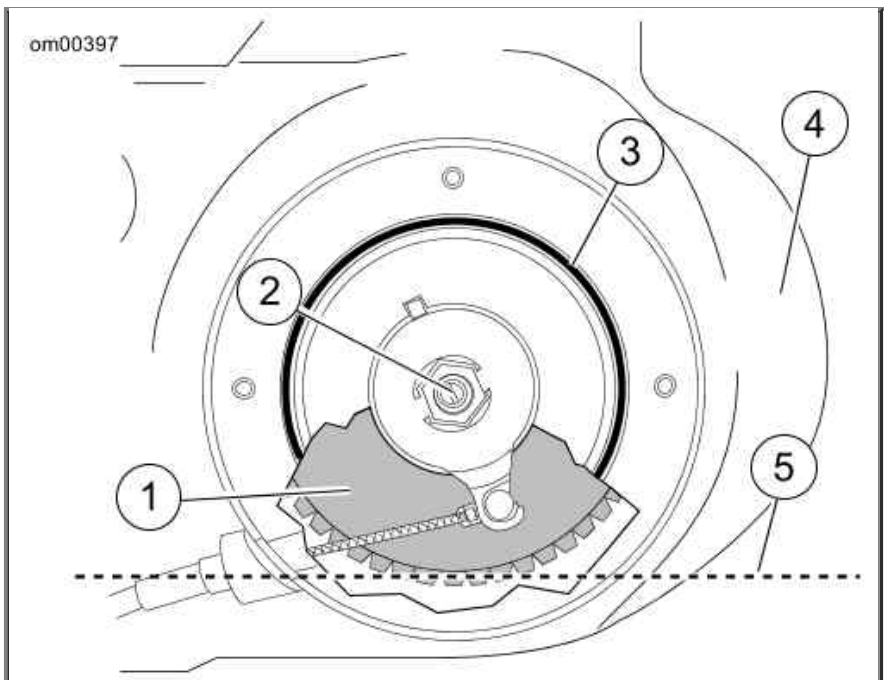

1. Clutch diaphragm spring
2. Clutch adjusting screw
3. Quad ring
4. Primary cover
5. Chaincase lubricant level

Chaincase Lubricant Level

Changing Lubricant

1. Ride motorcycle until engine is warmed up to normal operating temperature.
2. When the engine reaches normal operating temperature, turn the engine off and position motorcycle on jiffy stand. This will allow the chaincase lubricant to drain out of transmission.

⚠WARNING

To prevent accidental vehicle start-up, which could cause

death or serious injury, remove main fuse before proceeding. (00251b)

3. Remove main fuse. See Fuses and Relays.
4. See Primary Cover: XL Model. Position a suitable container under transmission drain plug (2).
5. The drain plug is located under the clutch, on the underside of the primary cover. Remove drain plug and drain lubricant.
6. Position the motorcycle STRAIGHT UP and LEVEL. This allows additional fluid to be drained from clutch compartment.

   NOTE:

   Dispose of lubricant in accordance with local regulations.

CAUTION

Do not over-tighten filler or drain plug. Doing so could result in a lubricant leak. (00200b)

7. Remove foreign material from magnetic drain plug. Replace the O-ring if it is damaged.
8. Apply LOCTITE 565 PIPE SEALANT WITH TEFLON and install drain plug. Tighten to 14-30 ft-lbs (19.0-40.7 Nm).
9. **XL models with mid-mount controls:** See Mid-Mount Rider Footrest Assembly: XL Models. Remove screws and detach the rider footrest support bracket from the left side of the vehicle.
10. **XR 1200X:** See Rider Footrest Assembly (left): XR 1200X. Remove screws and detach the rider footrest support bracket from the left side of the vehicle. With the shift linkage still attached, lower the footrest assembly to access the clutch inspection cover screws.
11. See Primary Cover: XL Model. Remove screws with washers from clutch inspection cover. Remove clutch inspection cover from primary cover.

    NOTE:

    The filler access is the clutch inspection cover.

12. See Chaincase Lubricant Level. Add 1.00 qt 0.95 L of FORMULA+ TRANSMISSION AND PRIMARY CHAINCASE LUBRICANT (Part No. 98851-05 qt) through clutch inspection cover opening until the lubricant reaches the bottom of clutch diaphragm spring.
13. Install the clutch inspection cover.
    a. Install **new** quad ring.
    b. Verify that quad ring is fully seated in groove of primary cover.
    c. Install clutch inspection cover and secure with six screws.
    d. Tighten in a crosswise pattern to 90-120 in-lbs (10.2-13.6 Nm).
14. If the left footrest assembly was removed, install support bracket with two screws. Tighten screws to 45-50 ft-lbs (61.0-67.8 Nm).
15. Install main fuse.
16. Start engine. Check for any lubricant leaks.
17. Turn engine off.

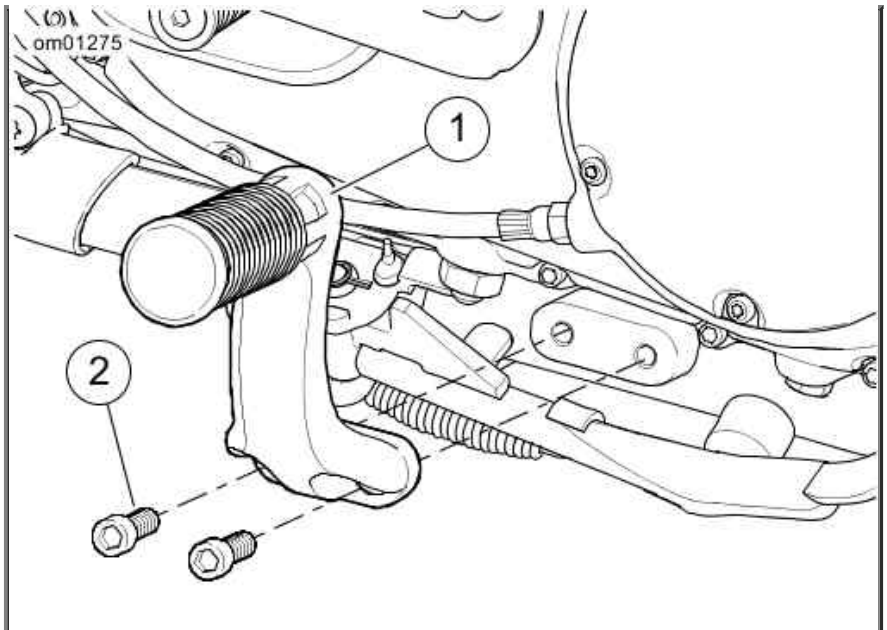

1. Support bracket
2. Screws (2)

Mid-Mount Rider Footrest Assembly: XL Models

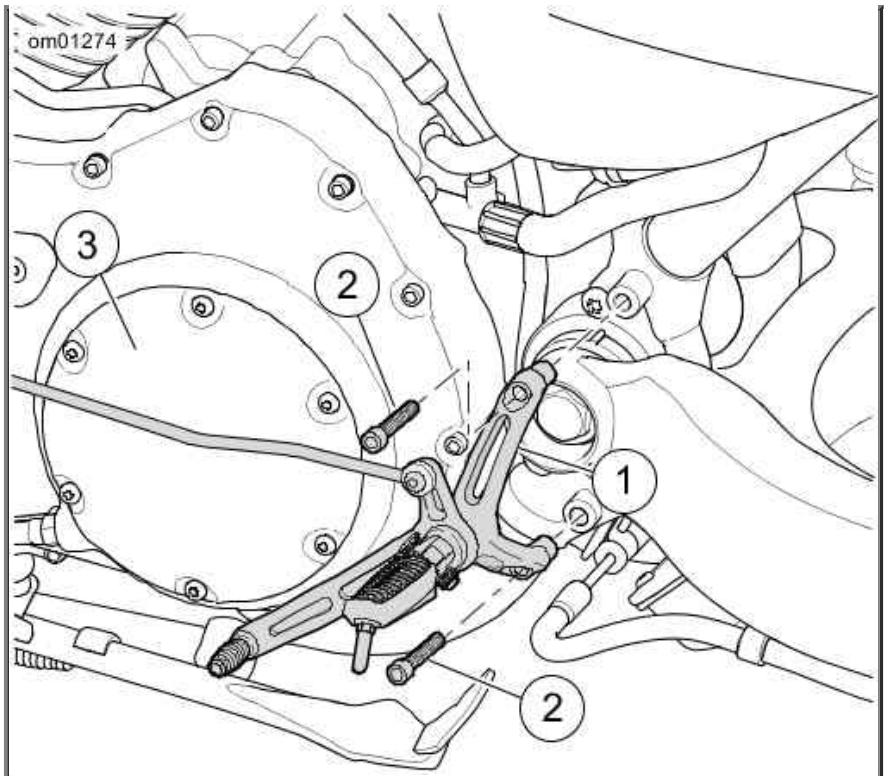

1. Rider footrest support bracket
2. Screws (2)
3. Shift linkage

Rider Footrest Assembly (left): XR 1200X

Primary Chain Free Play

Primary Chain Inspection

Primary chain free play should be inspected at proper intervals and adjusted as necessary. If the chain is allowed to run loose, it will cause the motorcycle to jerk when running at low speed, and chain and sprockets will wear excessively. If this happens, see a Harley-Davidson dealer.

⚠WARNING

To prevent accidental vehicle start-up, which could cause death or serious injury, remove main fuse before proceeding. (00251b)

1. Remove main fuse. See Fuses and Relays.
2. See Primary Chain Free Play. Remove the two hex socket screws and the primary chain inspection cover (1).
3. See Primary Chain Adjuster: Sportster Models. Check primary chain tension by measuring free play.
   a. Measure free play through chain inspection cover opening.
   b. Rotate engine to move primary chain to a different position on sprockets.
   c. Measure free play several times, each time with primary chain moved so that the measurement is taken with sprockets rotated to the tightest chain position.
4. The tightest measurement in previous step must be within the specifications. Adjust as necessary. Refer to Primary Chain Free Play Specifications.

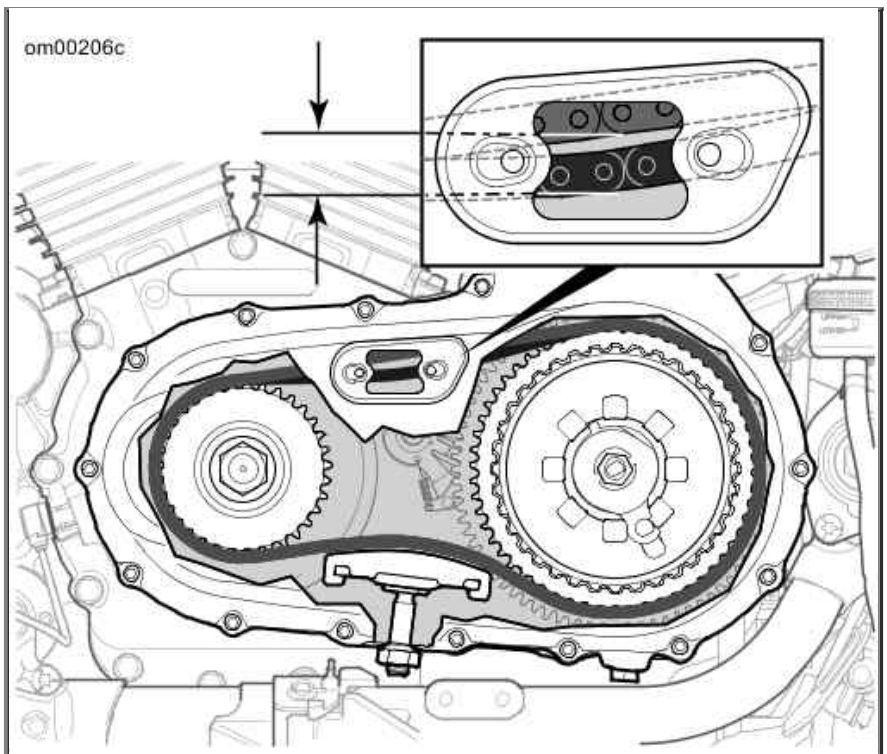

Primary Chain Free Play

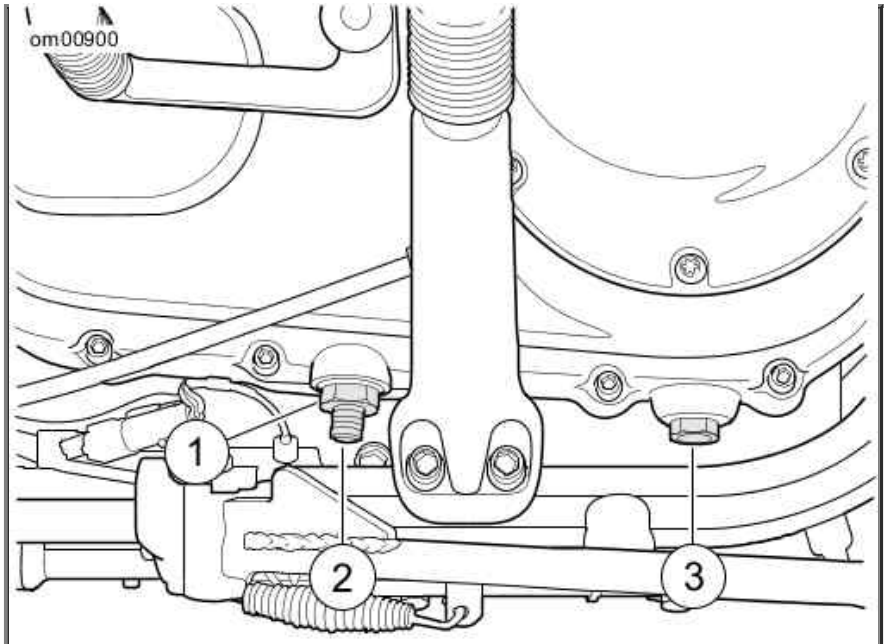

1. Locknut
2. Chain adjuster screw
3. Transmission chaincase drain plug

Primary Chain Adjuster: Sportster Models

Primary Chain Free Play Specifications

ENGINE	in	mm
Cold	3/8-1/2	9.5-12.7
Hot	1/4-3/8	6.3-9.5

Primary Chain Adjustment

CAUTION

Do not adjust the primary chain tighter than specified. Running chain too tight will result in excessive wear. (00202a)

1. See Primary Chain Free Play. Loosen locknut (2).
2. Turn chain adjuster screw (3) clockwise (inward) to reduce free play or counterclockwise (outward) to increase free play. Free play must fall within specifications. Refer to Primary Chain Free Play Specifications.

   NOTE:

   If free play cannot be set within specification, then primary chain and/or chain adjuster are worn beyond adjustment limits. See your Harley-Davidson dealer.

3. When free play is set correctly, hold chain adjusting screw and tighten locknut to 20-25 ft-lbs (27-34 Nm).
4. Install primary chain inspection cover with a **new** gasket. Tighten hex socket screws to 90-120 in-lbs (10.2-13.6 Nm).
5. Install main fuse.

General

Belt teeth are coated with polyethylene lubricant. Coating will wear off over time. This is not an indicator of belt wear.

Gauging Deflection

NOTES:

- *When gauging deflection, check the rear brake caliper position on rear brake disc. Disc should run true within brake caliper.*
- *Check belt deflection at the loosest spot in the belt with the transmission in neutral and the motorcycle at ambient temperature.*

1. With the motorcycle unladen and resting on its jiffy stand, fit the BELT TENSION GAUGE HD-35381-A on the belt.
   a. **XL Models:** See Belt Deflection: XL Models. Position the gauge half-way (1) between the transmission and rear wheel sprockets.
   b. **XR 1200X:** See Belt Deflection: XR 1200X. Fit the tension gauge half-way (1) between the idler wheel and rear sprocket.
2. With the BELT TENSION GAUGE set to 0 lb 0 kg , note the current belt position.
   a. **XL Models:** See Belt Deflection: XL Models. View position through window (2) on drive belt guard.
   b. **XR 1200X:** See Belt Deflection: XR 1200X. View position (2) on front of debris deflector (2).
3. Using the BELT TENSION GAUGE, apply 10 lb 4.5 kg of force to the bottom belt.
4. Count the number of graduations (3) between the original belt position and after applying the force.
5. Multiply this number by 1/8 in 3.2 mm to determine the deflection. Compare the deflection to specifications. Refer to Belt Deflection Specifications*.
6. If adjustment is necessary, see a Harley-Davidson dealer or follow the belt deflection adjustment procedure in the service manual.

⚠WARNING

Be sure wheel and brake caliper are aligned. Riding with a misaligned wheel or brake caliper can cause the brake disc to bind and lead to loss of control, which could result in death or serious injury. (00050a)

Belt Deflection Specifications*

MODELS	in	mm
XL 883R	9/16-5/8	14.3-15.9
Other XL models	1/4-5/16	6.4-7.9
XR 1200X	1/4-3/8	6.4-9.5
* Deflection measured at 10 lb 4.5 kg tension.		

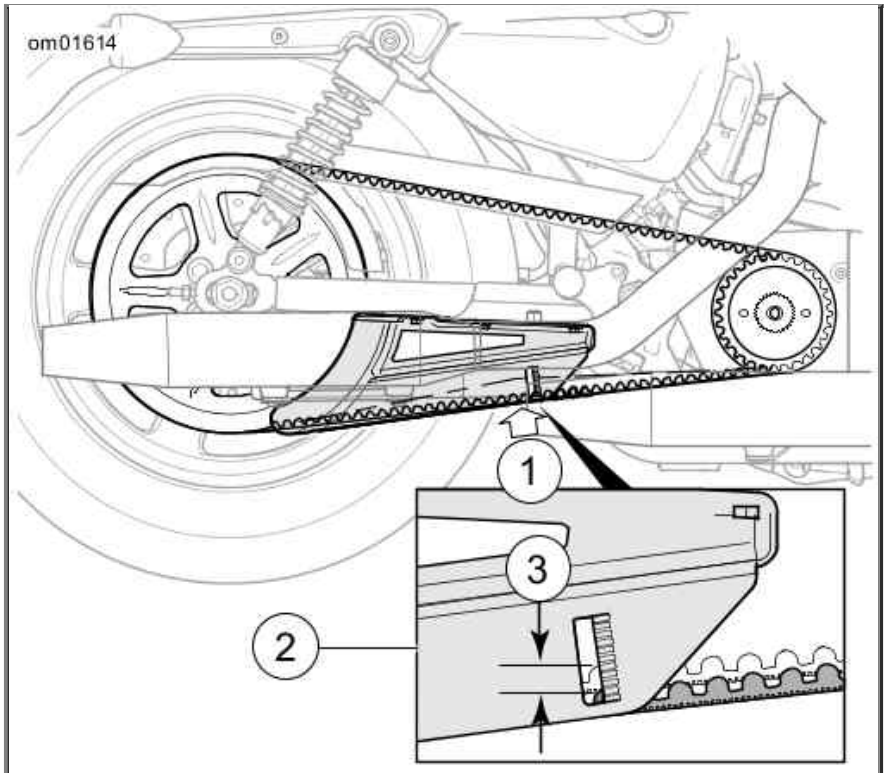

1. 10 lb (4.5 kg)
2. Deflection gauge
3. Graduations 1/8 in (3.2 mm)

Belt Deflection: XL Models

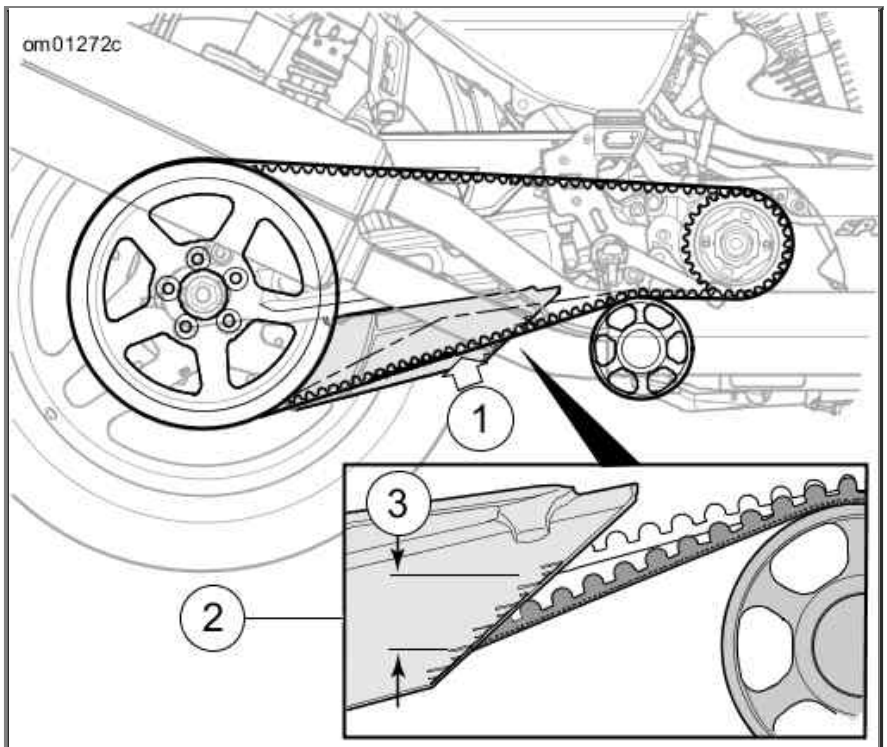

1. 10 lb (4.5 kg)
2. Deflection gauge
3. Graduations 1/8 in (3.2 mm)

Belt Deflection: XR 1200X

Chassis Lubrication

Refer to Regular Service Intervals: 2013 Sportster Models for all maintenance schedules.

NOTE:

Use recommended SPECIAL PURPOSE GREASE for steering head bearings. Use a multipurpose chassis grease for other applications.

1. Remove and lubricate handlebar throttle control grip sleeve with fresh graphite.
2. Lubricate throttle control cables and clutch control cable with HARLEY LUBE.
3. Lubricate front brake hand lever and clutch control hand lever only if necessary.
4. Inspect rear fork pivot shaft bearings.
5. Pack the steering head bearings with SPECIAL PURPOSE GREASE at recommended service intervals.
6. Lubricate the jiffy stand mechanism with SILVER GRADE ANTI-SEIZE.

NOTE:

For model specific information regarding the chassis lubrication, refer to the appropriate Service Manual or see a Harley-Davidson dealer.

Oil Applications

Refer to Regular Service Intervals: 2013 Sportster Models for all control connections and parts. Vehicle should be lubricated at regular intervals, particularly after washing motorcycle or driving in wet weather.

Front Fork Oil

Refer to Regular Service Intervals: 2013 Sportster Models. Have a Harley-Davidson dealer drain the front fork oil and refill at proper intervals. If fork does not appear to be working properly or an appreciable amount of oil leakage should develop, see a Harley-Davidson dealer. If there is insufficient oil in either side of fork, the rebound action will be incorrect.

Clutch

CAUTION

The clutch control cable must be oiled and adjusted periodically to compensate for lining wear. See MAINTENANCE SCHEDULING in this manual. Failure to oil and adjust the clutch control cable can result in equipment damage. (00203b)

The need for attention to clutch and controls will be indicated by the clutch slipping under load or dragging when released. In this situation, check the control cable adjustment first. See a Harley-Davidson dealer for proper service.

Hydraulic Lifters

The hydraulic lifters are self-adjusting. They automatically adjust length to compensate for engine expansion and valve mechanism wear. This keeps the valve mechanism free of lash when the engine is running.

When starting an engine which has been turned off even for a few minutes, the valve mechanism may be slightly noisy until the hydraulic units completely refill with oil. If at any time the valve mechanism becomes abnormally noisy, other than for a short period immediately after engine is started, it is an indication that one or more of the hydraulic units may not be functioning properly.

Always check the engine oil level first since normal circulation of oil through the engine is necessary for proper operation of the hydraulic lifters.

If engine oil is at the proper level, the lifters may not be functioning properly because of dirt in the

oil supply passages leading to the lifter units. See a Harley-Davidson dealer for service.

Steering Head Bearings

⚠WARNING

Adjustments to steering head bearings should be performed by a Harley-Davidson dealer. Improperly adjusted bearings can adversely affect handling and stability, which could result in death or serious injury. (00051b)

Check for proper steering head bearing adjustment and lubricate bearings using SPECIAL PURPOSE GREASE at proper intervals. Refer to Regular Service Intervals: 2013 Sportster Models.

With motorcycle front end raised off the floor, be sure front fork turns freely without any binding or interference and that there is no appreciable front to rear fork movement indicating excessive bearing looseness. Steering head bearings should be adjusted according to service manual procedure, if necessary.

Brakes

Brake Fluid

CAUTION

D.O.T. 4 brake fluid will damage painted and body panel surfaces it comes in contact with. Always use caution and protect surfaces from spills whenever brake work is performed. Failure to comply can result in cosmetic damage. (00239b)

⚠CAUTION

Direct contact of D.O.T. 4 brake fluid with eyes can cause irritation. Avoid eye contact. In case of eye contact flush with large amounts of water and get medical attention. Swallowing large amounts of D.O.T. 4 brake fluid can cause digestive discomfort. If swallowed, obtain medical attention. Use in well ventilated area. KEEP OUT OF REACH OF CHILDREN. (00240a)

CAUTION

Do not allow dirt or debris to enter the master cylinder reservoir. Dirt or debris in the reservoir can cause improper operation and equipment damage. (00205c)

⚠WARNING

Clean filler cap before removing. Use only D.O.T. 4 brake fluid from a sealed container. Contaminated fluid can adversely affect braking, which could result in death or serious injury. (00504c)

1. Stand the motorcycle upright (not leaning on the jiffy stand) on a level surface.

2. Turn handlebar so the top of the brake master cylinder is level.

3. See Brake Fluid Sight Gauges. Look through the sight glass on the front brake fluid reservoir and at the marks on the side of the rear brake fluid reservoir to check the brake fluid level. If necessary, shine a flashlight on the rear brake fluid reservoir to view the level.

    a. The level in the sight glass or reservoir is the brake fluid level.

    b. If the fluid level is below the minimum mark or not present, see a Harley-Davidson dealer.

NOTES:

- *If the brake system is not leaking, there should never be a need to add fluid. If the fluid level is low, the pads are probably worn and need to be replaced. By replacing the pads, the fluid level will rise.*
- *Use only DOT 4 BRAKE FLUID and replace the brake fluid every two years. See a Harley-Davidson dealer.*

4. Verify that the front brake lever and the rear brake pedal have a firm feel when applied. If brakes are not firm, the brake system must be bled. See a Harley-Davidson dealer.

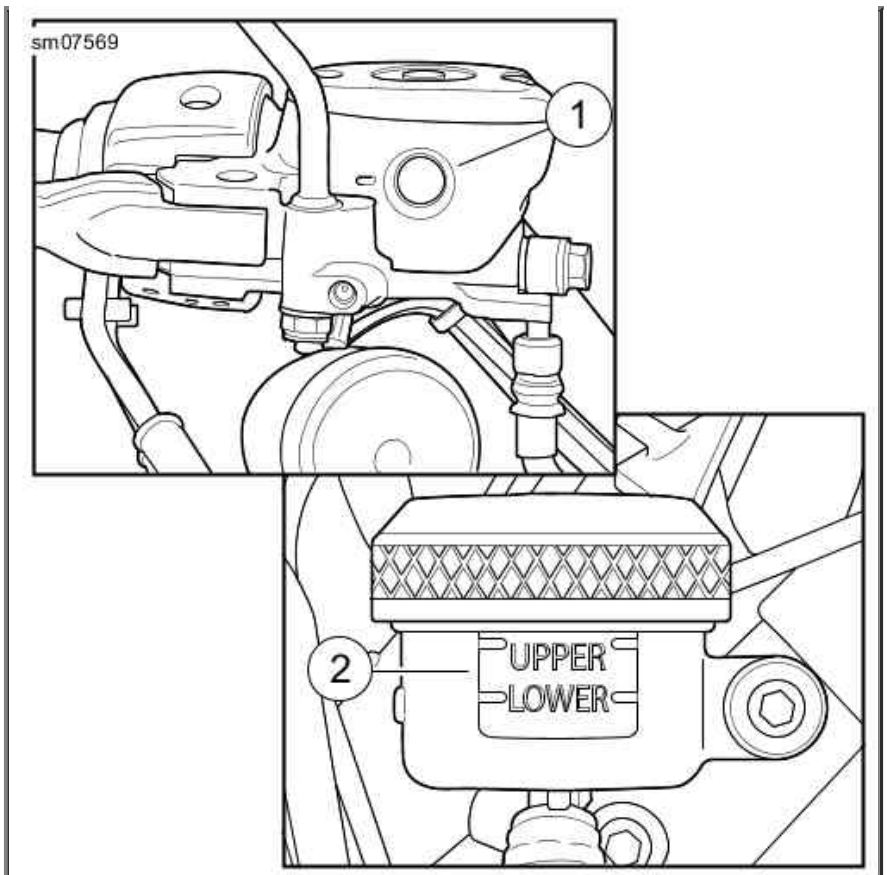

1. Front
2. Rear

Brake Fluid Sight Gauges

Brake Pads

⚠WARNING

Inspect brake pads for wear at service maintenance intervals. If you ride under adverse conditions (steep hills, heavy traffic, etc.), inspect more frequently. Excessively worn brake pads can lead to brake failure, which could result in death or serious injury. (00052a)

⚠WARNING

Always replace brake pads in complete sets for correct and safe brake operation. Improper brake operation could result in death or serious injury. (00111a)

⚠WARNING

Brakes are a critical safety component. Contact a Harley-Davidson dealer for brake repair or replacement. Improperly serviced brakes can adversely affect brake performance, which could result in death or serious injury. (00054a)

⚠WARNING

Perform routine scheduled brake maintenance. Lack of maintenance at recommended intervals can adversely affect brake performance, which could result in death or serious injury. (00055a)

Harley-Davidson has equipped your new motorcycle with the optimum brake pad friction material available. It is selected to give the best performance possible under dry or wet conditions and at high operating temperatures. It exceeds all regulatory requirements currently in effect. However, during some braking conditions you may experience noise. This is normal for this friction material.

⚠WARNING

Be sure wheel and brake caliper are aligned. Riding with a misaligned wheel or brake caliper can cause the brake disc to bind and lead to loss of control, which could result in death or serious injury. (00050a)

1. Check the rear brake disc as it spins. The disc should run true in the brake caliper.
2. See Brake Friction Material. Using a thin plastic ruler, measure the thickness of the brake pad friction material. For rear brakes, place the ruler against the brake disc through the space alongside the caliper.

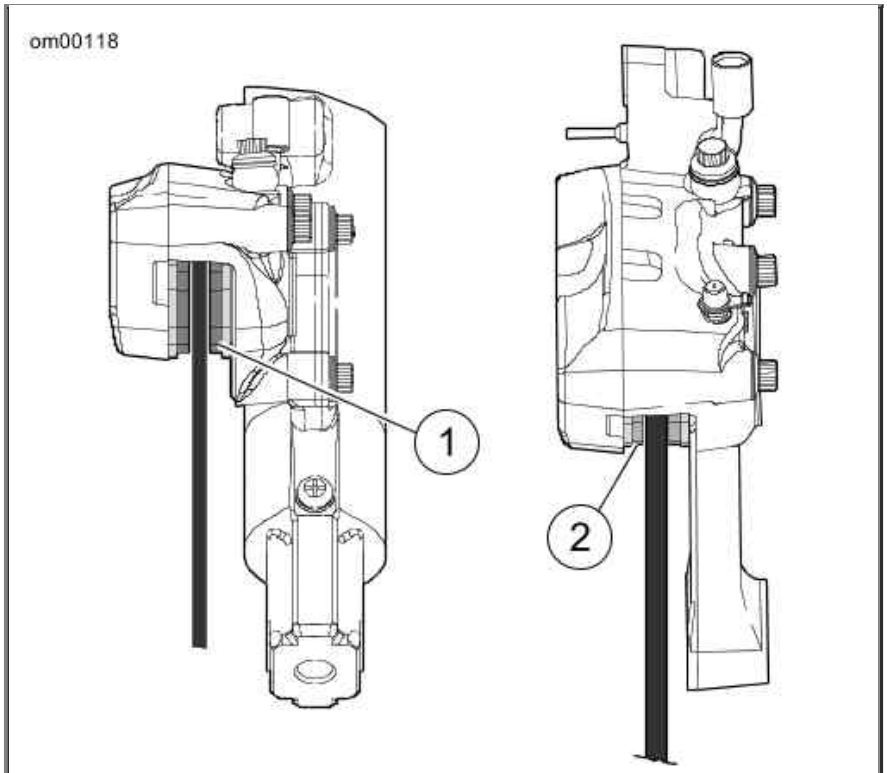

1. Front, from below
2. Rear, from above

Brake Friction Material

3. If the brake pad friction material is at the minimum thickness or less, replace the pads. Always replace brake pads in pairs. See a Harley-Davidson dealer. Refer to Minimum Brake Pad Friction Material Thickness.

Minimum Brake Pad Friction Material Thickness

in	mm
0.040	1.02

Tires

- Refer to Specified Tires for specified tires and pressures.
- Be sure to keep tires properly inflated.
- Follow tire data for correct cold tire inflation pressures.
- Check before riding when tires are cold.
- Do not over-inflate tires.

⚠WARNING

Match tires, tubes, rim strips or seals, air valves and caps to the correct wheel. Contact a Harley-Davidson dealer. Mismatching can lead to tire damage, allow tire slippage on the wheel or cause tire failure, which could result in death or serious injury. (00023c)

Check inflation pressure and inspect tread for punctures, cuts, breaks, etc., at least weekly if in daily use. Check before each trip if used occasionally.

⚠WARNING

Be sure tires are properly inflated, balanced, undamaged,

and have adequate tread. Inspect your tires regularly and see a Harley-Davidson dealer for replacements. Riding with excessively worn, unbalanced, improperly inflated, overloaded or damaged tires can lead to tire failure and adversely affect stability and handling, which could result in death or serious injury. (00014b)

Same as original equipment tires should be used. Other tires may not fit correctly, could adversely affect handling, and may be hazardous to use.

⚠WARNING

Tires are a critical safety component. Contact a Harley-Davidson dealer for tire repair or replacement. Improper tire service can adversely affect stability and handling, which could result in death or serious injury. (00057a)

⚠WARNING

Replace punctured or damaged tires. In some cases, small punctures in the tread area may be repaired from within the removed tire by a Harley-Davidson dealer. Speed should NOT exceed 50 mph (80 km/h) for the first 24 hours after repair, and the repaired tire should NEVER be used over 80 mph (130 km/h). Failure to follow this warning could lead to tire failure and result in death or serious injury. (00015b)

⚠WARNING

Striking an object, such as a curb or pothole can cause internal tire damage. If an object is struck, have the tire inspected immediately inside and out by a Harley-Davidson dealer. A damaged tire can fail while riding and adversely affect stability and handling, which could result in death or serious injury. (00058b)

Tire Replacement

Tread Wear

⚠WARNING

Replace tire immediately with a Harley-Davidson specified tire when wear bars become visible or only 1/32 in (0.8 mm) tread depth remains. Riding with a worn tire could result in death or serious injury. (00090c)

Harley-Davidson tires are equipped with wear bars that run horizontally across the tread. When a tire is worn to the point that the wear bars are visible, or 1/32 in 0.8 mm tread depth remains, the tire can:

- Be more easily damaged leading to tire failure.
- Provide reduced traction.
- Adversely affect stability and handling.

Replace the tires with **new** tires before the tread wear bars appear:

- See Tread Pattern: Michelin Tires or Tread Pattern: Dunlop Tires. Indicators (1) on

the tire sidewalls point to tread wear bars (2) in the tread.

- Tread wear bars appear in the tread pattern when 1/32 in 0.8 mm or less of tread remains.

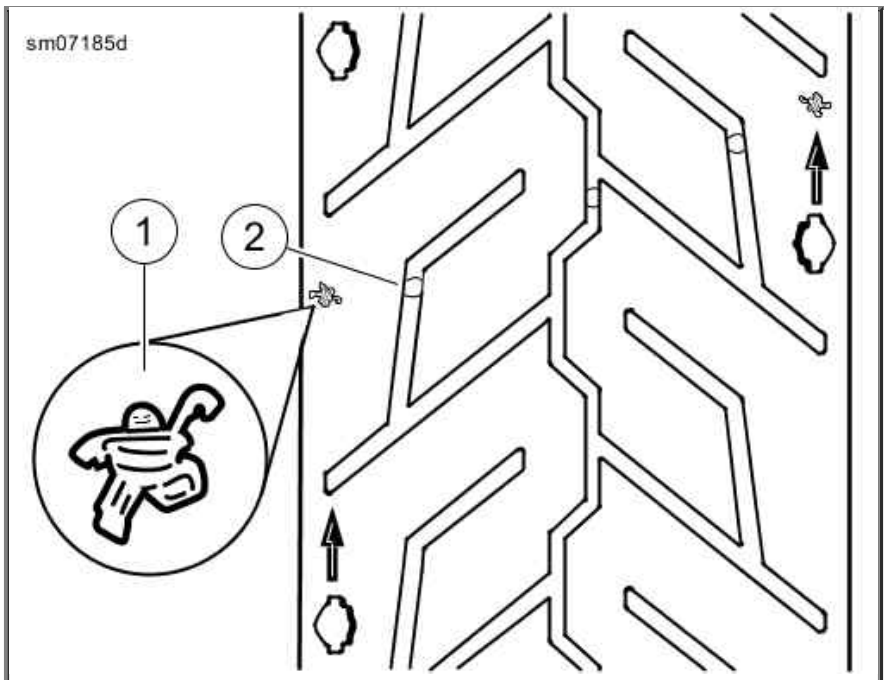

1. Indicator
2. Tread wear bar

Tread Pattern: Michelin Tires

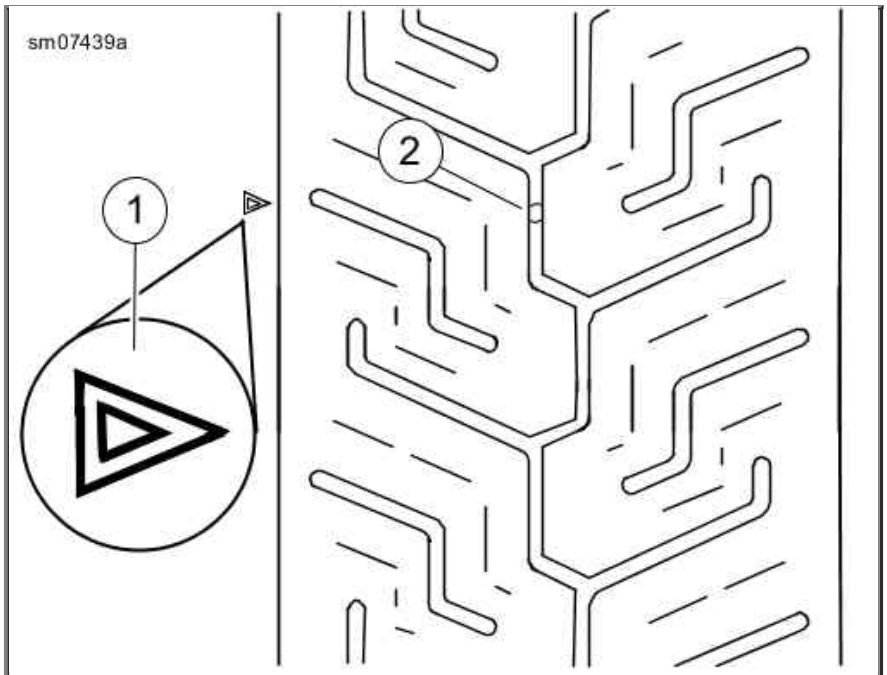

1. Indicator
2. Tread wear bar

Tread Pattern: Dunlop Tires

Tire Damage

Replace tires with **new** tires when:

- Tire cords or fabric are visible through cracked sidewalls, snags or deep cuts.
- A bump, bulge or split is found anywhere on the tire.
- A puncture, cut or other damage cannot be repaired.

Shock Absorbers

Inspect shock absorbers and rubber bushings for leaks and bushing deterioration at proper intervals.

XR 1200X Model

XR 1200X shock absorbers contain pressurized gas. Visually inspect the shock absorbers while observing the following precautions.

⚠WARNING

Shock absorber cannot be serviced. Attempting service can cause an explosion, which could result in death or serious injury. (00602d)

- Do not refill, disassemble, puncture or expose shock to flames.
- Replacement and disposal should only be done by an authorized Harley-Davidson dealer.

Spark Plugs

⚠WARNING

Disconnecting spark plug cable with engine running can result in electric shock and death or serious injury. (00464b)

⚠CAUTION

Do NOT pull on any electrical wires. Pulling on electrical wires may damage the internal conductor causing high resistance, which may result in minor or moderate injury. (00168a)

Check the spark plugs at proper intervals. Refer to Regular Service Intervals: 2013 Sportster Models.

1. Disconnect spark plug cables from plugs by pulling up on the molded connector caps.
2. Check spark plug type. Only use those spark plugs specified for your model motorcycle.
3. Check spark plug gap against specifications table.

   NOTE:

   *If a torque wrench is not available, tighten **new** spark plugs finger-tight and then tighten an additional one-quarter turn with a spark plug wrench.*

4. Always tighten to the proper torque. Spark plugs must be tightened to the torque specified for proper heat transfer. Refer to Electrical: XL Models or Electrical: XR 1200X.
5. Connect each molded connector cap until the cap snaps firmly into place over the spark plug.

Ignition

The engine in your motorcycle has been designed specifically to achieve optimum fuel economy within exhaust emission controls. Factory programmed ignition characteristics provide maximum engine performance and driveability.

Air Cleaner

XL Models: Removal

CAUTION

Install air filter before running engine. Failure to do so can draw debris into the engine and could result in engine damage. (00207a)

NOTES:

- *At regular intervals, inspect the air filter element. Under dusty conditions, inspect more often. Refer to Regular Service Intervals: 2013 Sportster Models.*
- ***XL Models except XL 1200V:*** *See Air Cleaner: XL Models except XL 1200V.*
- ***XL 1200V:*** *See Air Cleaner: XL 1200V.*

1. Remove the cover screw(s), trim (except XL 1200V) and the air cleaner cover.
2. Inspect the filter element.
3. Remove and clean the air filter element if necessary.

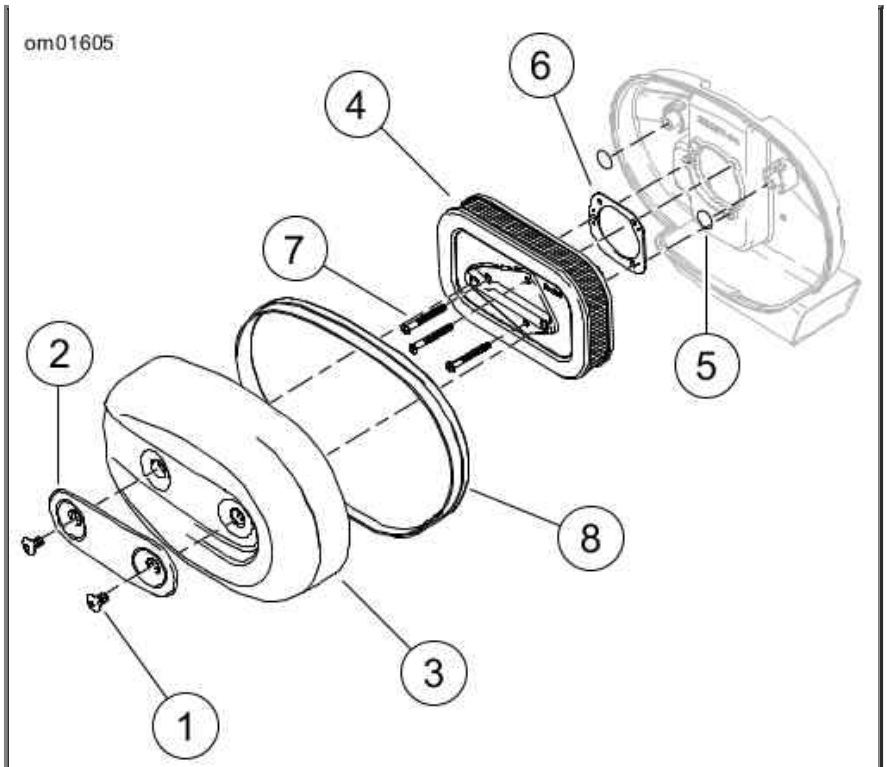

1. Cover screw (2)
2. Trim
3. Cover
4. Filter element
5. O-ring (2)
6. Gasket
7. Element screw (3)
8. Seal

Air Cleaner: XL Models except XL 1200V

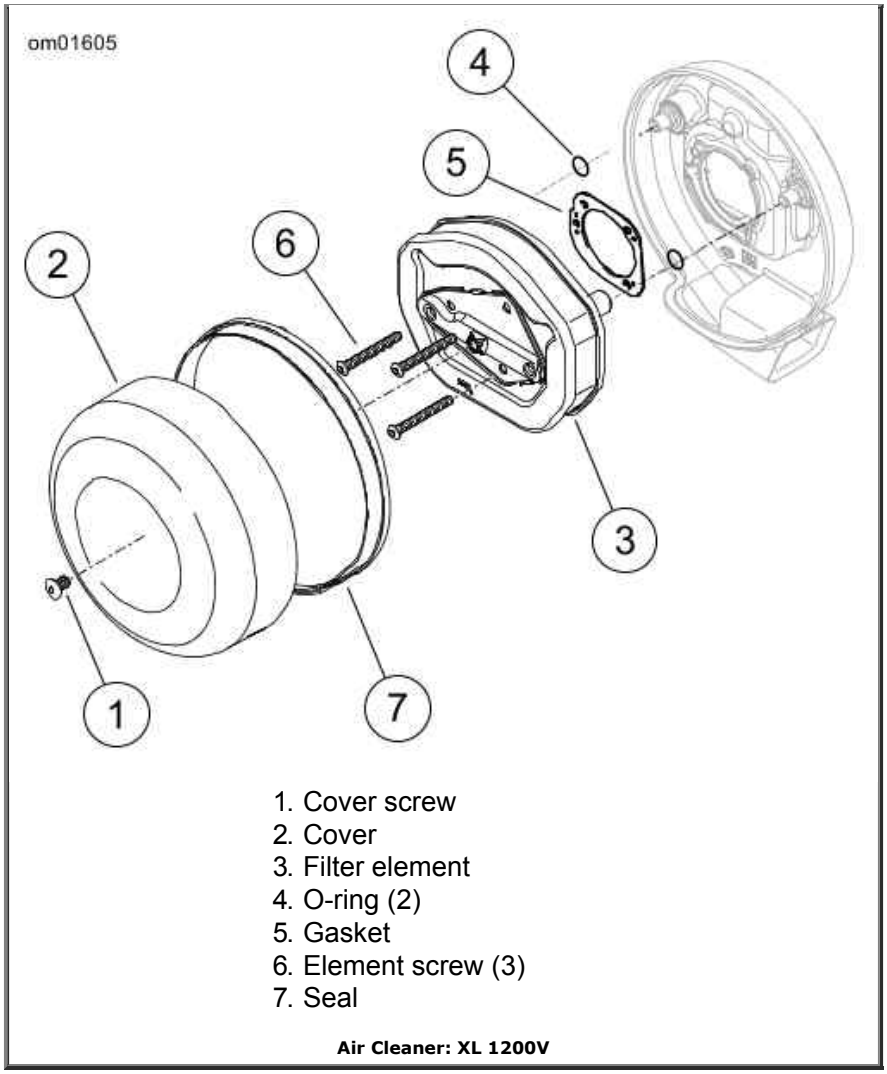

Cleaning Filter Element

⚠WARNING

Do not use gasoline or solvents to clean filter element. Flammable cleaning agents can cause an intake system fire, which could result in death or serious injury. (00101a)

NOTES:

- *Do not tap the filter on a hard surface to dislodge dirt.*
- *Replace the filter element if damaged or if the element cannot be cleaned.*

1. Wash the filter in warm soapy water.

   NOTE:

   The filter is clean if light is visible through it.

2. Hold the filter up to a light.

   NOTE:

   Do NOT use air cleaner filter oil on the paper/wire mesh element.

⚠WARNING

Compressed air can pierce the skin and flying debris from compressed air could cause serious eye injury. Wear safety glasses when working with compressed air. Never

use your hand to check for air leaks or to determine air flow rates. (00061a)

3. Air dry or blow dry the filter from the inside with low pressure air.

XL Models: Installation

Air Cleaner Fastener Torque: All XL Models

FASTENER	TORQUE
Air filter element screws	40-60 in-lbs (4.5-6.8 Nm)
Air filter cover screw	36-60 in-lbs (4.1-6.8 Nm)

NOTE:

Check that the O-rings on the breather tubes are in place.

1. If removed, install the baseplate gasket and the air filter element with the screws. Tighten to specification. Refer to Air Cleaner Fastener Torque: All XL Models.
2. Install the air cleaner cover with the air cleaner seal.
3. Apply a drop of LOCTITE THREADLOCKER 243 (blue) to the threads of the cover screw(s).
4. Install the trim (except XL 1200V) and the screw(s). Tighten to specification. Refer to Air Cleaner Fastener Torque: All XL Models.

XR 1200X

Remove all debris from the air cleaner cover inlet. See a Harley-Davidson dealer or service manual at specified intervals for filter element inspection or replacement. Under dusty conditions, inspect more often. Refer to Regular Service Intervals: 2013 Sportster Models.

Headlamp Bulb

Removal

CAUTION

When replacement is required, use only the specified sealed beam unit or bulb, available from a Harley-Davidson dealer. An improper wattage sealed beam or bulb, can cause charging system problems. (00209a)

⚠WARNING

To prevent accidental vehicle start-up, which could cause death or serious injury, remove main fuse before proceeding. (00251b)

1. Remove main fuse. See Fuses and Relays.
2. Remove the trim ring.
   a. **XL 883L/N/R, XL 1200X, XR 1200X:** See Headlamp Assembly: XL 883L/N/R, XL 1200X, XR 1200X. Remove screw (1), nut (2) and headlamp trim ring (3). Refer to Legend Headlamp Assembly: XL 883L/N/R, XL 1200V, XR 1200X.

b. **XL 1200V/C/C ANV/CP/CA/CB:** See Headlamp: XL 1200V/C/C ANV/CP/CA/CB. Remove screw (1) and headlamp trim ring (2). Refer to Headlamp Legend: XL 1200V/C/C ANV/CP/CA/CB.

3. Hold headlamp reflector/lens and compress release tabs on sides of bulb connector (11) to pull connector from the bulb (7) spade terminals.

4. Remove headlamp lens and metal adapter ring.

5. Pull rubber boot from back of the lens.

6. Press ends of retaining clip (8) to unhook from notched retaining tabs and pivot retaining clip back.

7. Remove the bulb.

Installation

⚠WARNING

Handle bulb carefully and wear eye protection. Bulb contains gas under pressure, which, if not handled carefully, could cause serious eye injury. (00062b)

CAUTION

Never touch the quartz bulb. Fingerprints will etch the glass and decrease bulb life. Handle the bulb with paper or a clean, dry cloth. Failure to do so could result in bulb damage. (00210b)

1. Install the replacement bulb.

   NOTE:

   Fit the tab opposite the center spade connector of bulb to the top notch in the reflector.

2. Pivot the retaining clip over the bulb and press the ends into the retaining post.

3. Install rubber boot with word TOP over top notch.

4. Press center ring down flush with base of bulb. Press air out of boot to seal bore of boot to bulb.

   NOTE:

   Air will enter the rubber boot and raise the center ring above bottom of bulb.

5. Connect the bulb connector to the bulb.

6. Install the lens.

   a. **XL 883L/N/R, XL 1200X, XR 1200X:** Fit the adapter ring and the reflector/lens to the headlamp shell.

   b. **XL 1200V/C/CP/CA/CB:** With the finger gasket in place, fit the adapter ring and the reflector/lens to the headlamp shell.

   NOTES:
   - *Fit the two notches on the circumference of the adapter ring to the two bulges on rim of headlamp shell.*
   - *Fit the single tab on the circumference of the reflector to the notch on the inside of the adapter ring.*

7. Rotate the trim ring clockwise to lock down on the reflector/lens. Install the trim ring screw,

nut as necessary and tighten.

8. Install the main fuse.

⚠WARNING

Be sure that all lights and switches operate properly before operating motorcycle. Low visibility of rider can result in death or serious injury. (00316a)

9. Test operation of the headlamp.
10. Align the headlamp. See Headlamp Alignment.

Position Lamp: HDI

1. Replace the position lamp if necessary.
2. Pull the spade connectors from the bulb holder.
3. Pull the bulb holder from the reflector/lens.
4. Quarter turn the bulb to remove and replace.
5. Replace the bulb holder and mate connectors.

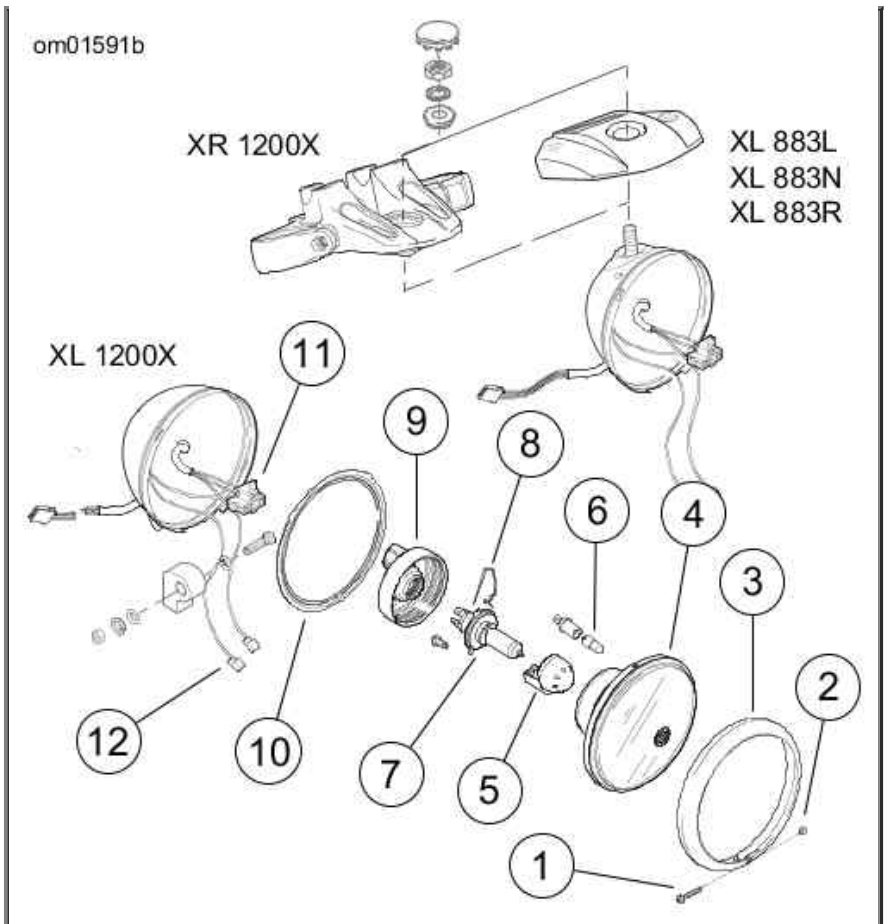

Headlamp Assembly: XL 883L/N/R, XL 1200X, XR 1200X

Legend Headlamp Assembly: XL 883L/N/R, XL 1200V, XR 1200X

LEGEND NO.	COMPONENT
1	Screw
2	Nut
3	Trim ring

4	Lens
5	Bulb shield
6	Position lamp (HDI models)
7	Wire clip
7	Bulb
8	Wire clip
9	Rubber boot
10	Adapter ring
11	Connector [5]
12	Position lamp connectors HDI models

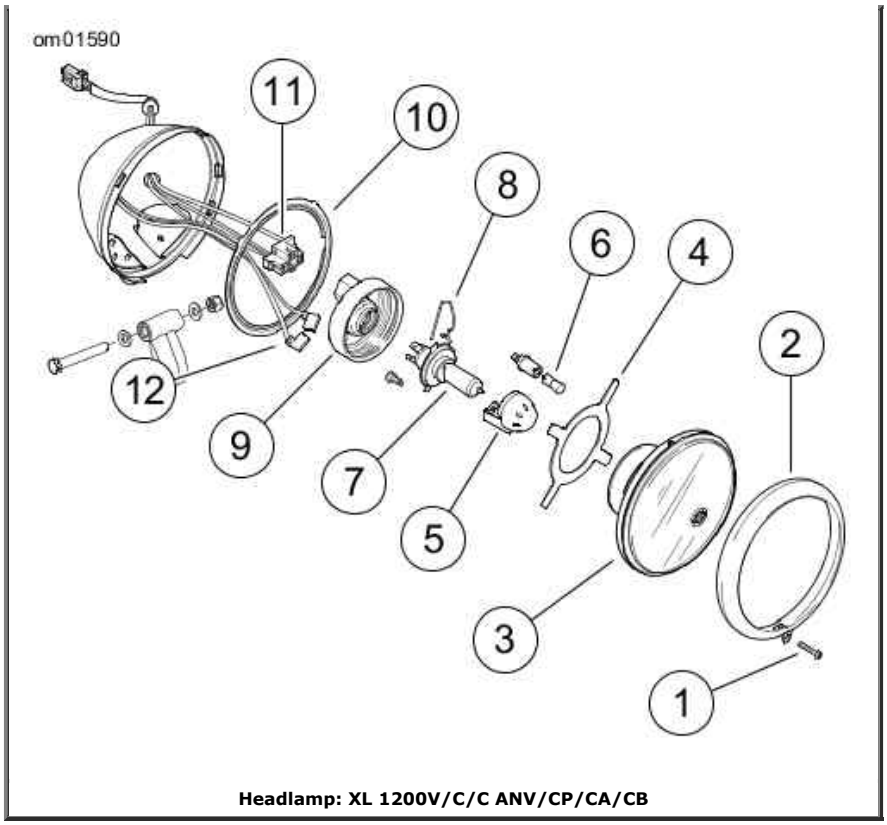

Headlamp: XL 1200V/C/C ANV/CP/CA/CB

Headlamp Legend: XL 1200V/C/C ANV/CP/CA/CB

LEGEND NO.	COMPONENT
1	Screw
2	Trim ring
3	Lens
4	Finger gasket
5	Bulb shield
6	Position lamp (HDI models)
7	Bulb
8	Wire clip
9	Rubber boot
10	Adapter ring
11	Connector [5]
12	Position lamp connectors HDI models

Headlamp Alignment

⚠WARNING

The automatic-on headlamp feature provides increased visibility of the rider to other motorists. Be sure headlamp is on at all times. Poor visibility of rider to other motorists can result in death or serious injury. (00030b)

NOTE:

Adjust the headlamps of motorcycles with multiple beam headlamps to converge into one pattern.

1. Check the tire pressure.
2. Adjust the rear shocks for the rider and intended load.
3. Fill fuel tank or add an equal amount of ballast.

   NOTE:

   Choose a wall in minimum light.

4. See Headlamp Alignment: Sportster Models. Park the motorcycle in a line (1) perpendicular to the wall.
5. Position motorcycle so that front axle is 25 ft 7.6 m from wall.
6. Draw a vertical line (2) on the wall.
7. With the motorcycle loaded, point the front wheel straight forward at wall. Measure the distance (4) from the floor to the center of the high beam bulb.
8. Draw a horizontal line (5) through the vertical line on the wall. Place line 2.1 in 53.3 mm lower than the measured bulb centerline.

   NOTE:

   The headlamp is aligned when the light beam hot spot is centered over the intersection of the lines.

9. Verify headlamp alignment. Adjust as necessary.

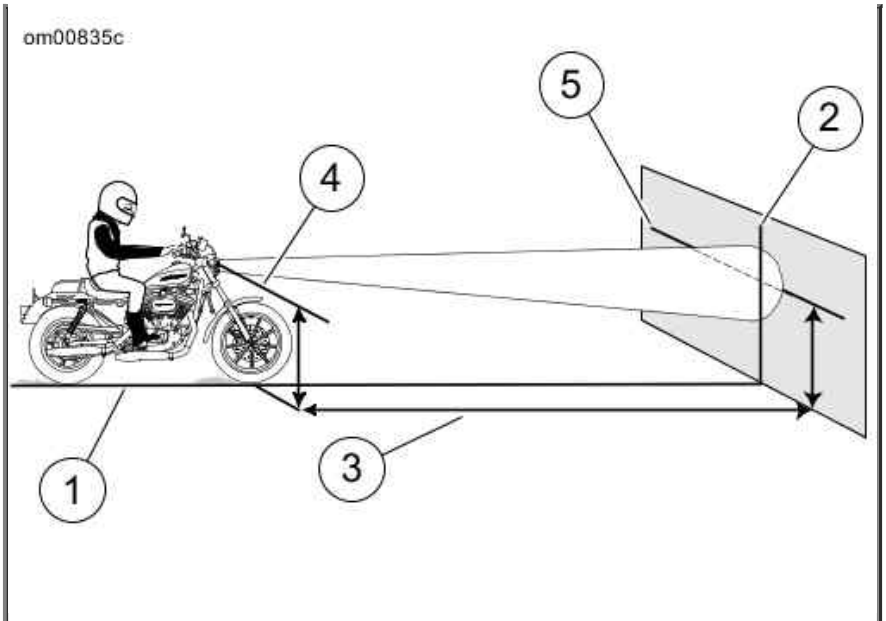

1. Perpendicular line
2. Vertical line
3. 25 ft (7.6 m)
4. High beam bulb centerline
5. Horizontal line 2.1 in (53.3 mm) lower than bulb centerline

Headlamp Alignment: Sportster Models

Headlamp: Adjustment

Adjustment: XL 1200X/C/C ANV/CP/CA/CB/V

1. Set horizontal adjustment:
   a. See Headlamp Adjustment: XL 1200X/C/C ANV/CP/CA/CB/V. Loosen the horizontal adjustment screw (3).
   b. Turn the headlamp right or left as necessary to direct the light beam straight ahead.
   c. Tighten the horizontal adjustment screw to 30-35 ft-lbs (40.7-47.5 Nm).
2. Set vertical adjustment:
   a. Loosen the locknut (1) for the vertical adjustment bolt.
   b. Tilt headlamp up or down to properly aim it at the horizontal line on the wall.
   c. Tighten headlamp locknut to 30-35 ft-lbs (40.7-47.5 Nm).

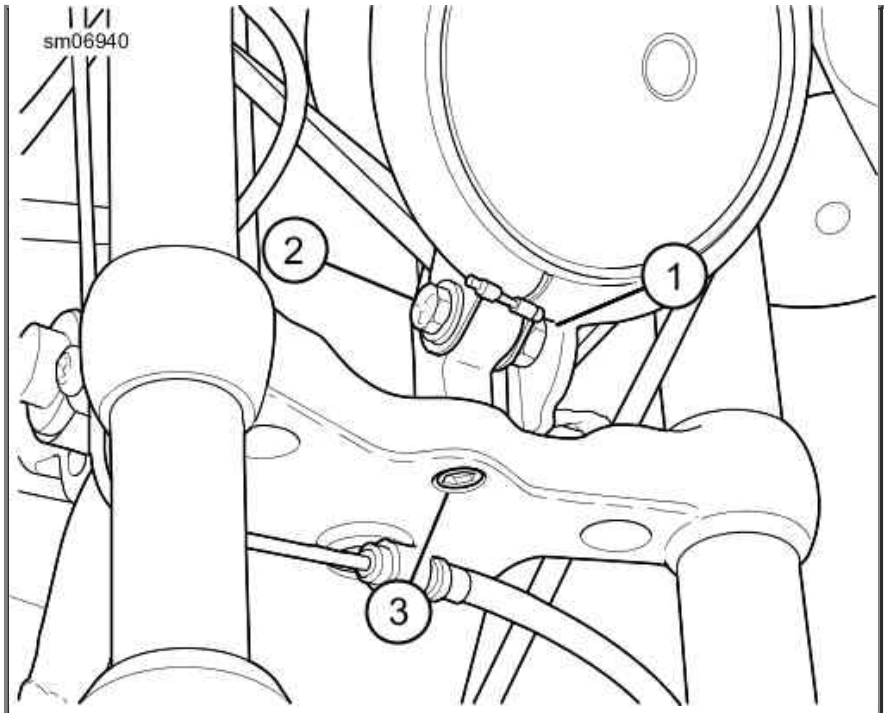

1. Locknut
2. Vertical adjustment bolt
3. Horizontal adjustment screw

Headlamp Adjustment: XL 1200X/C/C ANV/CP/CA/CB/V

Adjustment: XL 883R/L/N, XR 1200X

1. See Headlamp Adjustment: XL 883R/L/N, XR 1200X (XR 1200X shown). Remove snap plug (1) on top of headlamp bracket (2).
2. Loosen headlamp clamp nut (3).
3. Tilt headlamp up or down to properly aim it in relation to the horizontal line and, at the same time, turn it right or left to direct light beam straight ahead.
4. Tighten headlamp clamp nut to 120-240 in-lbs (14-27 Nm) after lamp is properly positioned.
5. Install snap plug in headlamp bracket.

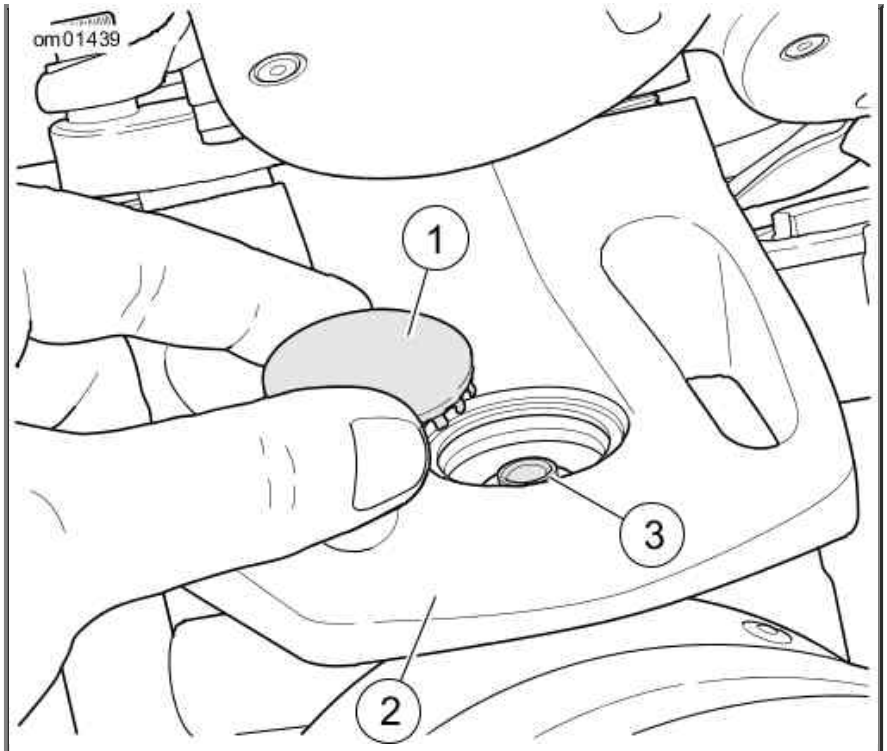

1. Snap plug
2. Headlamp bracket
3. Clamp nut

Headlamp Adjustment: XL 883R/L/N, XR 1200X (XR 1200X shown)

Turn Signal Bulb Replacement: Bullet Style

1. See Remove Lens. Insert a coin or the blade of a small screwdriver into the notch at the bottom of the lens cap. Carefully twist until the lens cap pops out of the lamp housing.
2. Push bulb in and rotate counterclockwise. Pull bulb from socket.
3. Inspect condition of electrical contacts in socket. If necessary, clean with a small wire brush and electrical contact cleaner.
4. Apply ELECTRICAL CONTACT LUBRICANT to contacts in socket and at bottom of **new** bulb.
5. Align pins on **new** bulb with pin guides in bulb socket. Push bulb in and turn clockwise to lock in place.
6. Snap lens cap onto the lamp housing with notch at bottom.

⚠WARNING

Be sure that all lights and switches operate properly before operating motorcycle. Low visibility of rider can result in death or serious injury. (00316a)

7. Test lamp operation.

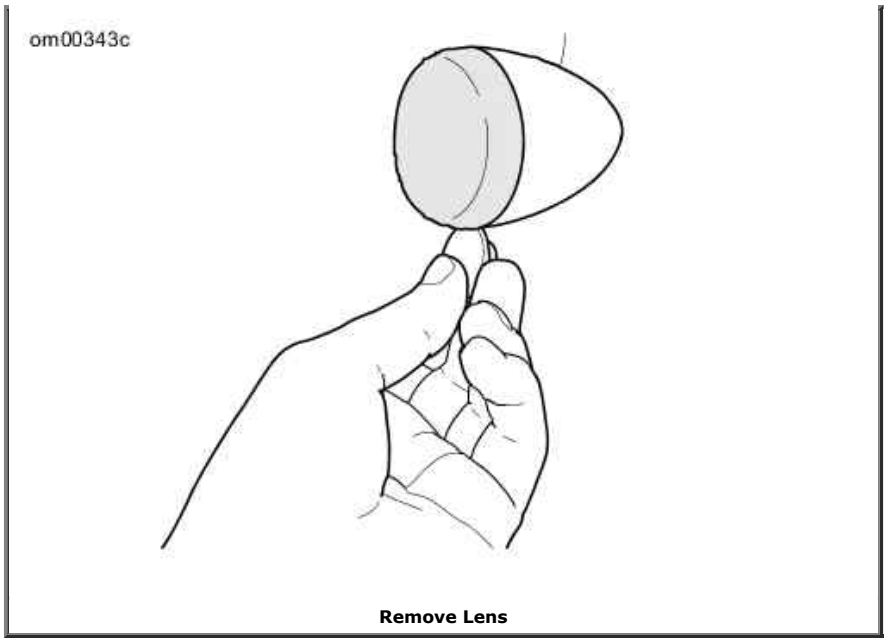

Remove Lens

Tail Lamp Bulb Replacement

XL 883R/L, XR 1200X and Models with Standard Style Tail Lamp

1. Turn ignition switch OFF.
2. See Tail Lamp Assembly. Remove two screws and lens from base.

   NOTE:

   Remove the 4-pin connector to ease bulb removal.
3. Pull bulb assembly from lens. Remove bulb from socket.
4. Coat base of **new** bulb with ELECTRICAL CONTACT GREASE. Install **new** bulb in socket.
5. Install (push) bulb assembly to lens.
6. If removed, connect [93] connector to circuit board.
7. Install lens to base with two screws. Tighten to 20-24 in-lbs (2.3-2.7 Nm).

⚠WARNING

Be sure that all lights and switches operate properly before operating motorcycle. Low visibility of rider can result in death or serious injury. (00316a)

8. Turn ignition on. Test for proper tail lamp operation.

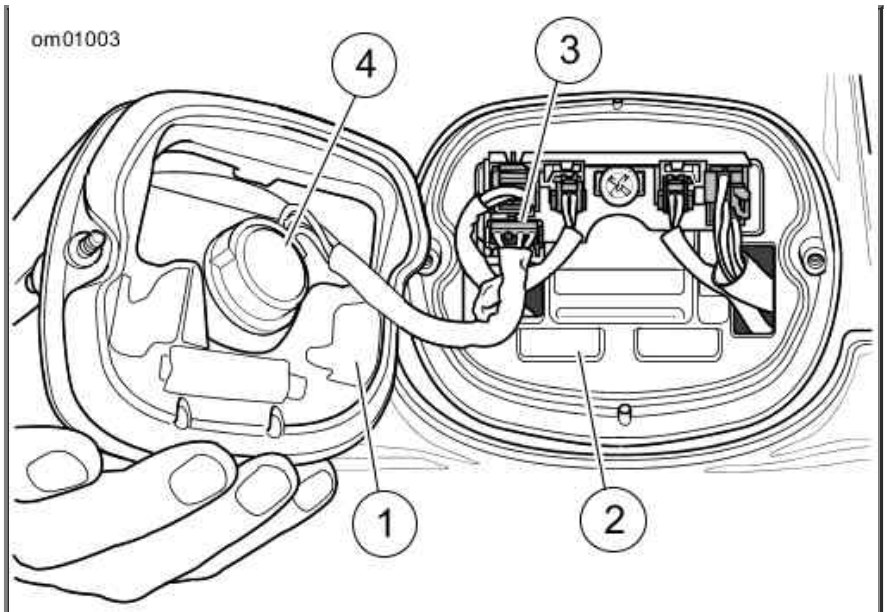

1. Lens
2. Base
3. 4-pin multilock connector
4. Bulb socket

Tail Lamp Assembly

XL 1200C/C ANV/CP/CA/CB

Though similar in appearance to the standard style tail lamp, the tail lamp on XL 1200C/C ANV/CP/CA/CB models is an LED assembly. See a dealer or service manual for replacement.

XL 883N and XL 1200X/V

The tail and stop lamps are dual filament turn bulbs in the rear turn signal bullet housings with red lenses. To replace a tail or stop lamp, replace the turn signal bulbs. See Turn Signal Bulb Replacement: Bullet Style.

XL 883N and XL 1200X/V Models with LED Turn Signal Tail and Stop Lamps

On International and Japanese XL 883N and XL 1200X/V models, the rear turn signal/tail lamps are LED assemblies. There are not replacement bulbs for this style lamp. The caps on the rear turn signals are not removeable. See a dealer or service manual for assembly replacement.

Due to local regulations, this feature may not be found in all destinations.

Alternator/Voltage Regulator

Charging Rate

The alternator output is controlled and changed to direct current by the voltage regulator.

- The voltage regulator increases charging rate when battery is low or lamps are lit.
- The voltage regulator decreases charging rate when battery charge is up.

CAUTION

It is possible to overload your vehicle's charging system

by adding too many electrical accessories. If the combined electrical accessories operating at any one time consume more electrical current than the vehicle's charging system can produce, the electrical consumption can discharge the battery and cause damage to the vehicle's electrical system. See an authorized Harley-Davidson dealer for advice about the amount of current consumed by additional electrical accessories or for necessary wiring changes. (00211c)

NOTES:

- *This unit requires no interval attention. If any electrical system trouble is experienced that might be traceable to the alternator or voltage regulator, the motorcycle should be taken to a Harley-Davidson dealer who has the necessary electrical testing equipment to give the required attention.*
- *For model specific information regarding the voltage regulator, refer to the appropriate Service Manual or see a Harley-Davidson dealer.*

Left Side Cover

The left side cover provides access to the main fuse holder, battery and fuse/relay block. No tools are required to remove or install the side cover.

Opening

NOTES:

- *The left side cover does not need to be completely removed from the vehicle to access the battery or fuses.*
- *Place a shop cloth or other clean, dry cloth over rear brake master cylinder reservoir and left passenger foot peg (if applicable). This will protect cover from damage.*

1. See Left Side Cover (XL model shown). Grasp left side cover at upper corners and gently pull away from frame. On XL models, disengage the rear clip first for easier opening.

2. While rotating top of cover out away from motorcycle, slide cover down slightly so mounting slot slides down from mounting tab on battery tray.

Closing

1. Raise the left side cover.

2. On XL models, align the barrel clips on the cover with the socket clips on the frame. Press the cover to secure.

3. On the XR 1200X, align the locating pins with the grommets on the frame. Press the cover to secure.

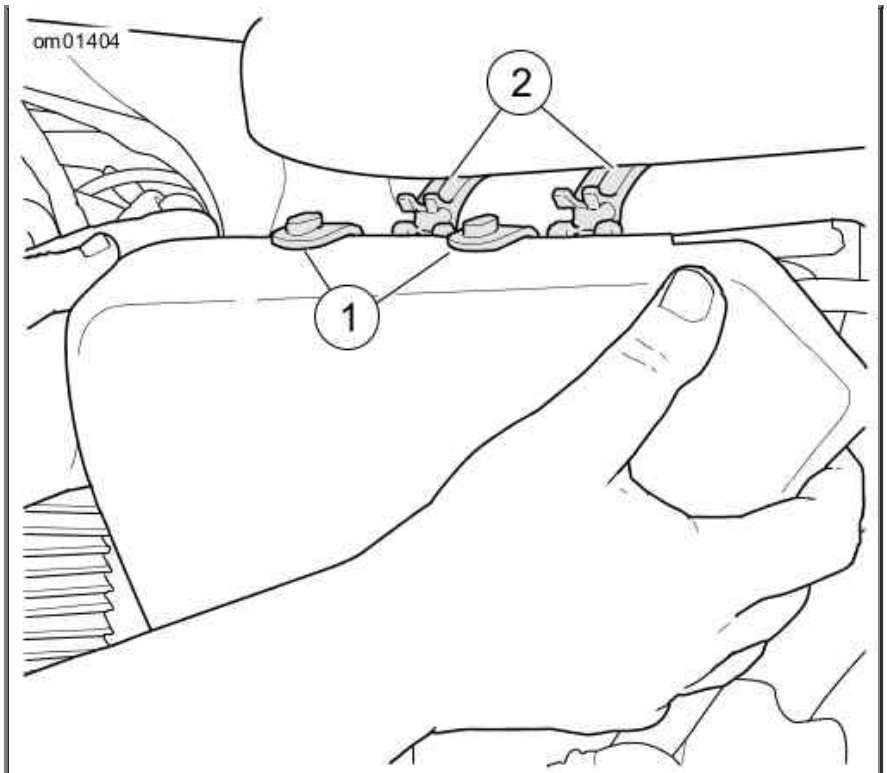

1. Barrel clips on cover
2. Socket clips on frame

Left Side Cover (XL model shown)

Battery

Type

Your motorcycle uses an Absorbed Glass Mat (AGM) battery. The AGM battery is permanently sealed, valve regulated, maintenance-free, lead/calcium and sulfuric acid battery. All batteries are shipped precharged and ready to be put into service. Do not attempt to open the battery for any reason.

Antidotes for Battery Acid

CONTACT	TREATMENT
External	Flush with water.
Internal	Drink large quantities of milk or water, followed by milk of magnesia, vegetable oil or beaten eggs. Get immediate medical attention.
Eyes	Flush with water. Get immediate medical attention.

⚠WARNING

Batteries contain sulfuric acid, which could cause severe burns to eyes and skin. Wear a protective face shield, rubberized gloves and protective clothing when working with batteries. KEEP BATTERIES AWAY FROM CHILDREN. (00063a)

⚠WARNING

Explosive hydrogen gas, which escapes during charging, could cause death or serious injury. Charge battery in a well-ventilated area. Keep open flames, electrical sparks and smoking materials away from battery at all times. KEEP BATTERIES AWAY FROM CHILDREN. (00065a)

⚠WARNING

Batteries, battery posts, terminals and related accessories contain lead and lead compounds, and other chemicals known to the State of California to cause cancer, and birth defects or other reproductive harm. Wash hands after handling. (00019e)

⚠WARNING

Never remove warning label attached to top of battery. Failure to read and understand all precautions contained in warning, could result in death or serious injury. (00064a)

1. Contents are corrosive
2. Wear safety glasses
3. Contents are explosive
4. Keep flames away
5. Read instructions
6. Keep away from children

Battery Warning Label

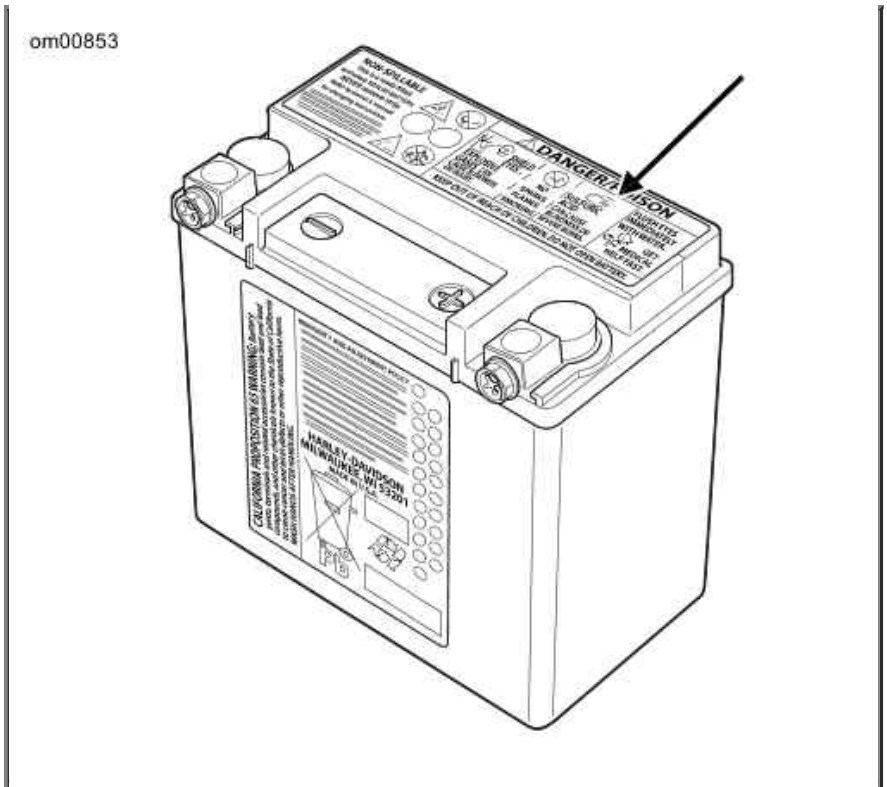

Battery Warning Label

Voltmeter Test

The voltmeter test provides a general indicator of battery condition. Check the voltage of the battery to verify that it is in a 100 percent fully-charged condition. If the open circuit (disconnected) voltage reading is below 12.7 V, charge the battery and then re-check the voltage after the battery has set for one to two hours. Refer to Voltmeter Test.

Voltmeter Test

READING IN VOLTS	PERCENT OF CHARGE
12.7	100
12.6	75
12.3	50
12.0	25
11.8	0

Cleaning and Inspection

Battery top must be clean and dry. Dirt and electrolyte on top of the battery can cause battery to self-discharge.

1. Clean battery top.
2. Clean cable connectors and battery terminals using a wire brush or fine grit sandpaper to remove any oxidation.
3. Inspect and clean the battery screws, clamps and cables. Check for breakage, loose connections and corrosion.
4. Check the battery posts for melting or damage caused by overtightening.
5. Inspect the battery for discoloration, a raised top or a warped or distorted case. This might indicate that the battery has been frozen, overheated or overcharged.

6. Inspect the battery case for cracks or leaks.

Charging

An automatic, constant monitoring battery charger/tender with a charging rate of 5 amps or less at less than 14.6 volts is recommended. The use of constant current chargers (including trickle chargers) to charge sealed AGM batteries is not recommended. Any overcharge will cause dry-out and premature battery failure. Never charge a battery without first reviewing the instructions for the charger being used. In addition to the manufacturer's instructions, follow these general safety precautions.

Charge the battery if any of the following conditions exist:

- Vehicle lamps appear dim.
- Electric starter sounds weak.
- Battery has not been used for an extended period of time.

⚠WARNING

Explosive hydrogen gas, which escapes during charging, could cause death or serious injury. Charge battery in a well-ventilated area. Keep open flames, electrical sparks and smoking materials away from battery at all times. KEEP BATTERIES AWAY FROM CHILDREN. (00065a)

⚠WARNING

Batteries contain sulfuric acid, which could cause severe burns to eyes and skin. Wear a protective face shield, rubberized gloves and protective clothing when working with batteries. KEEP BATTERIES AWAY FROM CHILDREN. (00063a)

1. Perform a voltmeter test to determine the state of charge. If battery needs to be charged, proceed to the next step.

2. Place the battery on a level surface.

⚠WARNING

Unplug or turn OFF battery charger before connecting charger cables to battery. Connecting cables with charger ON can cause a spark and battery explosion, which could result in death or serious injury. (00066a)

⚠WARNING

Connect positive (+) battery cable first. If positive (+) cable should contact ground with negative (-) cable connected, the resulting sparks can cause a battery explosion, which could result in death or serious injury. (00068a)

⚠WARNING

Disconnect negative (-) battery cable first. If positive (+) cable should contact ground with negative (-) cable connected, the resulting sparks can cause a battery explosion, which could result in death or serious injury. (00049a)

CAUTION

Do not reverse the charger connections described in the following steps or the charging system of the motorcycle could be damaged. (00214a)

NOTES:

- *Do not use chargers with excessively high voltage designed for flooded batteries or excessively high current designed for much larger batteries. Charging should be limited to no more than 5 amps at no more than 14.6 volts.*
- *Most automatic, constant monitoring battery chargers are completely automatic and can be left connected to both AC power and to the battery that is being charged. When leaving this type of charger connected for extended periods of time, periodically check the battery to see if it is unusually warm. This is an indication that the battery may have a weak cell or internal short. Read the manufacturers instructions for the charger being used.*

3. Connect the red battery charger lead to positive (+) terminal of the battery.
4. Connect the black battery charger lead to negative (-) terminal of the battery.

   NOTE:

   If the battery is still in the vehicle, connect the negative lead to the chassis ground. Make sure that the ignition and all electrical accessories are turned off.

5. Step away from the battery and turn on the charger.

⚠WARNING

Unplug or turn OFF battery charger before disconnecting charger cables from battery. Disconnecting clamps with charger ON can cause a spark and battery explosion, which could result in death or serious injury. (00067a)

6. After the battery is fully charged, turn OFF the charger and disconnect the black battery charger lead to the negative (-) terminal of the battery.
7. Disconnect the red battery charger lead to the positive (+) terminal of the battery.
8. Mark the charging date on the battery.

Storage

If the motorcycle will not be operated for several weeks, such as during the winter season, remove the battery from the motorcycle and fully charge.

If the motorcycle is to be stored with the battery installed, it will be necessary to connect a automatic, constant monitoring charger/tender to maintain charge. See an authorized dealer for more information.

A battery that is removed from the vehicle is affected by self-discharge. A battery that is stored in the vehicle is affected by both self-discharge and, more significantly, parasitic loads. Parasitic loads occur from things like diode leakage and maintaining computer memory with the vehicle off.

- Batteries self-discharge at a faster rate at higher ambient temperatures.
- To reduce the self-discharge rate, store battery in a cool, dry place.
- Charge the battery every two weeks if stored in the vehicle.
- Charge the battery once per month if stored out of the vehicle.

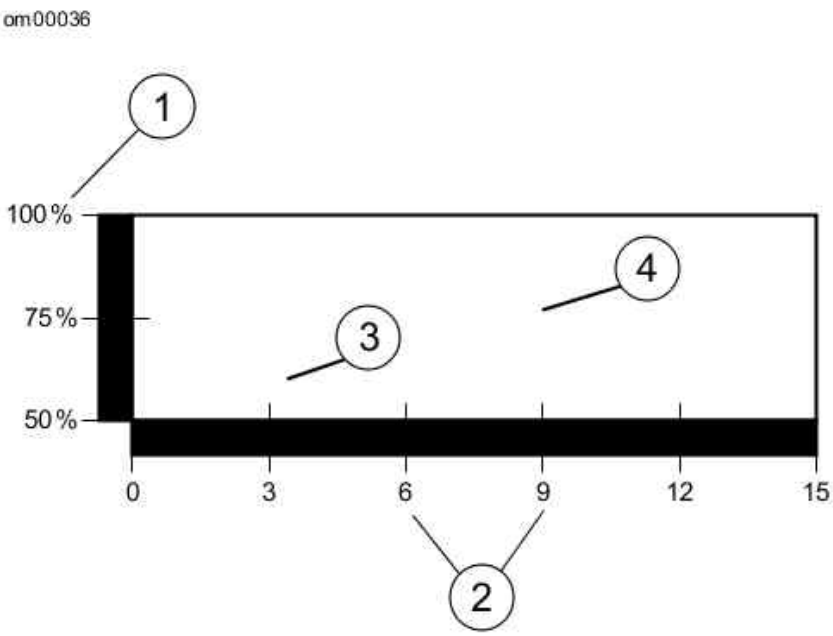

1. Capacity
2. Months of non-use
3. Measured at 105 °F (40 °C)
4. Measured at 77 °F (25 °C)

Effective Rate of Temperature on Battery Self-discharging Rate

Battery Disconnection and Removal

WARNING

Disconnect negative (-) battery cable first. If positive (+) cable should contact ground with negative (-) cable connected, the resulting sparks can cause a battery explosion, which could result in death or serious injury. (00049a)

1. Open left side cover.

   NOTE:

   Models with sirens: *Verify that fob is present and turn ignition key to IGNITION before removing main fuse or disconnecting battery.*

2. See Negative (-) Battery Connection. Using a swivel socket (2), remove nut that secures the negative (-) battery cable (1) connector to ground stud (4) on crankcase boss behind starter motor assembly (3). Remove cable connector from stud.

3. See Negative (-) Battery Cable Holder. Pull end of negative (-) cable (2) forward gently to free it from cable holder (1).

4. See Main Fuse and Battery Location: All Models. Press main fuse holder (1) toward the rear of the motorcycle until it pops off its mounting pin on battery strap (4). Remove main fuse holder from battery strap.

5. Press data link connector (6) toward the rear of the motorcycle until it pops off its mounting pin on battery strap. Remove the connector from battery strap.

6. Remove battery strap screw (5). Unhook battery strap from battery tray mount on top of battery and remove strap.

7. Lift up protective rubber boot covering battery positive (+) terminal (3). Remove screw from

battery positive (+) terminal and remove positive (+) battery cable.

8. Disconnect positive (+) battery cable from cable holder (2).
9. Slide the battery (with attached negative cable) out the left side until the negative battery cable is accessible.
10. Disconnect the negative battery cable at the battery (-) terminal. Leave the cable on the vehicle.
11. Remove battery from battery tray. Note routing of negative (-) battery cable around frame downtube.
12. If battery is to be stored out of the motorcycle, close left side cover.

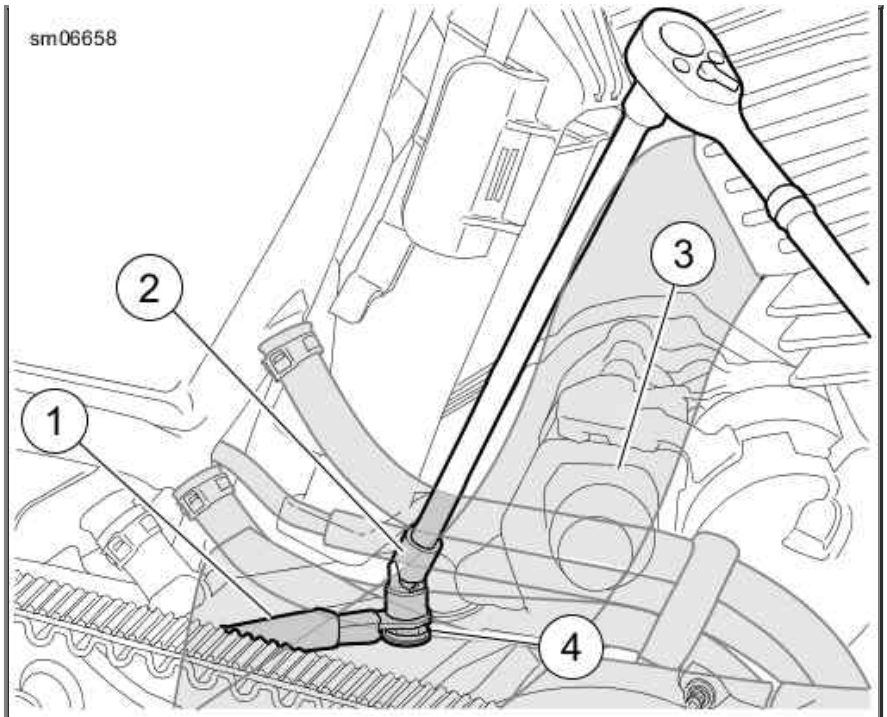

1. Negative (-) battery cable
2. Swivel socket
3. Starter motor assembly
4. Ground stud

Negative (-) Battery Connection

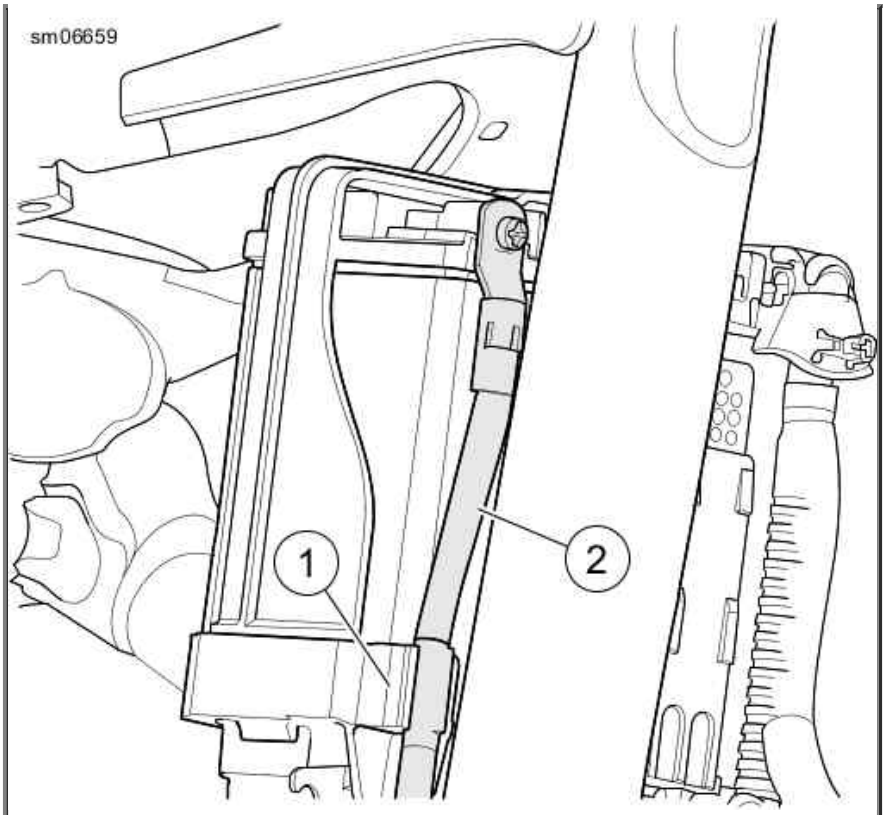

1. Cable holder
2. Negative battery cable

Negative (-) Battery Cable Holder

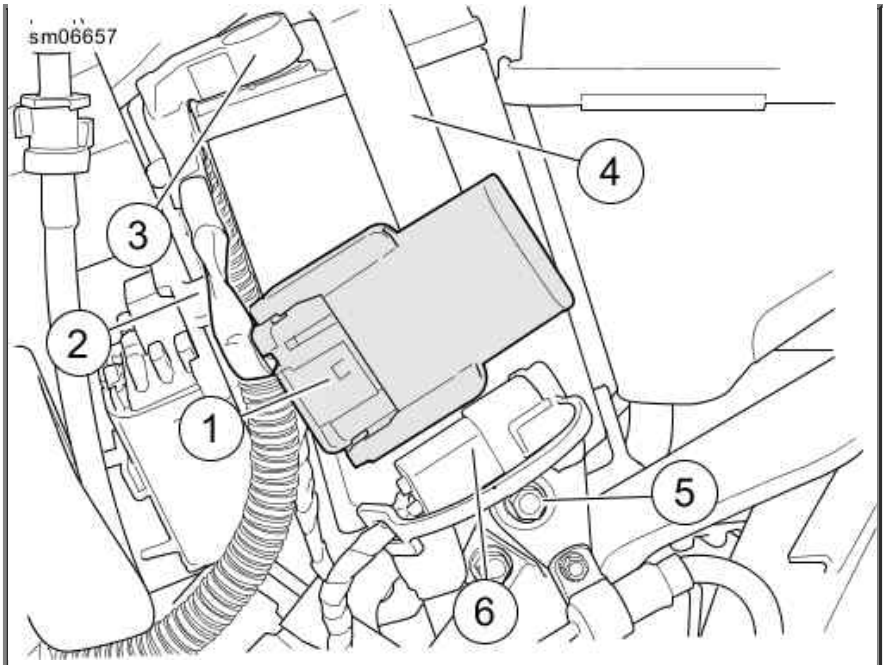

1. Main fuse and holder
2. Positive (+) battery cable holder
3. Positive (+) battery terminal (under protective rubber boot)
4. Battery strap
5. Screw
6. Data link connector

Main Fuse and Battery Location: All Models

Battery Installation and Connection

CAUTION

Connect the cables to the correct battery terminals. Failure

to do so could result in damage to the motorcycle electrical system. (00215a)

1. Open left side cover.
2. Apply a light coat of petroleum jelly or corrosion retardant material to the negative (-) battery terminal.
3. Slide fully charged battery into battery tray.
4. Insert screw through negative battery cable and into negative battery terminal. Thread screw into terminal. Tighten screw to 60-70 in-lbs (6.8-7.9 Nm).
5. Verify that the negative (-) battery cable is disconnected from the ground stud on crankcase.
6. Hook top of battery strap (4) to battery tray mount on top of battery. Install strap screw (5). Tighten to 36-60 in-lbs (4.1-6.8 Nm).
7. Route main positive battery cable through holders on electrical bracket.
8. Hook main fuse holder (1) to top pin on battery strap and slide forward until it snaps into place.
9. Hook data link connector (6) to bottom pin on battery strap and slide forward until it snaps into place.
10. See Negative (-) Battery Cable Holder. Press negative (-) battery cable (2) into cable holder (1).

⚠WARNING

Connect positive (+) battery cable first. If positive (+) cable should contact ground with negative (-) cable connected, the resulting sparks can cause a battery explosion, which could result in death or serious injury. (00068a)

11. See Main Fuse and Battery Location: All Models. With negative battery cable disconnected, insert positive terminal screw through main fuse cable then main positive battery cable. Install screw into positive battery terminal (3). Tighten to 60-70 in-lbs (6.8-7.9 Nm).
12. Apply a light coat of petroleum jelly or corrosion retardant material to the positive (+) battery terminal. Place protective rubber boot over terminal.
13. See Negative (-) Battery Connection. Place negative (-) battery cable connector onto ground stud (4) on crankcase boss behind starter motor assembly (3). Thread nut onto stud.
14. See Attaching Negative (-) Battery Cable to Ground Stud Crankcase: XL Models or Attaching Negative (-) Battery Cable to Ground Stud Crankcase: XR 1200X. Press negative (-) battery cable connector (1) against cable stop (2) on crankcase and tighten nut (3) to 55-75 in-lbs (6.2-8.5 Nm).
15. Close left side cover.

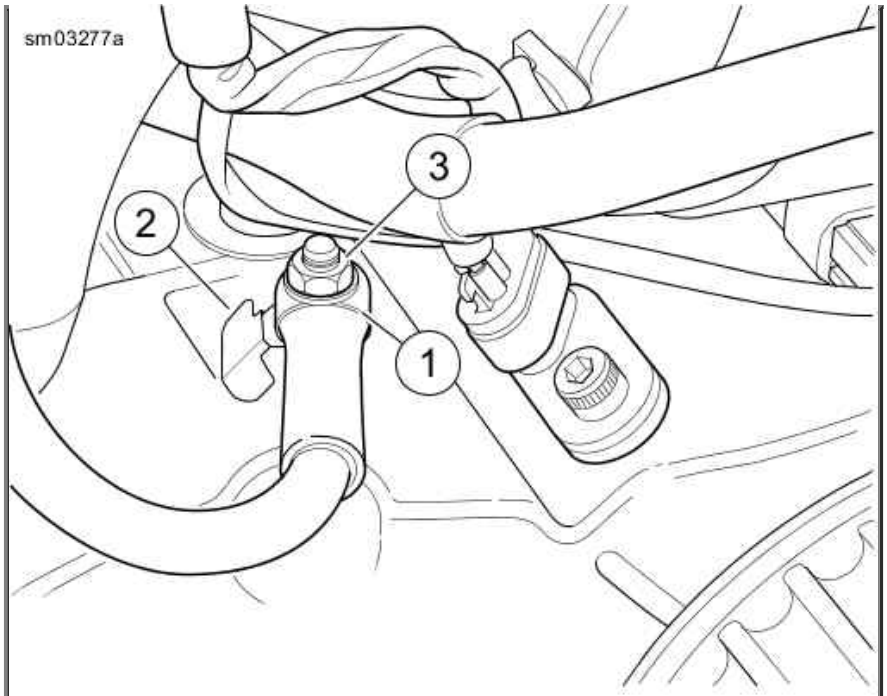

1. Negative battery cable connector
2. Cable stop
3. Nut

Attaching Negative (-) Battery Cable to Ground Stud Crankcase: XL Models

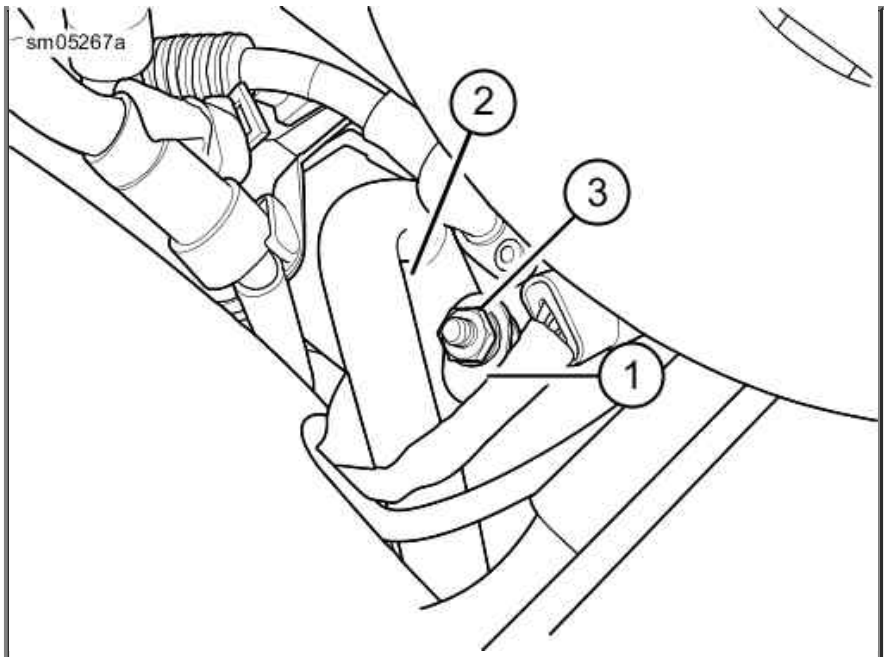

1. Negative battery cable connector
2. Cable stop
3. Nut

Attaching Negative (-) Battery Cable to Ground Stud Crankcase: XR 1200X

Jump Starting

Jump starting a motorcycle is typically not recommended. However, there may be circumstances when it is necessary to do so. If a jump-start is necessary, use the following procedure.

⚠WARNING

Be sure jumper cables touch only appropriate battery

terminals or ground. Allowing jumper cables to touch each other can result in sparks and a battery explosion, which could result in death or serious injury. (00072a)

⚠WARNING

Explosive hydrogen gas, which escapes during charging, could cause death or serious injury. Charge battery in a well-ventilated area. Keep open flames, electrical sparks and smoking materials away from battery at all times. KEEP BATTERIES AWAY FROM CHILDREN. (00065a)

CAUTION

Be sure both vehicles have the same battery voltage when jump starting. Connecting vehicles with different system voltages can result in vehicle damage. (00220c)

NOTES:

- *This procedure presumes the BOOSTER battery is in another vehicle. DO NOT jump start from a running booster vehicle. The high output charging systems on some vehicles can damage the electrical components on the motorcycle.*
- *Make sure the motorcycle and the BOOSTER vehicle are not touching one another.*

1. Turn off all unnecessary lamps and accessories.

Positive Cable

2. See Jump Start Cable Connections. Connect one end of a jumper cable to the DISCHARGED battery positive (+) terminal (1).
3. Connect the other end of the same cable to the BOOSTER battery positive (+) terminal (2).

Negative Cable

⚠WARNING

Do not connect negative (-) cable to or near the discharged battery negative (-) terminal. Doing so could cause a spark and explosion, which could result in death or serious injury. (00073a)

4. Connect one end of a jumper cable to the BOOSTER battery negative (-) terminal (3).

CAUTION

Do not connect the negative (-) cable to painted or chrome parts. Doing so could result in discoloration at the attachment point. (00221a)

5. Connect other end of the same cable (4) to a safe ground, (away from the DISCHARGED battery).
6. Start motorcycle.
7. Disconnect cables in reverse order of Steps 2, 3, 4, 5; that is: Steps 5, 4, 3, 2.

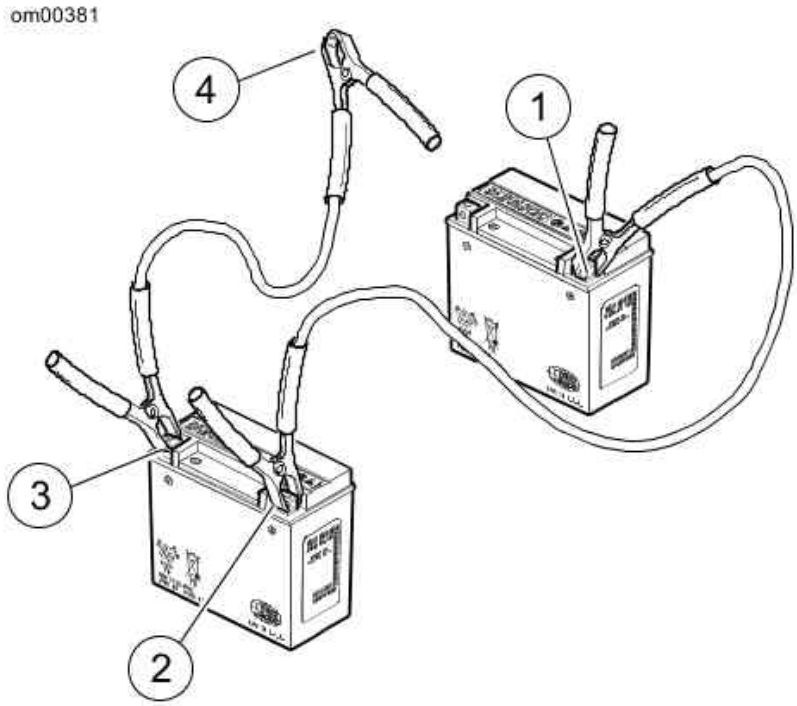

1. Discharged battery positive (+) terminal
2. Booster battery positive (+) terminal
3. Booster battery negative (-) terminal
4. Ground

Jump Start Cable Connections

Fuses and Relays

Fuse Replacement

CAUTION

Always use replacement fuses that are of the correct type and amperage rating. Use of incorrect fuses can result in damage to electrical systems. (00222a)

See Fuse Block. The fuse block is located behind the left side cover.

If replacing a fuse does not correct the problem, or if a fuse is repeatedly blown, see a Harley-Davidson dealer to diagnose any possible electrical problems.

1. Turn the ignition to the OFF position.
2. Open left side cover. See Left Side Cover.
3. See Fuse Block. Push tab to release the fuse block cover.
4. See Relay and Fuse Locations. Remove the suspect fuse and inspect the element.
5. If the element is burned or separated, replace the fuse with a properly rated automotive type ATO fuse.
6. Align fuse block cover with retaining guide. Slide the fuse block cover until tab latches.
7. Close left side cover.

Main Fuse

See Removing/Installing Main Fuse. The 30 amp main fuse can be removed to disconnect power from the motorcycle's entire electrical system (except starter motor/solenoid). The main fuse is located behind the left side cover.

To prevent the security system siren from sounding (if equipped), turn the ignition switch ON with the hands-free fob present to disarm the security system before removing the main fuse.

To remove, grasp the fuse holder in one hand and the plastic body of the main fuse in the other. Pull the main fuse straight out of the fuse holder.

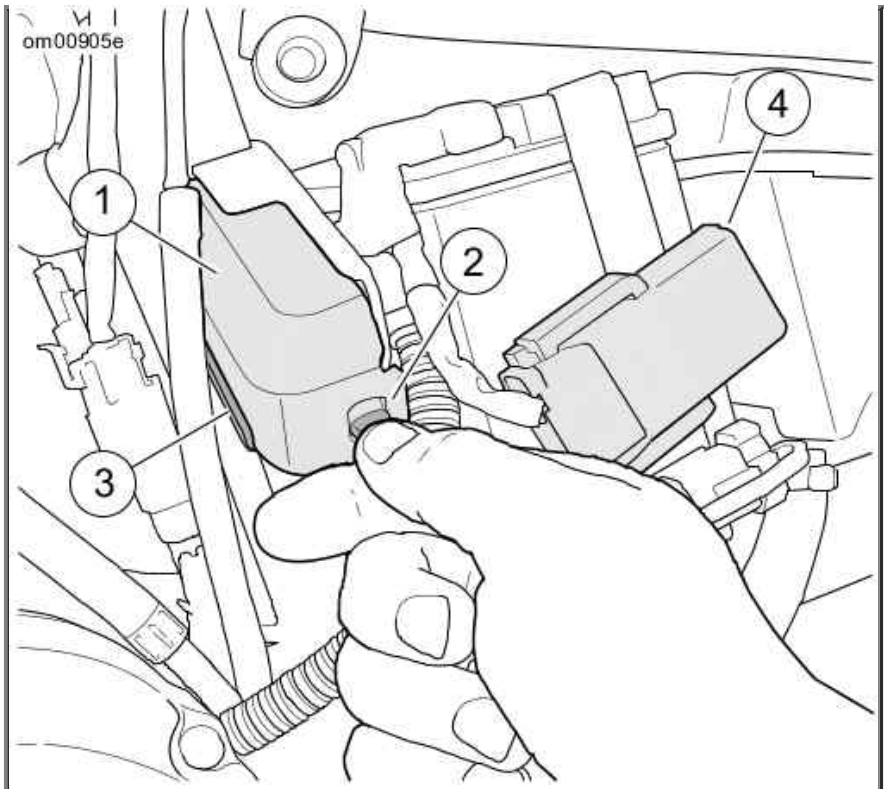

1. Fuse block cover
2. Tab
3. Retaining guide
4. Main fuse

Fuse Block

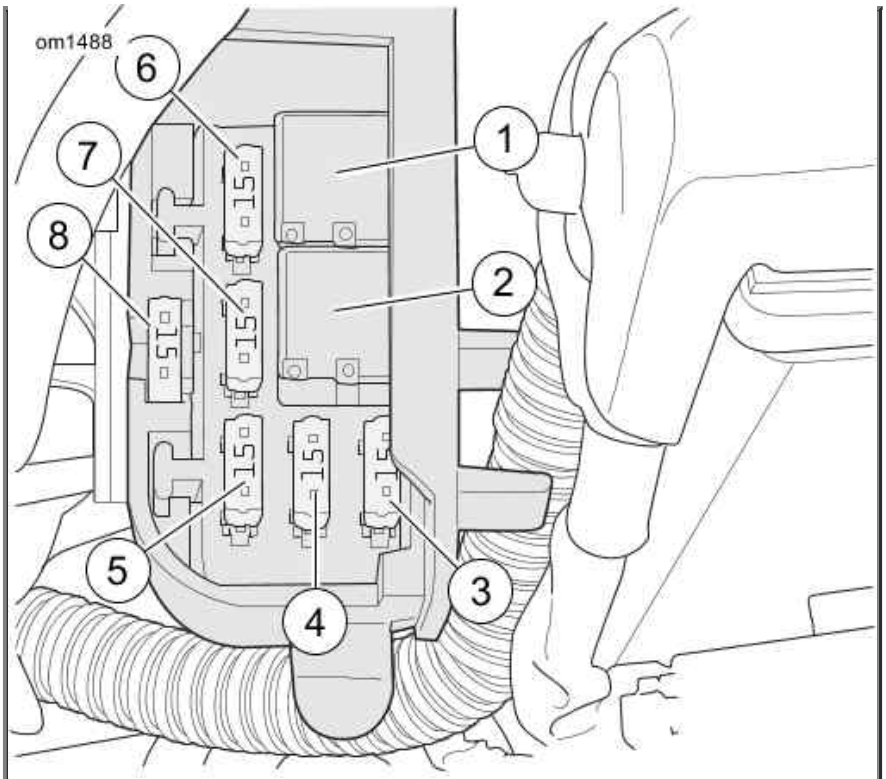

1. System relay
2. Starter relay
3. Ignition
4. Lights
5. Accessory
6. ECM
7. Battery
8. Spare

Relay and Fuse Locations

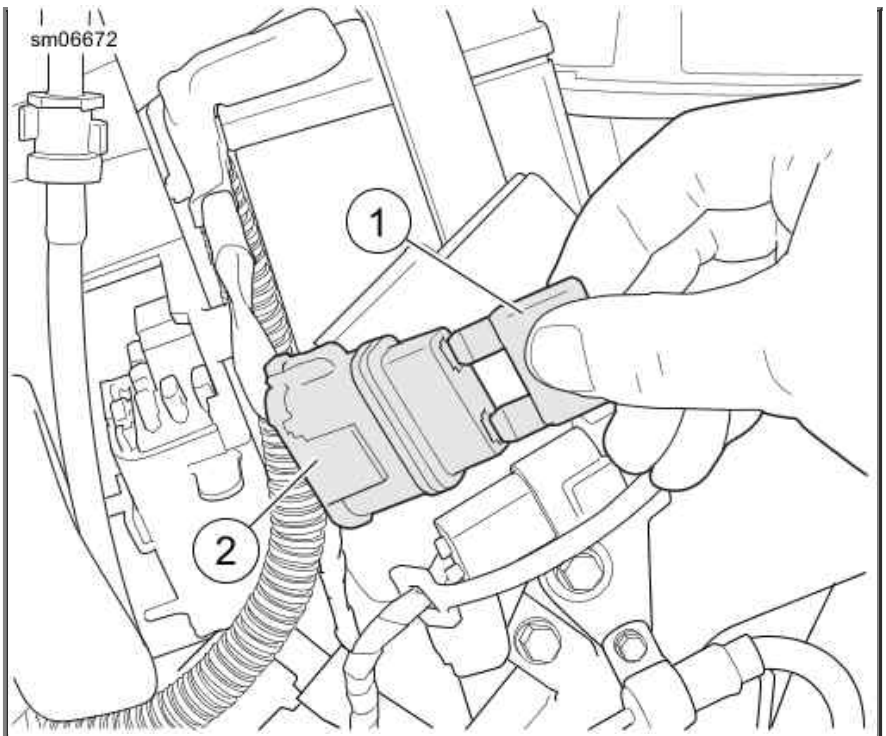

1. Main fuse
2. Fuse holder [5]

Removing/Installing Main Fuse

Seat: XL Models

Removal

1. Remove screw to detach seat from rear fender.
2. Slide seat forward.
3. See Seat Post: XL Models. Lift up slightly to detach keyhole bracket from seat post.

   NOTES:
   - ***Solo Seat:*** *See Seat: XL Solo.*
   - ***Two-Up Seat:*** *See Seat: XL Two-Up.*

4. Slide seat rearward to detach seat tongue (1) from rear fuel tank bracket.
5. Verify that tongue and mounting bracket (3) are tightly secured to the seat bottom.

   NOTE:

   The passenger strap is not sold separately. Replace entire seat if the strap is damaged.

6. If two-up seat, inspect passenger strap (4) for damage or excessive wear.

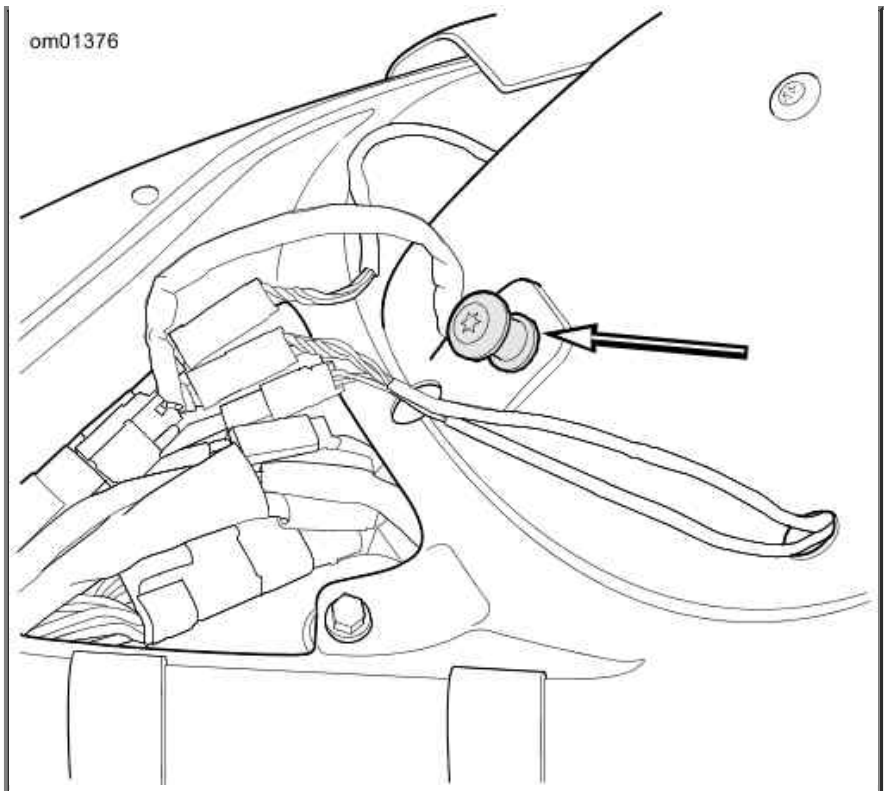

Seat Post: XL Models

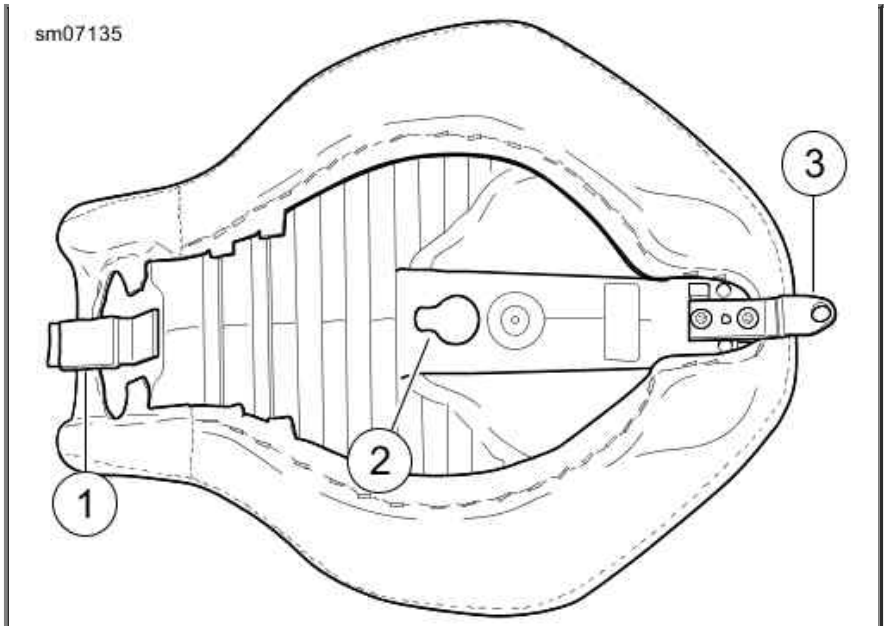

1. Tongue
2. Keyhole
3. Mounting bracket

Seat: XL Solo

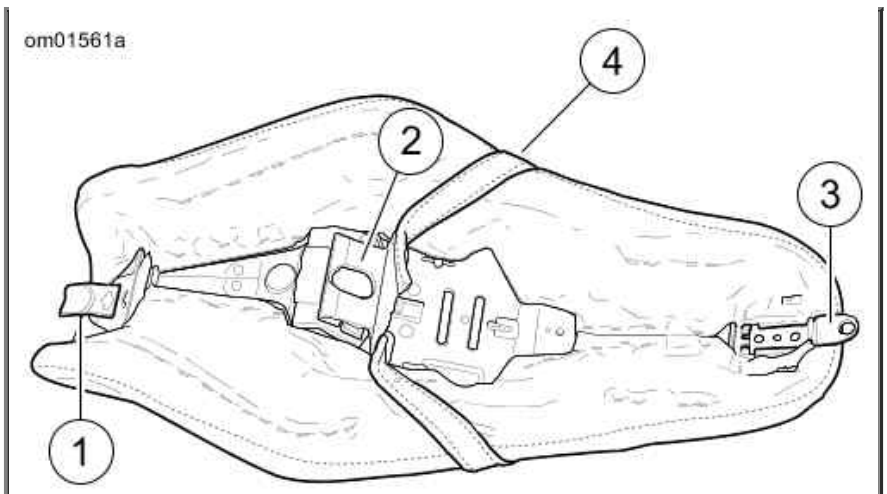

1. Tongue
2. Keyhole
3. Mounting bracket
4. Passenger strap

Seat: XL Two-Up

Installation

1. Position seat on frame with mounting bracket at rear.
2. Slide seat forward until the tongue fits snugly under rear fuel tank bracket.
3. Push seat forward to engage keyhole onto seat post. Pull seat back slightly.

   NOTE:

   Mounting bracket of solo seat uses forward hole in rear fender. Dual seat bracket uses rearward hole.

4. See Seat Assembly: Sportster XL Models. Install seat mounting screw with captive washer to fasten seat mounting bracket to top of rear fender.

5. Pull up on seat to verify that it is locked in place.

6. Tighten seat mounting screw to 20-40 in-lbs (2.3-4.5 Nm).

⚠WARNING

After installing seat, pull upward on seat to be sure it is locked in position. While riding, a loose seat can shift causing loss of control, which could result in death or serious injury. (00070b)

7. Pull up on seat again to verify that it is secured at all three points.

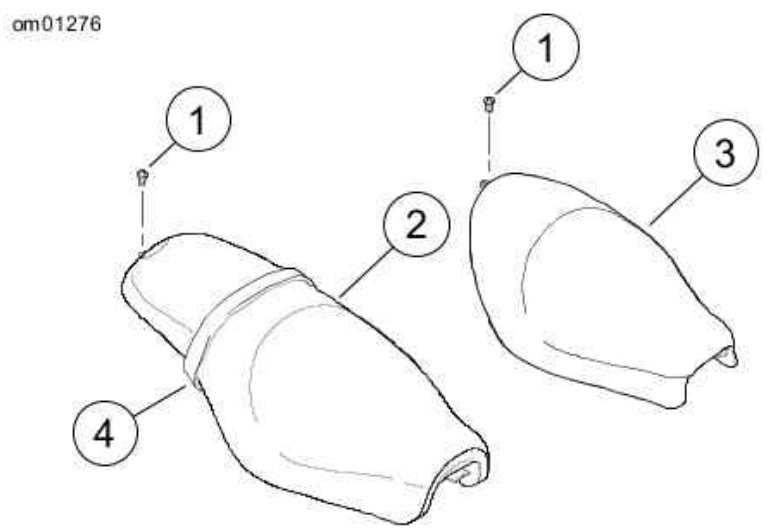

1. Seat mounting screw with captive washer
2. Seat assembly, two-up (typical)
3. Seat assembly, solo (typical)
4. Passenger strap (not sold separately)

Seat Assembly: Sportster XL Models

Seat: XR 1200X

Removal

1. See Front Seat Tabs (under tailsection): XR 1200X. Reach under front end of tailsection. Press the two seat tabs inward.

2. Pull front of seat upward to disengage seat from the front end of the tailsection.

3. Pull seat forward over fuel tank.

NOTES:

- *When removing the seat, verify that the mounting bracket under the seat is tightly secured to the seat bottom.*
- *Check for loose or missing rivets.*
- *Inspect passenger strap for damage or excessive wear. The passenger strap is not sold separately. Replace entire seat if the strap is damaged.*

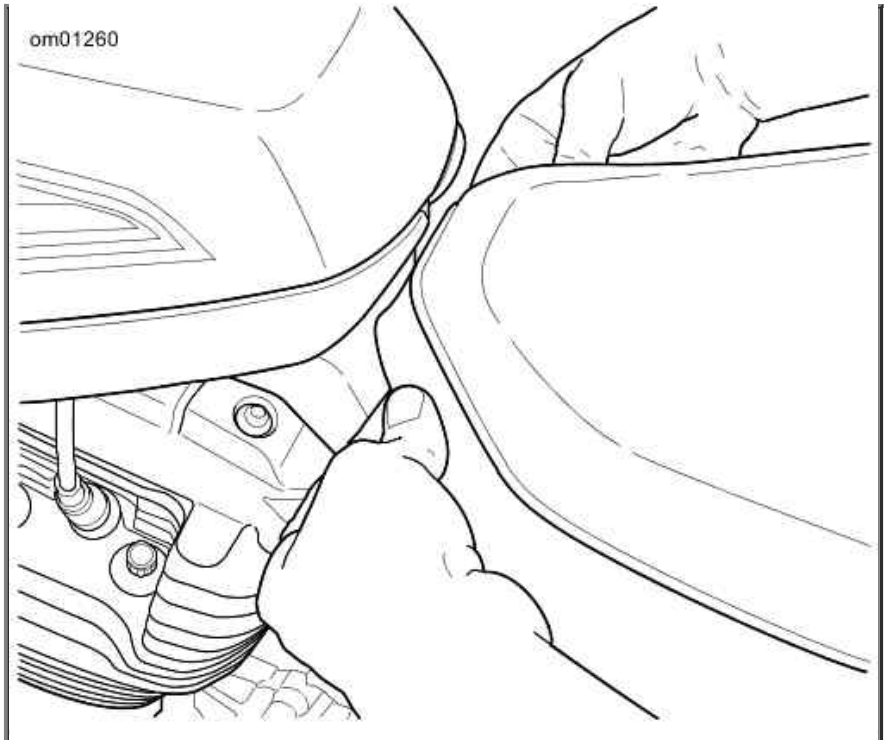

Front Seat Tabs (under tailsection): XR 1200X

Installation

1. See Seat and Pillion: XR 1200X. Align the guides in the seat bracket with the seat posts. Place rear of seat into tailsection.

2. Push down on front of seat until the two tabs engage the front end of tailsection.

⚠WARNING

After installing seat, pull upward on seat to be sure it is locked in position. While riding, a loose seat can shift causing loss of control, which could result in death or serious injury. (00070b)

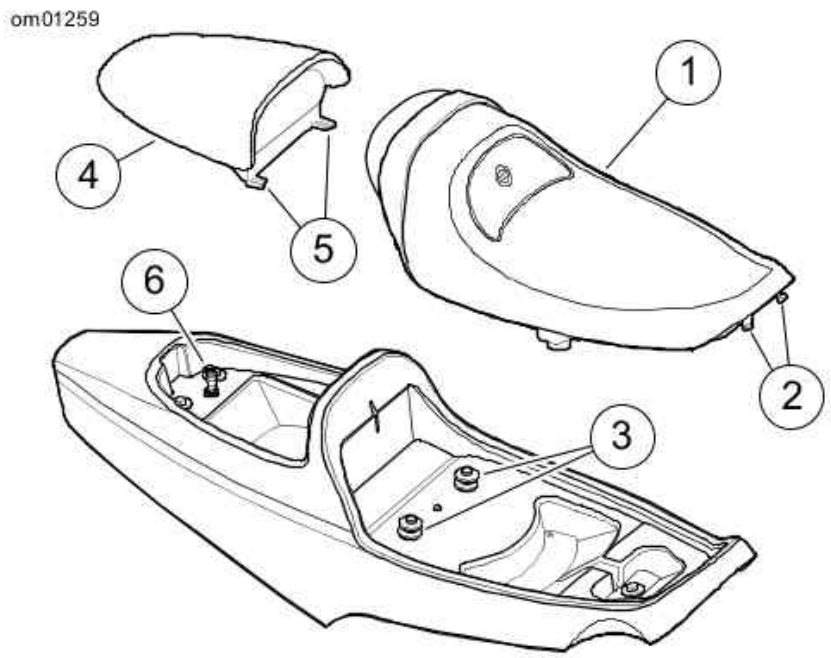

1. Seat
2. Seat tabs
3. Seat posts
4. Passenger pillion
5. Pillion tabs
6. Pillion seat post

Seat and Pillion: XR 1200X

Passenger Pillion: XR 1200X

Removal

1. See Passenger Pillion: XR 1200X. Lift the rear of pillion to disengage grommet from the seat post.
2. Pull pillion out from tailsection.

Installation

1. See Passenger Pillion: XR 1200X. Insert pillion into trunk, aligning tabs on pillion with the slots in the trunk.
2. Push down firmly on rear of pillion until grommet fully engages the seat post.

⚠WARNING

After installing seat, pull upward on seat to be sure it is locked in position. While riding, a loose seat can shift causing loss of control, which could result in death or serious injury. (00070b)

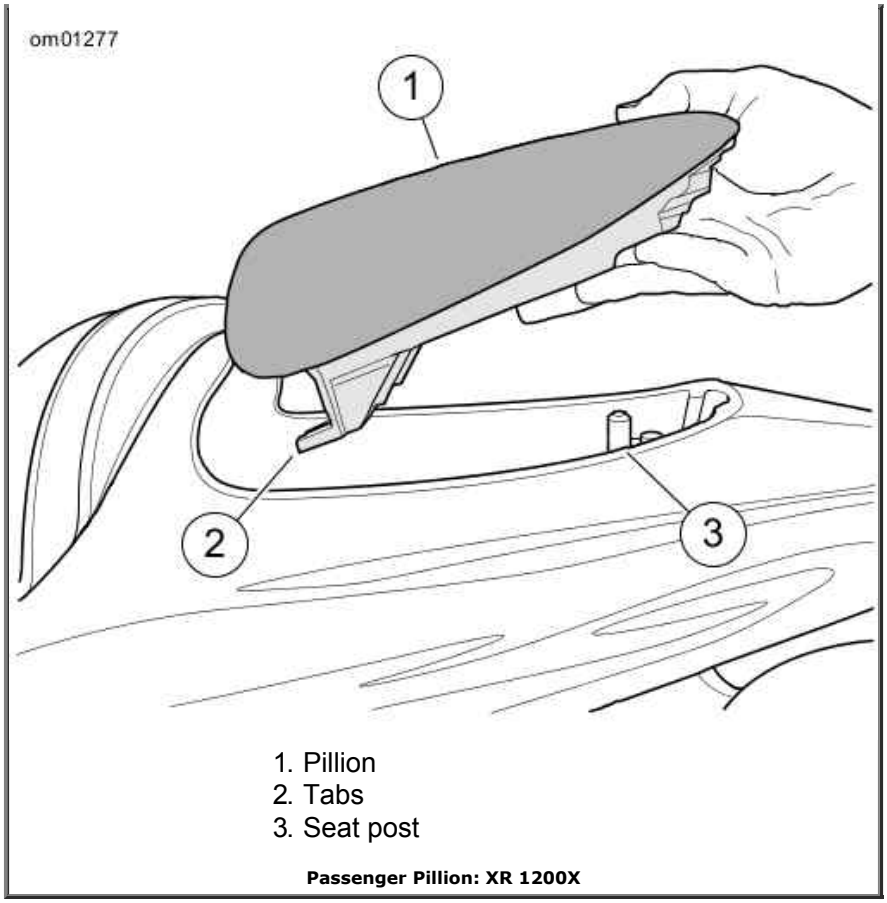

Passenger Pillion: XR 1200X

Motorcycle Storage

Placing Motorcycle in Storage

CAUTION

Proper storage is important for the trouble-free operation of your motorcycle. See your Owner's Manual for storage recommendations or see a Harley-Davidson dealer. Improper storage procedures can lead to equipment damage. (00046a)

If the motorcycle will not be operated for several months, such as during the winter season, there are several tasks which should be performed. These steps will protect parts against corrosion, preserve the battery and prevent the build-up of gum and varnish in the fuel system.

Store the motorcycle in a dry area with a stable temperature (if possible), away from any harsh chemicals or other substances such as fertilizers or salt.

⚠WARNING

Do not store motorcycle with gasoline in tank within the home or garage where open flames, pilot lights, sparks or electric motors are present. Gasoline is extremely flammable and highly explosive, which could result in death or serious injury. (00003a)

NOTE:

Make a list of everything you do and fasten it to a handgrip. When you take the motorcycle out of storage, this list will be your reference/checklist to get your motorcycle in operating condition.

1. Fill fuel tank and add a gasoline stabilizer. Use one of the commercially available gasoline

stabilizers and follow the manufacturer's instructions.

2. Warm motorcycle to operating temperature. Change oil and turn engine over to circulate the new oil.

3. Check and adjust belt if necessary.

4. Check tire pressure. Refer to Specified Tires for specified pressure.

5. To protect the vehicle's body panels, engine, chassis and wheels from corrosion, follow the cosmetic care procedures described in the Care and Cleaning section of this owner's manual prior to storage.

6. Prepare battery for winter storage. See Battery.

⚠WARNING

Explosive hydrogen gas, which escapes during charging, could cause death or serious injury. Charge battery in a well-ventilated area. Keep open flames, electrical sparks and smoking materials away from battery at all times. KEEP BATTERIES AWAY FROM CHILDREN. (00065a)

NOTE:

- *If the motorcycle will be stored with the security system armed, connect a 750Ma SUPERSMART BATTERY TENDER 94654-98B to maintain battery charge.*
- *If the motorcycle will be stored with the security system disarmed, turn the motorcycle on while the hands-free fob is present. This will prevent the optional siren from sounding. Disconnect the negative battery cable and prepare battery for storage. See Battery.*

7. If motorcycle is to be covered, use a material such as light canvas that will breathe. Plastic materials that do not breathe promote the formation of condensation. Do not bend or tuck antennas under the cover. Either remove the antennas (if equipped) or allow them to protrude through the cover.

Removing Motorcycle From Storage

⚠WARNING

The clutch failing to disengage can cause loss of control, which could result in death or serious injury. Prior to starting after extended periods of storage, place transmission in gear and push vehicle back and forth several times to assure proper clutch disengagement. (00075a)

NOTE:

When lubricants have been contaminated by water, they often take on a milky white appearance. Always drain contaminated lubricants and refill with the appropriate Harley-Davidson lubricant prior to motorcycle operation.

1. See Battery for proper battery care. Charge and install the battery.

2. Start the engine and run until it reaches normal operating temperature. Turn off engine.

3. Check engine oil level.

4. Check the transmission lubricant level.

5. Check controls to be sure they are operating properly. Operate the front and rear brakes, throttle, clutch and shifter.

6. Check steering for smoothness by turning the handlebars through the full operating range.

⚠WARNING

Be sure tires are properly inflated, balanced, undamaged, and have adequate tread. Inspect your tires regularly and see a Harley-Davidson dealer for replacements. Riding with excessively worn, unbalanced, improperly inflated, overloaded or damaged tires can lead to tire failure and adversely affect stability and handling, which could result in death or serious injury. (00014b)

7. Check tire pressure. Refer to Specified Tires for specified pressure.
8. Check overall tire condition. See Tire Replacement.
9. Check all electrical equipment and switches including the stop lamp, turn signals and horn for proper operation.
10. Check for any fuel, oil or brake fluid leaks.

CAUTION

Turn engine over a few times to be sure there is no oil in the crankcase and that all oil has been pumped back into the oil tank. Stop engine and re-check oil level. Failure to do so can result in engine damage. (00071a)

Care and Cleaning

Cleaning and General Care

Clean and protect the cosmetic surfaces on your motorcycle as often as possible to inhibit rust and corrosion. After the motorcycle is cleaned, polish and seal the motorcycle to create a sacrificial barrier of protection against the weather and harsh substances.

Refer to Recommended Cleaning and Care Products and Recommended Surface Care Products. Harley-Davidson cleaning products are tested extensively for use on vehicle surfaces and are formulated to be compatible with one another. See a Harley-Davidson dealer to purchase recommended cleaning products.

NOTES:

- *Use recommended surface care products. Do not use paper towels, terry cloths, cloth diapers or other materials with nylon fibers which can create fine scratches to surfaces.*
- *Some painted finishes and other surfaces may be scratched if gravel, dirt or grime are scraped across the surface during washing. Use clean towels and avoid rubbing sediments across gloss finishes.*
- *For repair of scratched surfaces, see a Harley-Davidson dealer.*

⚠WARNING

Observe warnings on labels of cleaning compounds. Failure to follow warnings could result in death or serious injury. (00076a)

⚠WARNING

Do not wash brake discs with cleaners containing chlorine or silicone. Cleaners containing chlorine and silicone can

impair brake function, which could result in death or serious injury. (00077a)

CAUTION

Do not use a pressure washer to clean motorcycle. Using a pressure washer can result in equipment damage. (00489c)

CAUTION

Use of abrasive products or powered buffing equipment will cause permanent cosmetic damage to body panels. Use only recommended products and techniques outlined in this manual to avoid damaging body panels. (00245b)

Recommended Cleaning and Care Products

PRODUCT	PART NUMBER	PURPOSE	FRAME	BODY PANELS	WHEELS	DENIM FINISH	OTHER
Sunwash® Bike Soap	93600023 (U.S. Market) 93600077 (Non-U.S. Market)	Thorough washing of all surfaces with a wash mitt. Reduces hard water spots when washing a motorcycle in the sun.	Yes	Yes	Yes	Yes	
Quick Wash	93600011 (16 oz) 93600012 (32 oz) (U.S. Market) 93600071 (16 oz) (Non-U.S. Market)	A quick wash for a lightly soiled motorcycle. Cleans all surfaces, sheeting action prevents spots.	Yes	Yes	Yes	Yes	
Bug Remover	93600022 (U.S. Market) 93600075 (Non-U.S. Market)	Removes bugs from metal, plastic or painted surfaces. Also available as individual wipes (93600065).	Yes	Yes	Yes	Yes	
Glaze Poly Sealant	93600026 (U.S. Market) 93600079 (Non-U.S.	Polishes windshields, painted surfaces and chrome.	Yes	Yes	As applicable	No	

	Market)						
Gloss Detailer	93600062 (U.S. Market) 93600073 (Non-U.S. Market)	Produces high gloss with UV protection. Allows chrome to breathe, unlike wax. Good for windshields. Also available as individual wipes (93600066).	Yes	Yes	Yes	No	
Spray Cleaner & Polish	93600029 (U.S. Market) 93600084 (Non-U.S. Market)	Aerosol quick cleaner and detailer. Reduces static attraction to dust. Works great for removing bugs.	Yes	Yes	Yes	No	
Wheel & Tire Cleaner	93600024 (U.S. Market) 93600076 (Non-U.S. Market)	Cleans wheels, tires, whitewalls and black-coated exhaust pipes and mufflers. Do not use on frames or anodized parts.	No	No	Yes	No	
Chrome Clean & Shine	93600031 (U.S. Market) 93600082 (Non-U.S. Market)	Shines chrome-plated surfaces and cleans brushed aluminum or stainless steel surfaces.	As applicable				
Bare Metal Polish	93600028 (U.S. Market) 93600083 (Non-U.S. Market)	Polishes non-clear coated polished aluminum or polished stainless steel surfaces.	As applicable				
Scratch & Swirl Repair	93600025 (U.S. Market) 93600074 (Non-U.S. Market)	Removes fine scratches and swirls.	Yes	Yes	No	No	
Denim Paint Cleaner	93600064 (U.S. Market)	Waterless quick cleaner and detailer.	Yes	Yes	Yes	Yes	

	93600078 (Non-U.S. Market)						
Windshield Cleaner Individual Wipes	97406-10	Quick windshield cleaner in convenient single use wipe.	Yes	Yes	No	No	Windshield
H-D Black Tire Sidewall Protectant	94628-05	Restores luster to black tire sidewalls.	No	No	No	No	Tires
Harley Preserve Bare Aluminum Corrosion Protectant	99845-07	Corrosion control for bare aluminum surfaces. Also available as individual wipes (93600063).	As applicable				
Windshield Water Repellent	93600032 (Global)	Allows water to bead and dissipate from the windshield.	No	No	No	No	Windshield
Leather Protectant	93600034 (U.S. Market) 93600080 (Non-U.S. Market)	Weatherproofs and preserves leather products.	No	No	No	No	Leather goods
Black Leather Rejuvenator	93600033 (U.S. Market) 93600081 (Non-U.S. Market)	Rejuvenates black leather products so they look brand new.	No	No	No	No	Black leather goods
Engine Brightener	93600002 (U.S. Market) 93600068 (Non-U.S. Market)	Rejuvenates wrinkle black engine finish.	No	No	No	No	Wrinkle black engines
Boot Mark Remover	93600001 (U.S. Market) 93600069 (Non-U.S. Market)	Removes boot marks from chrome exhaust components.	No	No	No	No	Exhaust system
Travel Care Kit	93600007	Travel size cleaning and	Yes	Yes	Yes	Yes	

		care products.					
Seat, Saddlebag & Trim Cleaner	93600010 (U.S. Market) 93600070 (Non-U.S. Market)	Cleans and conditions vinyl, leather and plastic. Use on seats, saddlebags, inner fairings, and any other trim.	No	No	No	No	Seats, saddlebags and trim
NOVUS 1 Cleaner/Protectant	99837-94T	Cleans windshields, tail lamps and all plastics. Resists fingerprints, fogging, smears and repels dust.	No	No	No	No	Windshield
NOVUS 2 Scratch Remover	99836-94T	Minor scratch remover for windshields and plastics. Apply after NOVUS 1.	No	No	No	No	Windshield

Recommended Surface Care Products

PRODUCT	PART NO.	DESCRIPTION
Wash Mitt	94760-99	Absorbent wool-blended washing mitten.
Soft Detailing Pad	94790-01	Soft pad for removing bugs and debris without scratching the surface finish.
Softstrips	94680-99	For cylindrical surfaces such as handlebars, forks, pushrod covers and spokes.
Softcloth	94656-98	Non-absorbent cloth for applying and buffing Swirl & Scratch treatment and Harley Glaze to painted surfaces or chrome.
Soft Drying Towel	94791-01	Extra-absorbent, non-streaking synthetic towel for drying. Dampen towel and wring out before using for greatest absorbency.
Harley-Davidson Hog Blaster Motorcycle Dryer	94651-09	Blows a stream of warm dry filtered air. Reduces streaks and water spots.
Wheel & Spoke Brush	43078-99	Cone-shaped scrub brush for wheels.
Microfiber Detailing Cloth	94663-02	Highly absorbent detailing cloth for polishing and sealing. Contains no nylon fibers.
Detailing Swabs	93600107	Large cotton swabs for cleaning crevices and detailed surfaces.
Cleaning Brush Kit	94844-10	Brush kit for detailing your motorcycle.
H-D Bike Wash Bucket and Apron	94811-10	Wash bucket with apron to hold your supplies. Includes grit guard.

Washing the Motorcycle

Use only recommended cleaning and care products. Refer to Recommended Cleaning and

Care Products and Recommended Surface Care Products.

NOTE:

During rinsing and washing, avoid direct spray on radio, speakers, saddlebags, trunk or Tour-Pak sealing areas (if equipped). Avoid spraying water under leather saddlebag covers (if equipped).

Preparation

1. Allow motorcycle to cool before rinsing or washing. Spraying water on hot surfaces can leave water spots and mineral deposits.
2. Rinse the motorcycle from the bottom up.
3. To loosen dried bugs or hardened dirt, allow surfaces to soak under a damp towel.

Cleaning the Wheels and Tires

1. Rinse wheel and tire surfaces. Avoid splashing brake dust on chrome or painted parts.
2. Apply WHEEL & TIRE CLEANER. Allow cleaner to set for one minute.
3. Clean the wheel with a SOFT DETAILING PAD or WHEEL & SPOKE BRUSH. Use SOFTSTRIPS to clean wheel spokes. Thoroughly scrub all brake dust and other sediments off the wheel. Accumulated brake dust can trap moisture and dirt, which leads to wheel corrosion.
4. Rinse well.

Washing the Motorcycle

NOTE:

Refer to the appropriate instructions in this section for cleaning leather, Denim (flat) finishes, windshields or other special surfaces.

1. Fill a bucket with clean water.
2. Fill an H-D WASH BUCKET with water and add SUNWASH BIKE SOAP, following the directions on the package.
3. Soak the H-D WASH MITT in the SUNWASH solution. Wash all surfaces from the top working down.
4. Spray BUG REMOVER to remove any bugs.
5. Rinse the motorcycle:
    a. Rinse from the bottom up.
    b. Rinse from the top down.

Drying the Motorcycle

1. Dry the surfaces from the top down using a SOFT DRYING TOWEL or a HARLEY-DAVIDSON HOG BLASTER MOTORCYCLE DRYER. Avoid using any type of forced air on speakers or other sensitive components.
2. Dampen towel in clean water and wring out the excess. The towel is more absorbent when wet.
3. Wipe across the vehicle surface.

4. Repeat as necessary until surface is completely dry.

Polishing and Sealing

NOTE:

If motorcycle has Denim finish, skip the Polishing and Sealing procedure.

1. Apply GLAZE POLY SEALANT with a SOFTCLOTH or MICROFIBER DETAILING CLOTH, following the instructions on the package.
2. Buff with a SOFTCLOTH.
3. Polish and seal the wheels as described in Wheel Care to prevent corrosion.

NOTE:

Bare aluminum wheels do not have a protective coating. The wheels corrode if not properly treated. Apply HARLEY PRESERVE BARE ALUMINUM CORROSION PROTECTANT when purchasing the motorcycle and at least twice per year to prevent cosmetic damage to bare aluminum wheels.

Finishing Tires

Apply H-D BLACK TIRE SIDEWALL PROTECTANT to tires, following the instructions on the package.

Denim Finish Care

Some motorcycles have a Denim (flat or matte) finish. The Denim finish has qualities which differ from high gloss finishes on all other Harley-Davidson motorcycles. Like denim fabric, Denim paint will burnish or mar with age and use, thus adding character and personality to the finish of the motorcycle. Refer to Recommended Cleaning and Care Products for recommended products.

- If scratched, the color coat of paint does nick/scuff and these marks cannot be rubbed out.
- If polished, the finish will become less matte and more glossy over time.

How to Clean

For light deposits: Use DENIM PAINT CLEANER and a SOFTCLOTH. This helps remove finger prints and light soil.

For heavier deposits: Use either SUNWASH BIKE SOAP and a clean H-D WASH MITT or QUICK WASH. Rinse thoroughly with clean water.

Leather and Vinyl Care

CAUTION

Do not use bleach or detergents containing bleach on saddlebags, seats, tank panels or painted surfaces. Doing so can result in equipment damage. (00229a)

- Do not use ordinary soap to clean leather or fur. It could dry or remove the oils from the leather.

Leather, vinyl and other synthetic surfaces must be periodically cleaned and treated to maintain its appearance and extend its life. Clean and treat these surfaces once a season or more frequently under adverse conditions.

These surfaces are not designed for long-term exposure to inclement weather and should be protected with a Harley-Davidson Seat Rain Cover or Motorcycle Storage Cover (sold separately).

1. Vacuum or blow dust off surface.
2. Thoroughly clean surfaces with SEAT, SADDLEBAG & TRIM CLEANER, following directions on the bottle.
3. Allow the material to dry naturally and completely at room temperature before applying other products to the material. Do not use artificial means to dry the material quickly.
4. For leather only, rejuvenate faded black surfaces with BLACK LEATHER REJUVENATOR, and apply LEATHER PROTECTANT to weatherproof and preserve the leather.

NOTE:

Many Harley-Davidson accessories and seats are made of either treated or untreated leather or have leather inserts. Natural materials age differently and require different care than man-made materials. Seat covers and panels made of leather will gain "character", such as wrinkles, with age. Leather is porous and organic and each leather product will settle into its own distinct form with use. Your leather product will mature into its own custom shape and style from the sun, rain and time. This maturing is natural and will enhance the custom quality of your Harley-Davidson motorcycle.

Wheel Care

Wheels can corrode or be cosmetically damaged if they are not properly cleaned, polished and preserved. Cleaning and sealing wheels with the proper treatment will guard against pitting, corrosion, spots and stains. Harley-Davidson recommends that wheels be cared for weekly. Corrosion to wheels is not considered to be a defect in materials or workmanship.

NOTE:

Bare aluminum wheels do not have a protective coating and will corrode if not properly treated. Apply HARLEY PRESERVE BARE ALUMINUM CORROSION PROTECTANT when purchasing the motorcycle and at least twice per year to prevent cosmetic damage to bare aluminum wheels.

Keep wheels clean from harsh chemicals, acid based wheel cleaners, salt, and accumulated brake dust. After washing wheels with WHEEL & TIRE CLEANER, use the polish and sealing products in Wheel Polish and Sealing Products according to the type of wheels on your motorcycle.

Wheel Polish and Sealing Products

WHEELS	PRODUCT	DESCRIPTION
Bare aluminum	HARLEY PRESERVE™ BARE ALUMINUM CORROSION PROTECTANT	Creates a protective coating for bare aluminum wheels to prevent oxidation.
Polished aluminum or stainless steel	BARE METAL POLISH	Microabrasive polish to refurbish polished wheels. Do not use on chrome.
	GLOSS DETAILER	Seals and protects against harsh chemicals, salt, and other sediments to prevent oxidation.
Anodized (thick painted surfaces)	GLAZE POLY SEALANT	Cleans surface, removes fine scratches, and provides a breathable sealant against acid, chemicals, salt, and brake dust.
Chrome	CHROME CLEAN & SHINE	Non-abrasive cleaner to brighten chrome wheels.
	GLOSS DETAILER	Seals and protects against harsh chemicals, salt, and other sediments to prevent oxidation.

Windshield Care

CAUTION

Polycarbonate windscreens/windshields require proper attention and care to maintain. Failure to maintain polycarbonate properly can result in damage to the windscreen/windshield. (00483d)

CAUTION

Use only Harley-Davidson recommended products on Harley-Davidson windshields. Do not use harsh chemicals or rain sheeting products, which can cause windshield surface damage, such as dulling or hazing. (00231c)

- Powdered, abrasive or alkaline cleanser will damage the windscreen/windshield. Ammonia-based window cleaners cause permanent yellow effects to windshields.
- Do not use gas station windshield cleaner as it may damage the finish.
- Do not clean in hot sun or high temperature.

Windshields require special care. Harley-Davidson recommends using WINDSHIELD CLEANER to clean your windshield. Refer to Recommended Cleaning and Care Products for recommended cleaning products.

NOTES:

- *Use NOVUS 2 SCRATCH REMOVER to remove minor scratches.*
- *To treat the windshield with water repellent use WINDSHIELD WATER REPELLENT.*
- *Covering the windshield with a clean, wet cloth for approximately 15-20 minutes before washing will make dried bug removal easier.*

1. Use mild soap and warm water to wash the windshield.
2. Wipe dry with a clean SOFT DRYING TOWEL.

NOTE:

To minimize swirl marks, cleaning should be done when motorcycle is cool and parked in the shade. Faint swirl marks are normal and may be more visible on tinted windshields.

Big Flake Custom Paint

Big flake custom paint features a unique coating which may include flakes of varied color and size. The surface may also have an uneven texture, as a result of multiple layers of clear coat being applied over heavy concentrations of metallic flake. Each part will have its own distinct and custom appearance. These are normal characteristics of the custom paint process, and do not reflect warrantable conditions.

Troubleshooting

Troubleshooting: General

⚠WARNING

The troubleshooting section of the Owner's Manual is a guide to diagnose problems. Read the service manual before performing any work. Improper repair and/or maintenance could result in death or serious injury. (00080a)

The following checklist of possible operating troubles and their probable causes will be helpful in keeping your motorcycle in good operating condition. More than one of these conditions may be causing trouble and should be carefully checked.

Starter Does Not Operate or Does Not Turn Engine Over

1. Engine OFF/RUN switch in OFF position.
2. Ignition switch not ON.
3. Discharged battery or loose or corroded connections (solenoid chatters).
4. Clutch lever not squeezed against handlebar or transmission not in neutral.
5. Jiffy stand not in retracted position (for models equipped with jiffy stand interlock).
6. Blown fuse.

Engine Turns Over But Does Not Start

1. Fuel tank empty.
2. Fuel filter clogged.
3. Discharged battery or loose or damaged battery terminal connections.
4. Fouled spark plugs.
5. Spark plug cable connections loose or in bad condition and shorting.
6. Loose or corroded wire or cable connection(s) at coil or battery.
7. Fuel pump inoperative.
8. Blown fuse.

Starts Hard

1. Spark plugs in bad condition, have improper gap, or are partially fouled.
2. Spark plug cables in bad condition and leaking.
3. Battery nearly discharged.
4. Loose wire or cable connection(s) at one of the battery terminals or at coil.
5. Engine oil too heavy (winter operation).
6. Fuel tank vent plugged or fuel line closed off, restricting fuel flow.
7. Water or dirt in fuel system or filter.
8. Fuel pump inoperative.

Starts But Runs Irregularly or Misses

1. Spark plugs in bad condition or partially fouled.
2. Spark plug cables in bad condition and leaking.
3. Spark plug gap too close or too wide.
4. Battery nearly discharged.

5. Damaged wire or loose connection at battery terminals or coils.
6. Intermittent short circuit due to damaged wire insulation.
7. Water or dirt in fuel system or filter.
8. Fuel vent system plugged. See dealer.
9. One or more injectors fouled.

A Spark Plug Fouls Repeatedly

1. Fuel mixture too rich.
2. Incorrect spark plug.

Pre-ignition or Detonation (Knocks or Pings)

1. Incorrect fuel.
2. Incorrect spark plug for kind of service.

Overheats

1. Insufficient oil supply or oil not circulating.
2. Heavy carbon deposit from lugging engine. See dealer.
3. Insufficient air flow over cylinder heads during extended periods of idling or parade duty.

Excessive Vibration

1. Rear fork pivot shaft nuts loose. See dealer.
2. Front engine mounting bolts loose. See dealer.
3. Front chain or links tight as a result of insufficient lubrication or belt badly worn.
4. Engine to transmission mounting bolts loose (applicable models). See dealer.
5. Damaged frame. See dealer.
6. Wheels and/or tires damaged. See dealer.
7. Vehicle not properly aligned. See dealer.

Engine Oil Not Circulating (Oil Pressure Lamp Lit)

1. Insufficient or diluted oil supply.
2. Oil feed clogged with ice and sludge in freezing weather.
3. Grounded oil signal switch wire or faulty signal switch. See dealer.
4. Damaged or improperly installed check valve. See dealer.
5. Oil pump problem. See dealer.

Electrical System

Alternator Does Not Charge

1. Regulator not grounded. See dealer.
2. Engine ground wire loose or damaged. See dealer.
3. Loose or damaged wires in charging circuit. See dealer.

Alternator Charge Rate is Below Normal

1. Weak battery.
2. Excessive use of add-on accessories.
3. Loose or corroded connections.
4. Extensive periods of idling or low speed riding.

Transmission

Transmission Shifts Hard

1. Bent shifter rod. See dealer.

Transmission Jumps Out of Gear

1. Worn shifter dogs in transmission. See dealer.

Clutch Slips

1. Clutch controls improperly adjusted. See dealer.
2. Worn friction discs. See dealer.
3. Insufficient clutch spring tension. See dealer.

Clutch Drags or Does Not Release

1. Clutch controls improperly adjusted. See dealer.
2. Primary chaincase overfilled.
3. Clutch discs warped. See dealer.

Clutch Chatters

1. Friction discs or steel discs worn or warped. See dealer.

Brakes

Brakes Do Not Hold Normally

1. Master cylinder low on fluid. See dealer.
2. Brake line contains air bubbles. See dealer.

3. Master cylinder piston worn. See dealer.
4. Brake pads contaminated with grease or oil. See dealer.
5. Brake pads badly worn. See dealer.
6. Brake disc badly worn or warped. See dealer.
7. Brake fades because of heat build up. Excessive braking or brake pads dragging. See dealer.
8. Brake drags. Insufficient hand lever free play. See dealer.

Accessories

Genuine Motor Parts and Accessories

Stop at your Harley-Davidson dealer to pick up a copy of the Genuine Motor Parts and Accessories catalog or go to www.harley-davidson.com to view thousands of Genuine Motor Accessories that are available for Harley-Davidson motorcycles.

The website includes the following tools and resources for accessorizing and personalizing your motorcycle.

Online Catalog

The full Genuine Motor Parts and Accessories catalog is available online in PDF format. The catalog includes hundreds of pages of Harley-Davidson accessories and maintenance products. For performance parts, check out the Screamin' Eagle Pro Racing Parts catalog.

Shop For Your Bike

Browse through categories of accessories and options available specifically for your motorcycle. View product descriptions, pricing, fitment and online instruction sheets for many of the available products.

Customizer

Virtually redesign your motorcycle with parts and accessories using the Customizer. This tool allows you to experiment with different accessory and color combinations and shows how your motorcycle would look with the accessories installed. You can easily create a custom list of accessories to print out for your dealer.

Fit Shop

Learn how to customize your motorcycle to fit you personally. See how making changes to the suspension, seat, handlebars or foot controls can enhance the ergonomics and comfort of your motorcycle.

Custom Seats

Create a custom seat using selected designs, colors and textured materials. Custom seat specifications can be easily printed out for your dealer.

Custom Coverage

Add Accessories To Your New Ride

Harley-Davidson is offering a limited opportunity to purchase new accessories and have them installed at an authorized Harley-Davidson dealership **and** receive the Custom Coverage extended Limited Warranty rather than the standard one year Parts and Accessories post purchase over-the-counter warranty.

- Limited warranty for eligible *street legal* Genuine Harley-Davidson Motor Parts and Genuine Harley-Davidson Motor Accessories to run concurrent with the remainder of the motorcycle's 24-month manufacturer's warranty.
- Visit an authorized Harley-Davidson dealership within 60 days to qualify for Custom Coverage.
- Parts and accessories must be purchased and installed at an authorized Harley-Davidson dealership to qualify for Custom Coverage.
- Visit any authorized Harley-Davidson dealership as often as you like during the 60 days after purchase to select, purchase and install accessories.

Ride, personalize, customize. Take advantage of this Custom Coverage extended Limited Warranty offer today to make your bike your Custom ride.

NOTE:

Customers have 60 days after the motorcycle purchase date to participate in Custom Coverage extended Limited Warranty offer. Parts and Accessories must be purchased and installed at an authorized Harley-Davidson dealership. Parts and Accessories purchased via the internet are not eligible. To locate the authorized Harley-Davidson dealership nearest you, visit the Dealer Locator on www.harley-davidson.com.

Warranties and Responsibilities

Warranty and Maintenance

This Owner's Manual contains your new motorcycle limited warranty and your owner's maintenance record.

It is your responsibility as the owner to follow the maintenance schedule at the mileage intervals as specified in the Owner's Manual. All of the specified maintenance services must be performed to keep your limited warranty valid.

Some countries, states or other locations may require all regular maintenance and service work to be done by an authorized Harley-Davidson dealer for your limited warranty to remain in effect. Check with your authorized Harley-Davidson dealer for local requirements.

1. Make an appointment with a Harley-Davidson dealer for inspection and service prior to the first 1000 mi 1600 km , and as soon as possible after any problem arises.

2. Bring this Owner's Manual with you when you visit your authorized Harley-Davidson dealer to have your motorcycle inspected and serviced.

3. Have the dealer technician sign the maintenance record in the Owner's Manual at the proper mileage interval. These records should be retained by the owner as proof of proper maintenance.

4. Keep receipts covering any parts, service or maintenance performed.

These records should be transferred to each subsequent owner.

Use only Harley-Davidson approved parts and accessories that have been designed, tested and approved for your model and model year motorcycle.

Use of certain manufacturers' aftermarket performance parts may void all or parts of your limited warranty. See an authorized Harley-Davidson dealer for details.

Harley-Davidson authorized dealerships are independently owned and operated and may sell

parts and accessories that are not manufactured or approved by Harley-Davidson for use on your motorcycle. Therefore, you should understand that Harley-Davidson is not and cannot be responsible for the quality, suitability, or safety of any non-Harley-Davidson part, accessory or design modification, including labor, which may be sold and/or installed by authorized Harley-Davidson dealerships.

Keeping It All Harley-Davidson

Genuine Harley-Davidson parts are engineered and tested specifically for use on your motorcycle. Insist that your authorized Harley-Davidson dealer uses only genuine Harley-Davidson replacement parts and accessories to keep your Harley-Davidson motorcycle and its limited warranty intact.

NOTE:

Installing off-road or competition parts to enhance performance may void all or part of your new motorcycle limited warranty. See the Harley-Davidson Motorcycle Limited Warranty in this manual or an authorized Harley-Davidson dealer for details.

CAUTION

It is possible to overload your vehicle's charging system by adding too many electrical accessories. If the combined electrical accessories operating at any one time consume more electrical current than the vehicle's charging system can produce, the electrical consumption can discharge the battery and cause damage to the vehicle's electrical system. See an authorized Harley-Davidson dealer for advice about the amount of current consumed by additional electrical accessories or for necessary wiring changes. (00211c)

California and Select International Markets Evaporative Emission Controls: 2013 Models

All new 2013 Harley-Davidson motorcycles sold in the State of California and select international markets are equipped with an evaporative emission control system. This system is designed to meet CARB and local regulations in effect at the time of manufacture.

The system requires a small amount of maintenance. Periodic inspection is required to make sure hoses are properly routed, not kinked or blocked and that all fittings are secure. Mounting hardware should also be checked periodically for tightness.

EPA Noise Regulations in the United States

EPA noise regulations require that the following statements be included in the Owner's Manual.

EPA Regulations

TAMPERING WITH NOISE CONTROL SYSTEM PROHIBITED: Federal law prohibits the following acts or the causing thereof: (1) The removal or rendering inoperative by any person other than for purposes of maintenance, repair, or replacement of any device or element of design incorporated into any new vehicle for the purpose of noise control prior to its sale or delivery to the ultimate purchaser or while it is in use, or (2) the use of the vehicle after such device or element of design has been removed or rendered inoperative by any person.

AMONG THOSE ACTS PRESUMED TO CONSTITUTE TAMPERING ARE THE FOLLOWING:

1. Replacing the muffler(s) and/or the entire exhaust system with parts not certified to be noise legal for street use.

2. Removing or modifying the muffler internal baffles in any way.
3. Replacing the air intake/cleaner assembly with one not certified to be noise legal for street use.
4. Modifying the air intake/cleaner assembly in such a way as to make the vehicle no longer noise legal for street use.

Harley-Davidson recommends that any and all noise related maintenance be done by an authorized Harley-Davidson dealer using genuine Harley-Davidson parts.

Warranty/Service Information

Any authorized Harley-Davidson dealer is responsible for providing the warranty repair work on your motorcycle. The fact that a dealership performs warranty repairs does not create an agency relationship between Harley-Davidson Motor Company and the authorized dealership. If you have any questions regarding warranty obligations contact your authorized Harley-Davidson dealer.

For normal service work or warranty work under the above conditions, you may obtain the name and location of your nearest U.S. authorized Harley-Davidson dealer by calling 800-258-2464 (U.S. only). To find dealers worldwide, see www.harley-davidson.com.

Reporting Safety Defects in United States

Safety defects must be reported to the National Highway Traffic Safety Administration (NHTSA) and Harley-Davidson.

NHTSA Statement

If you believe that your motorcycle has a defect which could cause a crash or could cause injury or death, you should immediately inform the National Highway Traffic Safety Administration (NHTSA) in addition to notifying Harley-Davidson.

If NHTSA receives similar complaints, it may open an investigation, and if it finds that a safety defect exists in a group of motorcycles, it may order a recall and remedy campaign. However, NHTSA cannot become involved in individual problems between you, your authorized Harley-Davidson dealer, or Harley-Davidson.

Refer to NHTSA Contacts to contact NHTSA.

NHTSA Contacts

ITEM	DATA
Phone	Call the Auto Safety Hot Line toll-free at 888-DASH-2DOT
Mail	U.S. Department of Transportation, National Highway Traffic Safety Administration, Office of Defects Investigation, NVS-210, 400 7th Street S.W., Washington, D.C. 20590
Web site	www.nhtsa.dot.gov

You can also obtain other information about motor vehicle safety from the hot line.

Required Documentation for Imported Motorcycles

If a Harley-Davidson motorcycle is imported into the United States, additional documentation is required to be eligible for the United States Harley-Davidson's Limited Warranty. A Harley-Davidson dealer can provide a form explaining the requirements.

Owner Contact Information

If you move from your present address, sell your motorcycle, or purchase a pre-owned Harley-Davidson motorcycle, see an authorized Harley-Davidson dealer to update your owner contact information.

This will provide Harley-Davidson with an accurate registration (as required by law in some countries), and will allow Harley-Davidson to notify you in the event of a recall or product program.

The rights and benefits conferred upon you and the obligations of Harley-Davidson as set forth herein are separate and distinct from any rights and duties set forth in a service contract you may have purchased from a dealership and/or third-party insurance company. Harley-Davidson does not authorize any entity to expand the warranty obligations in connection with your motorcycle or this limited warranty.

When updating your contact information, your authorized Harley-Davidson dealer will need your vehicle identification number (VIN), odometer mileage, and date of vehicle transfer (if applicable).

Questions and Concerns

If you have questions or concerns regarding the performance of your motorcycle or the application of the limited warranty described here, or are not satisfied with the service you are receiving from an authorized Harley-Davidson dealership, do the following:

1. Contact the selling and/or servicing dealership and speak to the sales and/or service manager.

2. If your concern cannot be addressed to your satisfaction by the dealership, contact the Harley-Davidson Enterprise Contact Center by mailing your concern to the following address or calling the phone number below.

In the U.S., state warranty laws, often referred to as lemon laws, may provide you with certain rights not specifically mentioned here. To the extent allowed by your state, Harley-Davidson requires that you first send written notification of any defect or warranty non-conformity that you have experienced with your motorcycle to Harley-Davidson. Harley-Davidson appreciates the opportunity to investigate your concerns and restore your satisfaction in your motorcycle by making the necessary repairs consistent with the terms of the limited warranty. Harley-Davidson requests that you send your complaint to the Harley-Davidson Enterprise Contact Center.

- Harley-Davidson Motor Company
- Attention: Harley-Davidson Enterprise Contact Center
- P.O. Box 653
- Milwaukee, Wisconsin 53201
- (800) 258-2464 (U.S. only)
- (414) 343-4056

Limited Motorcycle Warranty

2013 HARLEY-DAVIDSON MOTORCYCLE LIMITED WARRANTY

24 Months/Unlimited Miles

Harley-Davidson warrants for any new 2013 Harley-Davidson motorcycle/sidecar that an authorized Harley-Davidson dealer will repair or replace without charge any parts found under normal use to be defective in factory materials or workmanship. Such repair or replacement of parts will be Harley-Davidson's sole obligation and your sole remedy under this limited warranty.

THERE IS NO OTHER EXPRESS WARRANTY (OTHER THAN THE SEPARATE EMISSIONS AND NOISE LIMITED WARRANTIES) ON THE MOTORCYCLE/SIDECAR. Any implied warranty of merchantability or fitness for particular purpose is limited to the duration of the express

warranty, or to the duration set forth in your state's warranty statutes, whichever is shorter. The implied warranty is not transferred to subsequent purchasers/buyers.

Some states do not allow limitations on how long an implied warranty lasts, so the above limitation may not apply to you.

TO THE FULLEST EXTENT ALLOWED BY LAW, NEITHER HARLEY-DAVIDSON NOR ITS AUTHORIZED DEALERS SHALL BE LIABLE FOR LOSS OF TIME, INCONVENIENCE, LOSS OF MOTORCYCLE/SIDECAR USE, COMMERCIAL LOSS OR OTHER INCIDENTAL OR CONSEQUENTIAL DAMAGES.

Some states do not allow the exclusion or limitation of incidental or consequential damages, so the above limitation or exclusion may not apply to you.

This limited warranty gives you specific legal rights, and you may have other rights which vary from state to state.

The following terms and conditions apply to this limited warranty:

Duration

1. The duration of this limited warranty is twenty-four months, starting from the earlier of (a) the date of initial retail purchase and delivery from an authorized Harley-Davidson dealer, or (b) the third anniversary of the last day of the model year of the motorcycle/sidecar. Your authorized Harley-Davidson dealer will submit an electronic Sales and Warranty Registration form to initiate your limited warranty.

2. Any unexpired portion of this limited express warranty will be transferred to subsequent owners, upon the resale of the motorcycle/sidecar during the limited warranty period.

Owner's Obligations

To obtain warranty service, return your motorcycle/sidecar at your expense within the limited warranty period to an authorized dealer. The authorized Harley-Davidson dealer should be able to provide warranty service during normal business hours and as soon as possible, depending upon the workload of the authorized dealer's service department and the availability of necessary parts.

Exclusions

This limited warranty will not apply to any motorcycle/sidecar as follows:

1. Which has not been operated or maintained as specified in the Owner's Manual.

2. Which has been abused, neglected, misused, improperly stored, used "off the highway," or used for racing or competition of any kind.

3. Which is not manufactured to comply with the laws of the market in which it is registered.

4. Which has off-road or competition parts installed to enhance performance, or has other unapproved modifications (even if these modifications include genuine Harley-Davidson parts and accessories that are not approved for use on your motorcycle). These modifications may void all or part of your new motorcycle/sidecar limited warranty. See an authorized Harley-Davidson dealer for details.

5. Acts of God, war, riot, insurrection, natural disasters, including, but not limited to, nuclear contamination, lightning, forest fires, dust storms, hail storms, ice storms, earthquakes, floods, or for other circumstances out of Harley-Davidson's control.

6. Which has been in an accident, collision, dropped or struck.

Other Limitations

This warranty does not cover:

1. Parts and labor for normal maintenance as recommended in the Owner's Manual, or the replacement of parts due to normal wear and tear including, but not limited to, the following: tires, lubrication, oil and filter change, fuel system cleaning, battery maintenance, engine tune-up, spark plugs, brake, clutch, chain/belt adjustment and chain replacement.

2. Cosmetic concerns that arise as a result of owner abuse, lack of proper maintenance or environmental conditions (except concerns that result from defects in factory materials or workmanship, which are covered by this limited warranty for the duration of the limited warranty period).

3. Any cosmetic condition existing at the time of retail delivery that has not been documented by the authorized Harley-Davidson selling dealer prior to retail delivery.

4. Defects or damage to the motorcycle/sidecar caused by alterations outside of Harley-Davidson's factory specifications or caused by alterations or use of non-Harley-Davidson approved parts or accessories.

5. Damage caused by installation or use of non-Harley-Davidson components, even those installed by an authorized dealership, that cause a Harley-Davidson part to fail. Examples include, but are not limited to performance-enhancing powertrain components or software, exhaust systems, non-approved tires, lowering kits, handlebars, add-ons connected to the factory electrical system, etc.

Important: Read Carefully

---

1. Authorized Harley-Davidson dealers are independently owned and operated and may sell non-Harley-Davidson products. Because of this, HARLEY-DAVIDSON IS NOT RESPONSIBLE FOR THE SAFETY, QUALITY, OR SUITABILITY OF ANY NON-HARLEY-DAVIDSON PART, ACCESSORY OR DESIGN MODIFICATION INCLUDING, BUT NOT LIMITED TO, LABOR WHICH MAY BE SOLD AND/OR INSTALLED BY AUTHORIZED HARLEY-DAVIDSON DEALERS.

2. This limited warranty is a contract between you and Harley-Davidson. It is separate and apart from any warranty you may receive or purchase from an authorized Harley-Davidson dealer. An authorized Harley-Davidson dealer is not authorized to alter, modify, or in any way change the terms and conditions of this limited warranty.

3. Any warranty work or parts replacement authorized by Harley-Davidson will not preclude Harley-Davidson from later relying on any exclusion where applicable.

4. Harley-Davidson and its dealers reserve the right to modify or service motorcycles designed and manufactured by Harley-Davidson at any time without incurring any additional obligation to make the same alteration or change to a motorcycle previously built and sold. Harley-Davidson reserves the right to provide post-warranty repairs, conduct repair campaigns, offer good-will or customer satisfaction repairs or extend the warranty coverage for certain motorcycles at its sole discretion. Said repairs or extensions of warranty coverage in no way obligates Harley-Davidson to provide similar accommodations to other owners of similar motorcycles. Sometimes Harley-Davidson may offer a special adjustment program to pay all or part of the cost of certain repairs beyond the terms of your limited warranty. Check with your dealer to learn whether such programs are available to you. Your state may prohibit these types of offers, in which case, they may not be available to you.

5. The fact that a part is labeled or branded Harley-Davidson does not necessarily make it appropriate or warranted for the make and model of your motorcycle. The use of parts not designed and tested for your motorcycle may have negative consequences on the performance of your motorcycle and may create conditions not covered by the limited factory warranty.

Limited Noise Warranty

2013 HARLEY-DAVIDSON MOTORCYCLE NOISE CONTROL SYSTEM LIMITED WARRANTY

The following limited warranty applies to the noise control system, is in addition to the MOTORCYCLE LIMITED WARRANTY and EMISSION CONTROL SYSTEM LIMITED WARRANTY, and applies only to Harley-Davidson motorcycles sold in the U.S.

Harley-Davidson warrants to the first owner and each subsequent owner that this motorcycle is designed and built so as to conform at the time of sale with applicable regulations of the U.S. Environmental Protection Agency (as tested following F-76 Drive-By test procedure) and that it is free from defects in factory materials and workmanship which can cause this motorcycle not to meet U.S. Environmental Protection Agency Standards within one (1) year from initial retail purchase and delivery from an authorized Harley-Davidson dealer or one (1) year from the [second] anniversary of the last day of the model year of the motorcycle, or 3,730 miles 6,000 kilometers whichever occurs first. Any unexpired portion of this limited warranty will be transferred to subsequent owners, upon the resale of the motorcycle during the limited warranty period. If the motorcycle was used as a demonstrator or company motorcycle, then the limited warranty period may have started and/or expired prior to the initial retail sale. See an authorized Harley-Davidson dealer for details.

THERE IS NO OTHER EXPRESS WARRANTY (OTHER THAN THE SEPARATE MOTORCYCLE AND EMISSIONS LIMITED WARRANTIES) ON THE MOTORCYCLE. ANY IMPLIED WARRANTY OF MERCHANTABILITY OR FITNESS FOR PARTICULAR PURPOSE IS LIMITED TO THE DURATION OF THIS LIMITED WARRANTY.

Some states do not allow limitations on how long an implied warranty lasts, so the above limitation may not apply to you.

The limited one year warranty period shall begin on the date the motorcycle is delivered to the first retail purchaser or, if the motorcycle is placed in service as a demonstrator or company motorcycle prior to sale at retail, on the date it is first placed in service.

THE FOLLOWING ITEMS ARE NOT COVERED BY THE NOISE CONTROL SYSTEM LIMITED WARRANTY

1. Failures which arise as a result of misuse, alteration, or non-performance of maintenance as specified in the Owner's Manual.
2. Replacing, removing, or modifying any portion of the NOISE CONTROL SYSTEM (consisting of the exhaust system and air intake/cleaner assembly) with parts not certified to be noise legal for street use.
3. Any motorcycle on which the odometer mileage has been changed so that the mileage cannot be determined.
4. TO THE FULLEST EXTENT ALLOWED BY LAW, NEITHER HARLEY-DAVIDSON NOR ITS AUTHORIZED DEALERS SHALL BE LIABLE FOR LOSS OF TIME, INCONVENIENCE, LOSS OF MOTORCYCLE USE, COMMERCIAL LOSS OR OTHER INCIDENTAL OR CONSEQUENTIAL DAMAGES.

Some states do not allow the exclusion or limitation of incidental or consequential damages, so the above limitation or exclusion may not apply to you.

Other Rights

This limited warranty gives you specific legal rights, and you may have other rights which vary from state to state.

Recommendations for Required Maintenance

It is recommended that any noise system maintenance be performed by an authorized Harley-Davidson dealer using genuine Harley-Davidson replacement parts. The maintenance,

replacement or repair of the noise control system may be performed by any other qualified service outlet or individual. Non-genuine Harley-Davidson parts may be used only if such parts are certified to comply with U.S. Environmental Protection Agency Standards.

Limited Emission Warranty

2013 HARLEY-DAVIDSON EMISSION CONTROL SYSTEM LIMITED WARRANTY

The following limited warranty applies to the emission control system, is in addition to the MOTORCYCLE LIMITED WARRANTY and NOISE CONTROL SYSTEM LIMITED WARRANTY, and applies only to Harley-Davidson motorcycles certified for sale, registered, and normally operated in the U.S. Refer to the "CALIFORNIA EMISSIONS CONTROL WARRANTY STATEMENT" for additional warranty provisions applicable to California motorcycles.

Harley-Davidson Motor Company warrants to the first owner and each subsequent owner that this vehicle is designed, built, and equipped so as to conform at the time of sale with applicable regulations under section 7521 of Title 42 of the United States Code, and that it is free from defects in materials and workmanship which would cause this motorcycle to fail to conform with applicable regulations for five (5) years from the initial retail purchase and delivery from an authorized Harley-Davidson dealer (or five (5) years from the date the motorcycle is first placed in service, if it is first placed in service as a "demonstrator" or "company" motorcycle prior to delivery), or 18,641 miles 30,000 kilometers , whichever occurs first. Any unexpired portion of this limited warranty will be transferred to subsequent owners, upon the resale of the motorcycle during the warranty period.

THERE IS NO OTHER EXPRESS WARRANTY (OTHER THAN THE SEPARATE MOTORCYCLE AND NOISE LIMITED WARRANTIES) ON THE MOTORCYCLE. ANY IMPLIED WARRANTY OF MERCHANTABILITY OR FITNESS FOR PARTICULAR PURPOSE IS LIMITED TO THE DURATION OF THIS WARRANTY.

Some states do not allow limitations on how long an implied warranty lasts, so the above limitation may not apply to you.

The limited warranty period shall begin on the date the motorcycle is delivered to the first retail purchaser or, if the motorcycle is placed in service as a demonstrator or company motorcycle prior to sale at retail, on the date it is first placed in service.

THE FOLLOWING ITEMS ARE NOT COVERED BY THE EMISSION CONTROL SYSTEM LIMITED WARRANTY

1. Failures which arise as a result of misuse, tampering, alterations, accident, acts of nature, or improper or inadequate maintenance as specified in the Owner's Manual.

2. Required maintenance services (as specified in the Owner's Manual) and the replacement of parts (such as spark plugs, fuel and oil filters, etc.) used in required maintenance.

3. Any motorcycle on which the odometer mileage has been changed so that the mileage cannot be determined.

4. TO THE FULLEST EXTENT ALLOWED BY LAW, NEITHER HARLEY-DAVIDSON NOR ITS AUTHORIZED DEALERS SHALL BE LIABLE FOR LOSS OF TIME, INCONVENIENCE, TOWING OF THE VEHICLE, LOSS OF MOTORCYCLE USE, COMMERCIAL LOSS OR OTHER INCIDENTAL OR CONSEQUENTIAL DAMAGES.

Some states do not allow the exclusion or limitation of incidental or consequential damages, so the above limitation or exclusion may not apply to you.

Items Covered by this Emission Warranty

The emission control system warranty may cover the following parts if the defect is deemed to be emissions related:

- Intake manifold

- Air cleaner backplate with solenoid operated door, as applicable
- Air cleaner filter
- Cam shaft
- Spark plug
- Ignition coil
- Ignition wires
- Vapor valve
- Catalytic converter mufflers, as applicable
- Crankcase breather
- MAP sensor

Fuel Injection:

- Induction module (including all sensors, injectors and all their associated connectors)
- Engine temperature sensor
- Electronic control unit
- Regulator/fuel pump (for leaks and/or high and low pressure failures)
- Fuel filter
- Oxygen sensors

Fuel Tank: (non-cosmetic failures only)

- Leaks
- Fuel vapor separator
- Fuel cap

If used on the above: hoses, clamps, fittings, tubing, sealing gaskets and mounting hardware.

Detailed instructions for proper maintenance and use of this motorcycle, including the time and/or mileage intervals at which such maintenance is to be performed, may be found in this Owner's Manual under Regular Service Intervals.

Other Rights

This limited warranty gives you specific legal rights, and you may have other rights which vary from state to state.

Recommendations for Required Maintenance

It is recommended that any emission system maintenance be performed by an authorized Harley-Davidson dealer using genuine Harley-Davidson replacement parts. However the maintenance, replacement or repair of the emissions control system may be performed by any other qualified service outlet or individual. Non-genuine Harley-Davidson parts may be used only if such parts are certified to comply with U.S. Environmental Protection Agency Standards.

California Emissions Control Warranty

CALIFORNIA EMISSIONS CONTROL WARRANTY STATEMENT

Your Warranty Rights and Obligations

The California Air Resources Board and Harley-Davidson Motor Company are pleased to explain the emission control system warranty on your 2013 model year motorcycle. In California, new motor vehicles must be designed, built and equipped to meet the State's stringent anti-smog standards. Harley-Davidson Motor Company must warrant the emission control system on your motorcycle for the periods of time listed below provided there has been no abuse, unapproved modification, neglect or improper maintenance of your motorcycle.

Your emission control system may include parts such as the carburetor or fuel-injection system, the ignition system, catalytic converter, and engine computer. Also included may be hoses,

connectors and other emission-related assemblies.

Where a warrantable condition exists, within the warranty period noted below, your authorized Harley-Davidson dealer will repair your motorcycle at no cost to you including diagnosis, parts and labor.

Manufacturer's Warranty Coverage

For a period of use of five years or 18,641 miles 30,000 kilometers , whichever first occurs, beginning on the date the motorcycle is delivered to the ultimate purchaser:

If any emission related part on your motorcycle is defective, the part will be repaired or replaced by Harley-Davidson Motor Company. This is your emission control system DEFECTS WARRANTY.

Owner's Warranty Responsibilities

As the motorcycle owner, you are responsible for the performance of the required maintenance listed in your Owner's Manual. Harley-Davidson recommends that you retain all receipts covering maintenance on your motorcycle, but Harley-Davidson cannot deny emissions warranty coverage solely for the lack of receipts or for your failure to ensure the performance of all scheduled maintenance.

You are responsible for presenting your motorcycle to an authorized Harley-Davidson dealer as soon as a problem exists. The warranty repairs should be completed in a reasonable amount of time, not to exceed 30 days.

As the motorcycle owner, you should also be aware that Harley-Davidson may deny you warranty coverage if your motorcycle or a part has failed due to abuse, neglect, improper maintenance or unapproved modifications.

If you have any questions regarding your warranty rights and responsibilities, you should contact Harley-Davidson Customer Service Department at (800) 258-2464 (U.S. only) or (414) 343-4056, or the California Air Resources Board at 9528 Telstar Ave., El Monte, California 91731.

Additional Warranty Terms

The warranty period starts the date the motorcycle is delivered to the ultimate purchaser or, if the motorcycle is placed in service as a demonstrator or company motorcycle prior to sale at retail, the date it is first placed in service.

The emission control system of each new Harley-Davidson® motorcycle was designed, built and tested using only Genuine Harley-Davidson parts and with these parts the motorcycle is certified as being in conformity with California emission control regulations.

We recommend that you take your motorcycle to an authorized Harley-Davidson dealer for repairs under this warranty. The dealer has factory-trained mechanics and genuine Harley-Davidson parts. However, in the case of an "emergency" (as defined below), you could have repairs performed at any available service establishment or by the owner, using any replacement part. An authorized Harley-Davidson dealer not being reasonably available, or a part not being available within a reasonable time period (not to exceed 30 days from the time the motorcycle is initially presented to a Harley-Davidson dealer for repair) constitutes an emergency. Harley-Davidson will reimburse the owner for such repairs, including diagnosis, only if it is established that the repairs are covered under this emission warranty. Harley-Davidson's parts reimbursement, however, will not exceed our suggested retail price for all warranted parts replaced and our labor reimbursement will be limited to our recommended time allowances for emission system repairs at the geographically appropriate hourly labor rate.

To obtain reimbursement from Harley-Davidson for such emergency repairs, you must keep all failed parts and original receipts, so you can present them to an authorized Harley-Davidson dealer for inspection. Harley-Davidson recommends that you bring your motorcycle to an

authorized dealer for inspection to ensure that the emergency repairs were done properly.

Remember: Use of non-Harley-Davidson replacement parts may impair the effectiveness of the emission control system or otherwise damage your motorcycle. If other than genuine Harley-Davidson parts are used for maintenance, replacement or repair of components affecting emission control, you should obtain written assurances that such non-Harley-Davidson parts are warranted by their manufacturer to be equal in quality to Genuine Harley-Davidson parts in both performance and durability. The use of non-Harley-Davidson replacement parts does not invalidate the existing warranty, if any, on other Harley-Davidson components unless the non-Harley-Davidson parts cause damage to warranted parts or result in the creation of an emissions non-compliant motorcycle. However, HARLEY-DAVIDSON ASSUMES NO LIABILITY UNDER THIS WARRANTY WITH RESPECT TO ANY PARTS WHICH ARE NOT GENUINE HARLEY-DAVIDSON PARTS, unless Harley-Davidson parts cause damage to non-genuine Harley-Davidson parts.

What Is Covered By This Emission Warranty

The emission control system warranty covers the following "warranted parts" only:

- Intake manifold
- Air cleaner backplate with solenoid operated door, as applicable
- Air cleaner filter
- Cam shaft
- Spark plug
- Ignition coil
- Ignition wires
- Charcoal canister
- Vapor valve
- Catalytic converter mufflers, as applicable
- Crankcase breather
- Purge control valves
- MAP sensor

Fuel Injection:

- Induction module (including all sensors, injectors and all their associated connectors)
- Engine temperature sensor
- Electronic control unit
- Regulator/fuel pump (for leaks and/or high and low pressure failures)
- Fuel filter
- Oxygen sensors

Fuel Tank: (non-cosmetic failures only)

- Leaks
- Fuel vapor separator
- Fuel cap

If used on the above: hoses, clamps, fittings, tubing, sealing gaskets and mounting hardware

What Is Not Covered By This Emission Warranty

The emission control system warranty does not cover:

Malfunctions in any "warranted parts" caused by any of the following: abuse, misuse, unapproved modification or alteration, tampering, disconnection, or improper or inadequate maintenance. The warranty also does not cover replacement of listed parts in the event that the vehicle has been rendered emissions non-compliant in the state of California through actions noted above.

Damage resulting from accident, acts of nature or other events beyond the control of Harley-Davidson.

The repair or replacement of "warranted parts" which are scheduled for replacement prior to

18,641 mi 30,000 km , once these parts have been replaced at the first replacement interval as part of required maintenance services.

Repairs and services performed by anyone other than an authorized Harley-Davidson Dealer (except in case of emergency as defined above).

Loss of time, inconvenience, loss of use of the motorcycle, towing of the vehicle, or commercial loss and/or consequential damages.

Repairs on any motorcycle of which odometer mileage has been changed so that mileage cannot be readily determined.

Maintenance Scheduling

Regular Service Intervals

Refer to Regular Service Intervals: 2013 Sportster Models. Regular maintenance must be performed specified intervals to help keep your new Harley-Davidson motorcycle operating at peak performance and ke your new motorcycle limited warranty in force. Your authorized Harley-Davidson dealer knows best how to s your motorcycle with factory approved methods and equipment assuring you of thorough and competent workmanship.

Some maintenance items should be done at least once per year as specified, even if the next mileage interv not been reached. In severe riding conditions, some maintenance items may need to be performed more fre Refer to the notes in Regular Service Intervals: 2013 Sportster Models.

NOTES:

- *The use of parts and service procedures other than Harley-Davidson approved parts and service proce may void the limited warranty. Any alterations to the emission system components, such as the intake exhaust system, may be in violation of motor vehicle laws.*
- *Some countries, such as Brazil, may require all regular maintenance to be performed by an authorized Davidson dealer for your limited warranty to remain in effect. Check with your authorized Harley-David dealer.*
- *Some countries, such as Brazil, may require additional annual (or semi-annual) regular maintenance s be performed to keep your limited warranty in effect and/or comply with vehicle regulations. Check with authorized Harley-Davidson dealer and check the motorcycle regulations in your country for local requirements.*
- *After completing the final service interval in Regular Service Intervals: 2013 Sportster Models, r the service schedule starting at the 5000 mi 8000 km interval.*

⚠WARNING

Perform the service and maintenance operations as indicated in the regular service interval table. Lack of regular maintenance at the recommended intervals can affect the safe operation of your motorcycle, which could result in death or serious injury. (00010a)

⚠WARNING

If you operate your motorcycle under adverse conditions (severe cold, extreme heat, very dusty environment, very bad roads, through standing water, etc.), you should perform the regular maintenance intervals more frequently to ensure the safe operation of your motorcycle. Failure to maintain your motorcycle could result in death or serious injury. (00094a)

Regular Service Intervals: 2013 Sportster Models

ITEM SERVICED	PROCEDURE	1000 MI	5000 MI	10000 MI	15000 MI	20000 MI	25000 MI	30000 MI	35000 MI	40000 MI	45000 MI	50000 MI	M

		1600 KM	8000 KM	16000 KM	24000 KM	32000 KM	40000 KM	48000 KM	56000 KM	64000 KM	72000 KM	80000 KM	
Engine oil and filter	Replace	X	X	X	X	X	X	X	X	X	X	X	3
Oil lines and brake system	Inspect for leaks, contact or abrasion	X	X	X	X	X	X	X	X	X	X	X	1
Air cleaner	Inspect, service as required		X	X	X	X	X	X	X	X	X	X	7
Tires	Check pressure, inspect tread	X	X	X	X	X	X	X	X	X	X	X	3
Wheel spokes (if equipped)	Check tightness	X	X			X			X			X	1
Primary chain	Check adjustment	X	X	X	X	X	X	X	X	X	X	X	
Transmission lubricant	Replace	X		X		X		X		X		X	7
Clutch	Check adjustment	X	X	X	X	X	X	X	X	X	X	X	1
Drive belt and sprockets	Inspect, adjust belt	X	X	X	X	X	X	X	X	X	X	X	1
Throttle, brake and clutch controls	Check, adjust and lubricate	X	X	X	X	X	X	X	X	X	X	X	1
Jiffy stand	Inspect and lubricate	X	X	X	X	X	X	X	X	X	X	X	1
Fuel lines and fittings	Inspect for leaks, contact or abrasion	X	X	X	X	X	X	X	X	X	X	X	1
Fuel filter element	Replace	Replace every 100,000 mi 160,000 km .											1
Brake fluid	Inspect sight glass	X	X	X	X	X	X	X	X	X	X	X	4
Brake pads and discs	Inspect for wear	X	X	X	X	X	X	X	X	X	X	X	
Front brake lever pin	Inspect		X	X	X	X		X	X	X	X		1
Front brake lever pin	Lubricate						X					X	1
Brake caliper pins	Inspect		X	X	X	X		X	X	X	X		1
Brake caliper pins	Lubricate						X					X	1
Brake caliper boots and bushings	Inspect		X	X	X	X		X	X	X	X		1
Brake caliper boots and bushings	Replace						X					X	1
Rear master cylinder	Inspect		X	X	X	X	X	X	X	X	X	X	1

outer boot													
Brake components	Replace brake rubber components in master cylinders and calipers						X					X	1
Brake components	Lubricate master cylinder pistons						X					X	1
Spark plugs	Replace							X					8
Electrical equipment and switches	Check operation	X	X	X	X	X	X	X	X	X	X	X	
Front forks	Rebuild											X	1
Steering head bearings	Adjust	X				X				X			1
Rear fork bearings		Inspect every 30,000 mi 48,000 km											1
Critical fasteners	Check tightness	X		X		X		X		X		X	1
Engine mounts and stabilizer links	Inspect			X		X		X		X		X	1
Battery		Check battery and clean connections annually.											
Exhaust system	Inspect for leaks, cracks, and loose or missing fasteners or heat shields	X	X	X	X	X	X	X	X	X	X	X	3
Road test	Verify component and system functions	X	X	X	X	X	X	X	X	X	X	X	

NOTES:

1. Should be performed by an authorized Harley-Davidson dealer, unless you have the prope service data and are mechanically qualified.

2. Disassemble, lubricate and inspect every 30,000 mi 48,000 km .

3. Perform annually or at specified intervals, whichever comes first.

4. Replace DOT 4 hydraulic brake fluid and flush system every two (2) years.

5. Perform spoke tension check at 1000 mi 1600 km , 5000 mi 8000 km , 20,000 mi 32,000 k services and every 15,000 mi 24,000 km interval thereafter. Not all vehicles are equipped wit spoke wheels. Consult appropriate topic in service manual.

6. Replace every four (4) years or at specified intervals, whichever comes first.

7. Perform maintenance more frequently in severe riding conditions (such as extreme temper dusty environments, mountainous or rough roads, long storage conditions, short runs, heavy stop/go traffic or poor fuel quality).

8. Replace every two (2) years or at specified intervals, whichever comes first.

9. Disassemble, inspect, rebuild forks and replace fork oil every 50,000 mi 80,000 km .

Owner's Maintenance Records

SERVICE MILE INTERVAL	DATE	DEALER NUMBER	TECHNICIAN NAME	TECHNICI SIGNATU
1000 mi 1600 km				
5000 mi 8000 km				
10,000 mi 16,000 km				
15,000 mi 24,000 km				
20,000 mi 32,000 km				
25,000 mi 40,000 km				
30,000 mi 48,000 km				
35,000 mi 56,000 km				
40,000 mi 64,000 km				
45,000 mi 72,000 km				
50,000 mi 80,000 km				

Service Literature

Refer to Service Literature: 2013 Sportster Models. Visit any Harley-Davidson dealer or go to www.har davidson.com to purchase a service or parts manual for your motorcycle. Factory authorized manuals are th complete and detailed source of information outside of your Harley-Davidson dealer.

Service Literature: 2013 Sportster Models

DOCUMENT	LANGUAGE	PART NUMBER
Service Manual	English	99484-13
	French	99484-13FR
	German	99484-13DE
	Spanish	99484-13ES
	Italian	99484-13IT
	Simplified Chinese	99484-13ZH
	Japanese	99484-13JA
Electrical Diagnostic Manual	English	99495-13
	French	99495-13FR
	German	99495-13DE
	Spanish	99495-13ES
	Italian	99495-13IT
	Simplified Chinese	99495-13ZH
	Japanese	99495-13JA
Parts Catalog	English	99451-13

H-D Michigan, Inc. Trademark Information

Bar & Shield, Cross Bones, Digital Tech, Digital Technician, Digital Technician II, Dyna, Electra Glide, Evolut Bob, Fat Boy, Forty-Eight, Glaze, Gloss, H-D, H-Dnet.com, Harley, Harley-Davidson, HD, Heritage Softail, Ir Low Rider, Night Rod, Nightster, Night Train, Profile, Revolution, Road Glide, Road King, Road Tech, Rocke Screamin' Eagle, Seventy-Two, Softail, Sportster, Street Glide, Street Rod, Sun Ray, Sunwash, Super Glide,

SuperLow, Switchback, SYN3, TechLink, TechLink II, Tour-Pak, Twin Cam 88, Twin Cam 88B, Twin Cam 96
Cam 96B, Twin Cam 103, Twin Cam 103B, Twin Cam 110, Twin Cam 110B, Ultra Classic, V-Rod, VRSC, XI
and Harley-Davidson Genuine Motor Parts and Genuine Motor Accessories are among the trademarks of H-
Michigan, Inc.

Product Registered Marks

Apple, Alcantara S.p.A., Allen, Amp Multilock, Bluetooth, Brembo, Delphi, Deutsch, Dunlop, Dynojet, Fluke, (
Versilube, Garmin, Gunk, Hydroseal, Hylomar, iPhone, iPod, Kevlar, Lexan, Loctite, Lubriplate, Keps, K&N,
Magnaflux, Marson Thread-Setter Tool Kit, MAXI fuse, Molex, Michelin, MPZ, Mulitilock, nano, NGK, Novus,
Packard, Pirelli, Permatex, Philips, PJ1, Pozidriv, Robinair, S100, Sems, Snap-on, Teflon, Threadlocker, Tor
Torco, TORX, Tufoil, Tyco, Ultratorch, Velcro, X-Acto, XM Satellite Radio, and zumo are among the tradema
their respective owners.