Safety First

Safe Operating Rules: VRSC Models

⚠WARNING

Motorcycles are different from other vehicles. They operate, steer, handle and brake differently. Unskilled or improper use could result in loss of control, death or serious injury. (00556c)

- Take a rider training course.
- Read Owner's Manual before riding, adding accessories or servicing.
- Wear a helmet, eye protection and protective clothing.
- Never tow a trailer.

Before operating your new motorcycle it is your responsibility to read and follow the operating and maintenance instructions in this manual, and follow these basic rules for your personal safety.

- Know and respect the rules of the road (see RULES OF THE ROAD section). Carefully read and observe the rules contained in the RIDING TIPS booklet accompanying this Owner's Manual. Read and familiarize yourself with the contents of the MOTORCYCLE HANDBOOK for your state.
- Before starting engine, check for proper operation of brake, clutch, shifter, throttle controls, correct fuel and oil supply.

⚠WARNING

Do not use aftermarket parts and custom made front forks which can adversely affect performance and handling. Removing or altering factory installed parts can adversely affect performance and could result in death or serious injury. (00001a)

- Use only Harley-Davidson approved parts and accessories. Use of certain other manufacturer's performance parts will void your new motorcycle warranty. See your Harley-Davidson dealer for details.

⚠WARNING

Stop the engine when refueling or servicing the fuel system. Do not smoke or allow open flame or sparks near gasoline. Gasoline is extremely flammable and highly explosive, which could result in death or serious injury. (00002a)

⚠WARNING

Do not remove radiator filler cap when engine is hot. The cooling system is under pressure and hot coolant and steam can escape, which could cause severe burns. Allow engine to cool before servicing the cooling system. (00091a)

⚠CAUTION

At operating temperature, the radiator and oil cooler contain hot fluids. Contact with the radiator or oil cooler can result in minor or moderate burns. (00141a)

When refueling your motorcycle, the following rules should be observed.

- Refuel in a well ventilated area with the engine turned off.
- Remove fuel filler cap slowly.
- Do not smoke or allow open flames or sparks when refueling or servicing the fuel system.
- Leave air space to allow for fuel expansion.

⚠WARNING

Do not store motorcycle with gasoline in tank within the home or garage where open flames, pilot lights, sparks or electric motors are present. Gasoline is extremely flammable and highly explosive, which could result in death or serious injury. (00003a)

⚠WARNING

Engine exhaust from this product contains chemicals known to the State of California to cause cancer and birth defects or other reproductive harm. (00004e)

⚠WARNING

Wheel weights on wheels without spokes contain lead and lead compounds, chemicals known to the State of California to cause cancer and birth defects or other reproductive harm. (00356c)

⚠WARNING

Do not run motorcycle in a closed garage or confined area. Inhaling motorcycle exhaust, which contains poisonous carbon monoxide gas, could result in death or serious injury. (00005a)

⚠WARNING

The jiffy stand locks when placed in the full forward (down)

position with vehicle weight on it. If the jiffy stand is not in the full forward (down) position with vehicle weight on it, the vehicle can fall over which could result in death or serious injury. (00006a)

⚠WARNING

Be sure jiffy stand is fully retracted before riding. If jiffy stand is not fully retracted, it can contact the road surface causing a loss of vehicle control, which could result in death or serious injury. (00007a)

- A new motorcycle must be operated according to the special break-in procedure. See Break-in Riding Rules: VRSC Models.
- Operate motorcycle only at moderate speed and out of traffic until you have become thoroughly familiar with its operation and handling characteristics under all conditions.

NOTE:

We recommend that you obtain information and formal training in the correct motorcycle riding technique. In the United States, the Motorcycle Safety Foundation® offers beginning and advanced rider safety courses. Call (949)727-3227 for information.

⚠WARNING

Travel at speeds appropriate for road and conditions and never travel faster than posted speed limit. Excessive speed can cause loss of vehicle control, which could result in death or serious injury. (00008a)

- Do not exceed the legal speed limit or drive too fast for existing conditions. Always reduce speed when poor driving conditions exist. High speed increases the influence of any other condition affecting stability and increases the possibility of loss of control.
- Pay strict attention to road surfaces and wind conditions. Any two wheeled vehicle may be subject to upsetting forces such as wind blasts from passing trucks, holes in the pavement, rough road surfaces, rider control error, etc. These forces may influence the handling characteristics of your motorcycle. If this happens, reduce speed and guide the motorcycle with a relaxed grip to a controlled condition. Do not brake abruptly or force the handlebar. This may aggravate an unstable condition.
- Keep cargo weight concentrated close to the motorcycle and as low as possible to minimize the change in the motorcycle's center of gravity. Distribute weight evenly on both sides of the vehicle and do not load bulky items too far behind the rider or add weight to the handlebars or front forks. Do not exceed maximum specified load in each saddlebag.

NOTE:

New riders should gain experience under various conditions while driving at moderate speeds.

- Operate your motorcycle defensively. Remember, a motorcycle does not afford the same protection as an automobile in an accident. One of the most common accident situations occurs when the driver of the other vehicle fails to see or recognize a motorcycle and turns into the on-coming motorcyclist. Operate only with headlamp on.
- Wear an approved helmet, clothing, and foot gear suited for motorcycle riding. Bright or light colors are best for greater visibility in traffic, especially at night. Avoid loose, flowing

garments and scarves.

⚠WARNING

Avoid contact with exhaust system and wear protective clothing that completely covers legs while riding. Exhaust pipes and mufflers get very hot when engine is running and remain too hot to touch, even after engine is turned off. Failure to wear protective clothing could result in burns or other serious injury. (00009a)

- When carrying passengers, it is your responsibility to instruct them on proper riding procedures. (See Riding Tips included in your Harley-Davidson Owner's Kit.)

- Do not allow other individuals, under any circumstances, to operate your motorcycle unless you know they are experienced, licensed riders and are thoroughly familiar with the operation of your particular motorcycle.

- Protect your motorcycle against theft. After parking your motorcycle, lock the steering head and remove ignition key from switch. Set security alarm if present.
- Safe motorcycle operation requires alert mental judgment combined with a defensive driving attitude. Do not allow fatigue, alcohol or drugs to endanger your safety or that of others.
- Vehicles equipped with a sound system should have the volume adjusted to a nondistracting level before operating vehicle.
- Maintain your motorcycle in proper operating condition in accordance with Regular Service Intervals: 2008 VRSC Models. Particularly important to motorcycle stability is proper tire inflation pressure, tread condition, and proper adjustment of wheel bearings and steering head bearings.

⚠WARNING

Do not operate vehicle with forks locked. Locking the forks restricts the vehicle's turning ability, which could result in death or serious injury. (00035a)

⚠WARNING

Perform the service and maintenance operations as indicated in the regular service interval table. Lack of regular maintenance at the recommended intervals can affect the safe operation of your motorcycle, which could result in death or serious injury. (00010a)

⚠WARNING

Do not operate motorcycle with loose, worn or damaged steering or suspension systems. Contact a Harley-Davidson dealer for repairs. Loose, worn or damaged steering or suspension components can adversely affect stability and handling, which could result in death or serious injury. (00011a)

⚠WARNING

Regularly inspect shock absorbers and front forks. Replace leaking, damaged or worn parts that can adversely affect stability and handling, which could result in death or serious injury. (00012a)

⚠WARNING

Use Harley-Davidson replacement fasteners. Aftermarket fasteners can adversely affect performance, which could result in death or serious injury. (00013a)

- See a Harley-Davidson service manual for proper torque values.
- Aftermarket fasteners may not have the specific property requirements to perform properly.

⚠WARNING

Be sure tires are properly inflated, balanced and have adequate tread. Inspect your tires regularly and see a Harley-Davidson dealer for replacements. Riding with excessively worn, unbalanced or under-inflated tires can adversely affect stability and handling, which could result in death or serious injury. (00014a)

⚠WARNING

Replace punctured or damaged tires. In some cases, small punctures in the tread area may be repaired from within the demounted tire by a Harley-Davidson dealer. Speed should NOT exceed 50 mph (80 km/h) for the first 24 hours after repair, and the repaired tire should NEVER be used over 80 mph (130 km/h). Failure to follow this warning could result in death or serious injury. (00015a)

⚠WARNING

Do not exceed the motorcycle's Gross Vehicle Weight Rating (GVWR) or Gross Axle Weight Rating (GAWR). Exceeding these weight ratings can affect stability and handling, which could result in death or serious injury. (00016e)

- GVWR is the sum of the weight of the motorcycle, accessories, and the maximum weight of the rider, passenger and cargo that can be safely carried.
- GAWR is the maximum amount of weight that can be safely carried on each axle.
- The GVWR and GAWR are shown on the information plate, located on the frame down tube.

⚠WARNING

Do not tow a disabled motorcycle. Towing can adversely

Do not tow a disabled motorcycle. Towing can adversely affect stability and handling, which could result in death or serious injury. (00017a)

⚠WARNING

Do not pull a trailer with a motorcycle. Pulling a trailer can cause tire overload, reduced braking efficiency and adversely affect stability and handling, which could result in death or serious injury. (00018b)

⚠CAUTION

Direct contact of D.O.T. 4 brake fluid with eyes can cause irritation. Avoid eye contact. In case of eye contact flush with large amounts of water and get medical attention. Swallowing large amounts of D.O.T. 4 brake fluid can cause digestive discomfort. If swallowed, obtain medical attention. Use in well ventilated area. KEEP OUT OF REACH OF CHILDREN. (00240a)

⚠WARNING

Batteries, battery posts, terminals and related accessories contain lead and lead compounds, and other chemicals known to the State of California to cause cancer and birth defects or other reproductive harm. Wash hands after handling. (00019d)

⚠WARNING

Consult a Harley-Davidson dealer regarding any questions or problems that occur in the operation of your motorcycle. Failure to do so can aggravate an initial problem, cause costly repairs, cause an accident and could result in death or serious injury. (00020a)

- Be sure all equipment required by federal, state and local law is installed and in good operating condition.

⚠WARNING

If ABS lamp remains on continuously, the ABS is not operating. The standard brake system is operational, but wheel lock up can occur. Contact a Harley-Davidson Dealer to have ABS repaired. A locked wheel will skid and can cause loss of vehicle control, which could result in death or serious injury. (00361a)

⚠WARNING

ABS cannot prevent lockup of rear wheel due to engine braking. ABS will not aid in cornering or on loose/uneven surfaces. A locked wheel will skid and can cause loss of vehicle control, which could result in death or serious injury. (00362a)

Rules of the Road

- Always sound your horn, actuate your turn signals, and exercise caution when passing other vehicles going in the same direction. Never try to pass another vehicle going in the same direction at street intersections, on curves, or when going up or down a hill.
- At street intersections give the right-of-way. Do not presume you have the right-of-way, as the other driver may not know it is your turn.
- Always signal when preparing to stop, turn or pass.
- All traffic signs, including those used for the control of traffic at intersections, should be obeyed promptly. SLOW DOWN signs near schools and CAUTION signs at railroad crossings should always be observed and your actions governed accordingly.
- When intending to turn, signal at least 100 feet 30.5 meters before reaching the turning point. If turning across an intersection, move over to the centerline of the street (unless local rules require otherwise). Slow down when entering the intersection and turn carefully.
- Never anticipate a traffic light. When a change is indicated from GO to STOP (or vice versa) in the traffic control systems at intersections, slow down and wait for the light to change. Never run through a yellow or red traffic light.
- While turning either right or left, watch for pedestrians, animals, as well as vehicles.
- Do not leave the curb or parking area without signaling. Be sure your way is clear to enter moving traffic. A moving line of traffic always has the right-of-way.
- Be sure your license plate is installed in the position specified by law and is clearly visible at all times. Keep the plate clean.
- Ride at a safe speed that is consistent with the type of highway you are on. Pay strict attention to whether the road is dry, oily, icy or wet.
- Watch for debris such as leaves or loose gravel.
- Weather and traffic conditions on the highway dictate adjusting your speed and driving habits accordingly.

Accessories and Cargo

Harley-Davidson Motor Company cannot test and make specific recommendations concerning every accessory or combination of accessories sold. Therefore, the rider must be responsible for safe operation of the motorcycle when installing accessories or carrying additional weight.

⚠WARNING

See the Accessory and Cargo section in your Owner's Manual. Improper loading of cargo or installation of accessories can affect motorcycle stability and handling, which could result in death or serious injury. (00021a)

⚠WARNING

Do not exceed the motorcycle's Gross Vehicle Weight

Do not exceed the motorcycle's Gross Vehicle Weight Rating (GVWR) or Gross Axle Weight Rating (GAWR). Exceeding these weight ratings can affect stability and handling, which could result in death or serious injury. (00016e)

- GVWR is the sum of the weight of the motorcycle, accessories, and the maximum weight of the rider, passenger and cargo that can be safely carried.
- GAWR is the maximum amount of weight that can be safely carried on each axle.
- The GVWR and GAWR are shown on the information plate which is located on the frame down tube.

⚠WARNING

Do not pull a trailer with a motorcycle. Pulling a trailer can cause tire overload, reduced braking efficiency and adversely affect stability and handling, which could result in death or serious injury. (00018b)

Accessory and Cargo Guidelines

The following guidelines should be used when equipping a motorcycle, carrying passengers and/or cargo.

⚠WARNING

Travel at speeds appropriate for road and conditions and never travel faster than posted speed limit. Excessive speed can cause loss of vehicle control, which could result in death or serious injury. (00008a)

- Do not exceed the legal speed limit or drive too fast for existing conditions. Always reduce speed when poor driving conditions exist. High speed increases the influence of any other condition affecting stability and increases the possibility of loss of control.
- Pay strict attention to road surfaces and wind conditions. Any two wheeled vehicle may be subject to upsetting forces such as wind blasts from passing trucks, holes in the pavement, rough road surfaces, rider control error, etc. These forces may influence the handling characteristics of your motorcycle. If this happens, reduce speed and guide the motorcycle with a relaxed grip to a controlled condition. Do not brake abruptly or force the handlebar. This may aggravate an unstable condition.
- Keep cargo weight concentrated close to the motorcycle and as low as possible. This minimizes the change in the motorcycle's center of gravity.
- Distribute weight evenly on both sides of the vehicle.
- Do not load bulky items too far behind the rider or add weight to the handlebars or front forks.
- Do not exceed maximum specified load in each saddlebag.
- Luggage racks are designed for lightweight items. Do not overload racks.
- Be sure cargo is secure and will not shift while riding and recheck the cargo periodically. Accessories that change the operator's riding position may increase reaction time and affect handling of the motorcycle.
- Additional electrical equipment may overload the motorcycle's electrical system possibly

resulting in electrical system and/or component failure.

⚠WARNING

The front and/or rear guard(s) can provide limited leg and cosmetic vehicle protection under unique circumstances. (Fall over while stopped, very slow speed slide.) It is not made or intended to provide protection from bodily injury in a collision with another vehicle or any other object. (00022a)

Large surfaces such as fairings, windshields, back rests, and luggage racks can adversely affect handling. Only genuine Harley-Davidson items designed specifically for the motorcycle model should be used with proper installation.

⚠WARNING

Do not use aftermarket parts and custom made front forks which can adversely affect performance and handling. Removing or altering factory installed parts can adversely affect performance and could result in death or serious injury. (00001a)

⚠WARNING

Only Touring Harley-Davidson Motorcycles are suitable for sidecar use. Consult a Harley-Davidson dealer. Use of motorcycles other than Touring models with sidecars could result in death or serious injury. (00040a)

Noise Control System

Tampering

Owners are warned that removal or replacement of any noise control system component may be prohibited by law. This prohibition applies prior to vehicle sale or delivery to the ultimate purchaser. Use of a vehicle on which noise control system components have been removed or rendered inoperative may also be prohibited by law.

Identification

Vehicle Identification Number: VRSC Models

See V.I.N. Stamping Location: VRSC Models. The full 17-digit serial or Vehicle Identification Number (V.I.N.) is stamped on the steering head and on a label located on the left frame tube above the front engine cylinder.

An abbreviated V.I.N. is stamped on the left side crankcase above the sump.

NOTE:

Always give the full 17-digit Vehicle Identification Number when ordering parts or making any inquiry about your motorcycle.

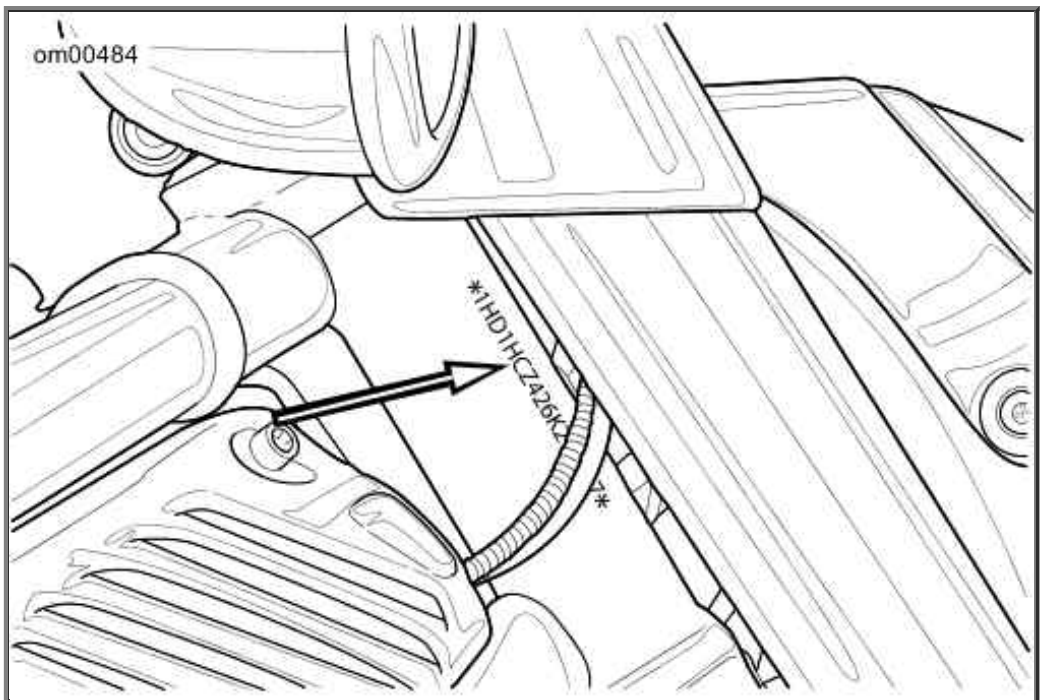

V.I.N. Stamping Location: VRSC Models

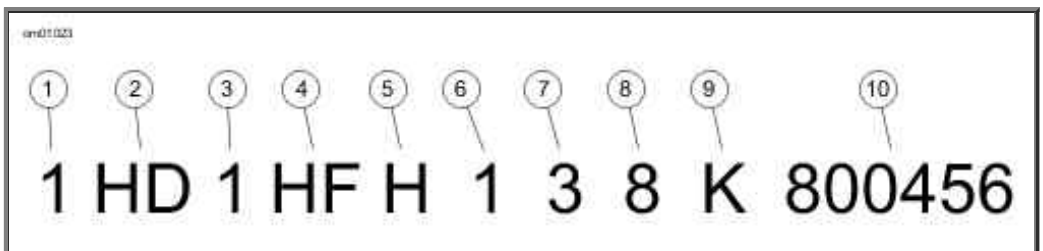

Typical Harley-Davidson V.I.N.: 2008 VRSC Models

Harley-Davidson V.I.N. Breakdown: 2008 VRSC Models

POSITION	DESCRIPTION	POSSIBLE VALUES
1	Market designation	1=Originally manufactured for sale **within** the United States 5=Originally manufactured for sale **outside** the United States
2	Manufacturer	HD=Harley-Davidson
3	Motorcycle type	1=Heavyweight motorcycle (901 cc and larger)
4	Model	See V.I.N. model table
5	Engine type	H=Revolution®, 1250 cc liquid-cooled, fuel injected J=Revolution®, 1250 cc liquid-cooled, fuel injected 105 HP HDI only
6	Introduction date	1=Regular 2=Mid-year 3=California/regular 4=Cosmetic changes and/or special introductory date

		5=California/cosmetic changes and/or special introductory date 6=California/mid-year
7	V.I.N. check digit	Can be 0-9 or X
8	Model year	8=2008
9	Assembly plant	K=Kansas City, MO U.S.A.
10	Sequential number	varies

Labels

See Labels: VRSC Models for safety and maintenance labels which were on the vehicle when new. If removed, replacement labels may be purchased for your motorcycle. Refer to Labels: VRSC Models for label descriptions.

Labels: VRSC Models

LABEL	PART NO.	DESCRIPTION	LOCATION
1	15348-01A	General warnings	Rear of airbox cover.
2	15368-01A	Battery warning	Under seat behind the fuel tank.
3	15369-01	Check oil level	On right side of frame behind fuel filler cap.
4	15367-08 (VRSCAW)	Anti-tampering label	Under seat on right frame tube.
	15396-08 (VRSCD/VRSCDX)		
5	13725-08 (ABS-models)	Fuse block labels	Label with START RELAY and FAN RELAY is on fuse block located on top right of battery tray. Other half of label is on fuse block under passenger seat, behind fuel filler.
	13694-08 (Non-ABS)		

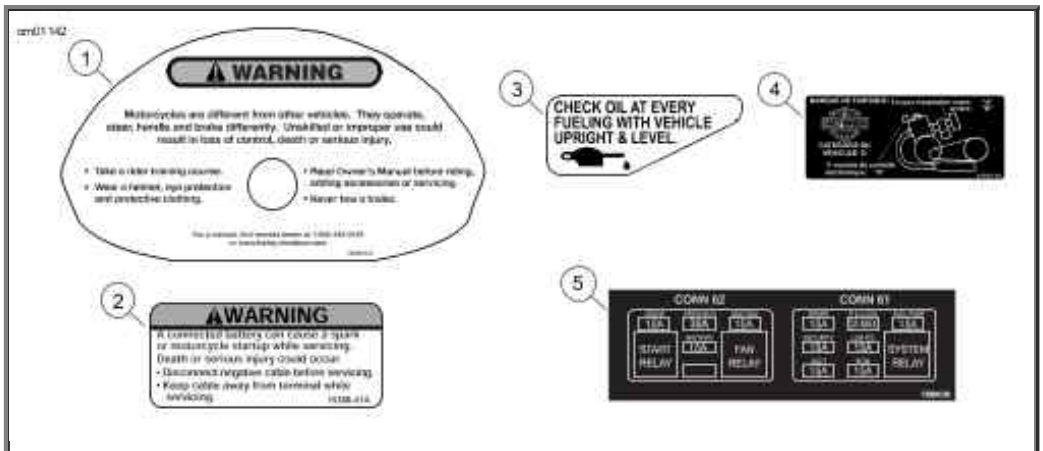

Labels: VRSC Models

ABS-Equipped Vehicles: VRSC Models

Specifications and instructions for VRSCAW, VRSCD and VRSCDX model motorcycles also apply to the equivalent ABS-equipped models (VRSCAWA, VRSCDA and VRSCDXA respectively) unless otherwise noted.

Specifications

Specifications: 2008 VRSC Models

Engine: 2008 VRSC Models

ITEM	SPECIFICATION	
Number of cylinders	2	
Type	4-cycle, DOHC, 60 degree V-Type, water cooled	
Compression ratio	11.3-1	
Bore	4.134 in.	105.00 mm
Stroke	2.835 in.	72.00 mm
Displacement	76.28 cu. in.	1250 cc

NOTE:

Specifications in this publication may not match those of official certification in some markets due to timing of publication printing, variance in testing methods, and/or vehicle differences. Customers seeking officially recognized regulatory specifications for their vehicle should refer to certification documents and/or contact their respective dealer or distributor.

Ignition System: 2008 VRSC Models

ITEM	SPECIFICATION	
Timing setting	Not adjustable	
Battery	12 volt, 19 amp/hr, 270 CCA	
Spark plug type	10R12A	
Spark plug gap	0.035 in.	0.89 mm

Spark plug gap	0.035 in.	0.89 mm
Spark plug torque	17 ft-lbs	23 Nm

Engine Torque: 2008 VRSC Models

MODEL	TORQUE	
VRSCAW (DOM/HDI)	84.00 ft-lbs @7000 RPM	113.90 Nm @7000 RPM
VRSCAW (France opt. Germany)	80.00 ft-lbs @6500 RPM	118.48 Nm @6500 RPM
VRSCAW (Japan)	77.00 ft-lbs @7000 RPM	104.41 Nm @7000 RPM
VRSCD, VRSCDX (DOM)	85.00 ft-lbs @7000 RPM	115.26 Nm @7000 RPM
VRSCD, VRSCDX (HDI)	83.00 ft-lbs @7500 RPM	112.55 Nm @7500 RPM
VRSCD, VRSCDX (France opt. Germany)	78.00 ft-lbs @7000 RPM	105.77 Nm @7000 RPM
VRSCD, VRSCDX (Japan)	79.00 ft-lbs @7000 RPM	107.12 Nm @7000 RPM

Capacities: 2008 VRSC Models

ITEM	U.S.	LITERS
Fuel tank	5.0 gal	18.93
Low fuel warning lamp on	1.0 gal	3.8
Oil capacity with filter	4.5 qt.	4.26
Coolant capacity	2.50 qt.	2.37

Transmission: 2008 VRSC Models

ITEM	SPECIFICATION
Type	foot shift
Speeds	5 forward
Gears	1st, 5th spur gears 2nd, 3rd, 4th helical gears

Drivetrain: 2008 VRSC Models

COMPONENT	TYPE
Primary drive	gear
Final drive	belt

Final drive	belt
Rear sprocket	compensated
Clutch	hydraulic

Sprocket Teeth: 2008 VRSC Models

ITEM	DOMESTIC	INTERNATIONAL
Transmission	28	30
Rear wheel	72	72
Ratio	0.42	0.39

Gear Ratios: 2008 VRSC Models

GEAR	DOMESTIC	INTERNATIONAL
1st gear	11.752	10.969
2nd gear	7.898	7.371
3rd gear	6.322	5.900
4th gear	5.459	5.095
5th gear	4.889	4.563

Dimensions: 2008 VRSC Models

ITEM	VRSCAW		VRSCD		VRSCDX	
	IN.	MM	IN.	MM	IN.	MM
Wheelbase	67.20	1706.88	67.20	1706.88	67.20	1706.88
Overall length	94.40	2397.76	94.40	2397.76	94.40	2397.76
Overall width	34.50	876.30	37.30	947.42	34.60	878.84
Overall height	47.70	1211.58	45.00	1143.00	45.50	1155.70
Road clearance	5.00	127.00	5.00	127.00	4.20	106.68
Saddle height*	26.00	660.40	26.00	660.40	25.20	640.08
*With 180 lb. (82 kg) rider on seat.						

Weights: 2008 VRSC Models

ITEM	VRSCAW, VRSCD		VRSCAWA, VRSCDA		VRSCDX		VRSCDXA	
	LB.	KG	LB.	KG	LB.	KG	LB.	KG
Weight (as shipped from factory)	637	289	641	291	643	291.6	647	293
GVWR	1075	488	1075	488	1075	488	1075	488
GAWR Front	377	171	377	171	377	171	377	171

GAWR Rear	698	317	698	317	698	317	698	317

NOTE:

Gross Vehicle Weight Rating GVWR (maximum allowable loaded vehicle weight) and corresponding Gross Axle Weight Ratings (GAWR) are given on a label located on the left frame tube above the front engine cylinder.

Tire Sizes: 2008 VRSC Models

MODEL	MOUNT	SIZE	NUMBER
VRSCAW	Front	19 in.	D208F 120/70ZR19 60W
	Rear	18 in.	D419 240/40R18 79V
VRSCD	Front	19 in.	D208F 120/70ZR19 60W
	Rear	18 in.	D207 180/55ZR18 74W
VRSCDX	Front	19 in.	D208F 120/70ZR19 60W
	Rear	18 in.	D419 240/40R18 79V
All 2008 models use Dunlop radial tires only.			

Tire Pressures: 2008 VRSC Models

MODEL	LOAD	TIRE PRESSURE (COLD)			
		FRONT		REAR	
		PSI	kPa	PSI	kPa
VRSCAW, VRSCDX	solo rider	36	248	38	262
	rider and passenger	36	248	42	290
VRSCD	solo rider	36	248	38	262
	rider and passenger	36	248	40	276

Bulb Chart: 2008 VRSC Models

LAMP	DESCRIPTION (ALL LAMPS 12 VOLT)	BULBS REQUIRED	CURRENT DRAW (AMPERAGE)	H-D PART NUMBER
Headlamp VRSCAW	low beam	1	4.30	68881-01
	high beam	1	5.10	67717-01
Headlamp VRSCD, VRSCDX	low beam/high beam	1	4.58/5.00	68329-03
Position lamp international	position lamp	1	0.36	53436-97
Tail and stop	tail lamp	1	0.59	68168-

Tail and stop lamp	tail lamp	1	[illegible]	[illegible] 89A
	stop lamp	1	2.25	68168-89A
	license plate illumination	2	0.33	68193-95
	tail lamp international	1	0.42	68169-90A
	stop lamp international	1	1.75	68169-90A
	license plate illumination international	2	0.37	53436-97
Turn signal lamp	front/running	2	2.25/0.59	68168-89
	rear	2	2.25	68572-64B
	front/running international	2	1.75	68163-84
	rear international	2	1.75	68163-84
Instrument cluster	Illuminated with LEDs. Replace entire assembly upon failure.			

Tire Data: VRSC Models

⚠WARNING

Match tires, tubes, air valves and caps to the correct wheel rim. Contact a Harley-Davidson dealer. Mismatching can result in damage to the tire bead, allow tire slippage on the rim or cause tire failure, which could result in death or serious injury. (00023a)

⚠WARNING

Use only Harley-Davidson approved tires. See a Harley-Davidson dealer. Using non-approved tires can adversely affect stability, which could result in death or serious injury. (00024a)

Tubeless tires are used on all Harley-Davidson cast and disc wheels.

Tire sizes are molded on the tire sidewall. Inner tube sizes are printed on the tube.

⚠WARNING

Harley-Davidson front and rear tires are not the same. Interchanging front and rear tires can cause tire failure, which could result in death or serious injury. (00026a)

⚠WARNING

Do not inflate tire beyond maximum pressure as specified on sidewall. Over inflated tires can blow out, which could result in death or serious injury. (00027a)

⚠WARNING

Harley-Davidson tires are equipped with wear bars that run horizontally across the tread. When wear bars become visible and only 1/32 in. (0.8 mm) tread depth remains, replace tire immediately. Using a worn tire can adversely affect stability and handling, which could result in death or serious injury. Use only Harley-Davidson approved replacement tires. (00090b)

See Specifications: 2008 VRSC Models for tire pressures and sizes.

Catalytic Converters: VRSC Models

All international (HDI) motorcycles are equipped with catalytic converters. Domestic and destination Japan motorcycles are not equipped with catalytic converters.

CAUTION

Do not operate catalytic converter-equipped vehicle with engine misfire or a non-firing cylinder. If you operate the vehicle under these conditions, the exhaust will become abnormally hot, which can cause vehicle damage, including emission control loss. (00149a)

Gasoline Blends

Your motorcycle was designed to get the best performance and efficiency using unleaded gasoline. Most gasoline is blended with alcohol and/or ether to create oxygenated blends. The type and amount of alcohol or ether added to the fuel is important.

CAUTION

Do not use gasoline that contains methanol. Doing so can result in fuel system component failure, engine damage and/or equipment malfunction. (00148a)

- Gasoline containing METHYL TERTIARY BUTYL ETHER (MTBE): Gasoline/MTBE blends are a mixture of gasoline and as much as 15% MTBE. Gasoline/MTBE blends can be used in your motorcycle.
- ETHANOL is a mixture of 10% ethanol (Grain alcohol) and 90% unleaded gasoline. Gasoline/ethanol blends can be used in your motorcycle if the ethanol content does **not** exceed 10%.
- REFORMULATED OR OXYGENATED GASOLINES (RFG): Reformulated gasoline is a

term used to describe gasoline blends that are specifically designed to burn cleaner than other types of gasoline, leaving fewer tailpipe emissions. They are also formulated to evaporate less when you are filling your tank. Reformulated gasolines use additives to oxygenate the gas. Your motorcycle will run normally using this type of gas and Harley-Davidson recommends you use it when possible, as an aid to cleaner air in our environment.

Some gasoline blends might adversely affect the starting, driveability or fuel efficiency of the motorcycle. If any of these problems are experienced, try a different brand of gasoline or gasoline with a higher octane blend.

Fuel

Refer to Octane Ratings. Always use a good quality unleaded gasoline. Octane ratings are usually found on the pump.

⚠WARNING

Avoid spills. Slowly remove filler cap. Do not fill above bottom of filler neck insert, leaving air space for fuel expansion. Secure filler cap after refueling. Gasoline is extremely flammable and highly explosive, which could result in death or serious injury. (00028a)

⚠WARNING

Use care when refueling. Pressurized air in fuel tank can force gasoline to escape through filler tube. Gasoline is extremely flammable and highly explosive, which could result in death or serious injury. (00029a)

Modern service station pumps dispense a high flow of gasoline into a motorcycle fuel tank making air entrapment and pressurization a possibility.

Octane Ratings

SPECIFICATION	RATING
Pump Octane (R+M)/2	91 (95 RON)

Controls and Indicators

General: Controls and Indicators

⚠WARNING

Read the CONTROLS AND INDICATORS section before riding your motorcycle. Failure to understand the operation of the motorcycle could result in death or

serious injury. (00043a)

Some features explained are unique to certain models. These features may be available as accessories for your Harley-Davidson motorcycle. See a Harley-Davidson dealer for a complete list of accessories that will fit your specific motorcycle.

Ignition Switch: VRSC Models

⚠WARNING

The automatic-on headlamp feature provides increased visibility of the rider to other motorists. Be sure headlamp is on at all times. Poor visibility of rider to other motorists can result in death or serious injury. (00030b)

See the YOUR OWNER'S MANUAL section at the beginning of this manual. Be sure to record all your key numbers in the space provided at the front of this book.

The ignition switch controls electrical functions of the motorcycle.

CAUTION

Protect your vehicle against theft. After parking your motorcycle, lock the steering head and ignition switch. Failure to lock your motorcycle can result in theft and/or equipment damage. (00491c)

⚠WARNING

Do not operate vehicle with forks locked. Locking the forks restricts the vehicle's turning ability, which could result in death or serious injury. (00035a)

CAUTION

Do not lubricate barrel locks with petroleum based lubricants or graphite. Inoperative locks may result. (00152a)

CAUTION

Turn the ignition switch to the OFF position before locking the motorcycle. Leaving the switch in the ACC position will keep the instrument lights on and result in a discharged battery. (00492b)

To review the functions of each switch position, refer to Ignition Switch: 2008 VRSC Models.

1. See Ignition Switch: VRSC Models. To remove the key from the ignition, turn it to the OFF position.

2. To remove the key from ignition, pull the key outward.

3. Always turn switch to LOCK position and remove key after operation and when leaving bike parked.

NOTES:

- *ACC-Accessories and hazard warning flasher can be turned on. Instrument lamps are on. Brake lamp and horn can be activated. Key may be removed.*
- *The lamps operate when the switch is in the IGN position, as required by law in some localities.*
- *Harley-Davidson recommends removing key from ignition/fork lock before operating motorcycle. If you do not remove key, it can fall out during operation.*
- *The ignition key also fits the front fork lock.*

Ignition Switch: 2008 VRSC Models

SWITCH POSITION	REMOVE KEY	FUNCTIONS
OFF	Yes	Turns off ignition, lamps and accessories (disconnects battery voltage from IGN and ACC terminals).
ACC	Yes	Turns on accessories. Hazard warning flashers can be operated. Instrument lamps are on. Brake lamp and horn can be activated (connects battery voltage to ACC terminal). NOTE: When switching to the ACC position, a startup diagnostic performs a systems check. The instrument background lighting illuminates, gauge needles sweep their full range of motion and the battery, security, coolant temperature and check engine indicator lamps illuminate.
IGN	Yes	Turns on ignition, lamps and accessories.

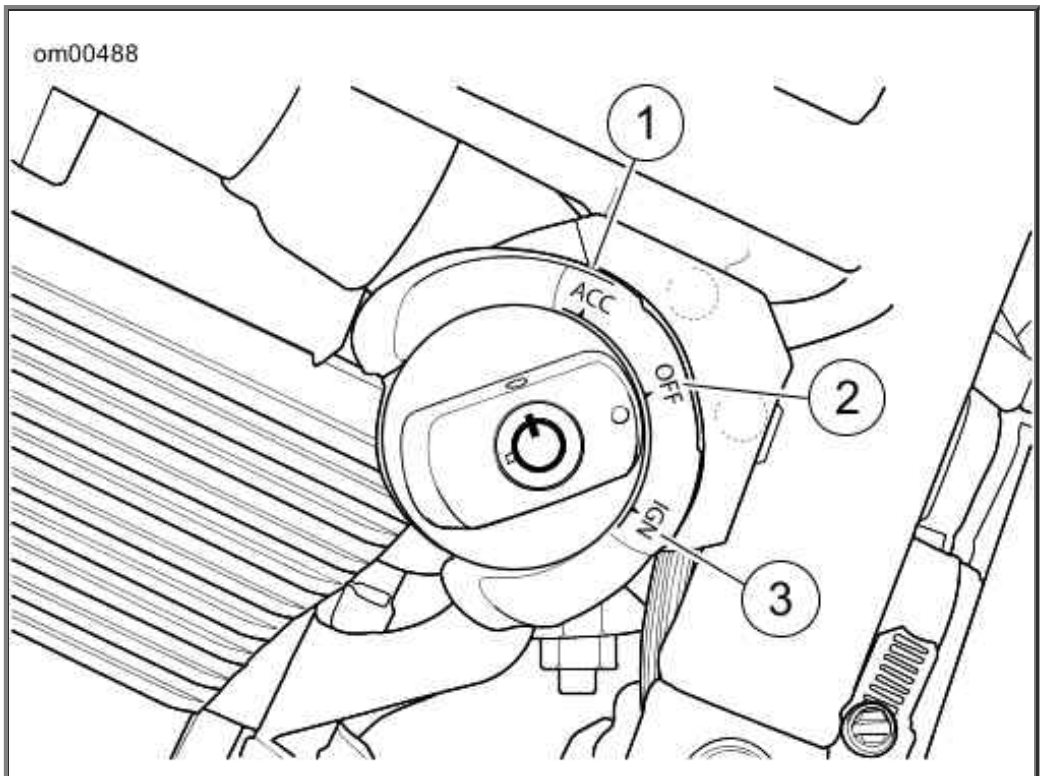

1. Accessory position
2. OFF position
3. Ignition position

Ignition Switch: VRSC Models

Hand Controls: Basic Operation

Electric Starter Switch

NOTE:

Off/Run switch MUST be in RUN position to operate engine.

See Handlebar Controls: VRSC Models. The electric starter switch is located on the right handlebar control group. See Starting the Engine: VRSC Models for detailed operation procedures.

1. Put the engine off/run switch in the RUN position and the transmission in neutral. Neutral (green) indicator lamp should be illuminated.
2. See Ignition Switch: VRSC Models. Turn ignition/headlamp key switch to IGNITION and push the START switch to operate starter motor.

Engine OFF/RUN Switch

See Handlebar Controls: VRSC Models. The engine off/run switch (7) turns the ignition power ON or OFF. The engine off/run switch is located on the right handlebar control. Push the top portion of the engine off/run switch to turn off ignition power and shut the engine off. Push the bottom portion of the engine off/run switch to turn on ignition power.

NOTES:

- *The engine off/run switch must be in the RUN position to start or operate the engine.*

- *The engine off/run switch should be used to shut the engine off.*

1. To shut the engine off, push the top of the off/run switch to the ignition OFF position.
2. See Ignition Switch: VRSC Models. Turn the ignition key to the OFF position to turn the ignition power completely OFF.

Throttle Control Grip

See Handlebar Controls: VRSC Models. The throttle control grip (9) is located on the right handlebar control and is operated with the right hand.

To reduce rider fatigue on long trips, a spring loaded throttle friction adjustment screw (10) is located at the bottom of the throttle grip clamp on non-cruise equipped models.

1. Slowly turn throttle control grip clockwise (toward the front of the bike) to close the throttle (decelerate).
2. Slowly turn throttle control grip counterclockwise (toward rear of bike) to open the throttle (accelerate).

⚠WARNING

Do not tighten throttle friction adjustment screw to the point where the engine will not return to idle automatically. Over-tightening can lead to loss of vehicle control, which could result in death or serious injury. (00031b)

3. Unscrew the throttle friction adjustment screw so the throttle returns to the idle position when the hand is removed from the grip.
4. Screw the throttle adjustment screw in to increase friction on grip. This provides a damping effect on throttle motion.

NOTE:

The throttle friction adjustment screw should not be used under normal stop and go operating conditions.

Clutch Hand Lever

⚠WARNING

Do not position fingers between hand control lever and handlebar grip. Improper hand positioning can impair control lever operation and cause loss of vehicle control, which could result in death or serious injury. (00032a)

See Handlebar Controls: VRSC Models. The clutch hand lever (1) is located on the left handlebar and is operated with the fingers of the left hand.

1. Slowly pull clutch hand lever in against handlebar grip to fully disengage clutch.

2. Shift to first gear using the gear shifter lever. See Shifting Gears.
3. Slowly release the clutch hand lever to engage clutch.

A clutch switch is incorporated into the left handlebar switch assembly. It enables the rider to start the vehicle in any gear (or in neutral) as long as the clutch lever is pulled in. If the clutch is not disengaged, the vehicle will not start.

Horn Switch

See Handlebar Controls: VRSC Models. The horn is operated by pushing on the horn switch (2) located on the left handlebar control group.

Headlamp Dimmer Switch

See Handlebar Controls: VRSC Models. The headlamp dimmer switch (3) is located on the left handlebar. The switch has two positions to activate the headlamps high or low beams.

- Press the top of the headlamp dimmer beam switch to activate the high beam.
- Press the bottom of the headlamp dimmer switch to return to the low beam.

See Indicator Lamps: VRSC Models. The (blue) high beam indicator lamp will illuminate when the high beam is on.

Turn Signal Switches

See Handlebar Controls: VRSC Models. Each handlebar control group contains a turn signal switch.

- The right turn signal switch (11) operates the right front and right rear flashing lamps.
- The left turn signal switch (4) operates the left front and left rear flashing lamps.

NOTE:

Front turn signal lamps also function as running lamps (except International models).

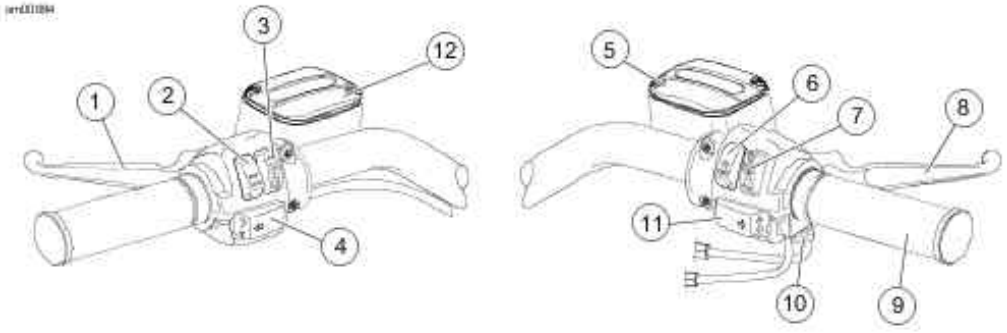

1. Clutch hand lever
2. Horn switch
3. Headlamp dimmer switch
4. Left turn signal switch
5. Front brake master cylinder reservoir
6. Electric starter switch
7. Engine off/run switch
8. Brake hand lever
9. Throttle control grip
10. Throttle friction adjusting screw
11. Right turn signal switch
12. Clutch master cylinder reservoir

Handlebar Controls: VRSC Models

Turn Signal Switch Operation

The turn signal switches are used by the turn signal module to control turn signal operation based on vehicle speed, vehicle acceleration and turn completion.

Momentarily depress the desired turn signal switch. The turn signal lamps will begin and continue flashing until they are manually or automatically cancelled. As long as the motorcycle is stationary, the signals will flash.

NOTES:

- *If you are signaling to turn in one direction and you depress the switch for the opposite turn signal, the first signal is cancelled and the opposite side begins flashing.*
- *If you want to stop the lamps from flashing, briefly depress the turn signal switch a second time. The turn signal lamps will stop flashing.*

Hazard Warning 4-Way Flasher

Use the following method to activate the four-way flashers.

1. With the ignition key ON and security system disarmed (models with security only), press the left and right turn signal switches at the same time.

2. Turn the ignition key OFF and arm the security system if present and desired. The four-way flashers will continue for two hours.

3. To cancel four-way flashing, disarm the security system if necessary, turn the ignition key ON and press the left and right turn signal switches at the same time.

This system allows a stranded vehicle to be left in the four-way flashing mode and secured until

help is found.

Indicator Lamps: VRSC Models

See Indicator Lamps: VRSC Models. Eleven indicator lamps are provided in the instrument cluster.

- The two green TURN indicator lamps flash when turn signals are activated; therefore, flashing indicates the chosen turn direction. When the 4-way hazard flashers are operating, both turn indicators flash simultaneously.
- The blue HIGH BEAM indicator lamp, when lit, signals high beam headlamp operation.
- The green NEUTRAL lamp, when lit, signals the transmission is in neutral gear.
- The red OIL PRESSURE indicator lamp, when lit, signals that oil is not circulating through the engine.
- The red ENGINE COOLANT TEMPERATURE indicator lamp, when lit, signals the coolant temperature has exceeded 243° F (117° C).
- The red ENGINE DIAGNOSTIC indicator lamp, when lit, signals that the vehicle's computer has detected an engine malfunction.
- The red ALTERNATOR indicator lamp, when lit, signals there is a malfunction in the charging circuit and the battery is not being properly charged.
- The red SECURITY STATUS indicator lamp indicates the status of the vehicle's security system. It is normal for this to light with or without a security system.
- The yellow LOW FUEL indicator lamp, when lit, signals the fuel tank is almost empty.
- On ABS equipped models, the amber ABS indicator lamp begins to flash at key ON to indicate that the system is operational. It continues to flash until motorcycle speed exceeds 3 mph 5 km/h . Continuous illumination of the lamp will only occur when ABS detects that the system is malfunctioning. In the diagnostic mode, the lamp will also illuminate to indicate the presence of diagnostic trouble codes (DTCs). See a Harley-Davidson dealer for service.

⚠WARNING

If ABS lamp remains on continuously, the ABS is not operating. The standard brake system is operational, but wheel lock up can occur. Contact a Harley-Davidson Dealer to have ABS repaired. A locked wheel will skid and can cause loss of vehicle control, which could result in death or serious injury. (00361a)

NOTES:

- *The OIL PRESSURE indicator lamp will glow when the ignition is turned on prior to starting the engine. With the engine running, the lamp should be off when engine speed is above idle.*
- *To learn more about the SECURITY STATUS indicator lamp, see the H-D Factory Security Section later in this manual.*

Several other circumstances that could cause the red oil pressure indicator lamp to illuminate include:

- An insufficient or diluted oil supply causing the oil pressure indicator lamp to remain lit at speeds above idling.
- An oil feed clogged with ice and sludge in freezing weather, preventing oil circulation.
- A grounded oil signal switch wire.
- A faulty oil signal switch.

- A damaged or improperly installed check valve.
- Trouble with the oil pump.

CAUTION

If the oil pressure indicator lamp remains lit, always check the oil supply first. If the oil supply is normal and the lamp is still lit, stop the engine at once and do not ride further until the trouble is located and the necessary repairs are made. Failure to do so may result in engine damage. (00157a)

Several other circumstances that could cause the red engine coolant temperature indicator lamp to illuminate include:

- Cooling fan malfunction.
- Low coolant level.
- Thermostat malfunction.
- Temperature gauge malfunction.
- Blocked coolant passages.
- Radiator cap malfunction.
- Coolant malfunction.

CAUTION

If the engine coolant temperature indicator lamp remains lit, always check the coolant level. If the coolant level is normal and the lamp is still lit, stop the engine at once and do not ride further until the trouble is located and the necessary repairs are made. Failure to do so may result in engine damage. (00158a)

⚠WARNING

Do not remove radiator filler cap when engine is hot. The cooling system is under pressure and hot coolant and steam can escape, which could cause severe burns. Allow engine to cool before servicing the cooling system. (00091a)

1. Left turn
2. High beam
3. Neutral
4. Oil
5. Engine coolant
6. Right turn
7. Low fuel
8. Security system
9. ABS
10. Alternator
11. Engine diagnostic

Indicator Lamps: VRSC Models

Instruments: VRSC Models

Speedometer

⚠WARNING

Travel at speeds appropriate for road and conditions and never travel faster than posted speed limit. Excessive speed can cause loss of vehicle control, which could result in death or serious injury. (00008a)

See Instrument Cluster: VRSC Models. The speedometer registers miles per hour (U.S. models) or kilometers per hour (international models) of forward speed. The speedometer also provides the following selectable functions:

- Odometer
- Trip odometers A and B
- 12 or 24 hour clock
- Fuel range

CAUTION

Never attempt to tamper with or alter the vehicle odometer. This is illegal. Tampering with or altering a vehicle odometer may cause equipment damage. (00160a)

The speedometer has a single display window for the above functions.

1. See Instrument Cluster: VRSC Models. Pressing the function switch with the ignition switch in any position will activate the odometer reading and time. Time and mileage or kilometers may be checked without unlocking ignition switch. Press and release function switch once to view odometer. Press and release switch again to display time.

2. To check mileage on trip odometers, the ignition switch must be in the ACC or IGNITION position. Press and release the function switch until the desired trip odometer reading is displayed. An 'A' or 'B' in the upper left of the display window identifies trip odometers.

3. To reset or zero trip odometers, have desired odometer (A or B) in display window. Press function switch and hold switch for 2-3 seconds. The trip odometer will be reset to zero.

4. Repeat the previous step if you wish to zero both trip odometers.

Setting Clock

---

1. Turn the ignition switch to ACC or IGNITION.

2. See Instrument Cluster: VRSC Models. Press function switch until time (hour and minutes) is displayed. Press and hold the function switch for five seconds or until 12HR begins to blink in the speedometer display window. Release the button.

3. Press and release the function switch once to advance to a blinking 24HR military style time display. Each time you press and release the button, the display will switch between 12HR and 24HR.

4. When the desired time style is displayed, press and hold the function switch for five seconds. The display will switch to the time display with the hours blinking.

5. Press and release the function switch repeatedly to advance the hours. Each time you press and release the switch, the display will advance one hour.

   NOTE:

   No AM or PM time setting is required. When correct hour is reached, press and hold function switch to advance to minute setting.

6. When the correct hour is displayed, press and hold the function switch for five seconds. The minutes display will start blinking.

7. Press and release the function switch repeatedly to advance the minutes display. Each time you press and release the button, the display will advance one minute.

8. When the correct minutes are displayed, press and hold the function switch for five seconds. The minutes display will stop blinking, indicating that the clock has been set.

9. Turn the ignition switch OFF.

Fuel Range Function

The fuel range function shows the approximate mileage available with the amount of fuel currently in the fuel tank.

1. With the ignition switch in the ACC or IGNITION position, press function switch until fuel

range function is displayed, as indicated by the letter 'r' in the left side of the display. The calculated remaining distance (miles or kilometers) before empty is displayed, based on the amount of fuel in tank.

2. When low fuel lamp lights, the fuel range function displays "r lo" and no miles (kilometers) are shown in the fuel range display.

   NOTE:

   When low fuel lamp lights, there is approximately 1.0 gallon (3.8 liters) of fuel remaining in tank. Refuel as soon as possible.

3. After low fuel lamp lights, the speedometer displays the trip odometer (A or B) and automatically resets the trip odometer to zero. The trip odometer will display the distance traveled since the low fuel lamp lit.

Tachometer

See Instrument Cluster: VRSC Models. The tachometer registers the engine speed in revolutions per minute (RPM).

CAUTION

See OPERATING RECOMMENDATIONS section. Do not operate the engine above maximum safe RPM as shown under OPERATION (red zone on tachometer). Lower the RPM by upshifting to a higher gear or reducing the amount of throttle. Failure to lower RPM may cause equipment damage. (00159a)

Tip Indicator Lamp

⚠WARNING

If tip occurs, check all controls for proper operation. Restricted control movement can adversely affect the performance of the brakes, clutch or ability to shift, which could result in loss of vehicle control and death or serious injury. (00350a)

Should motorcycle be tipped over, the word "tip" will appear in the odometer window. Engine will not start until reset. To reset, cycle ignition/headlamp key switch ON-OFF-ON.

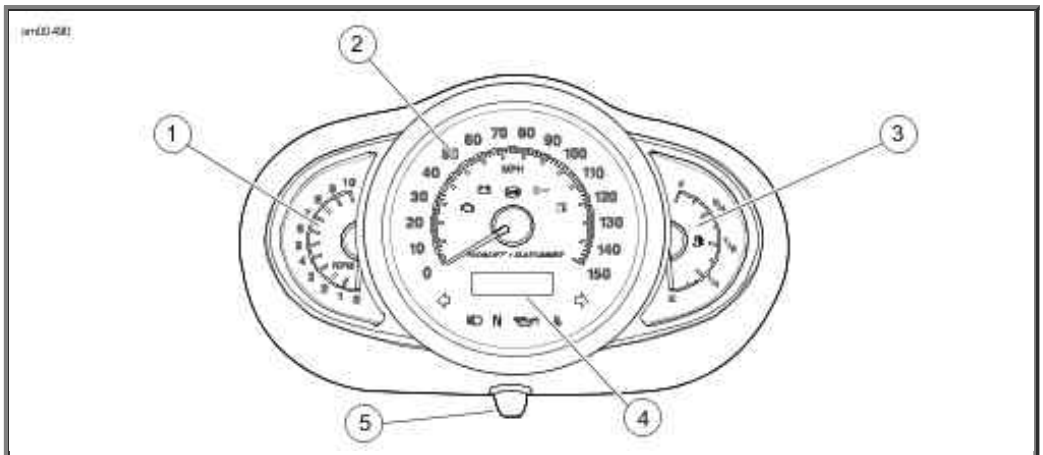

1. Tachometer
2. Speedometer
3. Fuel gauge
4. Odometer/trip-odometer/clock/fuel range display
5. Odometer reset/clock-set switch

Instrument Cluster: VRSC Models

Sequential Port Fuel Injection

Check Engine Lamp

See Check Engine and Low Fuel Lamp: VRSC Models. The engine check lamp is located inside the instrument cluster. Its purpose is to indicate whether or not the engine/engine management system is operating normally. The engine lamp color is red.

The engine lamp normally comes on when the bike's ignition is first turned on and remains on for approximately 4 seconds, as the engine management system runs a series of self-diagnostics.

If the engine lamp comes on at any other time, see a Harley-Davidson dealer.

Low Fuel Lamp

See Check Engine and Low Fuel Lamp: VRSC Models. There is a low fuel warning lamp within the instrument cluster. The low fuel lamp lights up to indicate that there is approximately 1 gallon (3.8 liters) of gasoline left in the tank. The low fuel lamp color is amber.

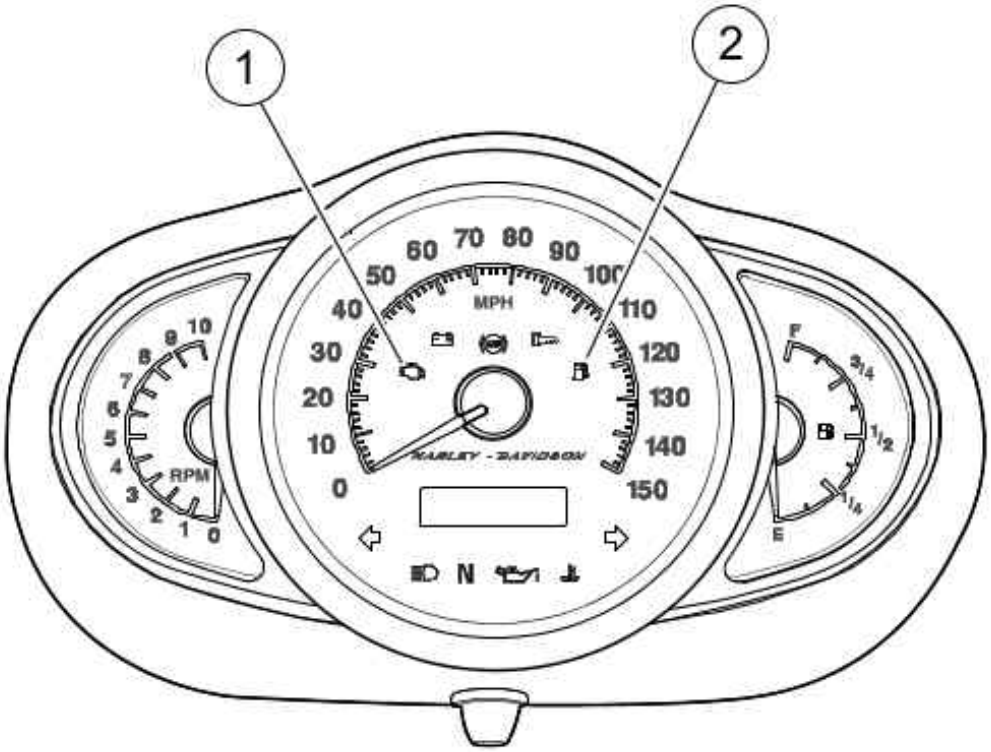

1. Check engine lamp
2. Low fuel lamp

Check Engine and Low Fuel Lamp: VRSC Models

Gear Shift Lever

CAUTION

The clutch must be fully disengaged before attempting a gear shift. Failure to fully disengage the clutch can result in equipment damage. (00182a)

See Gear Shift Lever (Downshift): VRSC Models. The gear shift lever is located on the left side of the motorcycle and is operated with the left foot. The transmission is a five speed sequential gear box.

1. Push the gear shift lever all the way down (full stroke) to shift the transmission to the next lower gear.

2. Lift the gear shift lever all the way up (full stroke) to shift the transmission to the next higher gear.

   NOTES:
   - *Release the gear shift lever after each gear change.*
   - *The lever must return to its central position before another gear change can be made.*

First gear is the last gear position that can be found by pushing the gear shift lever full stroke downward.

Neutral is located between first and second gear. The green neutral indicator lamp on the dash

will illuminate when the transmission is in neutral.

To shift from first gear to neutral, lift the gear shift lever 1/2 of its full stroke.

When the motorcycle is standing still and the engine is not running, shifting gears requires a different technique. Before shifting in this condition, move the motorcycle backward and forward with the clutch fully disengaged (clutch lever pulled in). While maintaining slight pressure on the shift lever, shift from one gear to another.

Even with the engine running and the motorcycle standing still, difficulty may be experienced in shifting gears. This difficulty occurs because transmission gears are not turning and shifting parts are not lined up to permit engagement.

CAUTION

When difficulty of shifting gears is experienced, do not under any circumstances, attempt to force the shift. The results of such abuse will be a damaged or broken shifter mechanism. (00161a)

See Shifting Gears for more information.

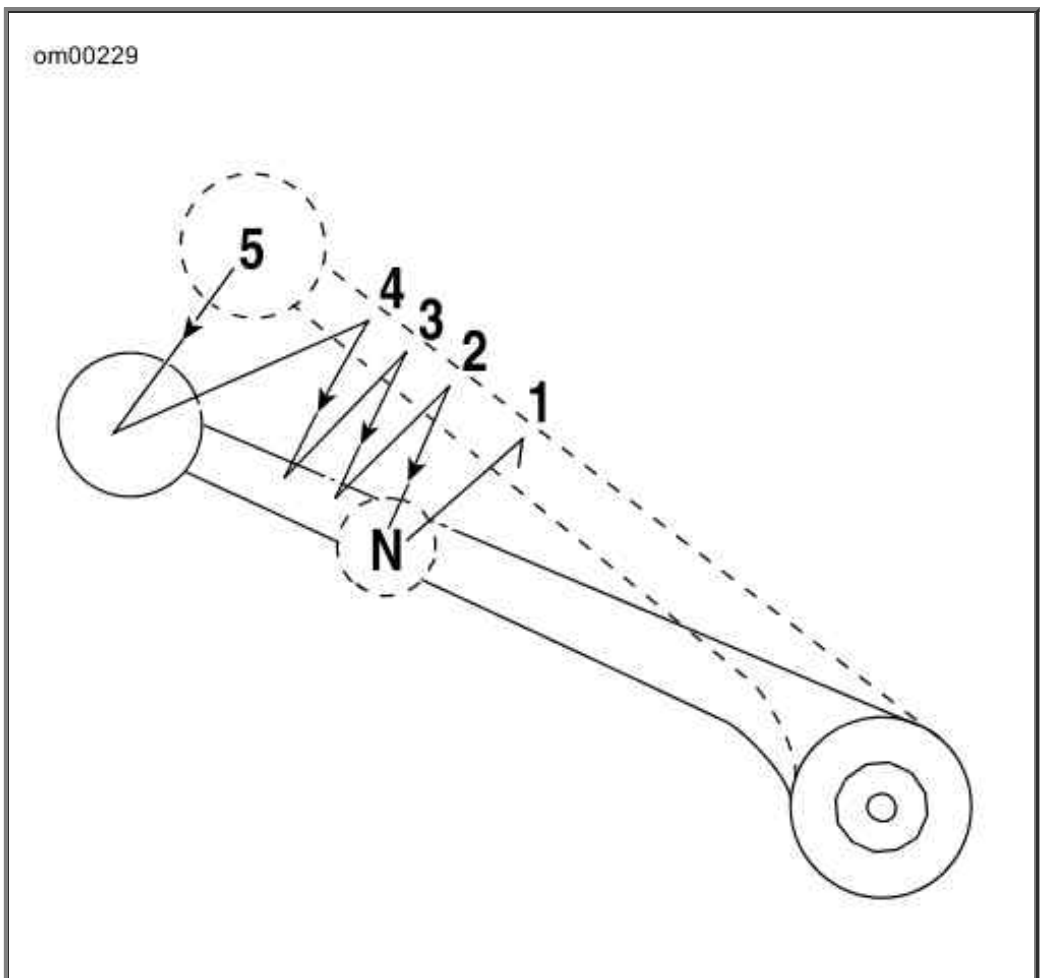

Gear Shift Lever (Downshift): VRSC Models

Brake System

General

The rear brake pedal controls the rear wheel brake and is located on the motorcycle's right side. Operate the rear brake pedal with the right foot.

The front brake hand lever controls the front wheel brake and is located on the right handlebar. Operate the hand lever with the fingers of the right hand.

⚠WARNING

Do not position fingers between hand control lever and handlebar grip. Improper hand positioning can impair control lever operation and cause loss of vehicle control, which could result in death or serious injury. (00032a)

Some models are equipped with an anti-lock braking system.

Non-ABS Brake System

Apply brakes uniformly and evenly to prevent wheels from locking. Use front and rear brakes equally for best results.

⚠WARNING

Do not apply brake strongly enough to lock the wheel. A locked wheel will skid and can cause loss of vehicle control, which could result in death or serious injury. (00053a)

Anti-lock Brake System (ABS)

Harley-Davidson's Anti-Lock Brake System assists the rider in maintaining control when braking in a straight-line emergency situation. ABS operates independently on front and rear brakes to keep the wheels rolling and prevent uncontrolled wheel lock-ups either on dry pavement or on slick surfaces such as gravel, leaves or when riding in wet conditions.

ABS: How It Works

The ABS monitors sensors at the front and rear wheels to determine wheel speed. If the system detects one or both wheels are slowing down too quickly, which indicates they are close to locking, or if the deceleration rate does not match a criteria stored in memory, the ABS reacts. The system rapidly opens and closes valves to modulate the brake caliper pressure utilizing only the brake lever/pedal pressure being applied by the rider. During ABS activation, the system provides the electronic equivalent of manually pumping the brakes and is capable of cycling up to seven times per second.

The rider will recognize ABS activation by the slight pulsing sensation in the hand lever or the rear brake pedal. The pulsing sensation may also be accompanied by a clicking sound from the ABS module. Both are the result of normal operation. Refer to ABS Symptoms and Conditions.

ABS: How To Use

While an advantage in emergency braking, ABS is not a substitute for safe riding. The safest way to stop a motorcycle is upright with both wheels straight.

Harley-Davidson ABS is a manual assist system. When in an emergency stopping situation, maintain pressure on the brakes through all ABS events. Do not modulate or "pump" the brake controls. The wheels won't lock until the end of the stop when motorcycle speed reaches approximately four miles per hour and ABS is no longer needed.

⚠WARNING

ABS cannot prevent lockup of rear wheel due to engine braking. ABS will not aid in cornering or on loose/uneven surfaces. A locked wheel will skid and can cause loss of vehicle control, which could result in death or serious injury. (00362a)

More information is available at www.harley-davidson.com/abs.

ABS: Tires and Wheels

ABS motorcycles must always use tires and wheels that are the same as the original equipment. The ABS monitors the rotational speed of the wheels through individual wheel speed sensors. Changing to different diameter wheels or different sized tires can alter the rotational speed. This can upset the calibration of the ABS and have an adverse effect on its ability to detect and prevent uncontrolled wheel lockups. Tire inflation pressure that is significantly low also can have an adverse effect.

ABS Symptoms and Conditions

SYMPTOM	CONDITION
Pulsing brake lever or pedal during an ABS event	Normal condition.
Clicking sound during an ABS event	Normal condition.
ABS lamp flashing	Normal condition - key turned to IGNITION - speed under 3 mph 5 km/h .
Perceived "surge" while braking	Normal condition - most noticeable when braking with one brake (front only or rear only). Result of a reduction in deceleration which can be caused by cracks or bumps in road, engine braking (high engine RPMs causing the rear wheel to slow down), hard braking at slow speeds, and other conditions. This is due to ABS modulating caliper brake pressure to prevent uncontrolled wheel lock.
Temporarily stiff rear	Normal condition - engine braking (high engine RPMs causing the rear wheel to slow down) or down shifting can activate ABS. If applying the rear brake at the

brake pedal	same time or immediately after, the ABS may be closing a valve to prevent pressure to the rear brake. This is due to ABS modulating caliper brake pressure to prevent uncontrolled wheel lock.
Tire chirp	Normal condition - depending on surface, tire can chirp without locking the wheel.
Black mark on pavement	Normal condition - depending on surface, tire can leave a black mark without locking the wheel.
Wheel lock at low speed	Normal condition - ABS will not activate on front wheel below 3 mph 5 km/h or on rear wheel below 5 mph 8 km/h .

Jiffy Stand

⚠WARNING

Always park motorcycle on a level, firm surface. An unbalanced motorcycle can fall over, which could result in death or serious injury. (00039a)

The jiffy stand is located on the left side of the motorcycle and swings outward to support the motorcycle for parking.

⚠WARNING

The jiffy stand locks when placed in the full forward (down) position with vehicle weight on it. If the jiffy stand is not in the full forward (down) position with vehicle weight on it, the vehicle can fall over which could result in death or serious injury. (00006a)

⚠WARNING

Be sure jiffy stand is fully retracted before riding. If jiffy stand is not fully retracted, it can contact the road surface causing a loss of vehicle control, which could result in death or serious injury. (00007a)

Rear View Mirrors

⚠WARNING

Objects in mirrors are closer than they appear. Use caution when judging distance of objects in mirrors. Failure to judge correct distances could result in death or serious injury. (00033a)

Your vehicle is equipped with two convex rear view mirrors.

This type of mirror is designed to give a much wider view to the rear than a flat mirror. However, cars and other objects seen in this type of mirror will look smaller and farther away than they actually are.

- Use caution when judging the size or relative distance of objects seen in rear view mirrors.
- Always adjust the rear view mirrors to clearly reflect the area behind the motorcycle before riding.

NOTE:

Adjust mirrors so you can see a small portion of your shoulders in each mirror. This will help you establish the relative distance of vehicles to the rear of your motorcycle.

Fuel Filler Cap: VRSC Models

See Fuel Filler Cap: VRSC Models. The fuel filler cap is located under the seat.

To open, turn the fuel filler cap counterclockwise and lift up. To close, turn the fuel filler cap clockwise until it clicks. The ratchet action of the cap prevents overtightening.

NOTE:

The fuel filler cap turns approximately 3/4 turn before it begins unscrewing.

See SAFE OPERATING RULES section and review safety procedures.

CAUTION

Do not spill fuel onto the motorcycle while refueling. Immediately wipe up fuel spills on your motorcycle. Fuel can cause damage to cosmetic surfaces. (00147b)

CAUTION

Use only unleaded fuel in catalytic converter-equipped motorcycles. Using leaded fuel will damage the emission control system. (00150b)

⚠WARNING

Do not store motorcycle with gasoline in tank within the home or garage where open flames, pilot lights, sparks or electric motors are present. Gasoline is extremely flammable and highly explosive, which could result in death or serious injury. (00003a)

⚠WARNING

Avoid spills. Slowly remove filler cap. Do not fill above bottom of filler neck insert, leaving air space for fuel expansion. Secure filler cap after refueling. Gasoline is extremely flammable and highly explosive, which could

result in death or serious injury. (00028a)

Fuel Filler Cap: VRSC Models

Fork Lock: VRSC Models

CAUTION

Protect your vehicle against theft. After parking your motorcycle, lock the steering head and ignition switch. Failure to lock your motorcycle can result in theft and/or equipment damage. (00491c)

See Fork Lock: VRSC Models. VRSC models have the fork lock incorporated in the steering head on the right hand side.

⚠WARNING

Do not operate vehicle with forks locked. Locking the forks restricts the vehicle's turning ability, which could result in death or serious injury. (00035a)

Using the fork lock immediately after parking your motorcycle will discourage unauthorized use or theft when parking your motorcycle.

1. Turn the fork to the full left position.
2. Insert the ignition key into the fork lock.

3. Push down on the fork lock switch and turn to the full clockwise position.
4. Remove the ignition key.

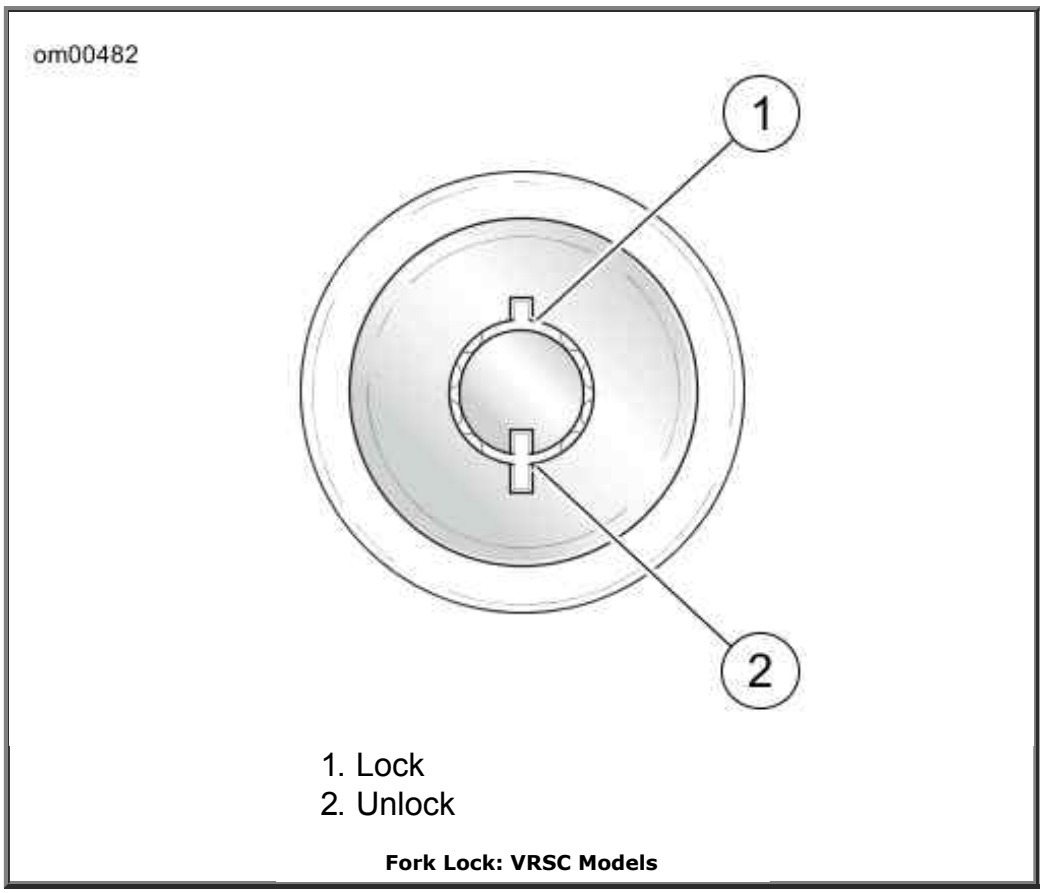

Fork Lock: VRSC Models

Rear Shock Absorbers: VRSC Models

General

See Adjusting Rear Shock: VRSC Models. The rear shock absorber spring preload can be adjusted for the weight the motorcycle is to carry and has five preload graduations. Notice the adjustment settings as you turn the collar.

Adjustment

⚠WARNING

Be sure both shock absorbers are adjusted to same preload position. Improper adjustment can adversely affect stability and handling, which could result in death or serious injury. (00036a)

The average weight solo rider might use the extended spring preload position (adjustment setting 1 or 2).

1. Place the shock absorber adjustment tool around the lower collar of the shock absorber.
2. Turn the collar clockwise (toward higher numbers) to increase the preload or pressure.

Use the adjustment setting numbers as a reference for equal adjustment of shock absorbers on both the right and left side of the motorcycle. A heavy solo rider might require additional preload or pressure (adjustment setting 3).

CAUTION

Do not turn the shock absorber adjustment collar counterclockwise beyond adjustment setting 1. Doing so may result in equipment damage. (00166a)

Adding a passenger may require maximum preload (adjustment setting 5).

Turn the collar counterclockwise to decrease the preload or pressure.

See Adjusting Rear Shock: VRSC Models. To adjust the rear shock absorber spring preload, turn the spring adjusting cam to the desired position with a spanner wrench. When returning to off-cam position, cams should be backed off in opposite direction. A SPANNER WRENCH 94700-52C is available from your Harley-Davidson dealer.

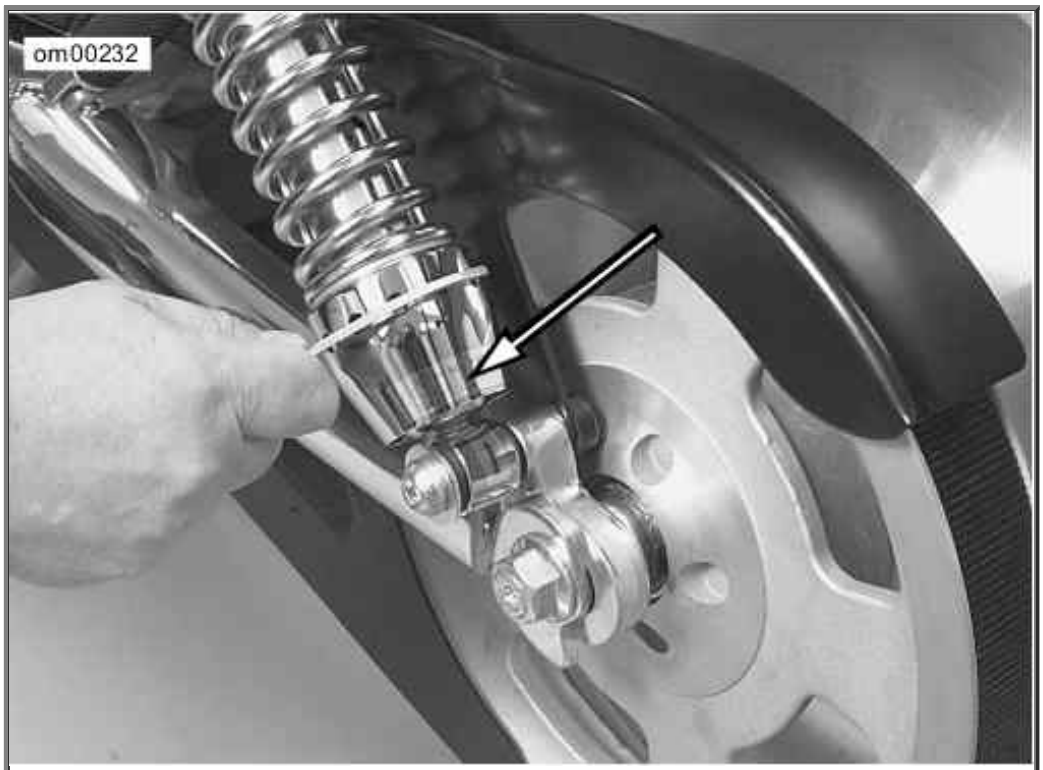

Adjusting Rear Shock: VRSC Models

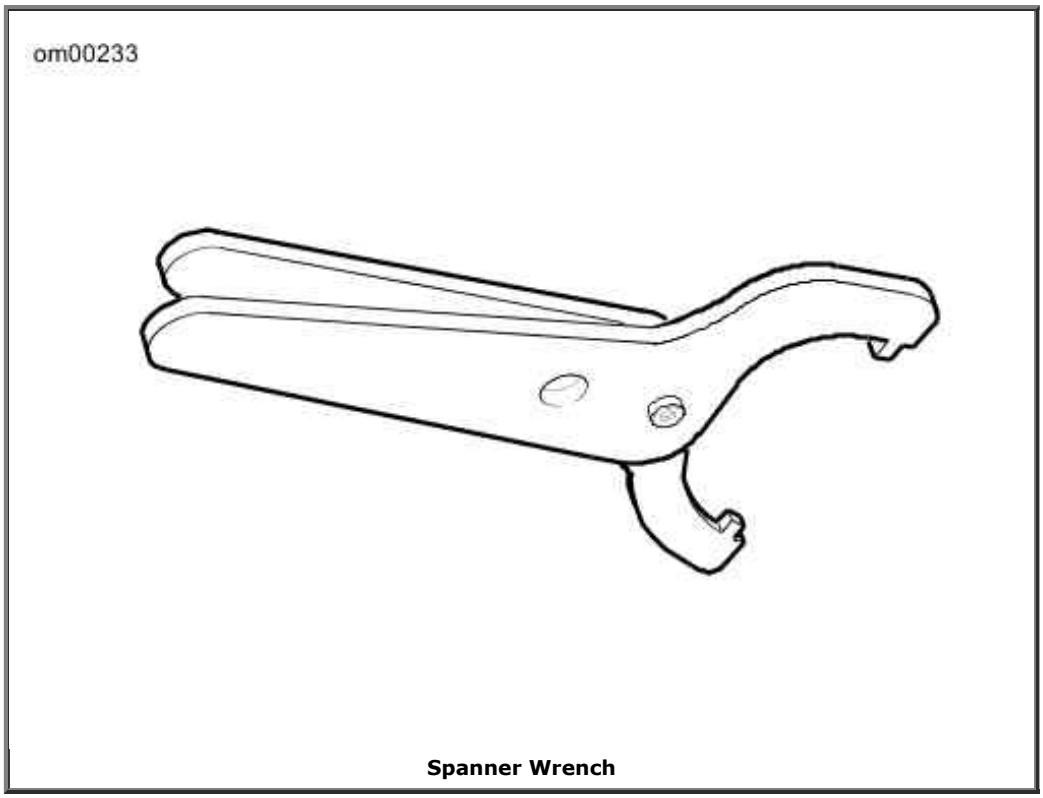

Spanner Wrench

Harley-Davidson Smart Security System

Harley-Davidson Smart Security System

Components

See Security Module w/Antenna. The Harley-Davidson Smart Security System (H-DSSS) consists of a Hands-Free Security Module (HFSM) (1) and a Hands-Free Antenna (2) mounted on the motorcycle, and a Hands-Free Fob **carried** by the rider/passenger.

After parking the motorcycle, turn the ignition key to OFF and the Smart Security System will automatically **arm** within five seconds. While armed, the starter and ignition are disabled and the rider may leave the motorcycle knowing that the module will activate an alarm if someone tampers with the ignition or attempts to move the motorcycle.

If the fob is present, the module will automatically **disarm** when the ignition key is turned to IGNITION or ACCESS.

NOTE:

Do not relocate the module or the antenna on the motorcycle.

Options

Several options are available for the Harley-Davidson Smart Security System from the Harley-Davidson Genuine Motor Accessories and Motor Parts catalog. Options include:

- Smart Siren and Smart Siren II.
- Security Pager and Security Pager Receiver II.

- Replacement Fobs.

See a Harley-Davidson dealer for details.

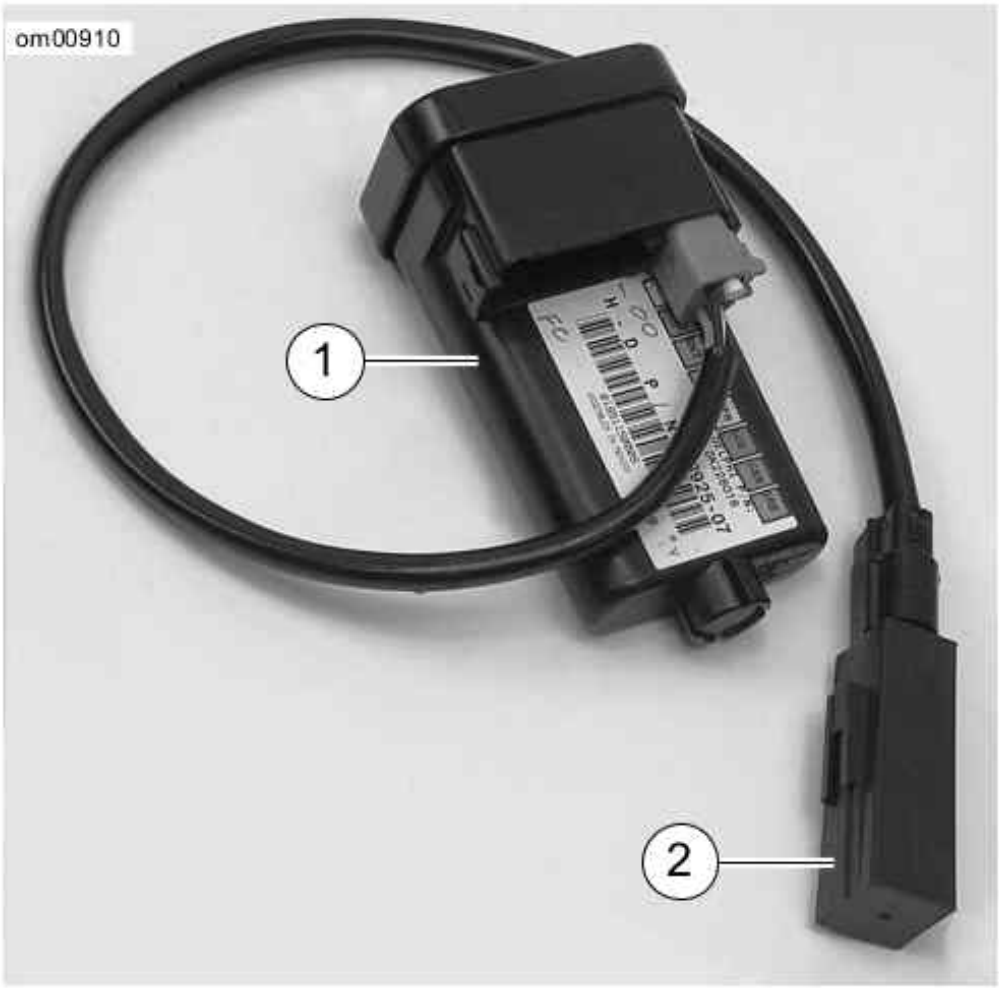

1. Hands-Free Security Module
2. Hands-Free Antenna

Security Module w/Antenna

FCC Regulations

FCC ID: L2C0027TR IC ID: 3432A-0027TR

FCC ID: L2C0028TR IC ID: 3432A-0028TR

This device complies with Part 15 of the FCC Rules and with RSS-210 of Industry Canada rules. Operation is subject to the following two conditions:

(1) This device may not cause harmful interference, and (2) This device must accept any interference received, including interference that may cause undesired operation.

WARNING: Changes or modifications not expressively approved by the party responsible for compliance could void the user's authority to operate the equipment.

The term "IC:" before the radio certification number only signifies that Industry Canada technical specifications were met.

Hands-Free Fob

Fob Assignment

See Hands-Free Fob: Smart Security System. Hands-Free Fobs are electronically assigned to the Harley-Davidson Smart Security System by a Harley-Davidson dealer so that the module can recognize a fob's unique signal. Only two fobs can be assigned to the module at any one time.

Replacement fobs can be purchased from a dealership but can only be assigned to the motorcycle by a trained Harley-Davidson technician.

NOTES:

- *The reusable label found on the fob packaging lists the serial number of the fob. For reference, fix the label to a blank "NOTES" page in the Owner's Manual.*
- *The serial number of the fob is also found on the inside of the fob. See Fob Battery.*
- *The module will arm only if the fob has been assigned by a Harley-Davidson dealer and a Personal Identification Number (PIN) has been entered in the system. The PIN should be recorded on the Personal Information page in the front of this Owner's Manual and on the removable wallet card.*
- *Should the rider misplace the fob or if the fob fails, the rider can refer to the wallet card and use the PIN to manually disarm the system. Refer to Arming and Disarming and Troubleshooting.*
- *The PIN can easily be changed by the rider at any time. Refer to Personal Identification Number (PIN).*

Hands-Free Fob: Smart Security System

Riding with a Fob

- Always carry the fob when riding, loading, fueling, moving, parking or servicing the motorcycle. Carry the fob in a convenient pocket.
- Do not leave the fob attached to the handlebars or store the fob in a saddlebag or Tour-Pak®. Unintentionally leaving the fob with the motorcycle when it's parked prevents the system from activating the alarm.
- Do not ride with the fob stored in a metal case or with the fob closer than 3.0 in. 76 mm to a cell phone, PDA, display or other electronic device. Any electromagnetic interference may prevent the fob from disarming the system.
- For added security, always lock the fork and remove the ignition key when parked. If the fob is within range and the motorcycle is unlocked, tampering with the motorcycle will not activate the alarm.

Personal Identification Number (PIN)

The Personal Identification Number (PIN) is a number that can be used to disarm the Harley-Davidson Smart Security System in case an assigned fob is misplaced, fails or if the fob and module cannot communicate because of electromagnetic interference.

A PIN is a five-digit number (1-9, no zeros).

Changing the PIN

To maintain security, the rider can change the PIN at any time. Refer to Changing the PIN.

Changing the PIN

STEP NO.	ACTION	WAIT FOR CONFIRMATION	NOTES
1	Select a 5-digit (1 thru 9) PIN and record on the wallet card from Owner's Manual.		
2	With an assigned fob present, turn **IGN** key **IGNITION**-OFF-**IGNITION**-OFF-**IGNITION.**		
3	Press **left** turn signal switch **3 times**.		
4	Press **right** turn signal switch **1 time** and release.	Turn signals will flash 3 times. Current PIN will appear in odometer. The first digit will be flashing.	See figure showing the odometer window with PIN display.
5	Enter first digit (a) of new PIN by pressing **left** turn signal switch **a** times.		
6	Press **right** turn signal switch **1 time** and release.	The new digit (a) will replace the current in odometer window.	
7	Enter second digit (b) of new PIN by pressing **left** turn signal switch **b** times.		
8	Press **right** turn signal switch	The new digit (b) will replace the	

	1 time and release.	current in odometer window.	
9	Enter third digit (c) of new PIN by pressing **left** turn signal switch **c** times.		
10	Press **right** turn switch **1 time** and release.	The new digit (c) will replace the current in odometer window.	
11	Enter fourth digit (d) of new PIN by pressing **left** turn signal switch **d** times.		
12	Press **right** turn switch **1 time** and release.	The new digit (d) will replace the current in odometer window.	
13	Enter fifth digit (e) of new PIN by pressing **left** turn signal switch **e** times.		
14	Press **right** turn switch **1 time** and release.	The new digit (e) will replace the current in odometer window.	
15	Before the module rearms, turn the ignition key to **OFF**.	The odometer will return to mileage.	Turning the ignition key to **OFF** stores the new PIN in the module.

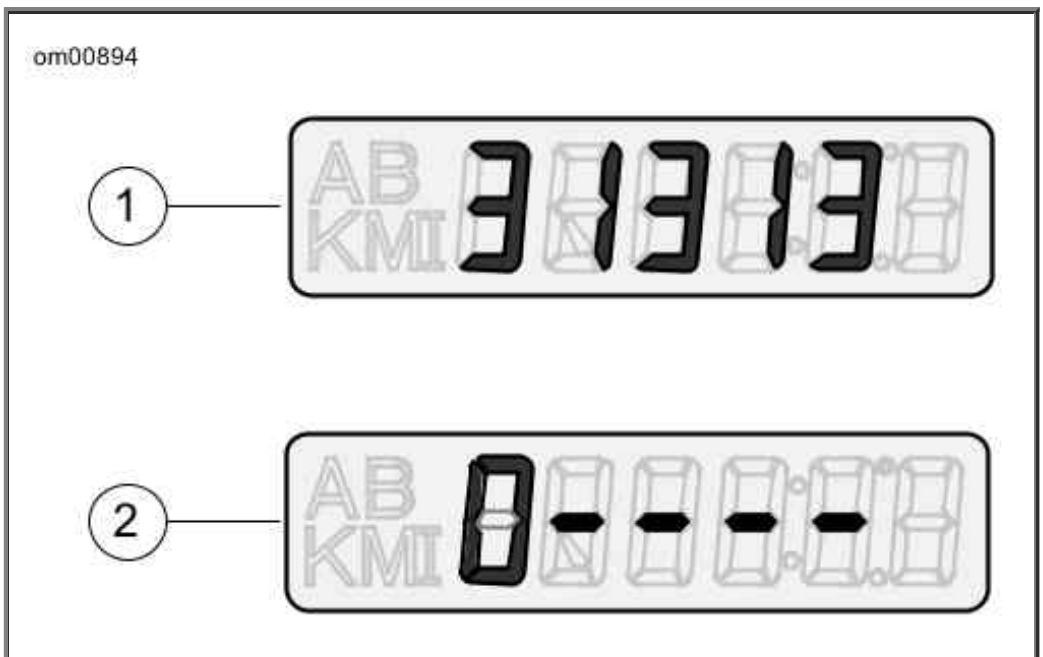

1. Current PIN (example) on PIN Change
2. PIN Disarm

Odometer Windows - PIN

Security Status Indicator

See Security Status Indicator: VRSC Models. The illuminated key icon in the speedometer face indicates the status of the Harley-Davidson Smart Security System.

- **Armed:** A key icon that blinks approximately every 3 seconds indicates that the system is armed.
- **Disarmed:** After the ignition/headlamp switch is turned to IGNITION and the system disarms, the key icon will remain illuminated for approximately four seconds and then turn off.
- **Service:** A key icon that remains illuminated longer than four seconds indicates that service of the module is required.

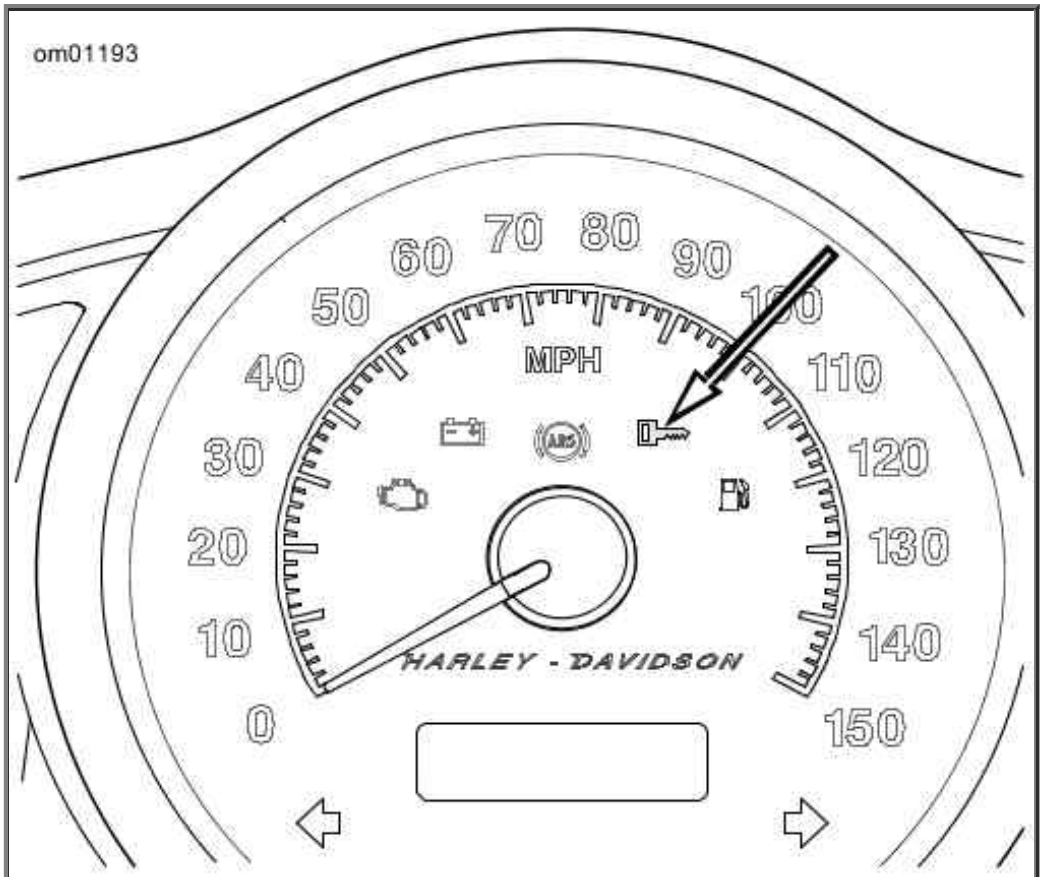

Security Status Indicator: VRSC Models

Arming and Disarming

Arming

When the motorcycle is parked and the ignition key is turned to OFF, the Harley-Davidson Smart Security System arms automatically within five seconds if no motion is detected. Even when the fob is present, the system will arm.

On arming, the turn signals will flash twice and the optional siren will chirp twice. While armed, the key icon in the speedometer face will flash every three seconds.

NOTE:

International Models: *The HFSM must be in the Chirp Mode for the siren to chirp on arming or on disarming. See Siren Chirp Mode (Confirmation).*

Disarming

Once disarmed, the rider may ride or move the motorcycle for parking, storage or service without

setting off the alarm.

Fob: An armed Smart Security System is automatically disarmed when the ignition key is turned to IGNITION with the fob present.

When the module disarms, the optional siren will chirp once and the key icon will illuminate for a solid four seconds and then turn off.

NOTE:

Any motion, like lifting the motorcycle up off of its jiffy stand, or turning the ignition key to IGNITION and the module will electronically "poll" for the presence of the fob. If the fob is present, the system disarms.

Personal Identification Number (PIN): If the fob is misplaced or if the present fob fails to communicate with the module, the system can be disarmed with the Personal Identification Number (PIN).

Disarming with a PIN

Do not turn handlebars, straddle seat or lift motorcycle off the jiffy stand. During a PIN disarm, if the Smart Security System detects motorcycle motion the system will activate the alarm.

Entering a PIN to Disarm Harley-Davidson Smart Security System

STEP NO.	ACTION	WAIT FOR CONFIRMATION	NOTES
1	If necessary, verify the current 5-digit PIN.		Should be recorded on wallet card.
2	Turn ignition key to **IGNITION**.		
3	Quickly (within 2 seconds of turning ignition key) hold **both** turn signal switches in until confirmation.	Key icon flashes at fast rate. In the odometer window, a flashing dash will be followed by four more dashes.	See figure showing the odometer window with PIN display. Five dashes will appear in the odometer window.
4	Enter first digit (**a**) in the PIN by pressing **left** turn switch **a times.**	The first digit (**a**) in the odometer will be the first digit in the PIN.	
5	Press **right** turn switch **1 time.**	The first digit is stored and the dash will flash.	Serves as enter key.
6	Enter second digit (**b**) in the PIN by pressing **left** turn switch **b times.**	The second digit (**b**) in the odometer will be the second digit in the PIN.	
7	Press **right** turn switch **1 time.**	The second digit is stored and the next dash will flash.	Serves as enter key.
8	Enter third digit (**c**) in the PIN by pressing **left** turn switch **c times.**	The third digit (**c**) in the odometer will be the third digit in the PIN.	
9	Press **right** turn switch **1**	The third digit is stored and	Serves as enter key.

	time.	the next dash will flash.	
10	Enter fourth digit (**d**) in the PIN by pressing **left** turn switch **d times**.	The fourth digit (**d**) in the odometer will be the fourth digit in the PIN.	
11	Press **right** turn switch **1 time.**	The fourth digit is stored and the next dash will flash.	Serves as enter key.
12	Enter fifth digit (**e**) in the PIN by pressing **left** turn switch **e times.**	The fifth digit (**e**) in the odometer will be the fifth digit in the PIN.	
13	Press **right** turn switch **1 time**.	The fifth digit is stored. The key icon stops blinking.	Smart Security System is disarmed.

NOTES:

- *At any time during a PIN disarm, if the fob is brought within range of the motorcycle, the Smart Security System will disarm when the module receives the coded signal from the fob.*
- *If a mistake is made while entering PIN, wait two minutes before another disarming attempt.*
- *The Smart Security System will remain disarmed until the ignition key is turned to OFF.*

Arming with Hazard Warning 4-Way Flashers On

If it should be necessary to leave a motorcycle parked along side a roadway, the hazard warning four-way flashers can be turned ON and the Smart Security System armed.

1. Turn ignition key to ACCESS.
2. Simultaneously press both left and right turn signal switches to turn the four-way flashers ON.
3. Turn the ignition key to OFF to arm the Smart Security System.

To turn hazard warning flashers OFF, turn the ignition key to IGNITION and simultaneously press the left and right turn signal switches.

Alarm

Warnings

Once armed, if the motorcycle is moved or lifted up off of its jiffy stand or if the ignition key is turned to IGNITION and the fob is not present, the alarm will warn the operator with three alternate flashes of the turn signals and a chirp of the optional siren.

Within four seconds, if the motorcycle is back on its jiffy stand and no further motion is detected and/or the ignition key is turned to OFF, the module will remain armed without activating the alarm.

If the motorcycle motion continues or the ignition key is not turned back to OFF, the module will issue a second warning four seconds after the first.

NOTE:

During warnings and alarms, the starter motor and the ignition circuits are disabled.

The Alarm

If the Smart Security System is still detecting motion and/or if the ignition key has not been turned back to OFF after a second warning, the system will activate the alarm.

When activated, the Smart Security System will:

- Alternately flash the four turn signals.
- See Optional Smart Siren. Sound the optional siren.

Duration: The alarm will stop within 30 seconds and if no motion is detected, the alarm will not restart.

However, if motorcycle motion continues the system will repeat the 30 second alarm and recheck for motion. The alarm will repeat this 30 second alarm cycle for five minutes (10 cycles) or until the alarm is deactivated.

NOTE:

The alarm will also activate the LED, vibration or audible modes of a Harley-Davidson Security Pager. A pager can operate either in silent or in combination with an optional Smart Siren. The range of a pager can be up to 0.5 mile (0.8 km). See a Harley-Davidson dealer for details.

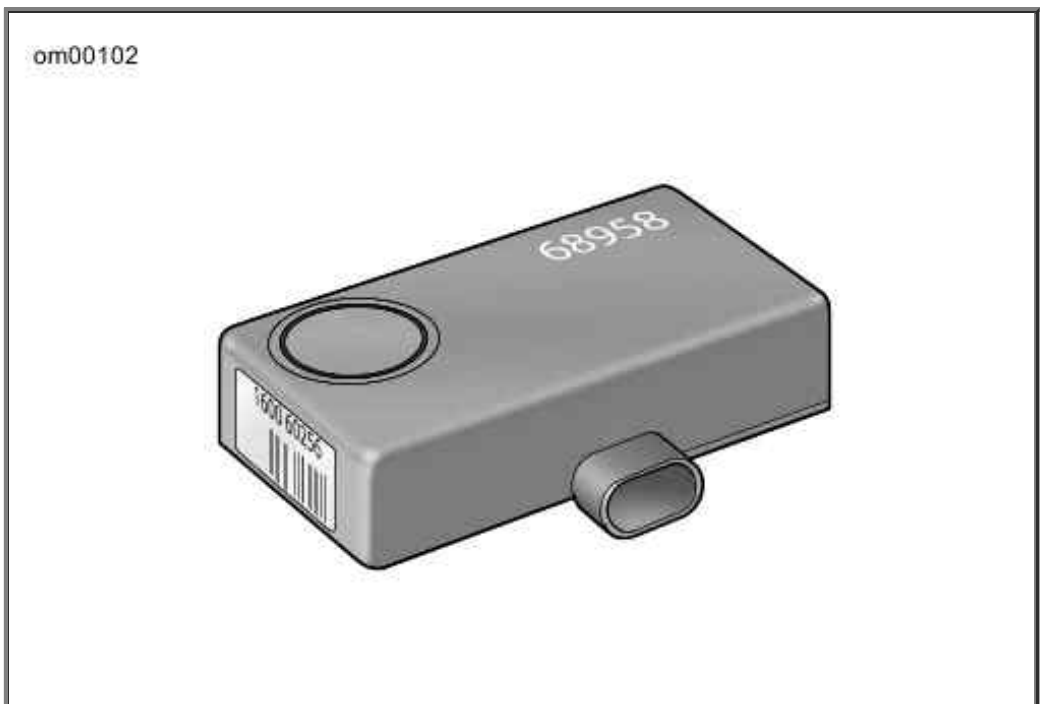

Optional Smart Siren

Deactivate the Alarm

Key Fob: Bring the fob to the motorcycle. After the module identifies that the fob is present, the system will terminate the alarm.

Siren Chirp Mode (Confirmation)

Chirpless Mode

In the chirpless mode, the siren does not chirp on arming or disarming.

NOTE:

Even when armed in the chirpless mode, the siren still chirps warnings on movement and will activate the alarm through cycles.

Chirp Mode

On arming in the chirp mode, the siren responds with two chirps. When disarming, the siren responds with a single chirp.

Switching Modes

Cycling quickly through two armings and disarmings will switch the system from either the chirpless mode or the chirp mode to its opposite.

1. With the fob present, the Ignition Switch to IGNITION and the system disarmed, turn the Ignition Switch OFF.
2. When the system arms (2 flashes of turn signals), immediately turn the Ignition Switch to IGNITION.
3. Wait until the security lamp goes out, then immediately turn the Ignition Switch OFF.
4. When the system arms (2 flashes of turn signals), immediately turn the Ignition Switch to IGNITION and wait for system to disarm.

Transport Mode

It is possible to arm the security system without enabling the motion detector for one ignition cycle. This allows the vehicle to be picked up and moved in an armed state, however, any attempt to start the engine will trigger the alarm.

To Enter Transport Mode:

1. Turn the Ignition Switch to IGNITION.
2. Set the Engine Stop Switch to OFF.
3. With an assigned fob within range, turn the Ignition Switch from IGNITION to ACC, or OFF to ACC, depending on switch sequence.
4. Simultaneously press both the left and the right turn signal switches. This must be done within five seconds of turning the Ignition Switch to ACC.
5. After the turn signals flash once, turn the Ignition Switch to OFF and the module is armed.

To Exit Transport Mode:

Return the system to normal operation:

1. With the fob present, turn the Ignition Switch to IGNITION to disarm the HFSM. To cancel the transport mode, set the Engine Stop Switch to RUN.

Storage and Service Departments

Long Term Parking

To maintain arming, store the fob beyond the range of the module. If the motorcycle is to be moved while parked, have the fob present.

If the motorcycle will not be operated for several months, such as during the winter season, follow the Owner's Manual instructions for storage. Refer to Motorcycle Storage: VRSC Models.

Service Departments

When the motorcycle is to be left at a Harley-Davidson dealer, there are two options:

1. Leave an assigned fob with the dealer.
2. To maintain possession of the fob, ask the dealer to disable the module for service (service mode) before leaving the dealership.

Fob Battery

Replacing the Battery

Replace the key fob battery every year.

1. See Hands-Free Fob Battery. Slowly turn a thin blade in the thumbnail slot (1) on the side of the fob to separate the two halves.
2. Remove the battery (2) and discard.

   NOTE:

   Dispose of the old battery in accordance with local regulations.

3. Install a **new** battery (Panasonic 2032 or equivalent) with the positive (+) side down.
4. Align the two halves of the fob and snap together.

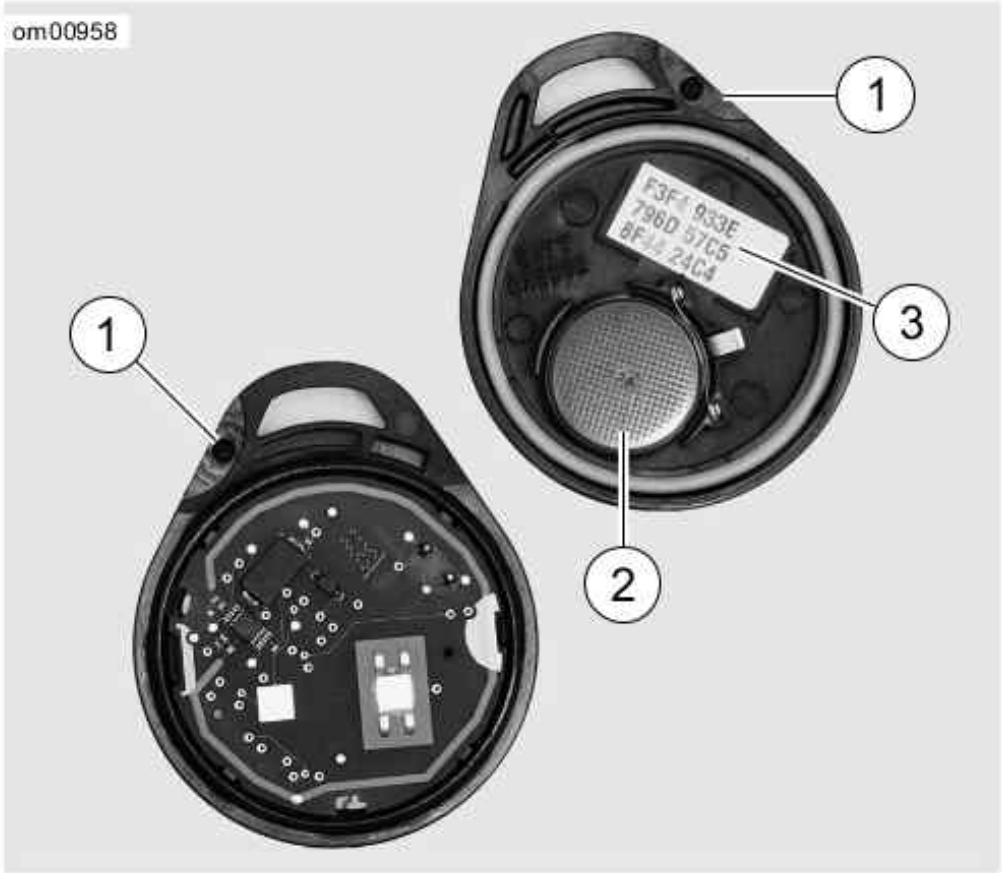

1. Thumbnail slot
2. Battery
3. Fob serial number

Hands-Free Fob Battery

Power Disconnects

Optional Siren

On a power disconnect, to prevent the module from actuating the optional siren:

1. Verify that the fob is present.
2. Turn the ignition key to IGNITION.
3. Pull the maxi-fuse from its holder or disconnect the battery.

Troubleshooting

Key Icon

If the system key icon stays illuminated while riding, see a Harley-Davidson dealer.

Fob

With the fob present, if the Smart Security System continues to actuate warnings and alarms, one

of the following can be the cause:

1. **Electromagnetic Interference:** Other electronic devices, power lines, or other electromagnetic sources can cause the Smart Security System to operate inconsistently.

    a. Verify that the fob is not in a metal enclosure or within 3.0 in. 76 mm of any other electronic devices.

    b. Place the fob on the seat and turn the ignition key to IGNITION. After the module disarms, return the fob to a convenient location.

    c. Move motorcycle at least 15 feet 5 m from the spot of interference.

2. **Discharged Fob Battery:** Use the PIN to disarm the module. Replace the battery. Refer to Fob Battery.

3. **A Damaged Fob:** Use the PIN to disarm the motorcycle. Replacement fobs are available for purchase from a Harley-Davidson dealer.

Siren

- If the siren does not chirp two or three times on a valid arming command from the security module, the siren is either in the Chirpless Mode, not connected, not working, or the siren wiring was opened or shorted while the siren was disarmed.
- If the siren is armed and the internal siren battery is dead, shorted, disconnected, or has been charging for a period longer than 24 hours, the siren will respond with three chirps on arming instead of two.
- The internal siren battery may not charge if the vehicle's battery is less than 12.5 volts.
- If the siren enters the self-driven mode where it is powered from the siren's internal 9 volt battery, the turn signal lamps may or may not alternately flash. If the security module activates the siren, the turn signal lamps will alternately flash. If the siren has been armed and a security event occurs, and the siren is in self-driven mode, the siren will alarm for 20 to 30 seconds and then turn off for 5 to 10 seconds. This alarm cycle will be repeated ten times if the siren is in the self-driven mode.

Operation

Operating Recommendations: VRSC Models

⚠WARNING

Motorcycles are different from other vehicles. They operate, steer, handle and brake differently. Unskilled or improper use could result in loss of control, death or serious injury. (00556c)

- Take a rider training course.
- Read Owner's Manual before riding, adding accessories or servicing.
- Wear a helmet, eye protection and protective clothing.
- Never tow a trailer.

CAUTION

Do not run the engine at extremely high RPM with clutch disengaged or transmission in neutral. Running an engine at high RPM can result in engine damage. (00177a)

- The maximum recommended safe engine speed is 9000 RPM.
- Do not idle engine unnecessarily for more than a few minutes with motorcycle standing still.

CAUTION

Do not exceed the maximum safe RPM specified below under any conditions. Exceeding the maximum safe engine RPM can result in equipment damage. (00248a)

NOTE:

The maximum recommended engine speed for VRSC model motorcycles is 9000 RPM.

If motorcycle will not be ridden for a period of three weeks or more with security system armed, it is recommended to connect a Battery Tender to maintain battery charge. If security system will not be armed, it is recommended that the 40 Amp maxi-fuse be removed. See Electrical Protection: VRSC Models.

CAUTION

Use ONLY Genuine Harley-Davidson Extended Life Antifreeze and Coolant. Use of other coolants/mixtures may lead to engine damage. (00179a)

Have the engine checked regularly and keep it well tuned. This applies particularly to a motorcycle equipped with windshield and fairing.

⚠WARNING

When riding on wet roads, brake efficiency and traction are greatly reduced. Failure to use care when braking, accelerating or turning on wet roads can cause loss of control, which could result in death or serious injury. (00041a)

NOTES:

- *While the motorcycle is operating, electronically controlled cooling fans will turn on periodically. This is normal operation.*
- *When descending upon a long, steep grade, downshift and use engine compression together with intermittent application of both brakes to slow the motorcycle.*

⚠WARNING

Continuous use of brake causes overheating and reduced efficiency, which could result in death or serious injury.

(00042a)

CAUTION

Do not coast for long distances with the engine off. The transmission is properly lubricated only when the engine is running. Coasting long distances can result in transmission damage. (00180a)

⚠WARNING

Do not tow a disabled motorcycle. Towing can adversely affect stability and handling, which could result in death or serious injury. (00017a)

CAUTION

Using the clutch to slow the motorcycle when it is turned off and rolling backwards can damage the power train. (00562b)

Break-in Riding Rules: VRSC Models

The First 500 Miles (800 Kilometers)

The sound design, quality materials, and workmanship that are built into your new Harley-Davidson will give you optimum performance right from the start.

To allow your engine to wear in its critical parts, we recommend that you observe the riding rules provided below for the first 500 miles (800 kilometers). Adherence to these suggestions will help to assure good future durability and performance.

1. During the first 50 miles (80 kilometers) of riding, keep the engine speed below 5000 RPM in any gear. Do not lug the engine by running or accelerating at very low RPM, or by running at high RPM longer than needed for shifting or passing.
2. Up to 500 miles (800 kilometers), vary the engine speed and avoid operating at any steady engine speed for long periods. Engine speed up to 7000 RPM in any gear is permissible.
3. Drive slowly and avoid fast starts at wide open throttle until the engine has warmed up.
4. Avoid lugging the engine by not running the engine at very low speeds in higher gears.
5. Avoid hard braking. New brakes need to be broken-in by moderate use for the first 200 miles (300 kilometers).

Pre-Riding Checklist: VRSC Models

⚠WARNING

Read the CONTROLS AND INDICATORS section before riding your motorcycle. Failure to understand the operation of the motorcycle could result in death or serious injury. (00043a)

Before riding your motorcycle at any time, make a general inspection to be sure it is in safe riding condition.

1. Check the amount of fuel in the tank and add fuel if required.

⚠WARNING

Avoid spills. Slowly remove filler cap. Do not fill above bottom of filler neck insert, leaving air space for fuel expansion. Secure filler cap after refueling. Gasoline is extremely flammable and highly explosive, which could result in death or serious injury. (00028a)

⚠WARNING

Use care when refueling. Pressurized air in fuel tank can force gasoline to escape through filler tube. Gasoline is extremely flammable and highly explosive, which could result in death or serious injury. (00029a)

⚠WARNING

Stop the engine when refueling or servicing the fuel system. Do not smoke or allow open flame or sparks near gasoline. Gasoline is extremely flammable and highly explosive, which could result in death or serious injury. (00002a)

CAUTION

Do not spill fuel onto the motorcycle while refueling. Immediately wipe up fuel spills on your motorcycle. Fuel can cause damage to cosmetic surfaces. (00147b)

2. Adjust mirrors to proper riding positions.
3. Check the oil level. See Checking Oil Level: VRSC Models.
4. Check the coolant level. See Coolant Level.
5. Check the controls to be sure they are operating properly. Operate the front and rear brakes, throttle, clutch and shifter.
6. Check steering for smoothness by turning the handlebars through the full operating range.

⚠WARNING

Be sure tires are properly inflated, balanced and have adequate tread. Inspect your tires regularly and see a Harley-Davidson dealer for replacements. Riding with excessively worn, unbalanced or under-inflated tires can adversely affect stability and handling, which could result in death or serious injury. (00014a)

7. Refer to Tire Pressures: 2008 VRSC Models. Check tire condition and pressure. Incorrect pressure will result in poor riding characteristics and can affect handling and stability. Adhere to tire specifications for correct inflation pressures to use.

⚠WARNING

Be sure headlamp, tail and stop lamp and turn signals are operating properly before riding. Poor visibility of rider to other motorists can result in death or serious injury. (00478b)

8. Check all electrical equipment and switches including the stop lamp, turn signals and horn, for proper operation.
9. Check for any fuel, oil or hydraulic fluid leaks.
10. Check rear belt adjustment.
11. Service your motorcycle as necessary.

Jiffy Stand Interlock: International Models

Some international models are equipped with a jiffy stand interlock feature.

If the rider attempts to start the engine or pushes the starter button while the transmission is in gear and the jiffy stand is down, then the jiffy stand interlock system will not permit the engine to run. The message "SidE StAnd" will scroll across the odometer to indicate this to the rider. Raising the jiffy stand (or putting the transmission in neutral) will permit the engine to run and clear the message.

If the jiffy stand falls out of the fully retracted position while riding at speeds greater than 10 mph 15 kph , then the jiffy stand interlock system will maintain engine operation and alert the rider about this by illuminating the indicators (flash twice) and scroll the message "SidE StAnd" across the odometer. The message will remain until the system detects the jiffy stand in the fully retracted position again. The rider may continue to operate the vehicle while in this mode.

The rider may clear the text messages at any time by pressing the function switch once while the vehicle is powered up.

NOTE:

If the operation of raising the jiffy stand and putting the transmission in gear is rapidly executed, the jiffy stand bouncing off the frame could cause the jiffy stand interlock system to activate and stop the engine.

General

CAUTION

The engine should be allowed to run slowly for 30-60 seconds. This will allow the engine to warm up and let oil reach all surfaces needing lubrication. Failure to comply can result in engine damage. (00181b)

Do not roll the throttle before starting. Rolling the throttle before starting the motorcycle is unnecessary.

Starting

⚠WARNING

Shift transmission to neutral before starting engine to prevent accidental movement, which could result in death or serious injury. (00044a)

1. Turn ignition/headlamp key switch to IGNITION position. Do not roll the throttle.

   NOTE:

   The engine lamp will light for approximately 4 seconds and you will hear the fuel pump purr for approximately 2 seconds as it operates to fill the fuel lines with gasoline.

2. See Right Handlebar Controls: VRSC Models. Turn the off/run switch to RUN position.

3. Squeeze the clutch lever in against the handgrip.

   NOTE:
   - *To activate the starting system, the clutch interlock circuitry requires the clutch be disengaged, clutch lever pulled in against left handgrip, and/or the transmission be shifted to the neutral position (green neutral lamp lit).*

4. Raise the jiffy stand (required on international models).

5. Press the starter button to start the motorcycle.

6. When the engine has started, you can operate your motorcycle as you normally would after raising the jiffy stand.

NOTES:

- *If the fuel tank becomes completely dry, it may take a few seconds longer to start the motorcycle after filling the tank. It will not be necessary to take any extraordinary measures before starting the motorcycle.*
- *The ABS indicator lamp will remain on until vehicle is moving approximately 3 mph 5 km/h .*

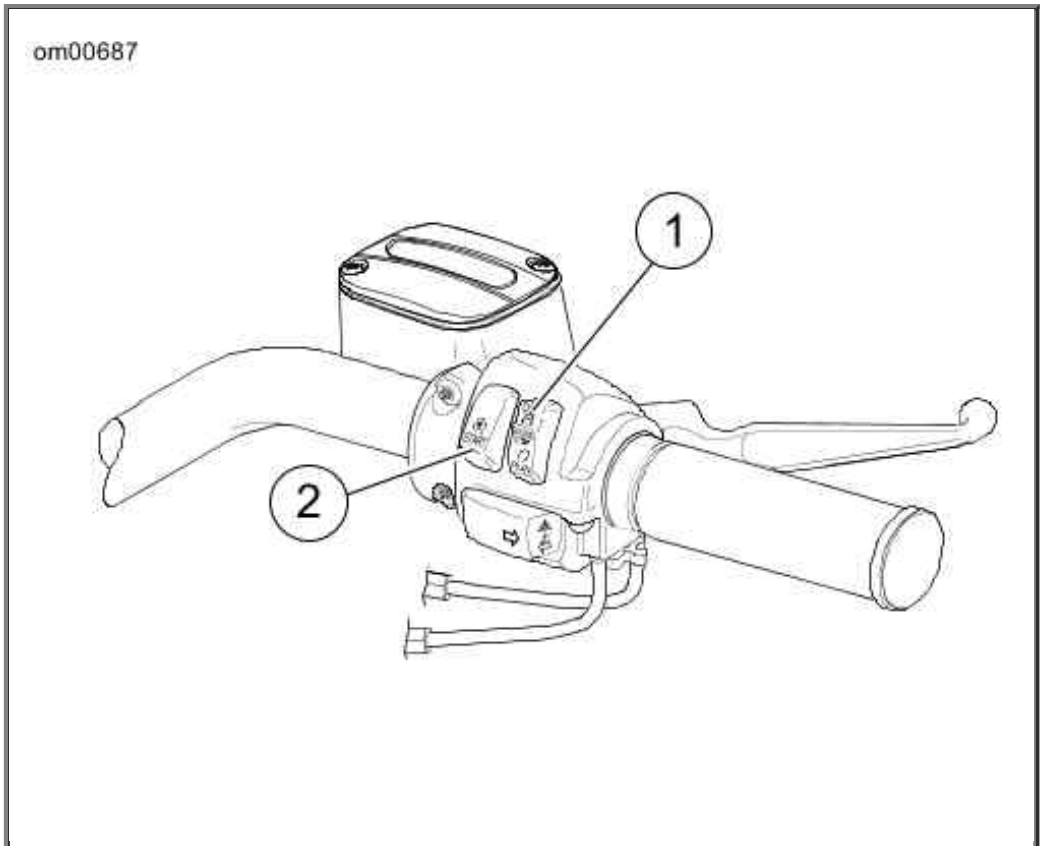

1. Engine off/run switch
2. Engine start switch

Right Handlebar Controls: VRSC Models

Stopping The Engine

1. Stop the engine by turning OFF the engine stop switch on the right handlebar.
2. Turn OFF the ignition/headlamp key switch. If the engine should be stalled or stopped in any way, turn off the ignition/headlamp key switch at once to prevent battery discharge.

Shifting Gears

Getting Started

CAUTION

The clutch must be fully disengaged before attempting a gear shift. Failure to fully disengage the clutch can result in equipment damage. (00182a)

The shift pattern is first gear down, next four gears up.

NOTE:

Always start engine with transmission in neutral. Always start motorcycle forward motion in first gear.

1. With motorcycle engine running and jiffy stand retracted, pull the clutch hand lever in against handlebar grip to fully disengage clutch.

2. Press the foot shift lever down to end of its travel and release. The transmission is now in first gear.

3. To start forward motion, ease out the clutch lever slowly and at the same time, open throttle gradually.

Upshift (Acceleration)

Refer to Upshift (Acceleration) Gear Speeds: VRSC Models. Engage second gear after the motorcycle has reached at the appropriate shifting speed.

Upshift (Acceleration) Gear Speeds: VRSC Models

GEAR CHANGE	MPH	KPH
First to second	15	25
Second to third	25	40
Third to fourth	35	55
Fourth to fifth	45	72

1. Close the throttle.

2. Disengage the clutch (pull clutch lever in).

3. See Gear Shift Lever (Upshift): VRSC Models. Lift the gear shift lever up to the end of its travel and release.

4. Ease out the clutch lever and gradually open the throttle.

5. Repeat the previous steps to engage third, fourth, and fifth gears.

NOTES:

- *Disengage the clutch completely before each gear change.*
- *Partially close the throttle so the engine will not drag when clutch is again engaged (clutch lever released).*

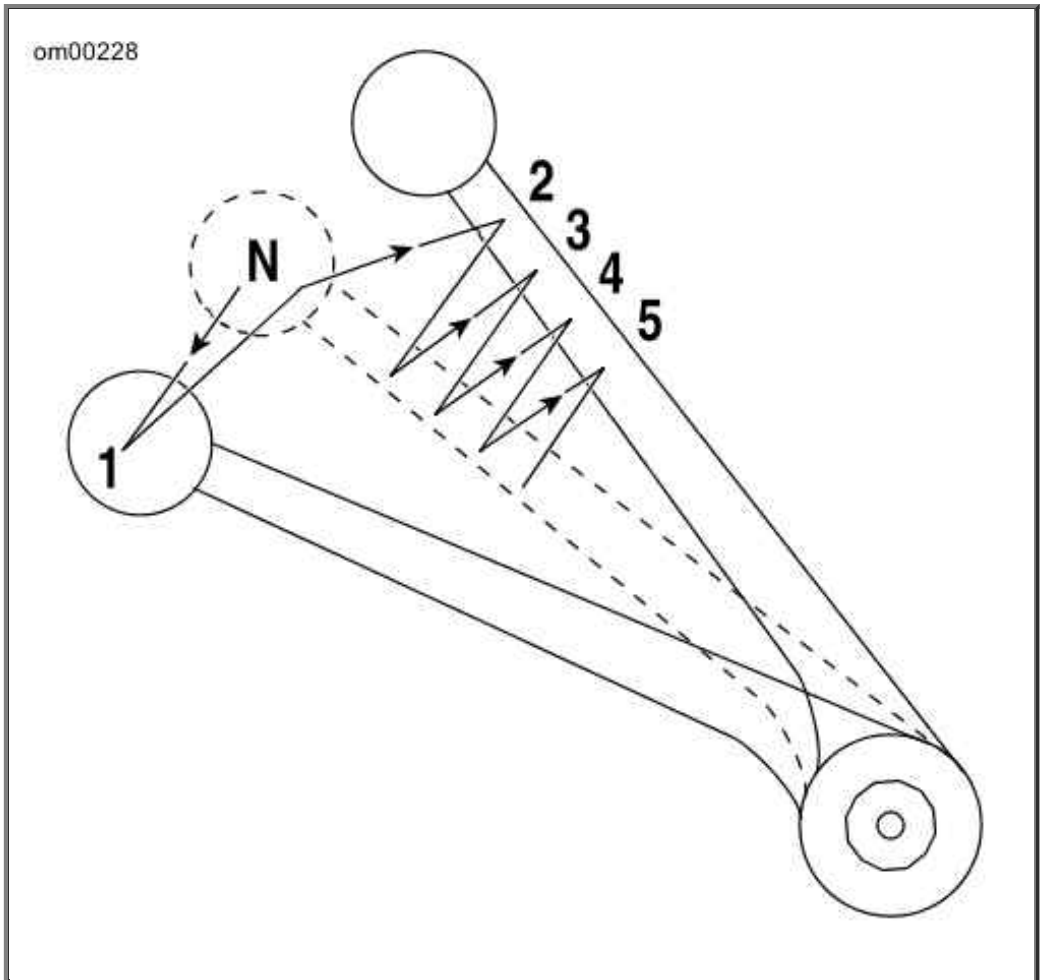

Gear Shift Lever (Upshift): VRSC Models

Downshift (Deceleration)

⚠WARNING

Do not downshift at speeds higher than those listed in the Changing Gear Speeds table. Shifting to lower gears when speed is too high can cause the rear wheel to lose traction and lead to loss of vehicle control, which could result in death or serious injury. (00045a)

Gear shift pattern is first gear down; next four gears up. Refer to Downshift (Deceleration) Gear Speeds: VRSC Models for shifting speeds.

Downshift (Deceleration) Gear Speeds: VRSC Models

GEAR CHANGE	MPH	KPH
Fifth to fourth	40	65
Fourth to third	30	50
Third to second	20	30
Second to first	10	15

NOTE:

The shifting points shown in the tables are recommendations. Vehicle owners may determine that their own individual shifting patterns may differ than those stated and are additionally appropriate for individual riding styles.

See Gear Shift Lever (Downshift): VRSC Models. When engine speed decreases, as in climbing a hill or running at a reduced speed, shift to the next lower gear while partially closing the throttle so the engine accelerates as soon as the clutch lever is released.

NOTES:

- *Disengage the clutch completely before each gear change.*
- *Partially close the throttle so the engine will not drag when clutch is again engaged (clutch lever released).*

CAUTION

Shift to neutral before stopping engine. Shifting mechanism can be damaged by shifting gears while engine is stopped. (00183a)

The gear shifter mechanism permits shifting the transmission to neutral from either first or second gear.

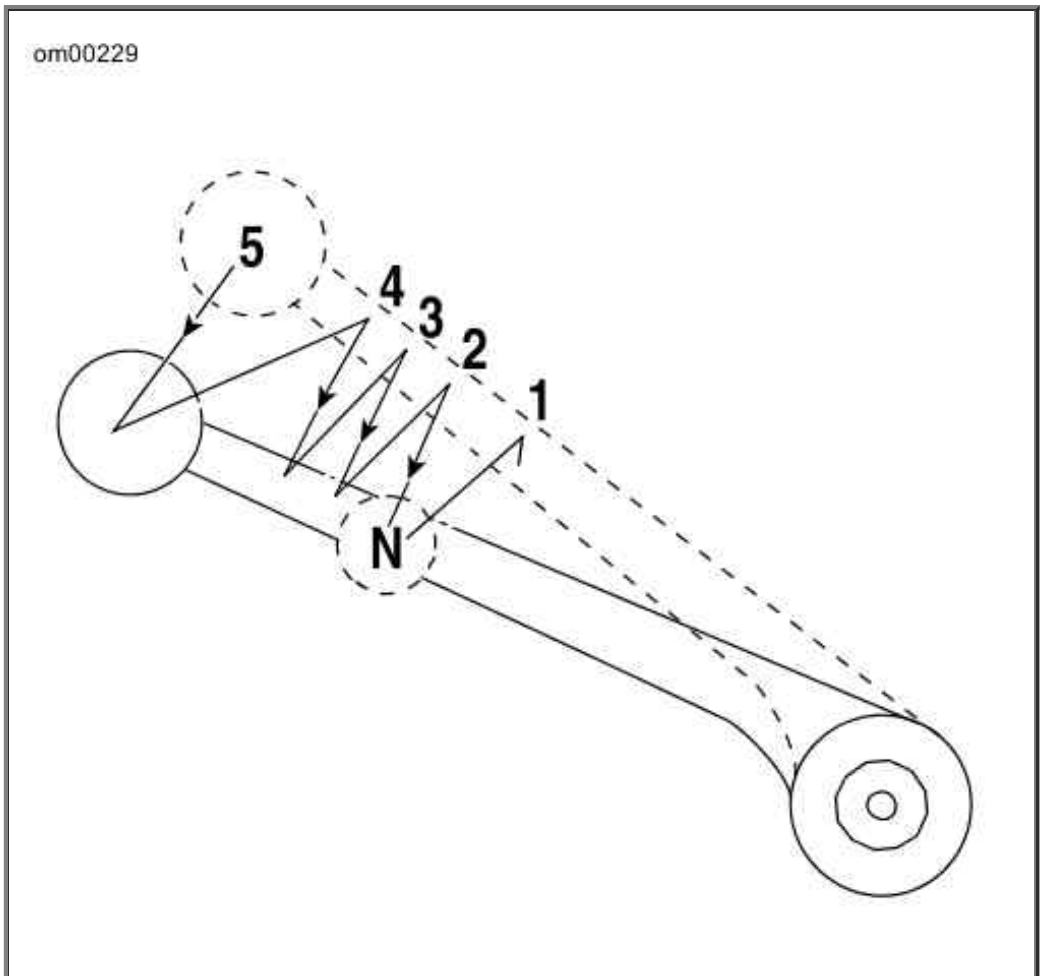

Gear Shift Lever (Downshift): VRSC Models

Maintenance and Lubrication

Safe Operating Maintenance: VRSC Models

⚠WARNING

Perform the service and maintenance operations as indicated in the regular service interval table. Lack of regular maintenance at the recommended intervals can affect the safe operation of your motorcycle, which could result in death or serious injury. (00010a)

Good maintenance means a safe machine. A careful check of certain equipment must be made after periods of storage and frequently between the regular service intervals to determine if additional maintenance is necessary.

Check the following items:

1. Tires for correct pressure, abrasions or cuts.
2. Drive belt for proper tension.
3. Brakes, steering and throttle for responsiveness.
4. Brake fluid level and condition. Hydraulic lines and fittings for leaks. Also, check brake pads and discs for wear.
5. Throttle cables for fraying or crimping and free operation.
6. Engine oil level.
7. Engine coolant level.
8. Clutch fluid level.
9. Headlamp, tail lamp, brake lamp and directional lamp operation.

Break-in Maintenance

NOTE:

The performance of new motorcycle initial service is required to keep your new motorcycle warranty in force and to assure proper emissions system operation.

Refer to Regular Service Intervals: 2008 VRSC Models. After a new motorcycle has been ridden its first 1000 miles 1600 kilometers , it should be taken to an authorized Harley-Davidson dealer for initial service operations.

Engine Lubrication

CAUTION

Do not switch lubricant brands indiscriminately because some lubricants interact chemically when mixed. Use of inferior lubricants can damage the engine. (00184a)

Engine oil is a major factor in the performance and service life of the engine. Always use the

proper grade of oil for the lowest temperature expected before the next scheduled oil change. Refer to Recommended Engine Oils: VRSC Models. Your authorized dealer has the proper oil to suit your requirements.

If it is necessary to add oil and Harley-Davidson oil is not available, use an oil certified for diesel engines. Acceptable diesel engine oil designations include: CF-4, CG-4, CH-4 and CI-4.

The preferred viscosities for the diesel engine oils in descending order are: 20W50, 15W40 and 10W40.

At the first opportunity, see an authorized dealer to change back to 100 percent Harley-Davidson oil.

Recommended Engine Oils: VRSC Models

HARLEY-DAVIDSON TYPE	VISCOSITY	HARLEY-DAVIDSON RATING	LOWEST AMBIENT TEMPERATURE	COLD WEATHER STARTS BELOW 50° F (10° C)
HD Multi-grade	SAE 10W40	HD 360	Below 40° F (4° C)	Excellent
HD Multi-grade	SAE 20W50	HD 360	Above 40° F (4° C)	Good

Checking Oil Level: VRSC Models

NOTE:

This engine has a wet sump, an integral transmission, gear driven primary drive and wet clutch. This design allows engine oil in the sump to be used to lubricate the engine, transmission and primary drive. The clutch and primary drive are housed on the right side of the engine.

CAUTION

Oil level cannot be accurately measured on a cold engine. For pre-ride inspection with the motorcycle upright (not leaning on jiffy stand) on level ground, the oil should register approximately at the midpoint of the cross-hatch area on the dipstick when the engine is cold. Do NOT add oil to bring the level to the FULL mark on a COLD engine. (00186a)

See Dipstick Location: VRSC Models. Dipstick is located on left side at front of engine.

Cold Engine Oil Level Check

Check the oil level with the engine **COLD** as follows:

1. Stand the motorcycle upright (not leaning on the jiffy stand) on a level surface.
2. See Dipstick Location: VRSC Models. Unscrew the oil filler cap (with attached dipstick)

by turning the filler cap counterclockwise. Remove the filler cap and dipstick and wipe the dipstick clean.

3. Screw the filler cap into the engine. Make sure the cap is fully seated on the crankcase.

4. See Engine Oil Level: VRSC Models. Remove the filler cap again and check the oil level on the dipstick.

5. If the oil level is below the midpoint of the cross-hatch area on the dipstick, add enough Harley-Davidson oil to bring the level up to the midpoint of the cross-hatch area shown.

CAUTION

Do NOT operate the engine when the oil level is below the add mark on the dipstick at operating temperature. Engine damage could result. (00493b)

CAUTION

To avoid over-filling the oil sump, wait approximately three minutes after adding oil before checking the oil level with the dipstick. An over-filled sump can cause engine damage. (00188a)

Dipstick Location: VRSC Models

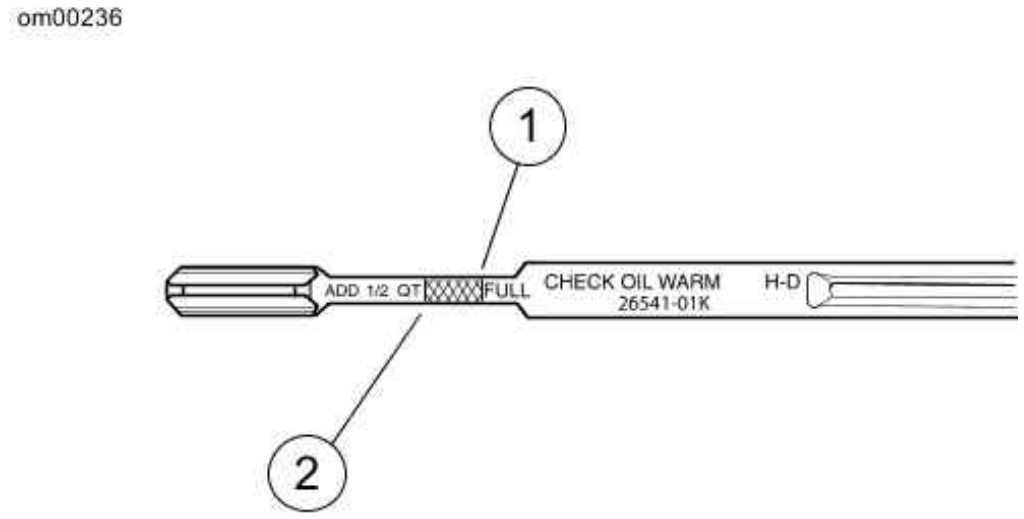

1. Full mark
2. Add mark. Do NOT operate the engine when the oil level is below the add mark at operating temperature.

Engine Oil Level: VRSC Models

Hot Engine Oil Level Check

Check the oil level with the engine at normal operating temperature as follows:

1. Stop the engine and allow the oil to drain into the sump for about two minutes.
2. Stand the motorcycle upright (not leaning on the jiffy stand) on a level surface.
3. See Dipstick Location: VRSC Models. Unscrew the oil filler cap (with attached dipstick) by turning the filler cap counterclockwise. Remove the filler cap and dipstick and wipe the dipstick clean.
4. Screw the filler cap into the engine. Make sure the cap is fully seated on the crankcase.
5. See Engine Oil Level: VRSC Models. Remove the filler cap again and check the oil level on the dipstick.
6. If the oil level is below the FULL mark on the dipstick, add enough Harley-Davidson oil to bring the level up to the FULL mark shown in Engine Oil Level: VRSC Models.

NOTE:

The engine will require a longer warm-up period in colder weather.

CAUTION

Do not allow hot oil level to fall below Add/Fill mark on dipstick. Doing so can result in equipment damage and/or equipment malfunction. (00189a)

CAUTION

Do not overfill oil sump. Doing so can result in oil carryover to the air cleaner leading to equipment damage and/or equipment malfunction. (00191a)

- Check the engine oil supply at each complete fuel refill.
- Refer to Regular Service Intervals: 2008 VRSC Models. The oil should be changed according to the Regular Service Intervals in the Maintenance Schedule in normal service at warm or moderate temperatures.
- Oil change intervals should be shorter in cold weather. See Winter Lubrication.
- The oil ADD mark is 1/2 quart (0.473 liters) to full.

Refer to the vehicle's service manual or see a Harley-Davidson dealer for proper procedures on draining the oil.

NOTE:

Dispose of oil in accordance with local regulations.

Changing Oil and Oil Filter: VRSC Models

See Applying Thin Oil Film. The oil filter is located on an oil filter mount in front of the engine.

⚠WARNING

Be sure that no lubricants or fluids get on tires, wheels or brakes when changing fluid. Traction can be adversely affected, which could result in loss of control of the motorcycle and death or serious injury. (00047d)

CAUTION

Do not switch lubricant brands indiscriminately because some lubricants interact chemically when mixed. Use of inferior lubricants can damage the engine. (00184a)

VRSC vehicles require a premium oil filter (Part No. 63793-01K).

1. See Oil Drain Plug: VRSC Model. Loosen the oil drain plug and completely drain the oil.

2. Remove the oil filter using an OIL FILTER WRENCH HD-42311 .

   NOTES:
   - *Removal of lower radiator support may make oil filter access easier.*
   - *Dispose of oil and oil filter in accordance with local regulations.*

3. Clean the filter gasket contact surface on the mounting plate (the surface should be smooth and free of any debris or old gasket material).

4. See Applying Thin Oil Film. Apply a thin film of oil to the gasket contact surface on the mounting plate, gasket and **new** oil filter.

5. Screw the filter onto the adapter until the gasket contacts the plate surface, then apply another 2/3-1 full turn.

6. See Oil Drain Plug: VRSC Model. Install the engine oil drain plug. Tighten the drain plug to 22-30 ft-lbs (30-40 Nm).

7. Refer to Capacities: 2008 VRSC Models. Fill the engine with the recommended amount of oil.

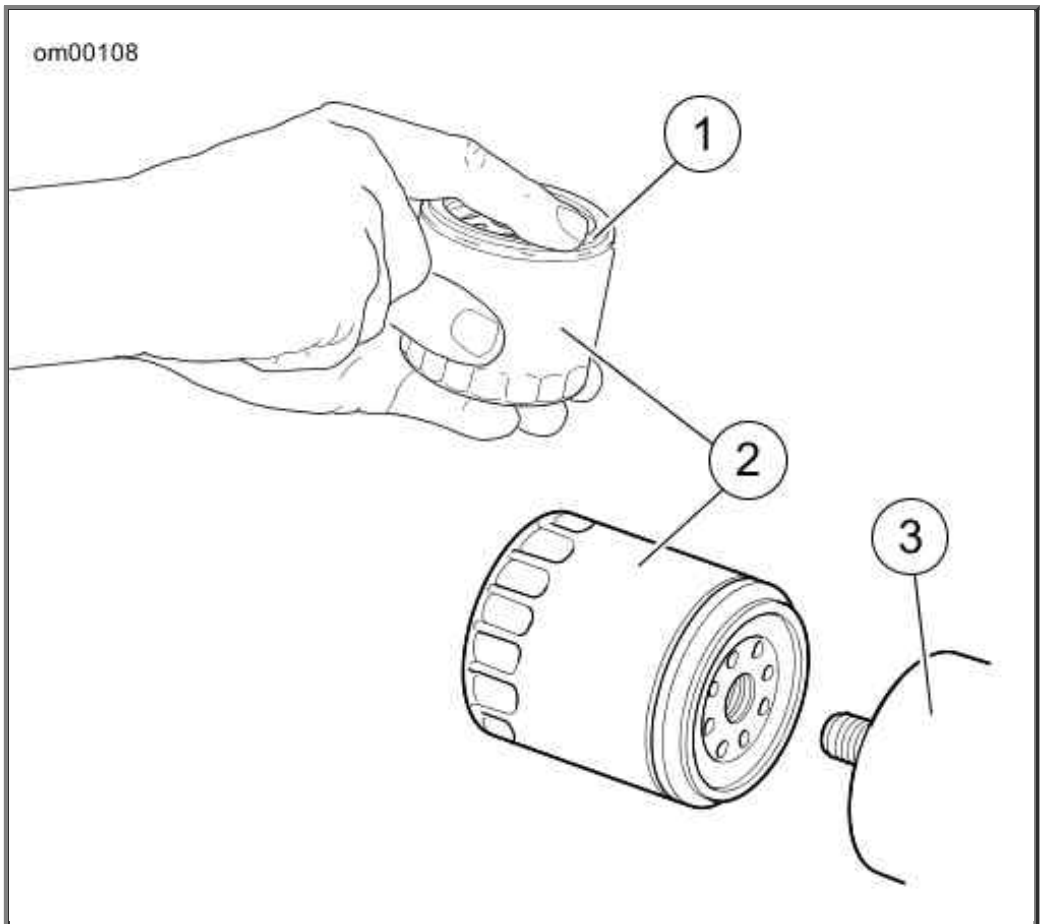

1. Thin oil film ONLY
2. Oil filter
3. Mounting plate

Applying Thin Oil Film

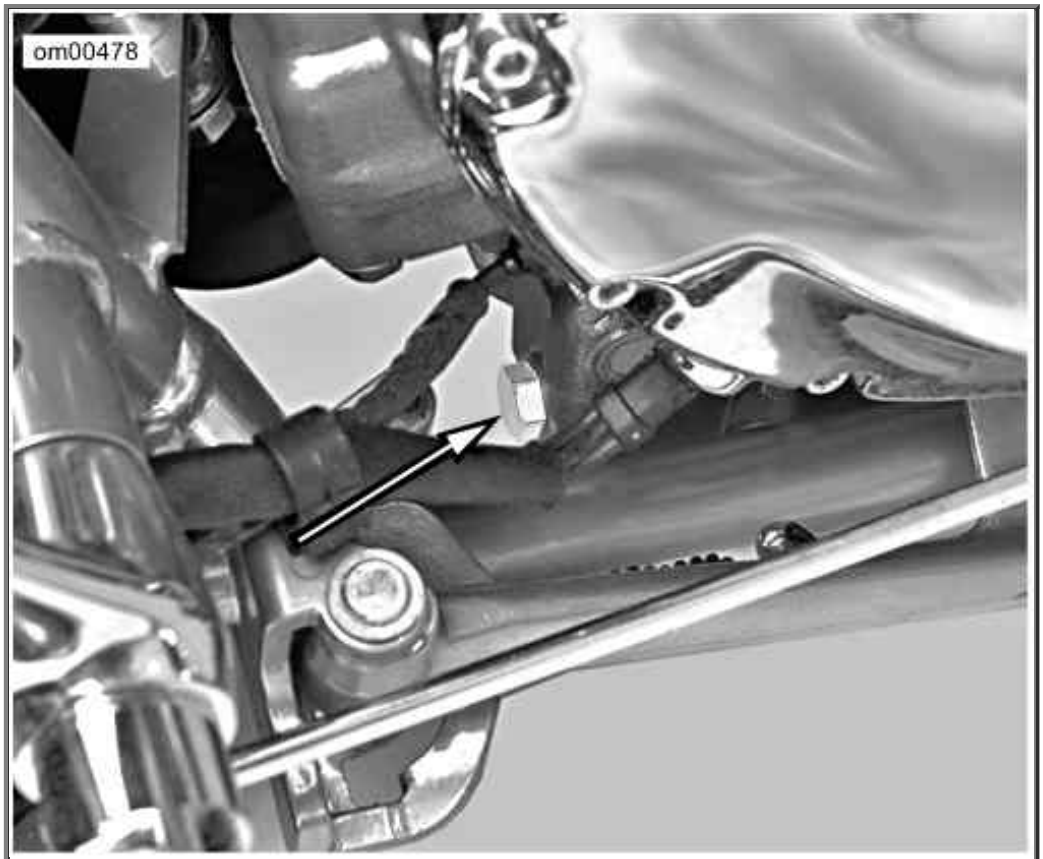

Oil Drain Plug: VRSC Model

Winter Lubrication

In colder climates, the engine oil should be changed often. If motorcycle is used frequently for short trips, less than 15 miles 24 kilometers , in ambient temperatures below 60° F 16° C , oil change intervals should be reduced to 1500 miles 2400 kilometers . Motorcycles used only for short runs must have a thorough tank flush-out before **new** oil is put in. The tank flush-out should be performed by an authorized dealer or qualified technician.

NOTE:

The further below freezing the temperature drops, the shorter the oil change interval should be.

Water vapor is a normal by-product of combustion in any engine. During cold weather operation, some of the water vapor condenses to liquid form on the cool metal surfaces inside the engine. In freezing weather this water will become slush or ice and, if allowed to accumulate too long, may block the oil lines and cause damage to the engine.

If the engine is run frequently and allowed to thoroughly warm up, most of this water will become vapor again and will be blown out through the crankcase breather.

If the engine is not run frequently and allowed to thoroughly warm up, this water will accumulate, mix with the engine oil and form a sludge that is harmful to the engine.

Coolant Level

GENUINE HARLEY-DAVIDSON EXTENDED LIFE ANTIFREEZE & COOLANT (Part No. 99822-02) provides protection to -34° F -36.7° C . In climates where the temperature falls below -34° F -36.7° C , consult a local Harley-Davidson dealer for the proper mixture.

CAUTION

Use ONLY Genuine Harley-Davidson Extended Life Antifreeze and Coolant. Use of other coolants/mixtures may lead to engine damage. (00179a)

If you find yourself in a location where Genuine Harley-Davidson Extended Life Antifreeze & Coolant is not available, you may use a 50-50 mixture of de-ionized water and Ethylene Glycol-based Antifreeze.

CAUTION

De-ionized water must be used with the antifreeze in the cooling system. Hard water can cause scale accumulation in water passages which reduces cooling system efficiency, leading to overheating and engine damage. (00195a)

Checking Coolant Level in Expansion Tank

1. Open the seat.
2. See Airbox Cover: VRSC Models. Remove the airbox cover by turning the bailhead fastener 1/4 turn counterclockwise. Pull the airbox cover away from the front locating holes.

⚠WARNING

Do not remove radiator filler cap when engine is hot. The cooling system is under pressure and hot coolant and steam can escape, which could cause severe burns. Allow engine to cool before servicing the cooling system. (00091a)

⚠CAUTION

At operating temperature, the radiator and oil cooler contain hot fluids. Contact with the radiator or oil cooler can result in minor or moderate burns. (00141a)

3. See Cold Full Line On Coolant Expansion Tank: VRSC Models. Check coolant level in expansion tank with coolant cold and motorcycle on jiffy stand.

⚠WARNING

Coolant mixture contains toxic chemicals, which may be fatal if swallowed. If swallowed, do not induce vomiting; call a physician immediately. Use in a well ventilated area. Irritation to skin or eyes can occur from vapors or direct contact. In case of skin or eye contact, flush thoroughly

with water and go to hospital, if necessary. Dispose of used coolant according to federal, state and local regulations. (00092a)

4. If level is below "COLD FULL" line on tank, remove cap from tank by using pull tab and add Harley-Davidson Extended Life Antifreeze & Coolant until fluid level reaches the "COLD FULL" line.

   NOTE:

   Genuine Harley-Davidson Extended Life Antifreeze & Coolant is pre-diluted and ready to use full-strength. Do NOT add water.

5. Replace the cap on the expansion tank.

6. Reinstall the airbox cover. Secure the cover by turning the bailhead fastener 1/4 turn clockwise.

   NOTE:

   If the coolant expansion tank is empty when the engine is cold, it is possible that air has been drawn into the cooling system. The system must be purged of any trapped air and refilled with coolant. See the VRSC service manual for instructions on the correct procedure.

CAUTION

Clean the front surface of the radiator regularly. Leaves and other debris can collect on the radiator surface and degrade radiator performance which could lead to engine overheating and engine damage. (00197b)

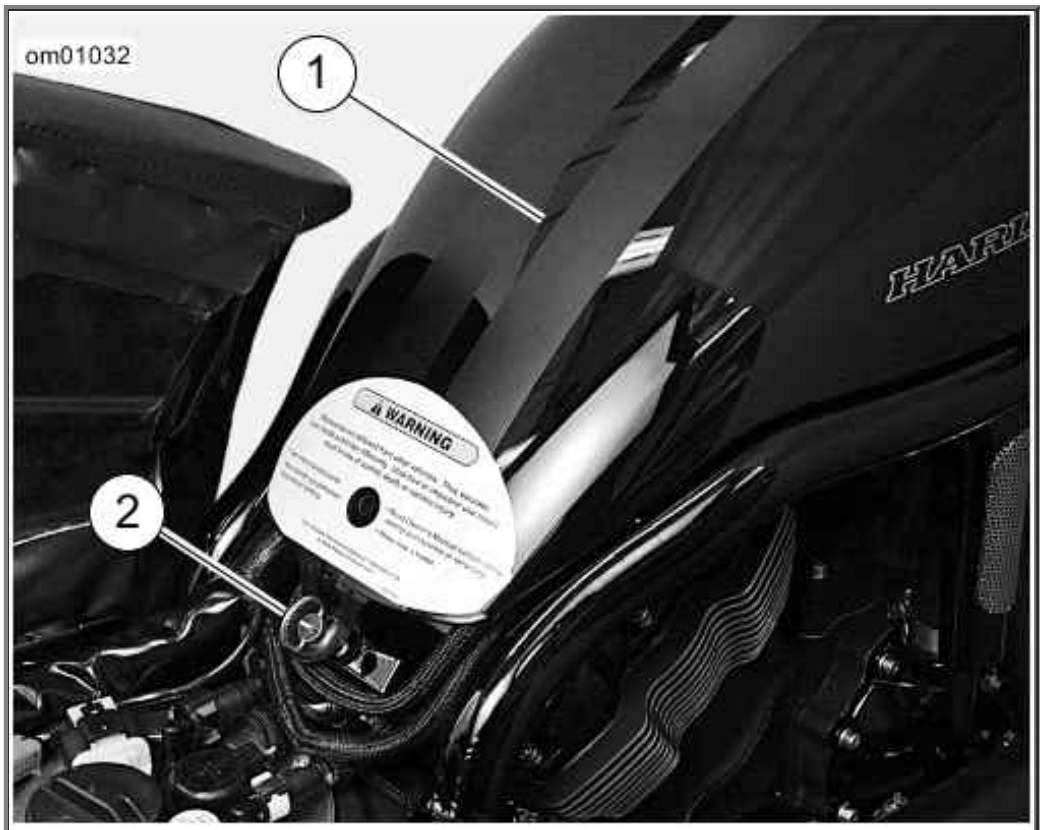

1. Airbox cover
2. Bailhead fastener

Airbox Cover: VRSC Models

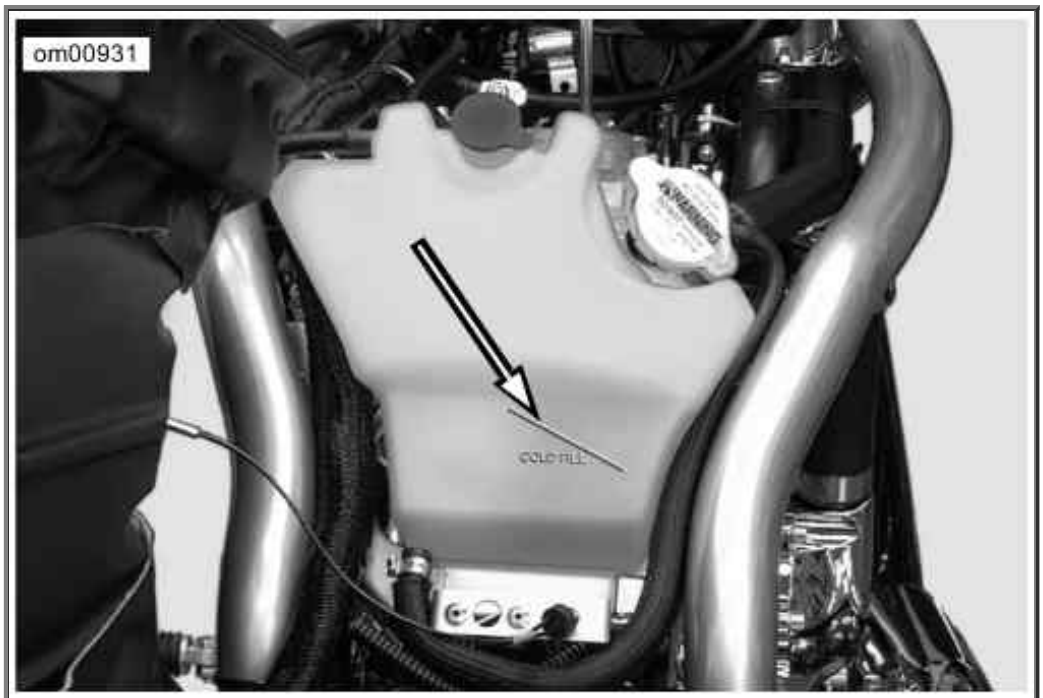

Cold Full Line On Coolant Expansion Tank: VRSC Models

Rear Drive Belt: VRSC Models

The inner tooth surface of the secondary belt has a thin coating of polyethylene lubricant. During initial operation, this coating will wear off as it is burnished into the belt fabric. This is a normal condition and not an indication of belt wear.

Refer to Regular Service Intervals: 2008 VRSC Models. Belt tension is set at the factory and should be checked after the first 1000 miles 1600 kilometers and at regular intervals thereafter.

NOTE:

See Belt Deflection Window: VRSC Models. Belt deflection window on the debris deflector is graduated in 2.0 mm increments.

See Check Belt Deflection: VRSC Models. Check belt tension with motorcycle cold, standing upright, transmission in neutral and no rider on the motorcycle. Use the BELT TENSION GAUGE HD-35381 to apply 10 lbs. 4.5 kg of force at the midpoint of the bottom belt strand.

Belt deflection should be 8 mm. If belt tension adjustment is necessary, see a Harley-Davidson dealer or follow the instructions given in the applicable Service Manual.

Check rear brake caliper position on rear brake disc. Disc should run true within brake caliper.

⚠WARNING

Be sure wheel and brake caliper are aligned. Riding with a misaligned wheel or brake caliper can cause the brake disc to bind and lead to loss of control, which could result in death or serious injury. (00050a)

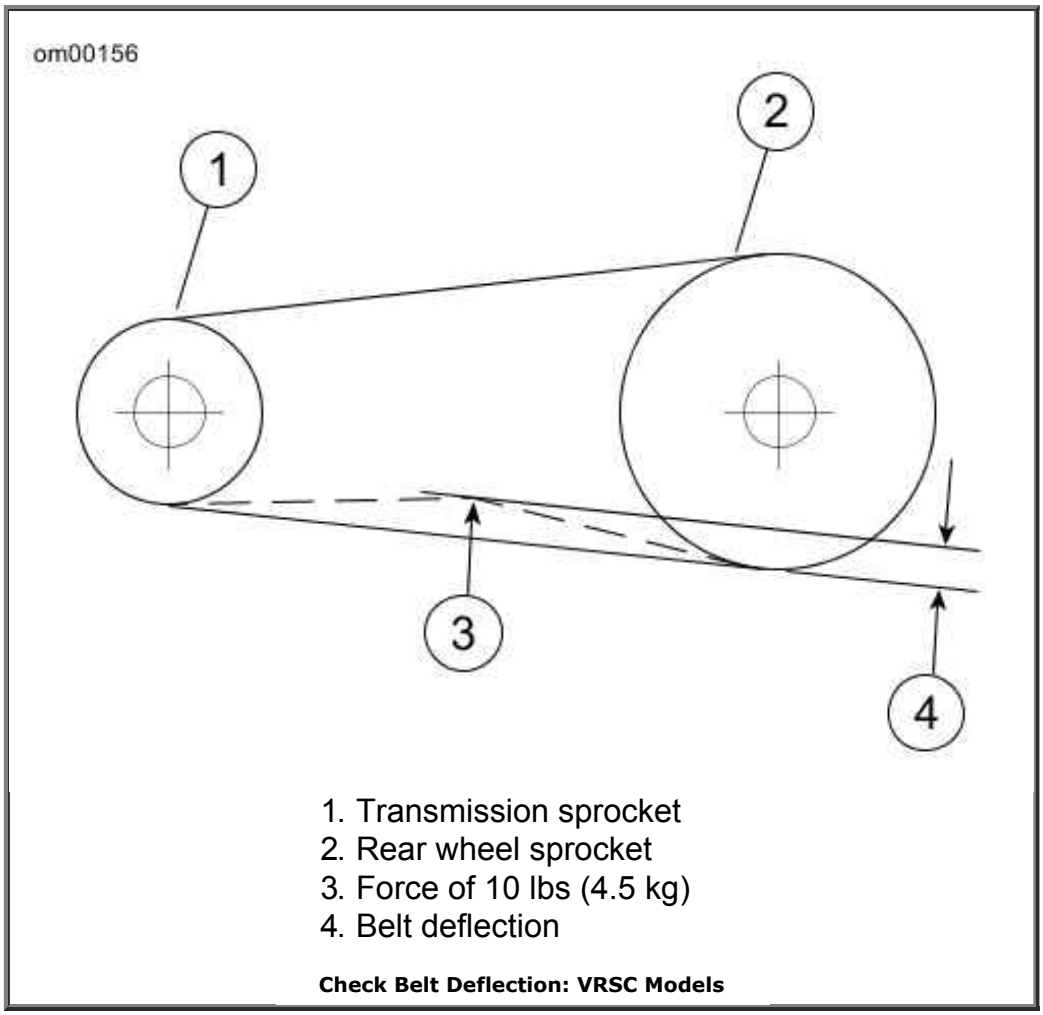

Check Belt Deflection: VRSC Models

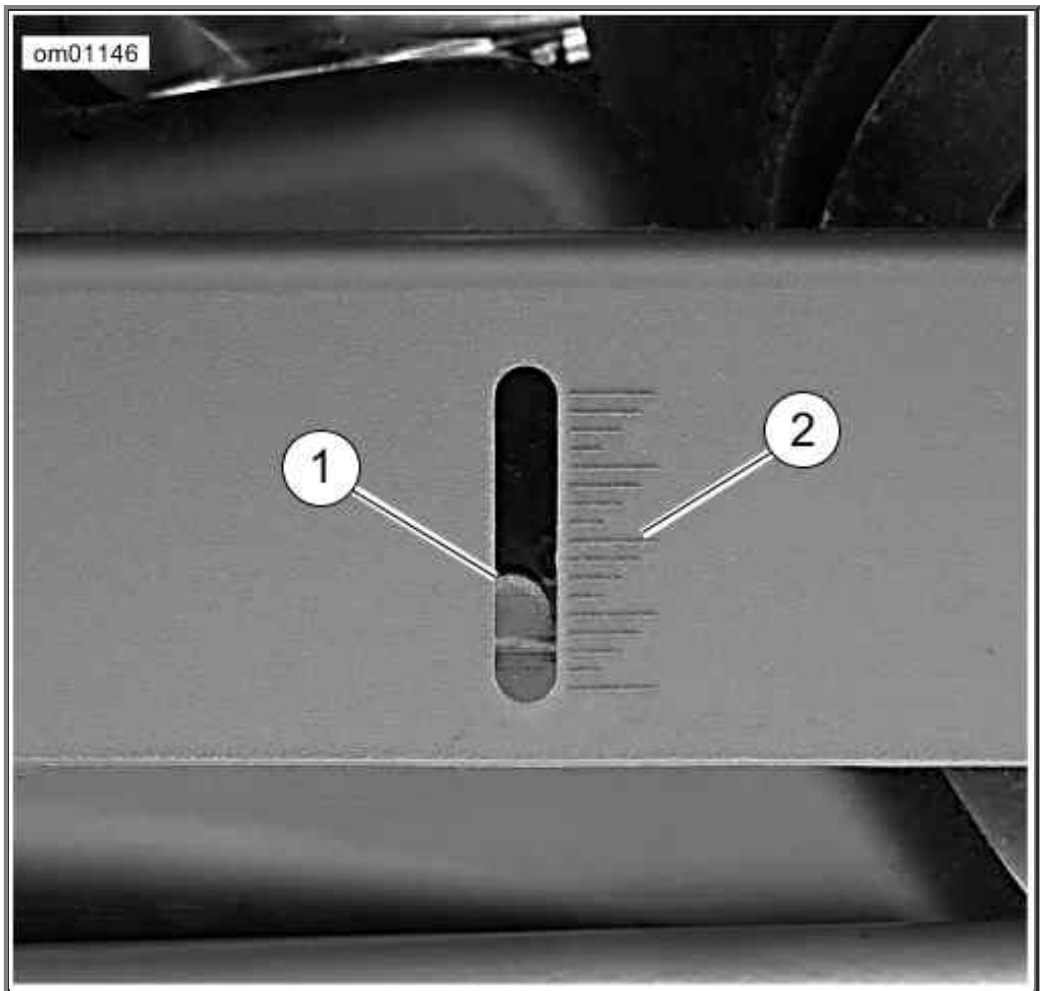

1. Rear drive belt
2. Deflection graduations in 2.0 mm increments

Belt Deflection Window: VRSC Models

Chassis Lubrication

Refer to Regular Service Intervals: 2008 VRSC Models for all maintenance schedules.

CAUTION

Do not switch lubricant brands indiscriminately because some lubricants interact chemically when mixed. Use of inferior lubricants can damage the engine. (00184a)

1. Use recommended special purpose grease for steering head bearings. Use a multipurpose chassis grease for other applications.
2. Remove and lubricate handlebar throttle control grip sleeve with fresh graphite at proper intervals.
3. Lubricate throttle control cables and clutch control cable at proper intervals.
4. Lubricate front brake hand lever and clutch control hand lever only if necessary.
5. Inspect rear fork pivot shaft bearings.
6. Pack the steering head bearings with fresh grease at proper intervals.

7. Lubricate the jiffy stand mechanism with LOCTITE AEROSOL ANTI-SEIZE at proper intervals.

NOTE:

For model specific information regarding the chassis lubrication, refer to the appropriate Service Manual or see a Harley-Davidson dealer.

Oil Applications

Refer to Regular Service Intervals: 2008 VRSC Models for all control connections and parts. Vehicle should be oiled at regular intervals, particularly after washing motorcycle or driving in wet weather.

Front Fork Oil

Refer to Regular Service Intervals: 2008 VRSC Models. Have a Harley-Davidson dealer drain the front fork oil and refill at proper intervals. If fork does not appear to be working properly or an appreciable amount of oil leakage should develop, see a Harley-Davidson dealer. If there is insufficient oil in either side of fork, the rebound action will be incorrect.

Fuel Filter

Fuel injected motorcycles have a fuel filter attached to the fuel pump.

NOTE:

For model specific information regarding fuel filter maintenance, refer to the appropriate Service Manual or see a Harley-Davidson dealer.

Clutch: VRSC Models

Squeezing the left hand lever causes the clutch master cylinder to actuate and apply pressure to the clutch actuation cylinder mounted in the engine right side cover. The actuation cylinder piston extends and contacts the clutch release bearing to release the clutch.

CAUTION

D.O.T. 4 brake fluid will damage painted and body panel surfaces it comes in contact with. Always use caution and protect surfaces from spills whenever brake work is performed. Failure to comply can result in cosmetic damage. (00239b)

Refer to Regular Service Intervals: 2008 VRSC Models. Check the fluid level as follows:

1. Stand the motorcycle upright (not leaning on the jiffy stand) on a level surface, so the top of the clutch master cylinder is level.

2. See Clutch Master Cylinder Reservoir. Clean all dirt and debris from the clutch master cylinder cover (1). Remove the two clutch master cylinder cover screws (2) and remove the cover.

3. Verify the fluid level in the clutch master cylinder reservoir is at the FULL LEVEL mark at the top of the ledge on the rear inside wall of the reservoir. If the fluid level is low, add D.O.T. 4 HYDRAULIC BRAKE FLUID (Part No. 99953-99A) approved for clutch system use and available from a Harley-Davidson dealer.

   NOTE:

   Do not overfill the clutch master cylinder reservoir. As the clutch friction discs wear, the piston in the clutch cylinder will force fluid back into the reservoir which could cause fluid overflow.

CAUTION

D.O.T. 4 hydraulic brake fluid is used in the hydraulic clutch. Do not use other types of fluids as they are not compatible and could cause equipment damage. (00353a)

CAUTION

Do NOT allow dirt or debris to enter the master cylinder reservoir. Dirt or debris in the reservoir can cause improper operation and equipment damage. (00205b)

⚠CAUTION

Direct contact of D.O.T. 4 brake fluid with eyes can cause irritation. Avoid eye contact. In case of eye contact flush with large amounts of water and get medical attention. Swallowing large amounts of D.O.T. 4 brake fluid can cause digestive discomfort. If swallowed, obtain medical attention. Use in well ventilated area. KEEP OUT OF REACH OF CHILDREN. (00240a)

4. Inspect the clutch master cylinder cover gasket for rips, cuts, cracks, or other signs of damage. Replace the gasket if necessary. Carefully place the cover and cover gasket on the master cylinder reservoir and secure with the two cover screws. Tighten the screws to 6-8 in-lbs (0.68-0.90 Nm).

   NOTE:

   If the fluid level in the clutch master cylinder reservoir is correct but the clutch does not operate properly, refer to the VRSC Service Manual or see a Harley-Davidson dealer for service.

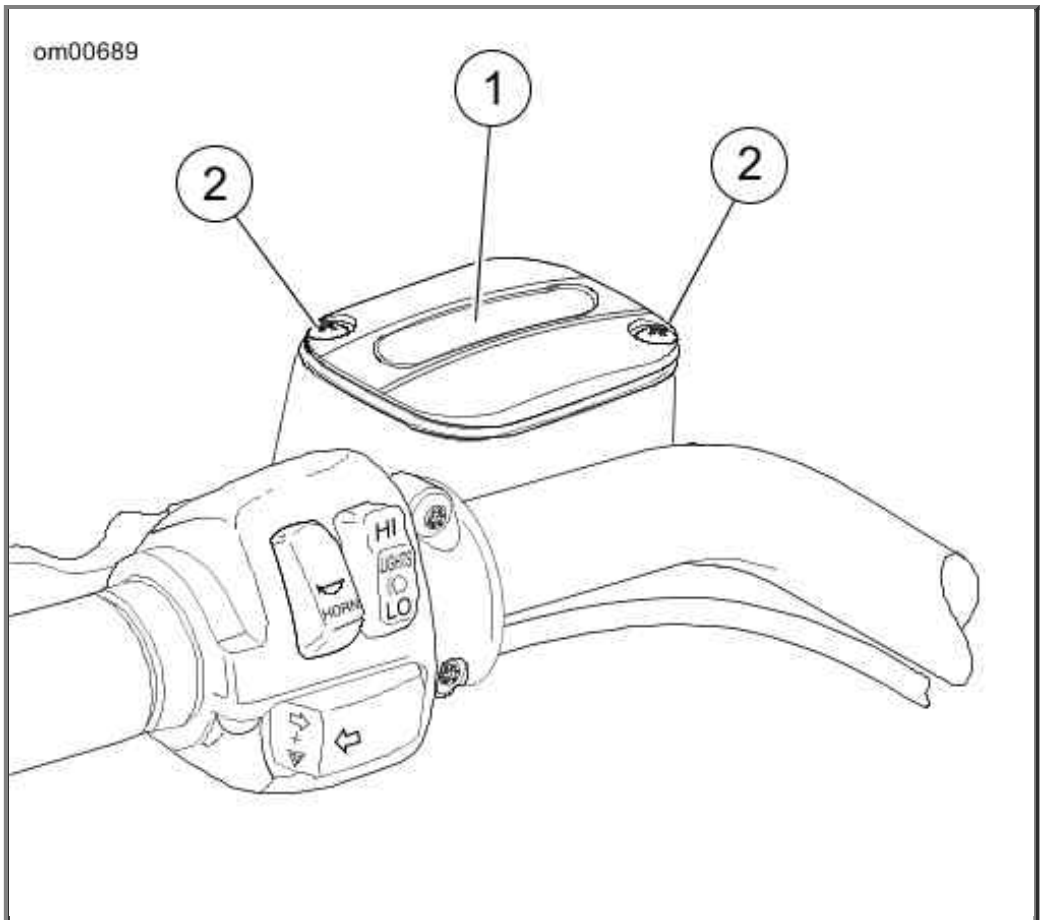

1. Cover
2. Screws (2)

Clutch Master Cylinder Reservoir

Front Fork Bearings

⚠WARNING

Adjustments to front fork bearings should be performed by a Harley-Davidson dealer. Improperly adjusted bearings can adversely affect handling and stability, which could result in death or serious injury. (00051a)

Refer to Regular Service Intervals: 2008 VRSC Models. Check front fork for proper bearing adjustment and lubricate bearings at proper intervals.

With motorcycle front end raised off the floor, be sure front fork turns freely without any binding or interference and that there is no appreciable front to rear fork shake indicating excessive bearing looseness. Steering head bearings should be adjusted according to Service Manual procedure, if necessary.

Rear Fork Pivot Shaft

Refer to Regular Service Intervals: 2008 VRSC Models. Check the tightness of the rear fork pivot shaft fastener at proper intervals.

NOTE:

For model specific information regarding the rear fork pivot shaft, refer to the appropriate Service

Manual or see a Harley-Davidson dealer.

Brakes: VRSC Models

⚠WARNING

Inspect brake pads for wear at service maintenance intervals. If you ride under adverse conditions (steep hills, heavy traffic, etc.), inspect more frequently. Excessively worn brake pads can lead to brake failure, which could result in death or serious injury. (00052a)

CAUTION

D.O.T. 4 brake fluid will damage painted and body panel surfaces it comes in contact with. Always use caution and protect surfaces from spills whenever brake work is performed. Failure to comply can result in cosmetic damage. (00239b)

NOTES:

- *Master cylinder cover specifies correct brake fluid.*
- *When adding or changing brake fluid, be sure to use only the type specified for your motorcycle.*
- *Use only Harley-Davidson D.O.T. 4 HYDRAULIC BRAKE FLUID (Part No. 99953-99A).*

Harley-Davidson has provided your new motorcycle with the optimum brake pad friction material available. It is selected to give the best performance possible under dry, wet and high operating temperature conditions. It exceeds all regulatory requirements currently in effect. However, during some braking conditions you may experience noise. This is normal for this friction material.

Refer to Regular Service Intervals: 2008 VRSC Models for brake system inspection intervals.

NOTE:

The rear brake master cylinder fluid level can also be viewed with a flashlight through back area of radiator cover trim making radiator cover removal unnecessary.

⚠WARNING

To prevent accidental vehicle start-up, which could cause death or serious injury, remove maxi-fuse before proceeding. (00251a)

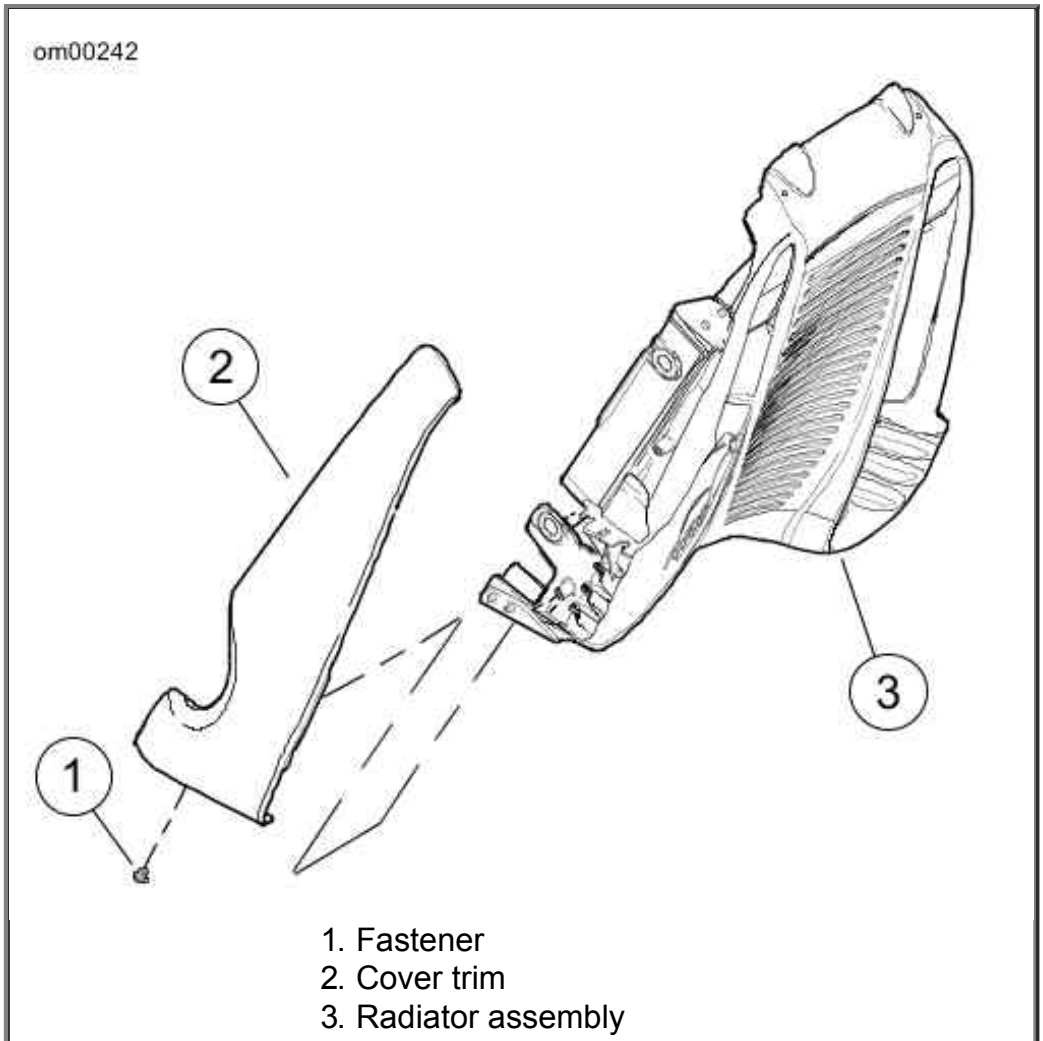

1. Fastener
2. Cover trim
3. Radiator assembly

Removing Right Side Radiator Cover Trim

Rear Brake Master Cylinder Reservoir: VRSC Models

1. Check the fluid level in the rear brake master cylinder reservoir.

    a. See Removing Right Side Radiator Cover Trim. Remove the fastener that secures the radiator cover side trim. Gently pull the bottom of the side trim outward, lift up on the trim to detach it from its upper attachment point and remove it from the motorcycle.

    b. See Rear Brake Master Cylinder Reservoir: VRSC Models. Verify the fluid level in the rear brake master cylinder reservoir is 1/2 in. 12.7 mm below the top of the reservoir, as viewed through the translucent plastic case of the reservoir.

    c. If the level is low, clean all dirt and debris from the reservoir cover. Remove the two reservoir cover screws and remove the cover. Add D.O.T. 4 HYDRAULIC BRAKE FLUID (Part No. 99953-99A) which is available from a Harley-Davidson dealer. Replace the reservoir cover and cover fasteners. Tighten the fasteners to 6-8 in-lbs (0.68-0.90 Nm).

    d. Carefully reinstall the radiator cover side trim and fastener. Tighten the fastener to 26.5-35.3 in-lbs (3-4 Nm).

2. Check the fluid level in the front brake master cylinder reservoir.

    a. Stand the motorcycle upright (not leaning on the jiffy stand) on a level surface, so the top of the front brake master cylinder is level.

    b. See Handlebar Controls: VRSC Models. Clean all dirt and debris from the front brake master cylinder cover. Remove the two master cylinder cover screws and remove the cover.

    c. Verify the fluid level in the front brake master cylinder reservoir is 0.2 in. 5 mm below the reservoir top. If the fluid level is low, add D.O.T. 4 HYDRAULIC BRAKE FLUID (Part No. 99953-99A) which is available from a Harley-Davidson dealer.

    d. Replace reservoir cover and cover fasteners. Tighten fasteners to 6-8 in-lbs (0.8-1.2 Nm).

NOTE:

Use only D.O.T. 4 HYDRAULIC BRAKE FLUID (Part No. 99953-99A) approved for brake system use and available from a Harley-Davidson dealer.

CAUTION

D.O.T. 4 brake fluid will damage painted and body panel surfaces it comes in contact with. Always use caution and protect surfaces from spills whenever brake work is performed. Failure to comply can result in cosmetic damage. (00239b)

⚠WARNING

Inspect brake pads for wear at service maintenance intervals. If you ride under adverse conditions (steep hills, heavy traffic, etc.), inspect more frequently. Excessively

worn brake pads can lead to brake failure, which could result in death or serious injury. (00052a)

3. Check the brake discs for wear.

⚠WARNING

Always replace brake pads in complete sets for correct and safe brake operation. Improper brake operation could result in death or serious injury. (00111a)

⚠WARNING

Brakes are a critical safety component. Contact a Harley-Davidson dealer for brake repair or replacement. Improperly serviced brakes can adversely affect brake performance, which could result in death or serious injury. (00054a)

4. See Brake Friction Material. Visual inspection of brake pads can be made without removing the caliper by viewing the lower area of each caliper with the aid of a flashlight. Replace the brake pads if the brake friction material is 0.016 in. 0.4 mm or less above the backing plate.

⚠WARNING

Perform routine scheduled brake maintenance. Lack of maintenance at recommended intervals can adversely affect brake performance, which could result in death or serious injury. (00055a)

NOTES:

- *If the brake pad friction material is 0.016 in. 0.4 mm thick or less, the pads must be replaced immediately.*
- *Always replace brake pads in pairs.*

The rear brake outer pad on all models can be measured from the caliper bracket side using a thin plastic 6 in. 152 mm rule.

Place the rule against the brake disc through the space alongside the caliper. If friction material measures less than 0.016 in. 0.4 mm , replace both brake pads immediately.

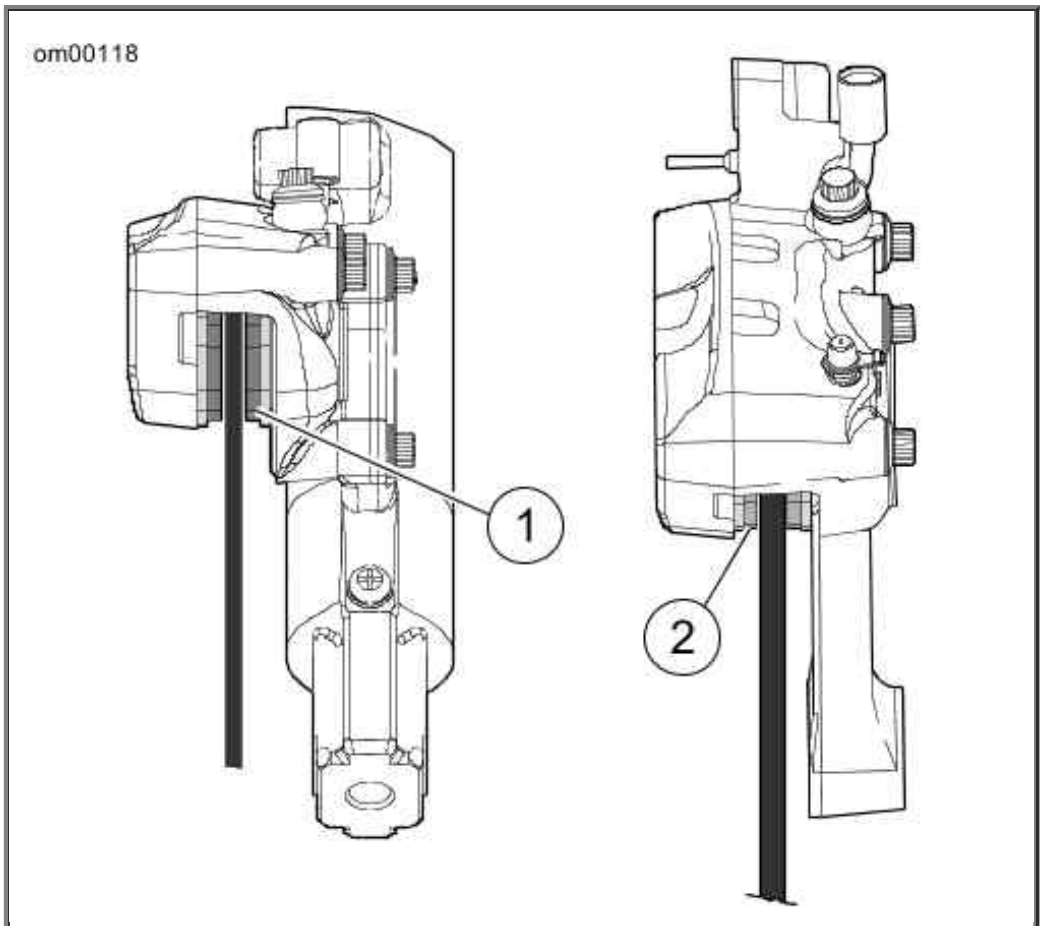

1. Front brake bottom view
2. Rear brake top view

Brake Friction Material

Tires: VRSC Models

⚠WARNING

Do not inflate tire beyond maximum pressure as specified on sidewall. Over inflated tires can blow out, which could result in death or serious injury. (00027a)

- Refer to Tire Pressures: 2008 VRSC Models. Be sure to keep tires properly inflated.
- Follow the data for correct cold tire inflation pressures.
- Check before riding when tires are cold.
- Do not over-inflate tires.

⚠WARNING

Match tires, tubes, air valves and caps to the correct wheel rim. Contact a Harley-Davidson dealer. Mismatching can result in damage to the tire bead, allow tire slippage on the rim or cause tire failure, which could result in death or serious injury. (00023a)

- Check inflation pressure and inspect the tread for punctures, cuts breaks, etc., at least weekly if in daily use or before each trip if used occasionally.

NOTE:

The VRSC features performance-oriented tires. These tires require more frequent inspection and may require more frequent replacement than Harley-Davidson touring model tires.

Refer to Tire Sizes: 2008 VRSC Models. Same original equipment tires should be used. Other tires may not fit correctly, could adversely affect handling and may be hazardous to use.

⚠WARNING

Tires are a critical safety component. Contact a Harley-Davidson dealer for tire repair or replacement. Improper tire service can adversely affect stability and handling, which could result in death or serious injury. (00057a)

⚠WARNING

Replace punctured or damaged tires. In some cases, small punctures in the tread area may be repaired from within the demounted tire by a Harley-Davidson dealer. Speed should NOT exceed 50 mph (80 km/h) for the first 24 hours after repair, and the repaired tire should NEVER be used over 80 mph (130 km/h). Failure to follow this warning could result in death or serious injury. (00015a)

⚠WARNING

Striking an object, such as a curb, can cause internal tire damage. If an object is struck, remove and inspect both the inside and outside of the tire. A damaged tire can adversely affect stability and handling, which could result in death or serious injury. (00058a)

Tire Replacement

Inspection

⚠WARNING

Harley-Davidson tires are equipped with wear bars that run horizontally across the tread. When wear bars become visible and only 1/32 in. (0.8 mm) tread depth remains, replace tire immediately. Using a worn tire can adversely affect stability and handling, which could result in death or serious injury. Use only Harley-Davidson approved replacement tires. (00090b)

See Tire Sidewall: VRSC Models. Arrows on tire sidewalls pinpoint location of wear bar indicators.

Tread wear indicator bars will appear on tire tread surfaces when 1/32 in. 0.8 mm or less of tire

tread remains. See Tread Surface Wear Bar (Typical): VRSC Models. Always replace tires before the tread wear indicator bars appear.

When To Replace Tires

New tires are needed if any of the following conditions exist:

1. Tread wear indicator bars become visible on the tread surfaces.
2. Tire cords or fabric become visible through cracked sidewalls, snags or deep cuts.
3. A bump, bulge or split in the tire.
4. Puncture, cut or other damage to the tire that cannot be repaired.

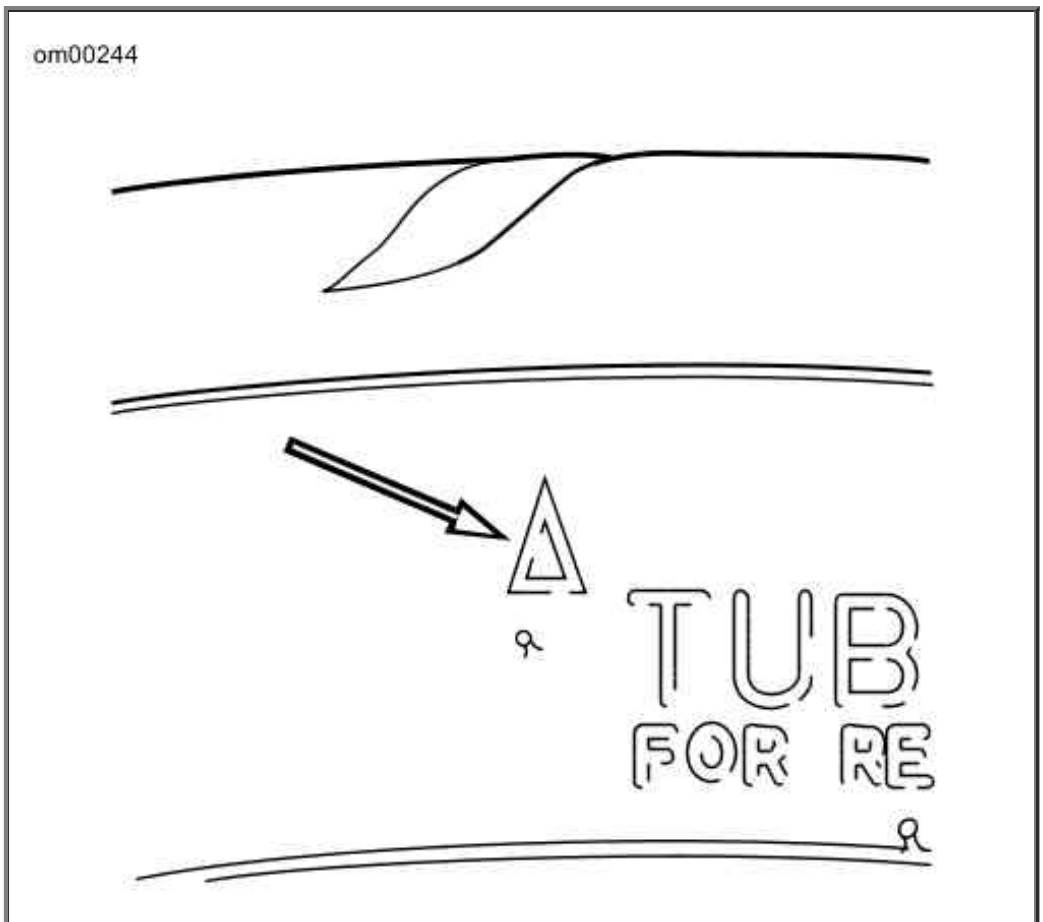

Tire Sidewall: VRSC Models

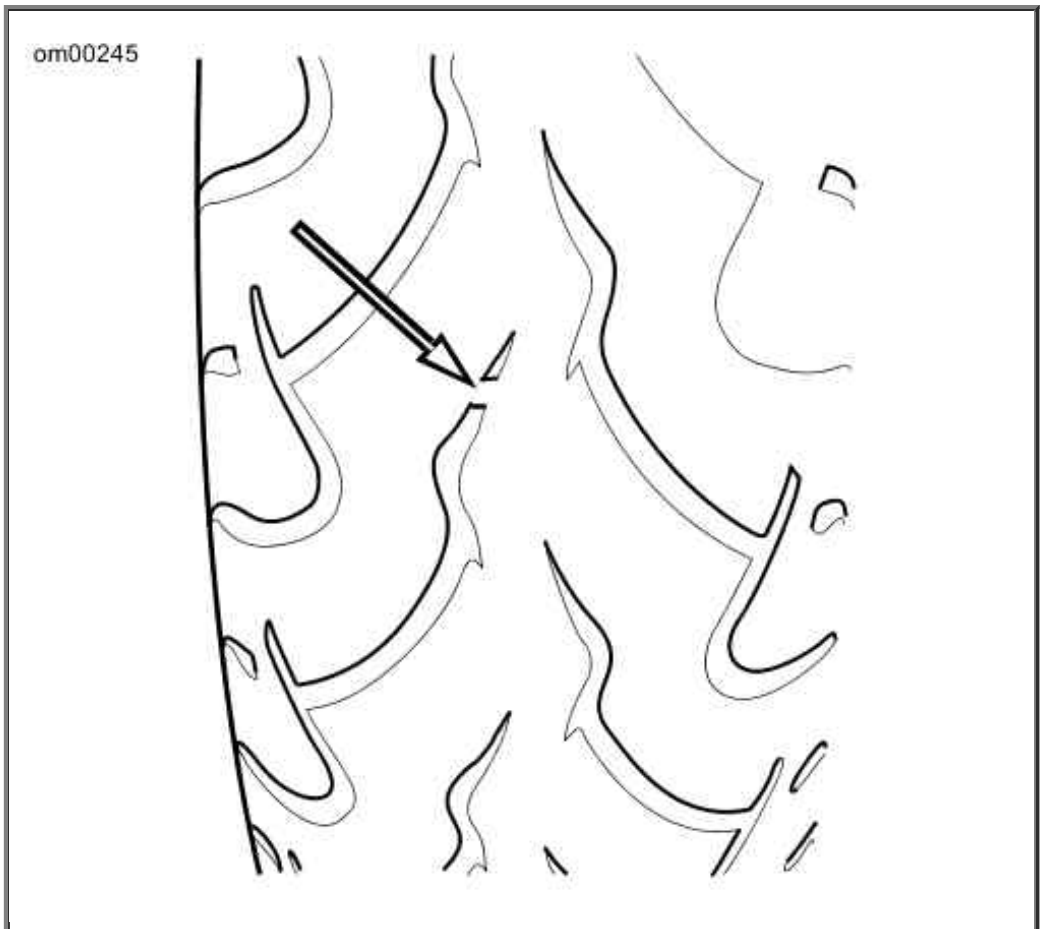

Tread Surface Wear Bar (Typical): VRSC Models

Spark Plugs/Coils: VRSC Models

Refer to Regular Service Intervals: 2008 VRSC Models. Check the spark plugs at proper mileage intervals.

⚠CAUTION

Do NOT pull on any electrical wires. Pulling on electrical wires may damage the internal conductor causing high resistance, which may result in minor or moderate injury. (00168a)

Before installing spark plugs, the gap should be checked and adjusted if necessary to 0.035 in. (0.89 mm).

Be sure your motorcycle has the correct spark plug. Use a **10R12A** spark plug.

Spark plugs must be tightened to the torque specified for proper heat transfer. Tighten spark plugs to 17 ft-lbs (23 Nm) per spark plug.

NOTES:

- *If a torque wrench is not available, tighten the spark plugs finger tight; then tighten an additional one quarter turn with a spark plug wrench.*
- *The VRSC is equipped with plug-top coils. To inspect the spark plugs, the coils must be removed. Consult the VRSC Service Manual for the proper service procedure.*

Shock Absorbers

Refer to Regular Service Intervals: 2008 VRSC Models. Inspect shock absorbers and rubber bushings for leaks and bushing deterioration at proper intervals.

Ignition

The engine in your motorcycle has been designed specifically to achieve optimum fuel economy within exhaust emission controls. Factory programmed ignition characteristics provide maximum engine performance and driveability.

Air Cleaner: VRSC Models

Refer to Regular Service Intervals: 2008 VRSC Models. The engine air cleaner is a paper/wire mesh air filter element. Inspect the filter element. Inspect more often under dusty conditions. Remove the air cleaner as follows:

1. Open seat.
2. See Airbox Cover: VRSC Models. Remove the airbox cover by turning the bailhead fastener 1/4 turn counterclockwise. Pull the airbox cover away from the front locating holes.
3. See Airbox Top: VRSC Models. Remove electrical connector (3) by pushing down on bail wire to unlock. The airbox top is retained by eight clips, three per side, one at the rear and one in the front under the snorkel. Release the clips and remove the airbox top.

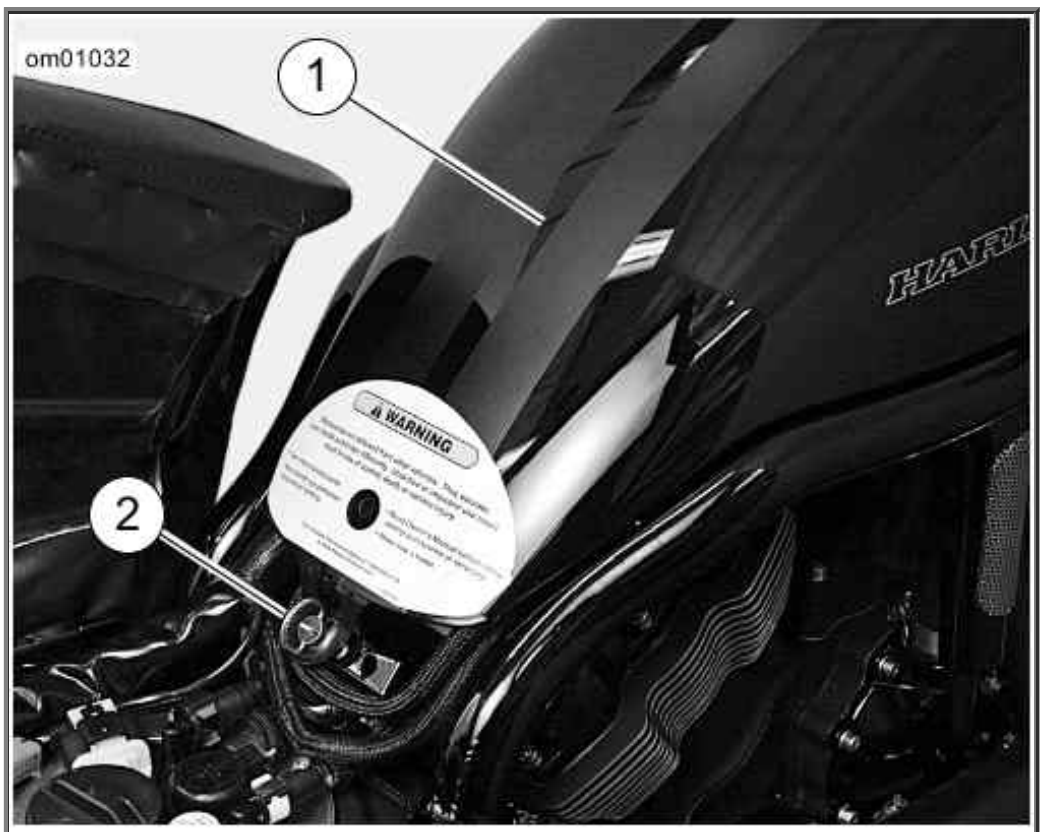

1. Airbox cover
2. Bailhead fastener

Airbox Cover: VRSC Models

1. Airbox top
2. Mounting clips
3. Electrical connector

Airbox Top: VRSC Models

4. See Air Cleaner Assembly: VRSC Models. Unscrew the wing nut securing the air cleaner cap. Remove the air cleaner cap and paper/wire mesh air filter element.

CAUTION

To prevent objects from falling down the velocity stacks, temporarily reinstall the air cleaner cap. (00208a)

5. Wash the paper/wire mesh air filter element in luke warm water with a mild detergent. Rinse thoroughly.

⚠WARNING

Compressed air can pierce the skin and flying debris from compressed air could cause serious eye injury. Wear safety glasses when working with compressed air. Never use your hand to check for air leaks or to determine air flow rates. (00061a)

6. Allow the filter element to either air dry or blow it dry from the inside with low pressure air.

7. Hold the filter element up to a strong light source. If light is uniformly visible through the element, it is sufficiently clean. Replace the filter element if it is damaged or if the filter media cannot be adequately cleaned.

NOTE:

Do not use air cleaner filter oil on Harley-Davidson paper/wire mesh air filter elements.

8. Remove the air cleaner cap. Place the air filter element in the bottom tray of the airbox. Install the air cleaner cap over the air filter element and secure with the wing nut.

CAUTION

Install air filter before running engine. Failure to do so can draw debris into the engine and could result in engine damage. (00207a)

9. Position the airbox top over the air filter assembly and fasten the clips along each side and the clip at the rear.
10. See Front Airbox Clip. The front clip under the snorkel is attached to the airbox top. Fasten the clip over the lip on the airbox bottom.
11. See Airbox Cover: VRSC Models. Position the airbox cover with the locating pins in the holes on the frame tabs.
12. Turn the bailhead fastener 1/4 turn clockwise to secure the airbox cover to the motorcycle.
13. Close seat.

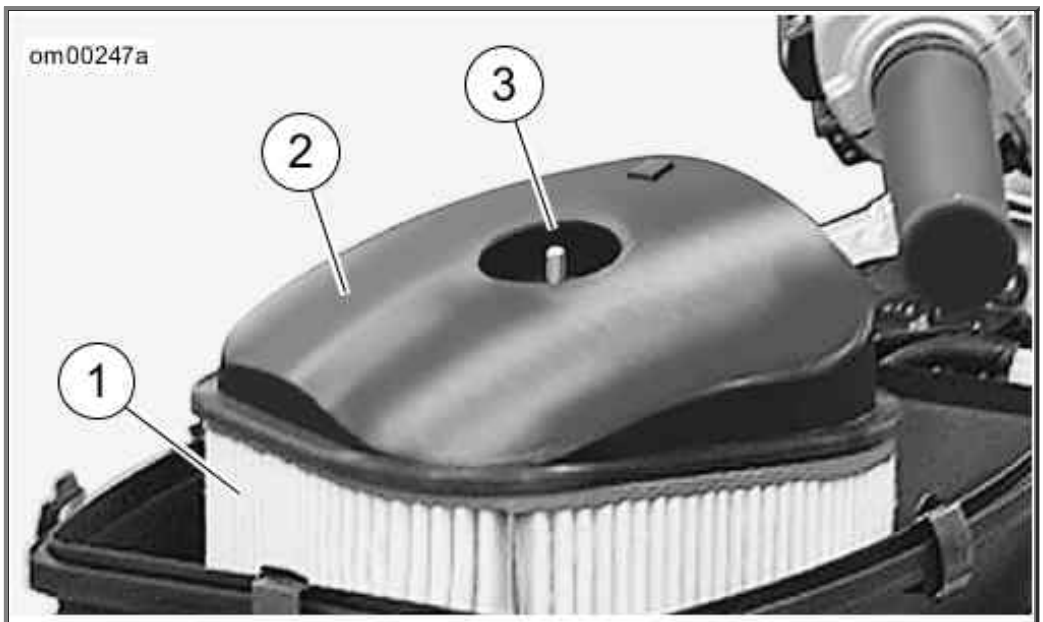

1. Air filter element
2. Air cleaner cap
3. Wing nut

Air Cleaner Assembly: VRSC Models

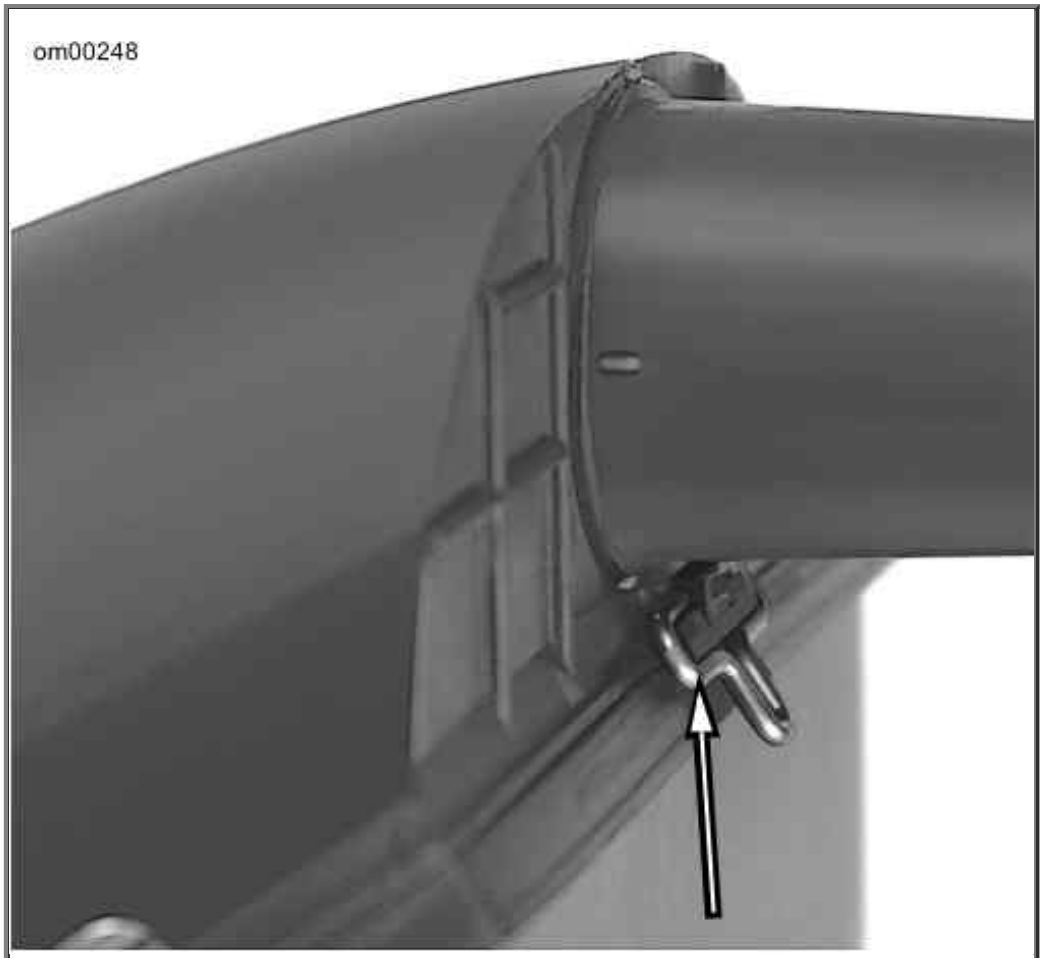

Front Airbox Clip

Headlamp: VRSC Models

See Headlamp: VRSC Models. All VRSC headlamp assemblies use replaceable quartz halogen bulb(s).

NOTE:

Refer to Bulb Chart: 2008 VRSC Models and see a service manual for more details.

CAUTION

When replacement is required, use only the specified sealed beam unit or bulb, available from a Harley-Davidson dealer. An improper wattage sealed beam or bulb, can cause charging system problems. (00209a)

CAUTION

Never touch the quartz bulb. Fingerprints will etch the glass and decrease bulb life. Grab the bulb with paper or a clean, dry cloth. Failure to do so could result in bulb damage. (00210a)

⚠WARNING

Handle bulb carefully and wear eye protection. Bulb

Handle bulb carefully and wear eye protection. Bulb contains gas under pressure, which, if not handled carefully, could cause serious eye injury. (00062b)

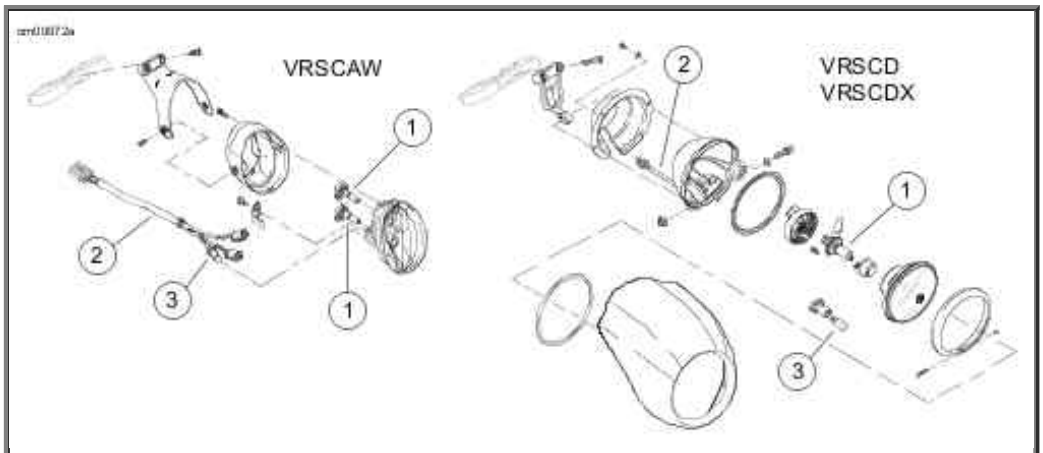

1. Headlamp bulbs
2. Position lamp harness (international only)
3. Position bulb (international only)

Headlamp: VRSC Models

Headlamp Alignment: VRSC Models

⚠WARNING

The automatic-on headlamp feature provides increased visibility of the rider to other motorists. Be sure headlamp is on at all times. Poor visibility of rider to other motorists can result in death or serious injury. (00030b)

Check headlamp for proper height and lateral alignment:

- When the new owner takes delivery of the motorcycle.
- When there is a change in load (adding luggage, etc.).

1. Refer to Tire Pressures: 2008 VRSC Models. Verify correct front and rear tire pressure.
2. Place motorcycle on level floor (or pavement) in an area with minimum light.
3. See Headlamp Alignment: VRSC Models. Position motorcycle 25 ft 7.6 m away from a screen or wall. Measure the vertical distance from center of headlamp to floor, and draw a horizontal line (2) 35 in. 0.9 m on screen or wall at same height above floor.

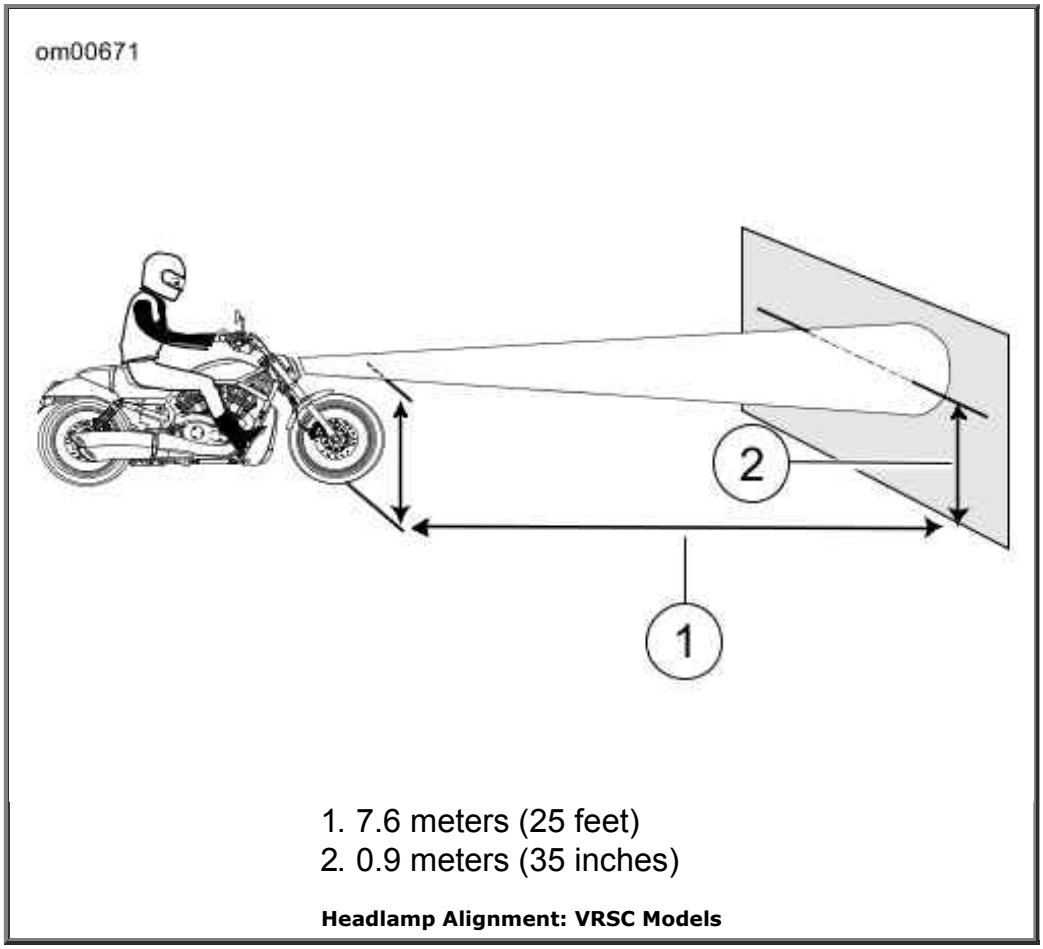

1. 7.6 meters (25 feet)
2. 0.9 meters (35 inches)

Headlamp Alignment: VRSC Models

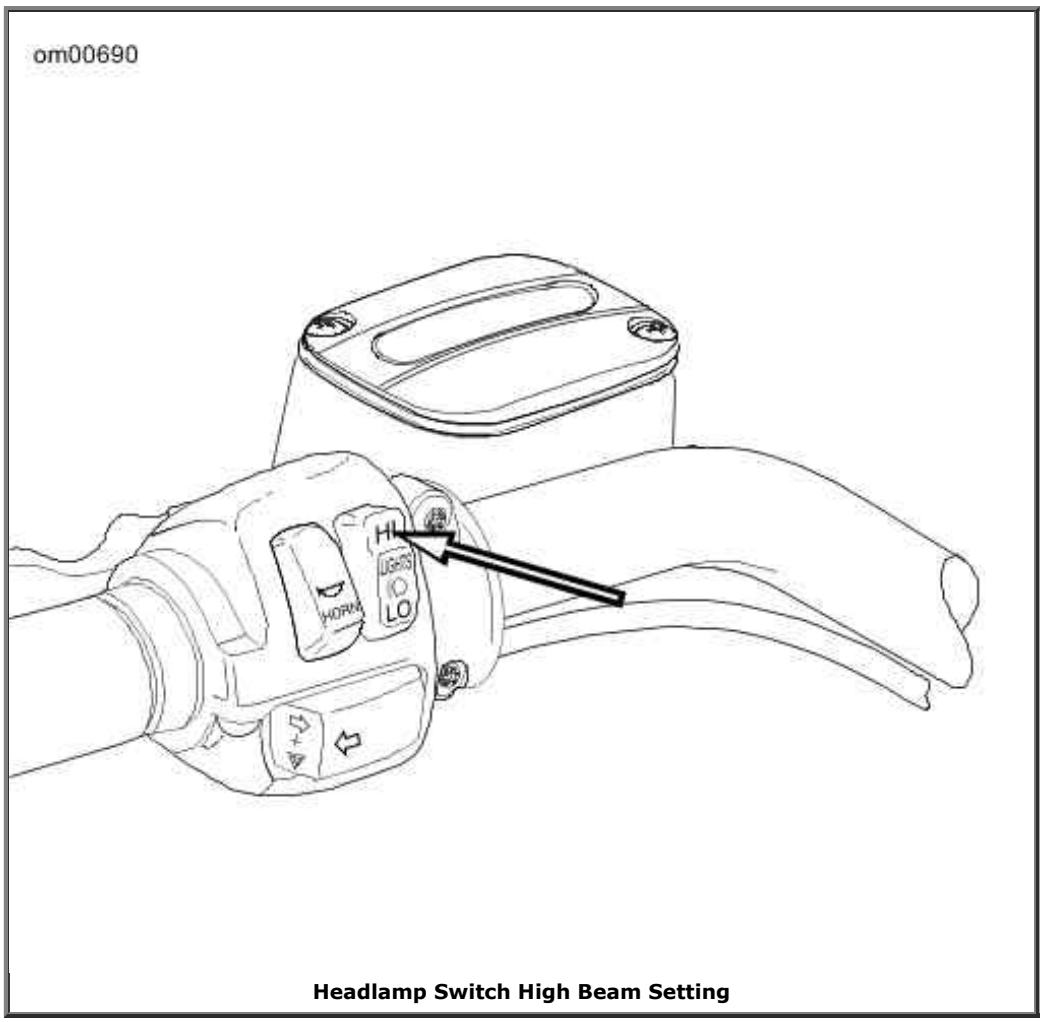

Headlamp Switch High Beam Setting

4. Load vehicle with rider, passenger (if normally present) and any cargo. Weight will compress vehicle suspension slightly.

5. Stand motorcycle upright with both tires resting on floor and with front wheel held in straight alignment (directly forward).

6. See Headlamp Switch High Beam Setting. Turn ignition switch ON. Set handlebar headlamp switch to HIGH beam position.

7. Check lamp beam for alignment.

8. See Headlamp Alignment Fastener: VRSCAW Models or Headlamp Alignment Fastener: VRSCD/VRSCDX Models. If adjustment is required:

    a. Loosen left and right fasteners.

    b. Move headlamp assembly to adjust vertical alignment.

    c. Tighten fasteners. For VRSCAW models, tighten to 40-66 in-lbs (4.5-7.5 Nm). For VRSCD and VRSCDX models, tighten to 23-30 ft-lbs (31-41 Nm).

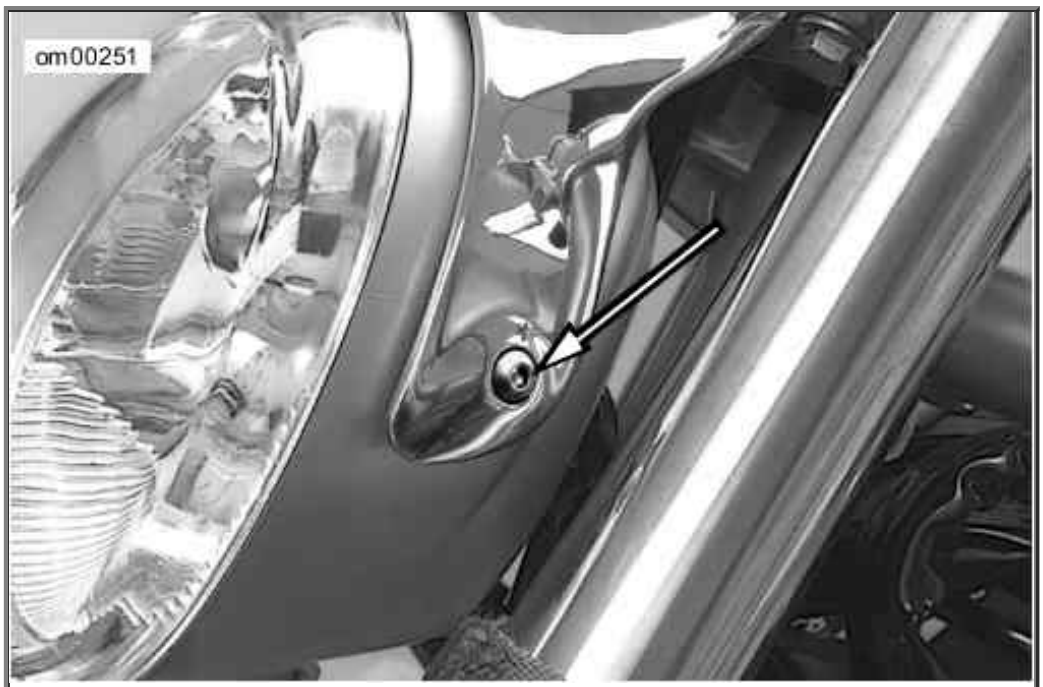

Headlamp Alignment Fastener: VRSCAW Models

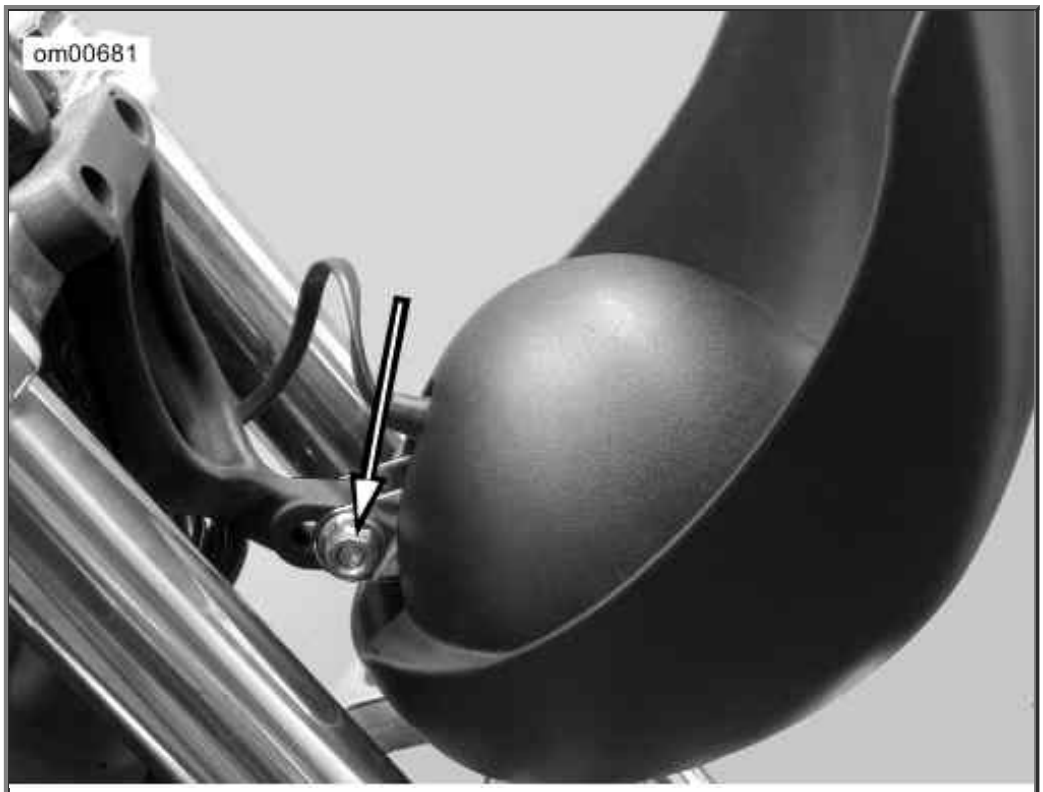

Headlamp Alignment Fastener: VRSCD/VRSCDX Models

Turn Signal Bulb Replacement: Bullet Style

1. See Lens Cap Notch. Insert a coin or the blade of a small screwdriver into the notch at the bottom of the lens cap. Carefully twist until the lens cap pops out of the lamp housing.
2. Push in bulb and rotate counterclockwise. Pull bulb from socket.
3. Inspect condition of electrical contacts in socket. If necessary, clean with a small wire brush and electrical contact cleaner.
4. Coat base of **new** bulb with ELECTRICAL CONTACT GREASE 99861-90 .
5. Orient index pins on **new** bulb with pin guides inside bulb socket. Push bulb in and turn clockwise to lock in place.
6. Snap lens cap back into the lamp holder. Rotate lens to position notch at bottom of lamp.

⚠WARNING

Be sure that all lights and switches operate properly before operating motorcycle. Low visibility of rider can result in death or serious injury. (00316a)

7. Turn ignition on and test for proper turn signal operation.

NOTE:

If the turn signal or running lamp will not light after replacing a bulb, check the wiring, the ground at the socket and/or the switch.

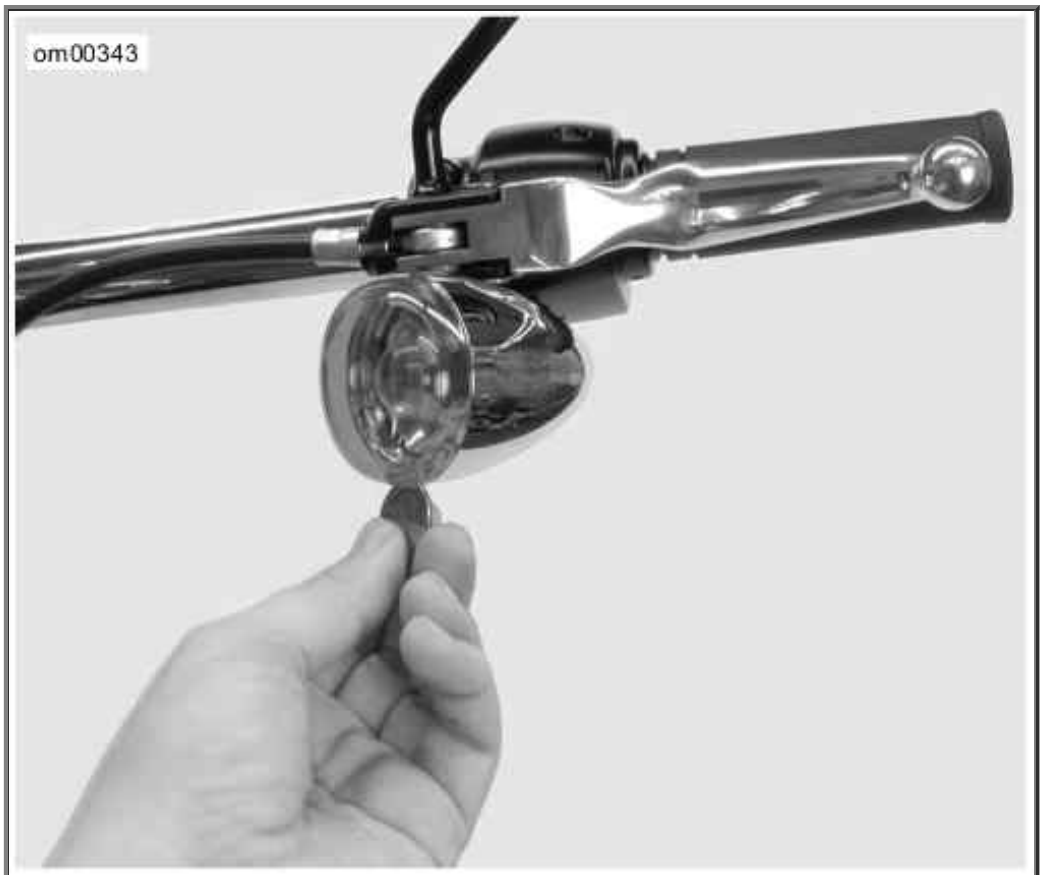

Lens Cap Notch

Tail Lamp Bulb Replacement: VRSC Models

1. See Releasing Tail Lamp Retaining Clip (typical). Insert a small screwdriver into middle hole of license plate lamp cover. Push forward with screwdriver to release tail lamp housing retaining clip.
2. Lift rear of tail lamp housing up and slide housing assembly away from fender.
3. See Tail Lamp Assembly: VRSC Models. Turn bulb socket assembly clockwise and pull outward from tail lamp housing.
4. Remove bulb by turning counterclockwise and pulling from bulb socket assembly.
5. Push **new** bulb into bulb socket assembly and turn clockwise.
6. Insert bulb socket assembly into tail lamp housing and turn counterclockwise to lock in place.
7. Route all electrical connectors and wiring harnesses to either side of tail lamp opening in fender, away from tail lamp bulb housing.

   NOTE:

   When installing tail lamp assembly, make sure tail lamp bulb is pointing toward rear of vehicle.

8. Insert tabs on front of tail lamp housing under forward edge of fender opening.
9. Carefully push tail lamp assembly toward front of vehicle.
10. Engage retaining clip with rear edge of fender opening. Gently press down on tail lamp

assembly until clip locks in place.

NOTE:

Retaining clip must engage rear fender opening for tail lamp to remain locked into position in rear fender.

⚠WARNING

Be sure that all lights and switches operate properly before operating motorcycle. Low visibility of rider can result in death or serious injury. (00316a)

11. Turn ignition on and test for proper tail lamp operation.

Releasing Tail Lamp Retaining Clip (typical)

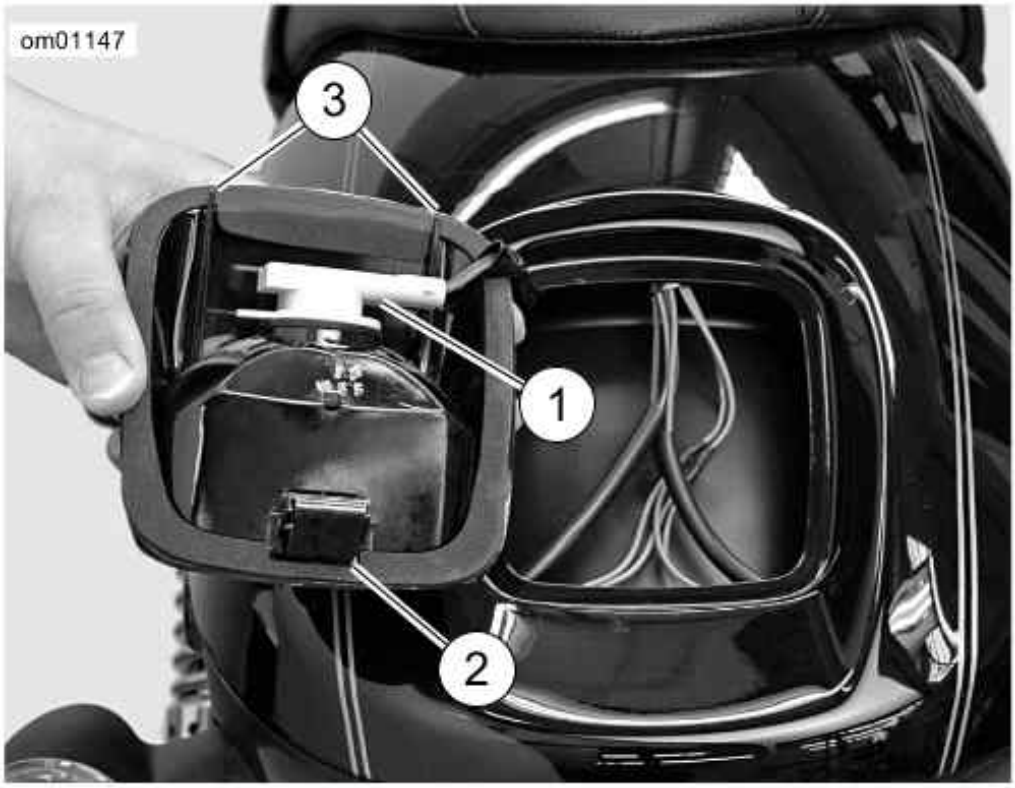

1. Tail lamp bulb socket assembly
2. Retaining clip
3. Mounting tabs

Tail Lamp Assembly: VRSC Models

Alternator/Voltage Regulator

Charging Rate

The alternator output is controlled and changed to direct current by the voltage regulator.

- The voltage regulator increases charging rate when battery is low or lamps are lit.
- The voltage regulator decreases charging rate when battery charge is up.

CAUTION

It is possible to overload your motorcycle's charging system by adding too many electrical accessories. If your combined electrical accessories operating at any one time consume more electrical current than your vehicle's charging system can produce, the electrical consumption can discharge the battery and cause vehicle electrical system damage. See a Harley-Davidson dealer for advice about the amount of current consumed by additional electrical accessories, or for necessary wiring changes. (00211b)

NOTES:

- *This unit requires no interval attention. If any electrical system trouble is experienced that might be traceable to the alternator or voltage regulator, the motorcycle should be taken to a*

Harley-Davidson dealer who has the necessary electrical testing equipment to give the required attention.
- *For model specific information regarding the voltage regulator, refer to the appropriate Service Manual or see a Harley-Davidson dealer.*

Battery: General

Type

Your motorcycle uses a permanently sealed, maintenance-free, lead/calcium and sulfuric acid battery. All batteries are shipped precharged and ready to be put into service. Do not attempt to open the battery for any reason.

Antidotes for Battery Acid

CONTACT	TREATMENT
External	Flush with water.
Internal	Drink large quantities of milk or water, followed by milk of magnesia, vegetable oil or beaten eggs. Get immediate medical attention.
Eyes	Flush with water. Get immediate medical attention.

⚠WARNING

Batteries contain sulfuric acid, which could cause severe burns to eyes and skin. Wear a protective face shield, rubberized gloves and protective clothing when working with batteries. KEEP BATTERIES AWAY FROM CHILDREN. (00063a)

⚠WARNING

Explosive hydrogen gas, which escapes during charging, could cause death or serious injury. Charge battery in a well-ventilated area. Keep open flames, electrical sparks and smoking materials away from battery at all times. KEEP BATTERIES AWAY FROM CHILDREN. (00065a)

⚠WARNING

Batteries, battery posts, terminals and related accessories contain lead and lead compounds, and other chemicals known to the State of California to cause cancer and birth defects or other reproductive harm. Wash hands after handling. (00019d)

⚠WARNING

Never remove warning label attached to top of battery. Failure to read and understand all precautions contained in warning, could result in death or serious injury. (00064a)

1. Contents are corrosive
2. Wear safety glasses
3. Contents are explosive
4. Keep flames away
5. Read instructions
6. Keep away from children

Battery Warning Label

Battery Warning Label

Voltmeter Test

Refer to Voltmeter Test. The voltmeter test provides a general indicator of battery condition. Check the voltage of the battery to verify that it is in a 100 percent fully charged condition. If the open circuit (disconnected) voltage reading is below 12.6V, charge the battery and then re-check the voltage after the battery has set for one to two hours.

Voltmeter Test

READING IN VOLTS	PERCENT OF CHARGE
12.7	100
12.6	75
12.3	50
12.0	25
11.8	0

Cleaning and Inspection

Battery top must be clean and dry. Dirt and electrolyte on top of the battery can cause battery to self-discharge.

1. Clean battery top.
2. Clean cable connectors and battery terminals using a wire brush or fine grit sandpaper to remove any oxidation.
3. Inspect and clean the battery screws, clamps and cables. Check for breakage, loose connections and corrosion.
4. Check the battery posts for melting or damage caused by overtightening.
5. Inspect the battery for discoloration, a raised top or a warped or distorted case. This might indicate that the battery has been frozen, overheated or overcharged.
6. Inspect the battery case for cracks or leaks.

Charging

Never charge a battery without first reviewing the instructions for the charger being used. In addition to the manufacturer's instructions, follow these general safety precautions.

Charge the battery if any of the following conditions exist:

- Vehicle lamps appear dim.
- Electric starter sounds weak.
- Battery has not been used for an extended period of time.

⚠WARNING

Explosive hydrogen gas, which escapes during charging,

could cause death or serious injury. Charge battery in a well-ventilated area. Keep open flames, electrical sparks and smoking materials away from battery at all times. KEEP BATTERIES AWAY FROM CHILDREN. (00065a)

⚠WARNING

Batteries contain sulfuric acid, which could cause severe burns to eyes and skin. Wear a protective face shield, rubberized gloves and protective clothing when working with batteries. KEEP BATTERIES AWAY FROM CHILDREN. (00063a)

1. Perform a voltmeter test to determine the state of charge. If battery needs to be charged, proceed to the next step.
2. Place the battery on a level surface.

⚠WARNING

Unplug or turn OFF battery charger before connecting charger cables to battery. Connecting cables with charger ON can cause a spark and battery explosion, which could result in death or serious injury. (00066a)

⚠WARNING

Connect positive (+) battery cable first. If positive (+) cable should contact ground with negative (-) cable connected, the resulting sparks can cause a battery explosion, which could result in death or serious injury. (00068a)

⚠WARNING

Disconnect negative (-) battery cable first. If positive (+) cable should contact ground with negative (-) cable connected, the resulting sparks can cause a battery explosion, which could result in death or serious injury. (00049a)

CAUTION

Do not reverse the charger connections described in the following steps or the charging system of the motorcycle could be damaged. (00214a)

NOTES:

- *The figures listed in the Amp-hour table assume that the battery is charging at room temperature. If warmer than room temperature, use a slightly shorter charging time. If colder, use a slightly longer charging time.*
- *The use of constant current chargers to charge sealed maintenance free batteries is*

not recommended. Any overcharge will cause dry-out and premature battery failure. If a constant current charger is the only type available, do not exceed the charge times listed in 19 Amp Hour Battery Charging Rates/Times and do not continue charging the battery if it gets hot. When charging, never exceed 15 volts.

3. Connect the red battery charger lead to positive (+) terminal of the battery.
4. Connect the black battery charger lead to negative (-) terminal of the battery.

   NOTE:

   If the battery is still in the vehicle, connect the negative lead to the chassis ground. Make sure that the ignition and all electrical accessories are turned off.

5. Step away from the battery and turn on the charger.

⚠WARNING

Unplug or turn OFF battery charger before disconnecting charger cables from battery. Disconnecting clamps with charger ON can cause a spark and battery explosion, which could result in death or serious injury. (00067a)

6. After the battery is fully charged, turn OFF the charger and disconnect the black battery charger lead to the negative (-) terminal of the battery.
7. Disconnect the red battery charger lead to the positive (+) terminal of the battery.
8. Mark the charging date on the battery.

19 Amp Hour Battery Charging Rates/Times

READING (VOLTS)	PERCENT OF CHARGE	3 AMP CHARGER	6 AMP CHARGER	10 AMP CHARGER	20 AMP CHARGER
12.7	100	-	-	-	-
12.6	75	1 hour 50 minutes	55 minutes	30 minutes	15 minutes
12.3	50	3 hours 40 minutes	1 hour 50 minutes	1 hour 5 minutes	30 minutes
12.0	25	5 hours 15 minutes	2 hours 40 minutes	1 hours 35 minutes	45 minutes
11.8	0	7 hours	3 hours 30 minutes	2 hours 5 minutes	1 hour 5 minutes

Storage

CAUTION

Turn engine over a few times to be sure there is no oil in the crankcase and that all oil has been pumped back into the oil tank. Stop engine and re-check oil level. Failure to do so can result in engine damage. (00071a)

CAUTION

Do not allow battery to completely discharge. The electrolyte in a discharged battery will freeze. The more discharged a battery is, the more easily it can freeze and crack the battery case. (00218a)

If the motorcycle will not be operated for several months, such as during the winter season, remove the battery from the motorcycle and fully charge.

If the motorcycle is to be stored with the battery installed, it will be necessary to connect a battery tender to maintain charge. See an authorized dealer for more information.

Self-discharge is a normal condition and occurs continuously. The rate of self-discharge depends on the ambient temperature and the battery's state of charge.

- Batteries discharge at a faster rate at higher ambient temperatures.
- To reduce the self-discharge rate, store battery in a cool (not freezing), dry place.
- Charge the battery every month if stored at temperatures below 60° F 16° C .
- Charge the battery more frequently if stored in a warm area above 60° F 16° C .

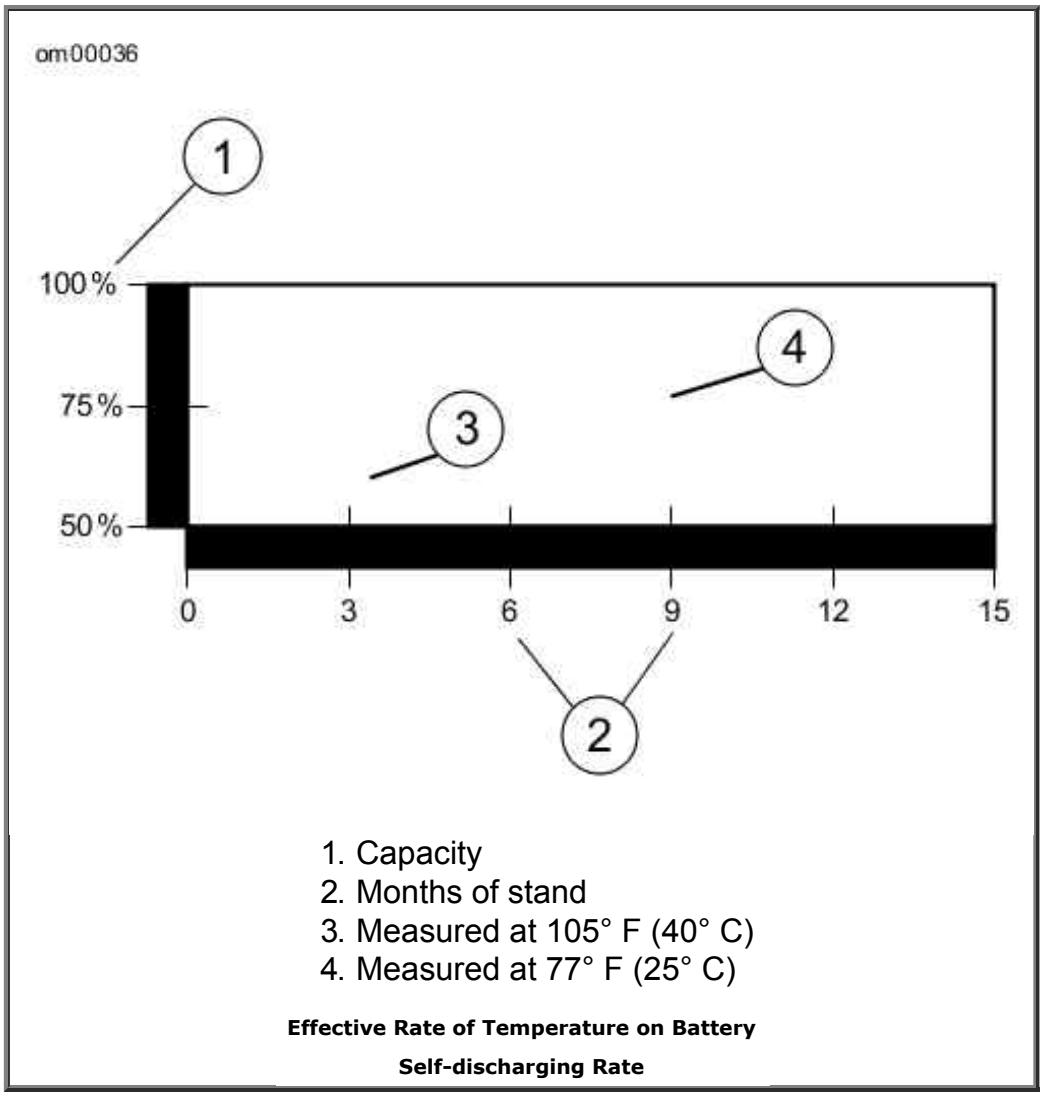

Battery: VRSC Models

Disconnection and Removal

Before you can inspect or disconnect the battery you must read the section containing information about air cleaner removal.

1. Remove the maxi-fuse. See Electrical Protection: VRSC Models.
2. Remove the air cleaner. See Air Cleaner: VRSC Models.
3. See Velocity Stacks. Disconnect rear breather hose (2).
4. Slide the o-ring (4) up each velocity stack (1) body to reveal the three retaining fasteners (5). Unscrew the fasteners and lift off the velocity stacks.
5. Carefully lift up the airbox bottom tray. Two breather hoses are attached to the underside of the airbox bottom tray. The front breather hose is a press-fit on a brass tube and will disconnect. The rear breather hose was disconnected in a previous step.

CAUTION

Cover the throttle body bores with duct tape to prevent

objects from falling down the injector bores. Do NOT use shop cloths or objects that could damage the throttle plates. (00212d)

6. See Covering Injector Intakes. Cover injector intakes.

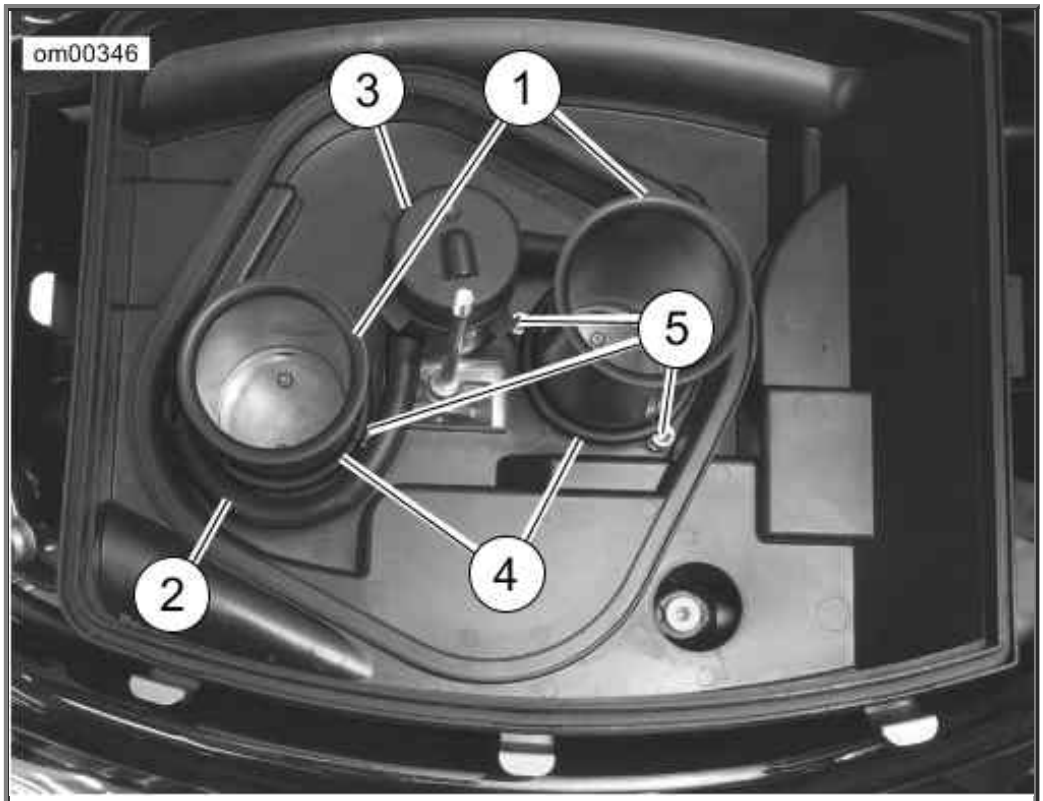

1. Velocity stacks
2. Rear breather hose
3. Air-oil separator
4. O-rings
5. Retaining fasteners (6)

Velocity Stacks

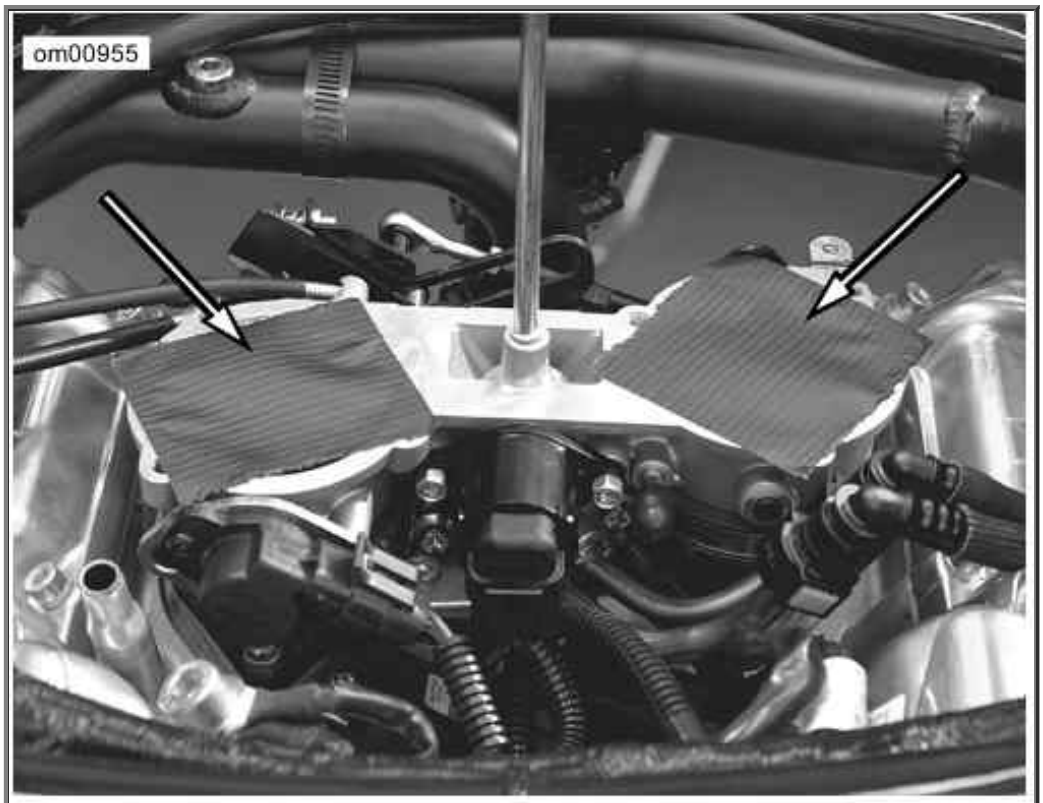

Covering Injector Intakes

⚠WARNING

Disconnect negative (-) battery cable first. If positive (+) cable should contact ground with negative (-) cable connected, the resulting sparks can cause a battery explosion, which could result in death or serious injury. (00049a)

7. See Battery: VRSC Models. Remove the battery negative cable from the negative (-) terminal of the battery.
8. Remove the battery positive cable from the positive (+) terminal of the battery.
9. Stretch battery hold down strap and remove from tab to release tension on strap. Battery hold down strap will become free from lower tab and can be completely removed.
10. Firmly pull battery out and slightly upward to remove battery from battery caddy.

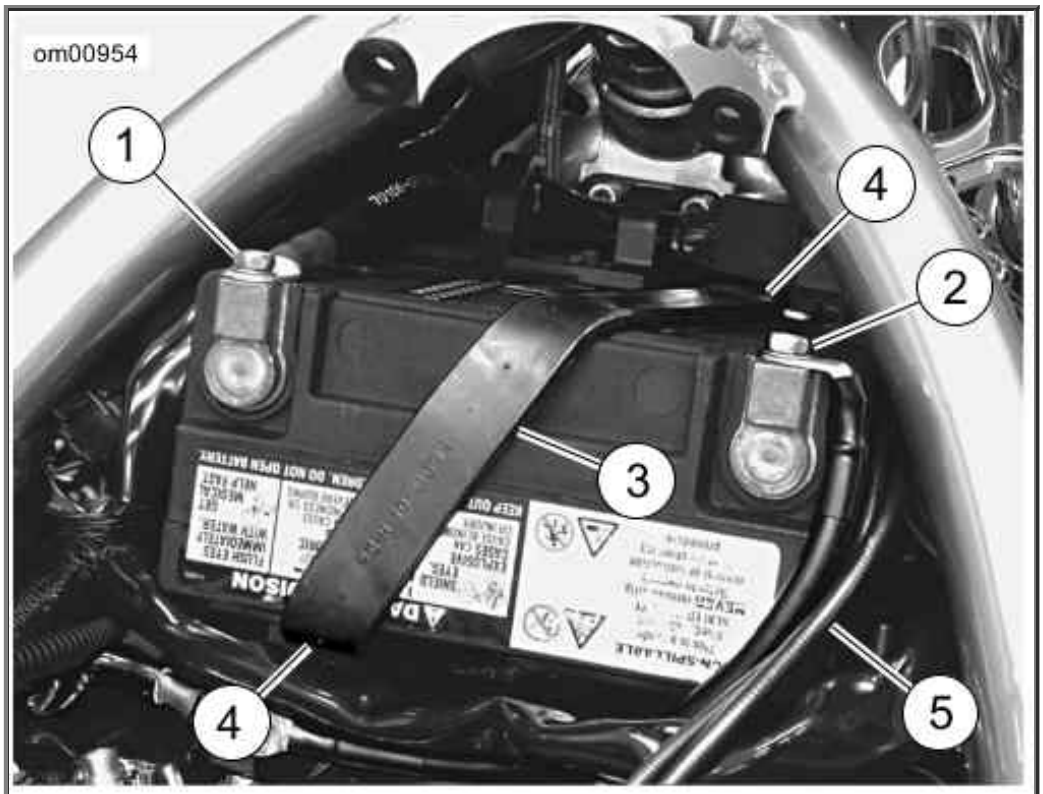

1. Positive battery terminal bolt (shown without boot)
2. Negative battery terminal bolt
3. Hold down strap
4. Tabs
5. Throttle cables

Battery: VRSC Models

Installation and Connection

1. Connect hold down strap to bottom of battery caddy.
2. See Battery: VRSC Models. Slide the fully charged battery into battery caddy, terminal side up, negative (-) battery terminal toward the right side of the motorcycle.

   NOTES:

   Battery must sit flat on bottom of tray pad. Verify that battery does not sit on front edge of pad.
3. See Battery: VRSC Models. Verify proper routing of throttle cable.
4. Stretch hold down strap over top of battery. Latch hold down strap to tab on top of battery.

⚠WARNING

Never route throttle cable over the battery. Fire due to short circuit could occur and cause death or serious injury. (00494c)

CAUTION

Connect the cables to the correct battery terminals. Failure

Connect the cables to the correct battery terminals. Failure to do so could result in damage to the motorcycle electrical system. (00215a)

⚠WARNING

Connect positive (+) battery cable first. If positive (+) cable should contact ground with negative (-) cable connected, the resulting sparks can cause a battery explosion, which could result in death or serious injury. (00068a)

⚠WARNING

Do not allow positive (+) battery cable to contact ground with negative (-) cable connected. Resulting sparks can cause a battery explosion, which could result in death or serious injury. (00069a)

CAUTION

Do not over-tighten bolts on battery terminals. Use recommended torque values. Over-tightening battery terminal bolts could result in damage to battery terminals. (00216a)

5. Insert a battery terminal bolt through the battery positive cable (+) (red), into the threaded hole of the battery positive (+) terminal.
6. Tighten the bolt to 53-89 in-lbs (6-10 Nm).
7. Insert the other battery terminal bolt through the battery negative cable (black), into the threaded hole of the battery negative (-) terminal.
8. Tighten the bolt to 53-89 in-lbs (6-10 Nm).

CAUTION

Keep battery clean and lightly coat terminals with petroleum jelly to prevent corrosion. Failure to do so could result in damage to battery terminals. (00217a)

9. Apply a light coat of petroleum jelly or corrosion retardant material to both battery terminals.
10. Remove the covering from the injector intakes.
11. See Air Cleaner Gasket and Alignment Pins. Inspect the gasket on the bottom of the airbox tray. The gasket is located by the three alignment pins on the mating surface.

    NOTE:

    Replace the gasket if it is torn or damaged in any way.

12. Place the airbox tray over the injectors. Make sure the taller slanted lip of the tray faces the front of the motorcycle. Slide the rectangular hole in the tray down over the threaded mounting stud.

13. See Velocity Stacks. Attach the rear breather hose.

14. Align the front breather hose on the airbox tray with the brass tube and press the airbox tray down firmly. Make sure the tray sits flush on top of the injectors.

    NOTE:

    In the next step, you will install the velocity stacks. Each velocity stack has an index mark. Align the index mark on the velocity stack with the corresponding index mark on the airbox tray.

15. See Air Cleaner Gasket and Alignment Pins. Align the index marks and install the velocity stacks, the longest stack toward the front of the motorcycle. Start all fasteners by hand first, making sure none are cross-threaded. Tighten the three fasteners on each velocity stack to 53 in-lbs (6 Nm).

16. Slide the o-ring down each velocity stack until it contacts the three fasteners. Slide the breather hose onto the rear breather hose fitting.

17. Reinstall the air filter element, air cleaner cap, wing nut and airbox cover. Lower the seat down.

18. Install the maxi-fuse. See Electrical Protection: VRSC Models.

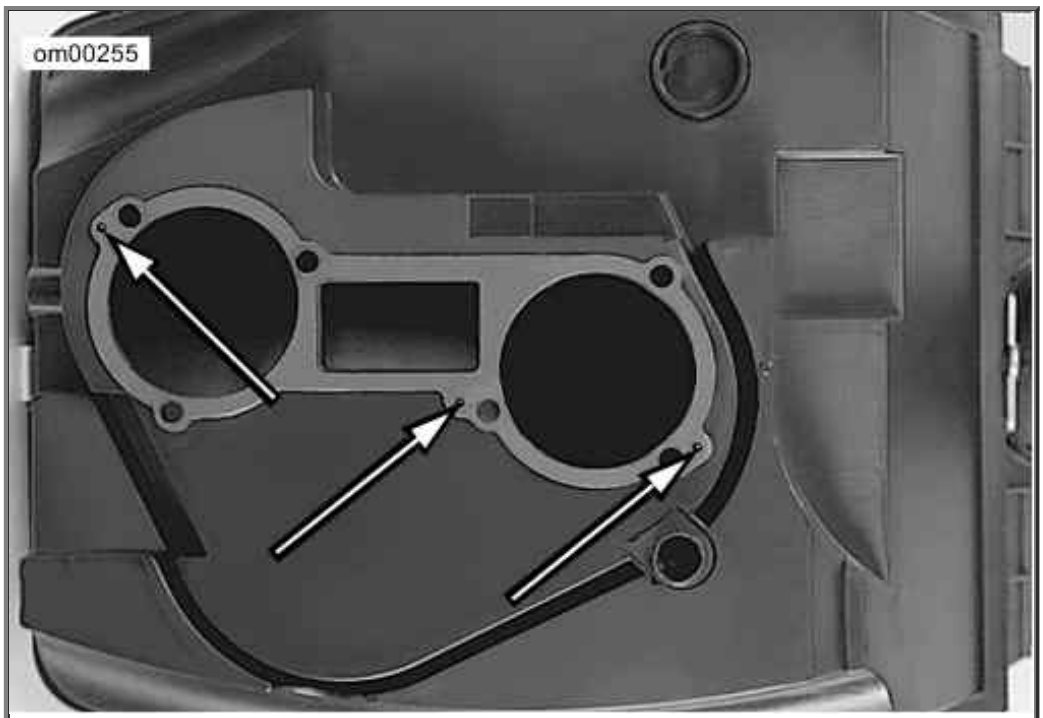

Air Cleaner Gasket and Alignment Pins

1. Velocity stack index mark
2. Airbox tray index mark

Velocity Stack and Airbox Tray Index Marks

Jump Starting

Harley-Davidson does not recommend jump-starting a motorcycle. However, there may be circumstances when it is necessary to do so. Therefore, we suggest jump-starting be performed as follows:

⚠WARNING

Be sure jumper cables touch only appropriate battery terminals or ground. Allowing jumper cables to touch each other can result in sparks and a battery explosion, which could result in death or serious injury. (00072a)

⚠WARNING

Explosive hydrogen gas, which escapes during charging, could cause death or serious injury. Charge battery in a well-ventilated area. Keep open flames, electrical sparks and smoking materials away from battery at all times. KEEP BATTERIES AWAY FROM CHILDREN. (00065a)

CAUTION

Harley-Davidson motorcycles have a 12 Volt battery. Be

sure the booster vehicle has a 12 Volt system. Failure to do so could result in vehicle damage. (00220a)

NOTE:

This procedure presumes the BOOSTER battery is in another vehicle.

1. Turn off all unnecessary lamps and accessories.

Positive Cable

---

2. See Jump Start Cable Connections. Connect one end of a jumper cable to the DISCHARGED battery positive (+) terminal (1).
3. Connect the other end of the same cable to the BOOSTER battery positive (+) terminal (2).

Negative Cable

⚠WARNING

Do not connect negative (-) cable to or near the discharged battery negative (-) terminal. Doing so could cause a spark and explosion, which could result in death or serious injury. (00073a)

4. Connect one end of a jumper cable to the BOOSTER battery negative (-) terminal (3).

CAUTION

Do not connect the negative (-) cable to painted or chrome parts. Doing so could result in discoloration at the attachment point. (00221a)

5. Connect other end of the same cable (4) to a safe ground, (away from the DISCHARGED battery).
6. Start motorcycle.
7. Disconnect cables in reverse order of steps 2, 3, 4, 5. That is: steps 5, 4, 3, 2.

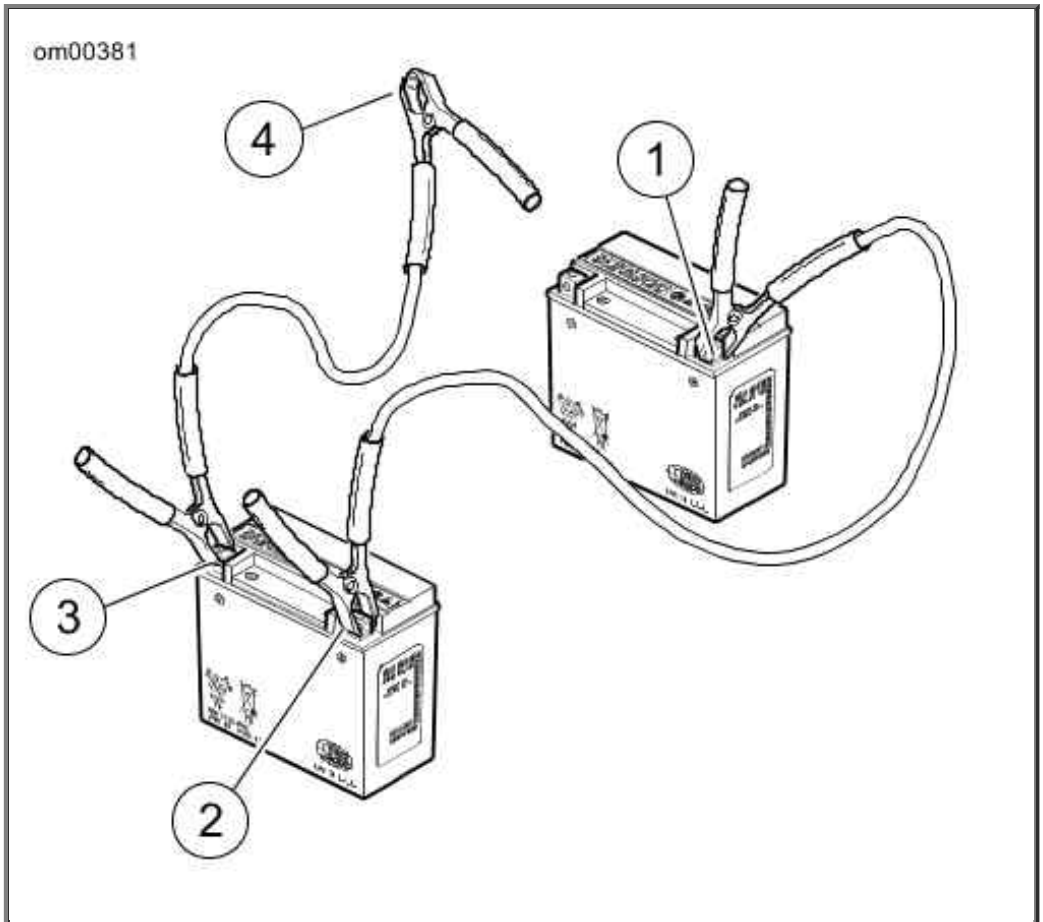

1. Discharged battery positive (+) terminal
2. Booster battery positive (+) terminal
3. Booster battery negative (-) terminal
4. Ground

Jump Start Cable Connections

Electrical Protection: VRSC Models

VRSC models have a rear fuse block under the seat and a front fuse block behind the steering head under the right side cover.

For electrical problems, it is best to see a Harley-Davidson dealer who has the necessary parts and equipment to perform electrical services.

Fuses do not reset. A blown fuse must be replaced with a fuse of the same rating.

NOTE:

Use only automotive type ATO fuses as replacements.

Front Fuse Block

1. Make sure the ignition is turned OFF.
2. See Front Fuse Block and Maxi-Fuse: VRSC Models. Remove the fastener from the front right side cover and carefully lift the side cover off the mounting tabs. The front fuse block is mounted on the top right side of the battery box.
3. Pull the tabs out from the sides of the fuse block cover. Remove cover.

4. See Front Fuse Block: VRSC Models. Remove the suspect fuse and inspect the element. Replace the fuse if the element is burned or broken.

5. Install the fuse block cover. Carefully press the cover until tabs snap into place.

6. Install front side cover on the mounting tabs. Line up the hole on the cover with the threaded hole in the frame tab and install the fastener. Tighten the fastener to 97.2-150 in-lbs (11-17 Nm).

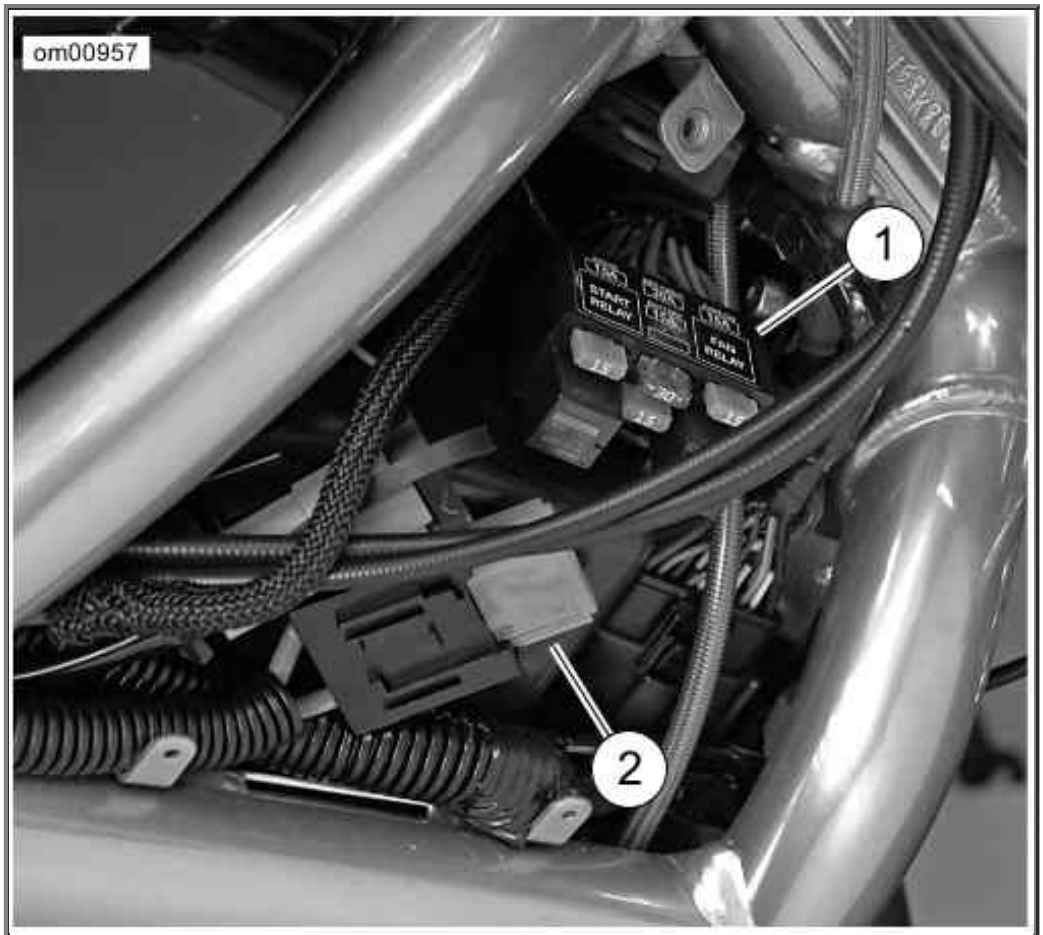

1. Front fuse block (cover removed)
2. Maxi-fuse

Front Fuse Block and Maxi-Fuse: VRSC Models

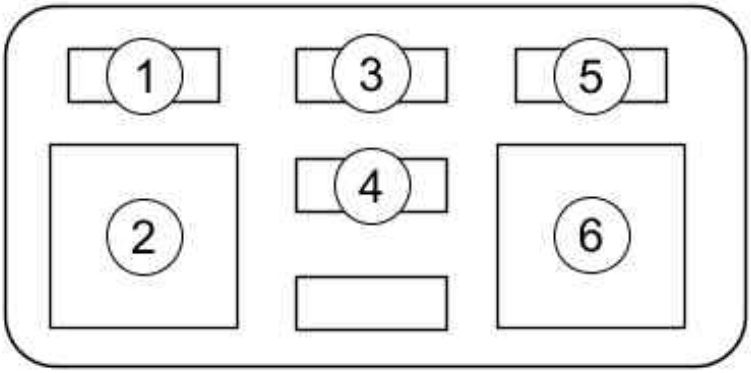

1. Spare (15 amp.)
2. Start relay
3. ABS fuse (ABS-equipped models only, 30 amp.)
4. Battery (15 amp.)
5. Ignition (15 amp.)
6. Fan relay

Front Fuse Block: VRSC Models

Rear Fuse Block

---

1. Make sure the ignition is turned OFF.
2. Open the seat.
3. See Rear Fuse Block Location: VRSC Models. The rear fuse block is located on frame crossmember behind fuel filler cap. Slide the fuse block to the left side of vehicle to remove from mount.
4. See Rear Fuse Block: VRSC Models. Remove the suspect fuse and inspect the element. Replace the fuse if the element is burned or broken.
5. Slide fuse block onto the mount. Close the seat.

Rear Fuse Block Location: VRSC Models

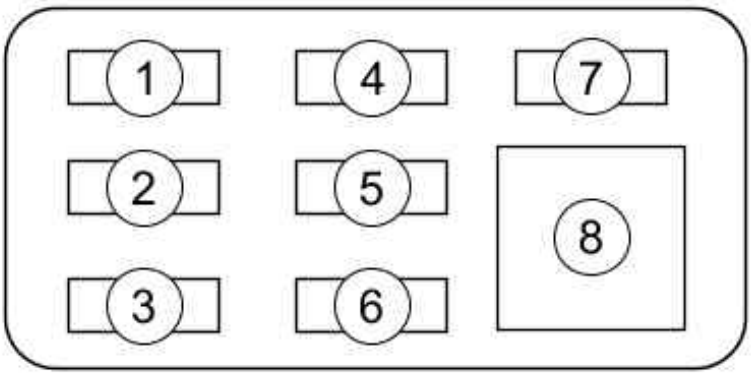

1. Spare (15 amp.)
2. Security (15 amp.)
3. Accessory (15 amp.)
4. P&A Ignition (2 amp. max)
5. Lights (15 amp.)
6. ECM power (15 amp.)
7. Fuel pump (15 amp.)
8. System relay

Rear Fuse Block: VRSC Models

Maxi-Fuse

All VRSC models have a main fuse to protect the motorcycle wiring. This 40-amp maxi-fuse provides main battery power to the motorcycle. It is located in a rubber-coated fuse holder behind the motorcycle's right side cover.

1. See Rear Fuse Block Location: VRSC Models. Remove the fastener, carefully lift the

right side cover off the mounting tabs and set it aside.

2. Grasp the fuse holder in one hand, the plastic body of the maxi-fuse in the other, and pull the maxi-fuse straight out of the fuse holder.

3. Insert the prongs of the **new** maxi-fuse in the fuse holder slots. Push the maxi-fuse firmly down into the fuse holder.

4. Install the side cover on the mounting tabs, line up the hole in the cover with the threaded hole in the frame tab, and install the fastener. Tighten the fastener to 97.2-150 in-lbs (11-17 Nm).

Inserting Maxi-Fuse (Typical)

Seat: VRSC Models

Opening

Seat is hinged on the left side. Grasp lower edge of right side and lift.

NOTE:

See Seat Lanyard: VRSC Models. The lanyard will hold the seat in position on the motorcycle frame.

Closing

Rotate seat down to close seat.

NOTE:

Refer to the VRSC Service Manual for information pertaining to seat installation and removal.

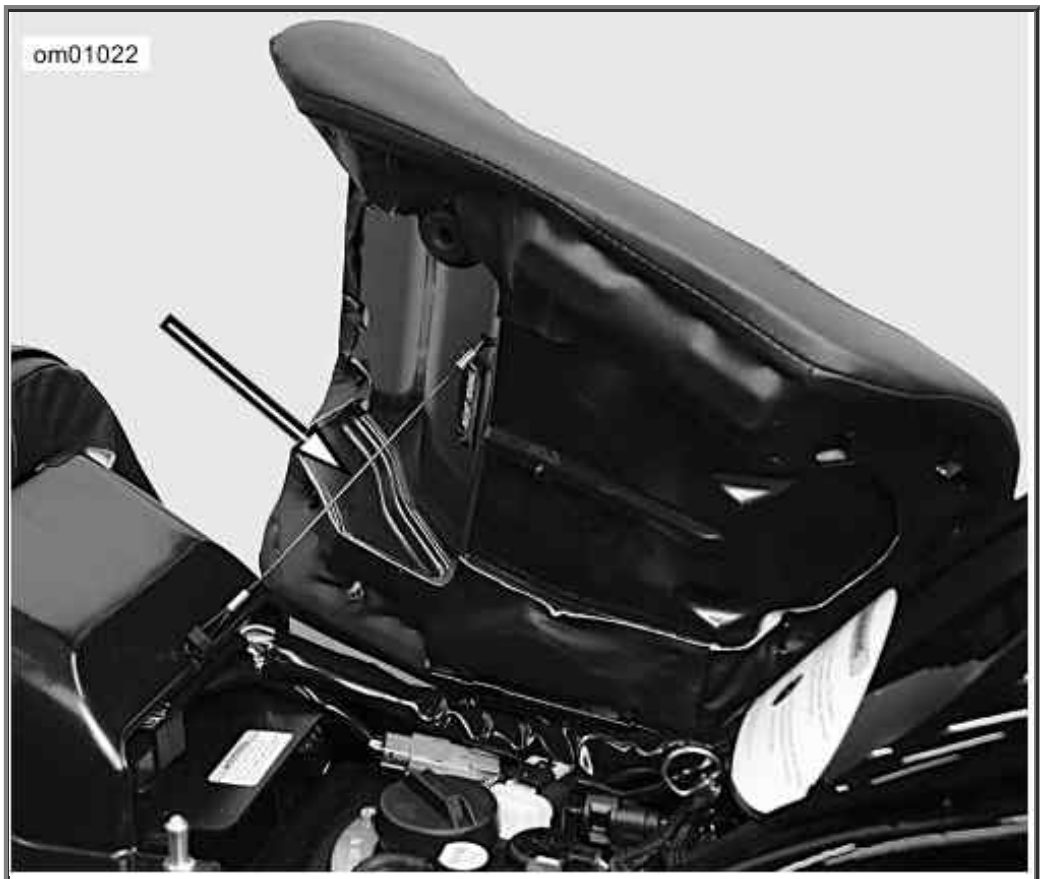

Seat Lanyard: VRSC Models

Motorcycle Storage: VRSC Models

Placing Motorcycle in Storage

CAUTION

Proper storage is important for the trouble-free operation of your motorcycle. See your Owner's Manual for storage recommendations or see a Harley-Davidson dealer. Improper storage procedures can lead to equipment damage. (00046a)

If the motorcycle will not be operated for several months, such as during the winter season, there are several tasks which should be performed. These steps will protect parts against corrosion, preserve the battery and prevent the build-up of gum and varnish in the fuel system.

⚠WARNING

Do not store motorcycle with gasoline in tank within the home or garage where open flames, pilot lights, sparks or electric motors are present. Gasoline is extremely flammable and highly explosive, which could result in death or serious injury. (00003a)

NOTE:

Make a list of everything you do and fasten it to a handgrip. When you take the motorcycle out of storage, this list will be your reference/checklist to get your motorcycle in operating condition.

1. Fill fuel tank and add a gasoline stabilizer. Use one of the commercially available gasoline stabilizers and follow the manufacturer's instructions.

2. Warm motorcycle to operating temperature. Change oil and turn engine over to circulate the new oil.

3. Adjust the belt.

4. Check tire inflation. Adjust to proper inflation pressure.

5. Prepare battery for winter storage. See Battery: General.

⚠WARNING

Explosive hydrogen gas, which escapes during charging, could cause death or serious injury. Charge battery in a well-ventilated area. Keep open flames, electrical sparks and smoking materials away from battery at all times. KEEP BATTERIES AWAY FROM CHILDREN. (00065a)

6. If the motorcycle is to be stored with security system armed, it will be necessary to connect a Battery Tender to maintain battery charge. If security system will not be armed and a Battery Tender is not available, remove the Maxi-fuse.

CAUTION

Use ONLY Genuine Harley-Davidson Extended Life Antifreeze and Coolant. Use of other coolants/mixtures may lead to engine damage. (00179a)

7. Check and fill the cooling system.

8. To protect the vehicle's body panels, engine, chassis and wheels from corrosion, follow the cosmetic care procedures described in the Accessory Maintenance section of this owner's manual prior to storage.

9. If motorcycle is to be covered, use a material such as light canvas that will breathe. Plastic materials that do not breathe promote the formation of condensation.

Removing Motorcycle From Storage

⚠WARNING

The clutch failing to disengage can cause loss of control, which could result in death or serious injury. Prior to starting after extended periods of storage, place transmission in gear and push vehicle back and forth several times to assure proper clutch disengagement. (00075a)

1. See Battery: General for proper battery care. Charge and install the battery.
2. Remove and inspect the spark plugs. Replace if necessary.
3. Clean the air cleaner element.
4. Start the engine and run until it reaches normal operating temperature. Turn off engine.
5. Check the oil.
6. Check the clutch fluid level.
7. Check controls to be sure they are operating properly. Operate the front and rear brakes, throttle, clutch and shifter.
8. Check steering for smoothness by turning the handlebars through the full operating range.

⚠WARNING

Coolant mixture contains toxic chemicals, which may be fatal if swallowed. If swallowed, do not induce vomiting; call a physician immediately. Use in a well ventilated area. Irritation to skin or eyes can occur from vapors or direct contact. In case of skin or eye contact, flush thoroughly with water and go to hospital, if necessary. Dispose of used coolant according to federal, state and local regulations. (00092a)

9. Check the radiator connections and coolant level.

⚠WARNING

Be sure tires are properly inflated, balanced and have adequate tread. Inspect your tires regularly and see a Harley-Davidson dealer for replacements. Riding with excessively worn, unbalanced or under-inflated tires can adversely affect stability and handling, which could result in death or serious injury. (00014a)

10. Check tire pressure. Incorrect pressure will result in poor riding characteristics and can affect handling and stability.
11. Check all electrical equipment and switches including the stop lamp, turn signals and horn for proper operation.
12. Check for any fuel, oil, coolant or brake fluid leaks.

CAUTION

Turn engine over a few times to be sure there is no oil in the crankcase and that all oil has been pumped back into the oil tank. Stop engine and re-check oil level. Failure to

do so can result in engine damage. (00071a)

Accessories Maintenance

General Maintenance

Maintain chrome and aluminum regularly to check that they retain their original shine and luster. Take care to keep your new Harley-Davidson motorcycle cleaned and waxed as often as possible to inhibit rust and corrosion.

Denim Finish

General

If your vehicle has flat (or matte) finish please read below.

- The Denim finish has qualities which differ from high gloss finishes on all other Harley-Davidson motorcycles. Like denim fabric, Denim paint will burnish or mar with age and use, thus adding character and personality to the finish of the motorcycle.
- If scratched, the color coat of paint does nick/scuff and these marks can not be rubbed out.
- If polished, the finish will become less matte and more glossy over time.

How to Clean

1. For heavier deposits:

    a. Use grease cutting dishwashing detergent and a clean H-D wash-mitt. (Dilute the detergent per the instruction provided by its manufacturer.)

    b. Rinse thoroughly with clean water.

2. For light deposits, use glass cleaner (ammonia base) and H-D Soft Cloth. This helps remove finger prints and light soil.

3. For final detailing use H-D Gloss with H-D Soft Cloth.

Cleaning Your V-Rod

CAUTION

Improper cleaning, or the use of non-recommended care products, or lack of proper maintenance of your VRSC will void your cosmetic warranty coverage. (00226a)

⚠WARNING

Observe warnings on labels of cleaning compounds. Failure to follow warnings could result in death or serious

injury. (00076a)

To aid you in keeping your motorcycle clean, see a Harley-Davidson dealer for cleaning and polishing products. As a general guideline, it is recommended that you use the following products for the purposes listed in Recommended Cleaning Care Products.

Recommended Cleaning Care Products

PRODUCT	PART NUMBER	FRAME	BODY PANELS	WHEELS	DENIM FINISH
H-D Sunwash	94659-98	Yes	Yes	Yes	No
H-D Bug Remover	94657-98	Yes	Yes	Yes	No
Harley-Gloss	94627-98	Yes	Yes	Yes	Yes
Harley Spray Cleaner and Polish	99817-99	Yes	Yes	Yes	No
Wheel and Tire Cleaner	94658-98	No	No	Yes	No
S100 Total Cycle Cleaner (complete rinse required)	99760-85T	Yes	Yes	Yes	No
Grease cutting dishwasher detergent. Dilute per manufacturer's instructions.	N/A	No	No	No	Yes
Ammonia base glass cleaner	N/A	No	No	No	Yes

1. Use H-D SUNWASH 94659-98 first, for general cleaning and washing of all surface finishes. Sunwash has a formulated sheeting action that prevents hard water spots and rinses clean even on hot days in the sun.

CAUTION

Use of pressure washers to clean radiator and oil cooler can damage cooling fins and reduce airflow. Reduced airflow can lead to overheating, resulting in engine damage and could void your engine warranty. (00056a)

CAUTION

Do not use pressure washers to clean wheel bearings, sprocket bearings, steering head bearings and swingarm pivot bearings. Doing so can result in equipment damage. (00489b)

2. Next, use H-D BUG REMOVER 94657-98 to remove bugs from all surface finishes. Bug Remover will not damage metal, plastic or painted surfaces.

3. Finally, use HARLEY GLOSS 94627-98 as an all-purpose surface protectant that provides UV protection and a gloss finish. Harley Gloss contains no waxes, silicones, oils or hydrocarbon solvents.

4. Use HARLEY SPRAY CLEANER AND POLISH 99817-99 for quick touch-ups. It's an all-

purpose aerosol cleaner and quick detailer, great for all metal surfaces. This product also reduces static attraction to dust.

5. Use WHEEL AND TIRE CLEANER 94658-98 to clean and degrease wheels and tires. Do not use on frame or anodized parts.

CAUTION

We recommend use of the products listed above. If you wish to use non-recommended cleaning products, test them only in an inconspicuous area on the vehicle's surface first. Do NOT use abrasive or etching cleaners on anodized surfaces! Doing so can result in damage to the surface. (00227a)

CAUTION

Use ONLY Harley Spray Cleaner and Polish, or Harley Gloss on painted surfaces. Use of other cleaners or polishes can damage painted surfaces. (00228a)

NOTE:

See a Harley-Davidson dealer for repair, restoration, or customization of anodized or painted surfaces.

⚠WARNING

Observe warnings on labels of cleaning compounds. Failure to follow warnings could result in death or serious injury. (00076a)

⚠CAUTION

Cooling fans operate automatically, even when the ignition switch is off. Keep hands away from fan blades. Contact with a rotating fan blade can result in minor or moderate injury. (00093a)

CAUTION

Clean the front surface of the radiator regularly. Leaves and other debris can collect on the radiator surface and degrade radiator performance which could lead to engine overheating and engine damage. (00197b)

Leather Care

NOTE:

Many Harley-Davidson accessories and seats are either made of leather or have leather inserts.

Natural materials age differently and require different care than man-made materials. Seat covers and panels made of leather will gain "character", such as wrinkles, with age. Leather is porous and organic and each leather product will settle into its own distinct form with use. Your leather product will mature into its own custom shape and style from the sun, rain and the miles. This maturing is natural and will enhance the custom quality of your Harley-Davidson motorcycle.

Leather must be periodically cleaned and treated to maintain its appearance and extend its life. Clean and treat leather once a season or more frequently under adverse conditions.

CAUTION

Do not use bleach or detergents containing bleach on saddlebags, seats, tank panels or painted surfaces. Doing so can result in equipment damage. (00229a)

- Do not use ordinary soap to clean leather or fur. It could dry or remove the oils from the leather.
- Use ONLY a good quality saddle soap to clean leather. Be sure you rinse saddle soap off thoroughly before treating leather.
- Never try to dry leather quickly, using artificial means. Always let leather dry naturally, at room temperature.

1. Vacuum or blow dust off.
2. Thoroughly clean leather with a good quality saddle soap, following manufacturer's directions. Rinse thoroughly with clean sponge or cloth and water. Allow leather to dry.
3. Once leather is dry, treat with a good quality leather treatment, such as LEATHERCARE (Part No. 98261-91).
4. Always allow leather to dry completely before using.

Wheel Care: VRSC Models

The vehicle's wheels are cast aluminum. Damage from harsh chemicals, acid based wheel cleaners, brake dust and lack of maintenance can occur. Regular washing and the use of a corrosion protectant will help to maintain their original appearance. Harley-Davidson Wheel & Tire Cleaner 94658-98 is recommended for cleaning wheels and tires. Then use Harley Gloss 94627-98 to protect the aluminum wheel surfaces.

NOTES:

- *Follow recommended service procedures for your tire if applicable.*
- *It is imperative that the wheels are cared for weekly, according to the instructions above, to guard against pitting and corrosion.*
- *Corrosion of these components is not considered to be a defect in materials or workmanship.*

See a Harley-Davidson dealer for cleaning and polishing products.

Windshields

CAUTION

Harley-Davidson windshields are made of Lexan. Lexan is a more durable and distortion-resistant material than other types of motorcycle windshield material, but still requires attention and care to maintain. Failure to maintain Lexan properly can result in damage to the windshield. (00230a)

CAUTION

Do not use harsh chemicals including rain sheeting products on Harley-Davidson windshields. They can cause dulling or hazing. If you want to use a windshield protectant on your windshield, try Harley Glaze Polish and Sealant (00231a)

CAUTION

Do not use benzine, paint thinner, gasoline or any other type of harsh cleaner on the windshield. Doing so will damage the windshield surface. (00232a)

NOTES:

- *To remove minor surface scratches use NOVUS® No. 2 SCRATCH REMOVER (Part No. 99836-94T).*
- *Covering the windshield with a clean, wet cloth for approximately 15-20 minutes before washing will make dried bug removal easier.*

1. Use mild soap and warm water to wash the windshield.
2. Wipe dry with a soft, clean towel.

NOTE:

To treat your Lexan windshield with water repellent use WINDSHIELD WATER REPELLENT TREATMENT (Part No. 99841-02).

Troubleshooting

Troubleshooting: General

⚠WARNING

The troubleshooting section of the Owner's Manual is a guide to diagnose problems. Read the service manual before performing any work. Improper repair and/or maintenance could result in death or serious injury. (00080a)

The following checklist of possible operating troubles and their probable causes will be helpful in keeping your motorcycle in good operating condition. More than one of these conditions may be causing trouble and should be carefully checked.

Starter Does Not Operate or Does Not Turn Engine Over

1. Engine run switch in OFF position.
2. Ignition switch not ON.
3. Discharged battery or loose or corroded connections (solenoid chatters).
4. Clutch lever not squeezed against handlebar or transmission not in neutral.
5. Jiffy stand not in retracted position (required for international models only).
6. Blown fuse.

Engine Turns Over But Does Not Start

1. Fuel tank empty.
2. Fuel vacuum line disconnected.
3. Fuel valve or filter clogged.
4. Discharged battery or loose or broken battery terminal connections.
5. Fouled spark plugs.
6. Spark plug coil connections loose or in bad condition and shorting.
7. Loose or corroded wire or cable connection(s) at coil or battery.
8. Fuel pump inoperative.
9. Blown fuse.

Starts Hard

1. Spark plugs in bad condition, have improper gap, or are partially fouled.
2. Battery nearly discharged.
3. Loose wire or cable connection(s) at one of the battery terminals or at coil.
4. Engine oil too heavy (winter operation).
5. Fuel tank vent plugged or fuel line closed off, restricting fuel flow.
6. Water or dirt in fuel system.
7. Fuel pump inoperative.

Starts But Runs Irregularly or Misses

1. Spark plugs in bad condition or partially fouled.
2. Spark plug gap too close or too wide.
3. Battery nearly discharged.
4. Damaged wire or loose connection at battery terminals or coils.
5. Intermittent short circuit due to damaged wire insulation.
6. Water or dirt in fuel system, filter or carburetor.
7. Fuel vent system plugged. See dealer.
8. One or more injectors fouled.

A Spark Plug Fouls Repeatedly

1. Incorrect spark plug.

Pre-ignition or Detonation (Knocks or Pings)

1. Incorrect fuel.
2. Incorrect spark plug for the kind of service.

Overheats

1. Insufficient oil supply or oil not circulating.
2. Heavy carbon deposit from lugging engine. See dealer.

Excessive Vibration

1. Rear fork pivot shaft nuts loose. See dealer.
2. Front engine mounting bolts loose. See dealer.
3. Broken frame. See dealer.
4. Belt badly worn.
5. Wheels and/or tires damaged. See dealer.
6. Vehicle not properly aligned. See dealer.

Cooling System

Overheats

1. Air flow through the radiator is obstructed.
2. The radiator is internally plugged.
3. Insufficient coolant.
4. Cooling fans not operating.

Electrical System

Alternator Does Not Charge

1. Module not grounded. See dealer.
2. Engine ground wire loose or broken. See dealer.
3. Loose or broken wires in charging circuit. See dealer.

Alternator Charge Rate is Below Normal

1. Weak battery.
2. Excessive use of add-on accessories.
3. Loose or corroded connections.
4. Extensive periods of idling or low speed riding.

Transmission: VRSC Models

Transmission Shifts Hard

1. Bent shifter rod. See dealer.
2. Transmission shifting mechanism needs adjustment. See dealer.

Transmission Jumps Out of Gear

1. Shifter rod improperly adjusted. See dealer.
2. Shifter forks (inside transmission) improperly adjusted. See dealer.
3. Worn shifter dogs in transmission. See dealer.

Clutch Slips

1. Clutch controls improperly adjusted. See dealer.
2. Worn friction discs. See dealer.
3. Insufficient clutch spring tension. See dealer.

Clutch Drags or Does Not Release

1. Clutch controls improperly adjusted. See dealer.
2. Insufficient clutch spring tension. See dealer.
3. Clutch discs warped. See dealer.

Clutch Chatters

1. Friction discs or steel discs worn or warped. See dealer.

Brakes

ABS System Behavior

1. ABS lamp does not shut off above 3 mph 5 km/h . See dealer.
2. Other ABS symptoms. Refer to ABS Symptoms and Conditions.

Brakes Do Not Hold Normally

1. Master cylinder low on fluid. See dealer.
2. Brake line contains air bubbles. See dealer.
3. Master or wheel cylinder piston worn. See dealer.
4. Brake pads contaminated with grease or oil. See dealer.
5. Brake pads badly worn. See dealer.
6. Brake disc badly worn or warped. See dealer.
7. Brake fades because of heat build up. Excessive braking or brake pads dragging. See dealer.
8. Brake drags. Insufficient hand lever free play. See dealer.

Warranties and Responsibilities

Warranty and Maintenance

This Owner's Manual contains your new motorcycle warranty.

It is the owner's responsibility to follow the scheduled mileage intervals as specified; all of the specified maintenance services must be performed to keep your warranty valid.

1. Make an appointment with a Harley-Davidson dealer for inspection and service just before you have ridden 1000 miles 1600 kilometers .
2. Bring this Owner's Manual with you when you visit your dealer to have your motorcycle inspected and serviced.
3. Have the dealer technician sign at the proper mileage interval. The records should be retained by the owner as proof of proper maintenance.
4. Keep receipts covering any parts, service or maintenance performed. These records should be transferred to each subsequent owner.

⚠WARNING

Do not use aftermarket parts and custom made front forks which can adversely affect performance and handling. Removing or altering factory installed parts can adversely affect performance and could result in death or serious injury. (00001a)

Harley-Davidson dealerships are independently owned and operated and may sell parts and accessories that are not manufactured or approved by Harley-Davidson. Therefore, you should understand that we are not and cannot be responsible for the quality, suitability, or safety of any non-Harley-Davidson part, accessory or design modification, including labor, which may be sold and/or installed by our dealers.

Keeping It All Harley-Davidson

---

1. Keep your Harley-Davidson completely Harley-Davidson.
2. Insist that your dealer uses only Genuine replacement parts to keep your Harley-Davidson motorcycle and its warranty intact.

Exacting design and stringent testing ensure performance and warranty coverage. Again, insist on Genuine parts for your genuine Harley-Davidson motorcycle.

NOTE:

Installing off-road or competition parts to enhance performance may void all or part of your new motorcycle warranty. See the Harley-Davidson Limited Warranty in this manual or a Harley-Davidson dealer for details.

CAUTION

It is possible to overload your motorcycle's charging system by adding too many electrical accessories. If your combined electrical accessories operating at any one time consume more electrical current than your vehicle's charging system can produce, the electrical consumption

can discharge the battery and cause vehicle electrical system damage. See a Harley-Davidson dealer for advice about the amount of current consumed by additional electrical accessories, or for necessary wiring changes. (00211b)

Important Moving Information

If you move from your present address, or sell your motorcycle, please fill out and mail the post card at the back of this manual. This is necessary in the event that the Company needs to contact the owner concerning information that could affect the safe operation of this motorcycle.

California Evaporative Emission Controls: 2008 Models

All new model year 2008 Harley-Davidson motorcycles sold in the State of California are equipped with an evaporative emission control system. This system is designed to meet the CARB regulations in effect at the time of manufacture.

The system requires a small amount of maintenance. Periodic inspection is required to make sure hoses are properly routed, not kinked or blocked and that all fittings are secure. Mounting hardware should also be checked periodically for tightness.

EPA Noise Regulations in the United States

EPA noise regulations require that the following statements be included in the Owner's Manual.

TAMPERING WITH NOISE CONTROL SYSTEM PROHIBITED: Federal law prohibits the following acts or the causing thereof: (1) The removal or rendering inoperative by any person other than for purposes of maintenance, repair, or replacement of any device or element of design incorporated into any new vehicle for the purpose of noise control prior to its sale or delivery to the ultimate purchaser or while it is in use, or (2) the use of the vehicle after such device or element of design has been removed or rendered inoperative by any person.

AMONG THOSE ACTS PRESUMED TO CONSTITUTE TAMPERING ARE THE ACTS LISTED BELOW.

1. Replacing the muffler(s) and/or the entire exhaust system with parts not certified to be noise legal for street use.
2. Removing or modifying the muffler internal baffles in any way.
3. Replacing the air intake/cleaner assembly with one not certified to be noise legal for street use.
4. Modifying the air intake/cleaner assembly in such a way as to make the vehicle no longer noise legal for street use.

Harley-Davidson recommends that any and all noise related maintenance be done by an authorized Harley-Davidson dealer using genuine Harley-Davidson parts.

Warranty/Service Information

Any authorized Harley-Davidson dealer is responsible for providing the warranty repair work on

your motorcycle. If you have any questions regarding warranty obligations contact your selling dealer.

For normal service work or warranty work under the above conditions, you may obtain the name and location of your nearest U.S. Harley-Davidson dealer by calling 1-800-490-9635 (toll free), in any state except Alaska and Hawaii.

NOTE:

The number shown above is accessible only with a touch-tone phone in the United States.

Reporting Safety Defects in United States

Safety defects must be reported to the National Highway Traffic Safety Administration (NHTSA) and Harley-Davidson.

NHTSA Statement

If you believe that your vehicle has a defect which could cause a crash or could cause injury or death, you should immediately inform the National Highway Traffic Safety Administration (NHTSA) in addition to notifying Harley-Davidson.

If NHTSA receives similar complaints, it may open an investigation, and if it finds that a safety defect exists in a group of vehicles, it may order a recall and remedy campaign. However, NHTSA cannot become involved in individual problems between you, your dealer, or Harley-Davidson.

To contact NHTSA, refer to NHTSA Contacts.

NHTSA Contacts

ITEM	DATA
Phone	Call the Auto Safety Hot Line toll-free at 1-888-DASH-2DOT
Mail	U.S. Department of Transportation, National Highway Traffic Safety Administration, Office of Defects Investigation, NVS-210, 400 7th Street S.W., Washington, D.C. 20590
Web site	www.nhtsa.dot.gov

You can also obtain other information about motor vehicle safety from the hot line.

Owner Transfer Identification Form

When purchasing a pre-owned Harley-Davidson or Buell, we encourage you to submit an Owner Transfer Notification Form. It is critical that new owner information is communicated to Harley-Davidson. New owner information is required to be on file with Harley-Davidson to transfer an Extended Service Plan Contract. Harley-Davidson is also required by the National Traffic and Motor Vehicle Safety Act to notify all owners in the event of a recall. The form may be obtained at any Harley-Davidson dealer.

Required Documentation for Imported Motorcycles

If a Harley-Davidson is imported into the United States, additional documentation is required to be eligible for the United States Manufacturer's Limited Warranty. A Harley-Davidson dealer can provide a form explaining the requirements.

Limited Motorcycle Warranty

2008 HARLEY-DAVIDSON MOTORCYCLE LIMITED WARRANTY

24 Months/Unlimited Miles

Harley-Davidson warrants for any new 2008 Harley-Davidson motorcycle/sidecar that an authorized Harley-Davidson dealer will repair or replace without charge any parts found under normal use to be defective in factory materials or workmanship. Such repair and replacement will be Harley-Davidson's sole obligation and the customer's sole remedy under this warranty.

THERE IS NO OTHER EXPRESS WARRANTY (OTHER THAN THE SEPARATE EMISSIONS AND NOISE WARRANTIES) ON THE MOTORCYCLE. ANY IMPLIED WARRANTY OF MERCHANTABILITY OR FITNESS FOR PARTICULAR PURPOSE IS LIMITED TO THE DURATION OF THIS WARRANTY.

Some states do not allow limitations on how long an implied warranty lasts, so the above limitation may not apply to you.

TO THE FULLEST EXTENT ALLOWED BY LAW, HARLEY-DAVIDSON AND ITS DEALERS SHALL NOT BE LIABLE FOR LOSS OF USE, INCONVENIENCE, LOST TIME, COMMERCIAL LOSS OR OTHER INCIDENTAL OR CONSEQUENTIAL DAMAGES. Some states do not allow the exclusion or limitation of incidental or consequential damages, so the above limitation or exclusion may not apply to you. This warranty gives you specific legal rights, and you may have other rights which vary from state to state.

The following terms and conditions apply to this warranty:

Duration

1. The duration of this limited warranty is twenty four months, starting from the earlier of (a) the date of initial retail purchase and delivery from an authorized Harley-Davidson dealer, or (b) the third anniversary of the last day of the model year of the motorcycle/sidecar. Your dealer will submit an electronic Sales and Warranty Registration form to initiate your warranty.

2. Any unexpired portion of this limited warranty will be transferred to subsequent owners, upon the resale of the motorcycle/sidecar during the warranty period.

Owner's Obligations

To obtain warranty service, return your motorcycle/sidecar at your expense within the warranty period to an authorized dealer. Our dealer should be able to provide warranty service during normal business hours and as soon as possible, depending upon the workload of the dealer's

service department and the availability of necessary parts.

Harley-Davidson Motor Company, P.O. Box 653, Milwaukee, Wisconsin 53201, U.S.A.

Exclusions

This warranty will not apply to any motorcycle/sidecar as follows:

1. Which has not been operated or maintained as specified in the Owner's Manual.
2. Which has been abused, misused, improperly stored, used "off the highway," or used for racing or competition of any kind.
3. Which is not manufactured to comply with the laws of the market in which it is registered.
4. Installing off-road or competition parts to enhance performance may void all or part of your new motorcycle warranty. See a Harley-Davidson dealer for details.

Other Limitations

This warranty does not cover:

1. Parts and labor for normal maintenance as recommended in the Owner's Manual, or the replacement of parts due to normal wear and tear including such items as the following: tires, lubrication, oil and filter change, fuel system cleaning, battery maintenance, engine tune-up, spark plugs, brake, clutch and chain/belt adjustment (including chain replacement).
2. Cosmetic concerns that arise as a result of owner abuse, lack of proper maintenance or environmental conditions (except concerns that result from defects in material or workmanship, which are covered by this warranty for the duration of the warranty period).
3. Any cosmetic condition existing at the time of retail delivery that has not been documented by the selling dealer prior to retail delivery.
4. Defects or damage to the motorcycle caused by alterations outside of Harley-Davidson factory specifications.

Important: Read Carefully

1. Our dealers are independently owned and operated and may sell other products. Because of this, HARLEY-DAVIDSON IS NOT RESPONSIBLE FOR THE SAFETY, QUALITY, OR SUITABILITY OF ANY NON-HARLEY-DAVIDSON PART, ACCESSORY OR DESIGN MODIFICATION INCLUDING LABOR WHICH MAY BE SOLD AND/OR INSTALLED BY OUR DEALERS.
2. This warranty is a contract between you and the manufacturer. It is separate and apart from any warranty you may receive or purchase from the dealer. The dealer is not authorized to alter, modify, or in any way change the terms and conditions of this warranty.
3. Any warranty work or parts replacement authorized by the manufacturer will not preclude the manufacturer from later relying on any exclusion where applicable.

Limited Noise Warranty

2008 HARLEY-DAVIDSON MOTORCYCLE NOISE CONTROL SYSTEM LIMITED WARRANTY

The following warranty applies to the noise control system, is in addition to the MOTORCYCLE LIMITED WARRANTY and EMISSION CONTROL SYSTEM LIMITED WARRANTY, and applies only to motorcycles sold in the U.S.

Harley-Davidson Motor Company warrants that this vehicle is designed and built so as to conform at the time of sale with applicable regulations of the U.S. Environmental Protection Agency (as tested following F-76 Drive-By test procedure) and that it is free from defects in materials and workmanship which would cause this motorcycle not to meet U.S. Environmental Protection Agency Standards within 1 year or 3,730 miles (6,000 kilometers) whichever expires first. Any unexpired portion of this limited warranty will be transferred to subsequent owners, upon the resale of the motorcycle during the warranty period.

THERE IS NO OTHER EXPRESS WARRANTY (OTHER THAN THE SEPARATE MOTORCYCLE AND EMISSIONS WARRANTIES) ON THE MOTORCYCLE. ANY IMPLIED WARRANTY OF MERCHANTABILITY OR FITNESS FOR PARTICULAR PURPOSE IS LIMITED TO THE DURATION OF THIS WARRANTY.

Some states do not allow limitations on how long an implied warranty lasts, so the above limitation may not apply to you.

The warranty period shall begin on the date the motorcycle is delivered to the first retail purchaser or, if the motorcycle is placed in service as a demonstrator or company vehicle prior to sale at retail, on the date it is first placed in service.

THE FOLLOWING ITEMS ARE NOT COVERED BY THE NOISE CONTROL SYSTEM WARRANTY

1. Failures which arise as a result of misuse, alterations, or accident as specified in the Owner's Manual.

2. Replacing, removing, or modifying any portion of the NOISE CONTROL SYSTEM (consisting of the exhaust system and air intake/cleaner assembly) with parts not certified to be legal for street use.

3. Any motorcycle on which the odometer mileage has been changed so that the mileage cannot be determined.

4. TO THE FULLEST EXTENT ALLOWED BY LAW, HARLEY-DAVIDSON AND ITS DEALERS SHALL NOT BE LIABLE FOR LOSS OF USE, INCONVENIENCE, LOST TIME, COMMERCIAL LOSS OR OTHER INCIDENTAL OR CONSEQUENTIAL DAMAGES.

Some states do not allow the exclusion or limitation of incidental or consequential damages, so the above limitation or exclusion may not apply to you.

Other Rights

This warranty gives you specific legal rights, and you may have other rights which vary from state to state.

Recommendations for Required Maintenance

It is recommended that any noise system maintenance be performed by an authorized Harley-Davidson dealer using genuine Harley-Davidson replacement parts. The maintenance, replacement or repair of the noise control system may be performed by any other qualified service outlet or individual. Non-genuine parts may be used only if such parts are certified to comply with U.S. Environmental Protection Agency Standards.

Harley-Davidson Motor Company, P.O. Box 653, Milwaukee, Wisconsin 53201, U.S.A.

Limited Emission Warranty

2008 HARLEY-DAVIDSON EMISSION CONTROL SYSTEM LIMITED WARRANTY

The following warranty applies to the emission control system, is in addition to the LIMITED MOTORCYCLE WARRANTY and NOISE CONTROL SYSTEM LIMITED WARRANTY, and applies only to motorcycles sold in the U.S.

Harley-Davidson Motor Company warrants that this vehicle is designed and built so as to conform at the time of sale with applicable regulations of the U.S. Federal Environmental Protection Agency, and that it is free from defects in materials and workmanship which would cause this motorcycle not to meet U.S. Environmental Protection Agency Standards within 5 years or 18,641 miles (30,000 kilometers) whichever expires first. Any unexpired portion of this limited warranty will be transferred to subsequent owners, upon the resale of the motorcycle during the warranty period.

THERE IS NO OTHER EXPRESS WARRANTY (OTHER THAN THE SEPARATE MOTORCYCLE AND NOISE WARRANTIES) ON THE MOTORCYCLE. ANY IMPLIED WARRANTY OF MERCHANTABILITY OR FITNESS FOR PARTICULAR PURPOSE IS LIMITED TO THE DURATION OF THIS WARRANTY.

Some states do not allow limitations on how long an implied warranty lasts, so the above limitation may not apply to you.

The warranty period shall begin on the date the motorcycle is delivered to the first retail purchaser or, if the motorcycle is placed in service as a demonstrator or company vehicle prior to sale at retail, on the date it is first placed in service.

THE FOLLOWING ITEMS ARE NOT COVERED BY THE EMISSION CONTROL SYSTEM WARRANTY

1. Failures which arise as a result of misuse, alterations, accident or non-performance of maintenance as specified in the Owner's Manual.

2. The replacement of parts (such as spark plugs, fuel and oil filters, etc.) used in required maintenance.

3. Any motorcycle on which the odometer mileage has been changed so that the mileage cannot be determined.

4. TO THE FULLEST EXTENT ALLOWED BY LAW, HARLEY-DAVIDSON AND ITS DEALERS SHALL NOT BE LIABLE FOR LOSS OF USE, INCONVENIENCE, LOST TIME, COMMERCIAL LOSS OR OTHER INCIDENTAL OR CONSEQUENTIAL DAMAGES.

Some states do not allow the exclusion or limitation of incidental or consequential damages, so the above limitation or exclusion may not apply to you.

Other Rights

This warranty gives you specific legal rights, and you may have other rights which vary from state to state.

Recommendations for Required Maintenance

It is recommended that any emission system maintenance be performed by an authorized Harley-Davidson dealer using genuine Harley-Davidson replacement parts. The maintenance, replacement or repair of the emissions control system may be performed by any other qualified service outlet or individual. Non-genuine parts may be used only if such parts are certified to comply with U.S. Environmental Protection Agency Standards.

Harley-Davidson Motor Company, P.O. Box 653, Milwaukee, Wisconsin 53201, U.S.A.

Maintenance Scheduling

Regular Service Intervals

Regular lubrication and maintenance will help keep your new Harley-Davidson operating at peak performance. Your Harley-Davidson dealer knows best how to service your motorcycle with factory approved methods and equipment assuring you of thorough and competent workmanship.

NOTES:

- *Refer to Regular Service Intervals: 2008 VRSC Models. Regular maintenance interval operations are required to keep your new motorcycle warranty in force. The use of other than Harley-Davidson approved parts and service procedures may void the warranty. Any alterations to the emission system components, such as the exhaust system, may be in violation of Federal and State laws.*
- *Refer to Owner's Maintenance Records. When servicing your motorcycle, bring this owner's manual to the dealership and complete information needed in the blank columns listed.*

⚠WARNING

Perform the service and maintenance operations as indicated in the regular service interval table. Lack of regular maintenance at the recommended intervals can affect the safe operation of your motorcycle, which could result in death or serious injury. (00010a)

⚠WARNING

If you operate your motorcycle under adverse conditions (severe cold, extreme heat, very dusty environment, very bad roads, through standing water, etc.), you should perform the regular maintenance intervals more frequently

to ensure the safe operation of your motorcycle. Failure to maintain your motorcycle could result in death or serious injury. (00094a)

Regular Service Intervals: 2008 VRSC Models

ITEM SERVICED	PROCEDURE	1000 MI. 1600 KM	5000 MI. 8000 KM	10,000 MI. 16,000 KM	15,000 MI. 24,000 KM	20,000 MI. 32,000 KM	25,000 MI. 40,000 KM	NOTES
Engine oil and filter	Replace		X	X	X	X	X	
Oil lines and brake system	Inspect for leaks	X	X	X	X	X	X	1
Air cleaner	Inspect, service as required	X	X	X	X	X	X	
Tires	Check pressure, inspect tread	X	X	X	X	X	X	
Clutch fluid	Check level and condition	X	X	X	X	X	X	
Rear belt and sprockets	Inspect, adjust belt	X	X	X	X	X	X	1
Throttle, brake and clutch controls	Check, adjust and lubricate	X	X	X	X	X	X	1
Jiffy stand	Inspect and lubricate	X	X	X	X	X	X	1
Brake fluid	Check levels and condition	X	X	X	X	X	X	5
Brake pads and discs	Inspect for wear	X	X	X	X	X	X	
Spark plugs	Inspect		X		X		X	
	Replace			X		X		
Electrical equipment and switches	Check operation	X	X	X	X	X	X	
Front fork oil		Replace every 50,000 miles 80,000 kilometers						1
Steering head bearings	Adjust	X				X		1, 2
Rear fork bearings		Repack every 30,000 miles 48,000 kilometers						1
Valve lash		Adjust valve lash every 15,000 miles 24,000 kilometers						1, 4
Cooling system	Inspect; check clamps for tightness, check coolant freeze point	X		X		X		1
Coolant		Replace every 30,000 miles 48,000 kilometers						1
Radiator	Clean	X	X	X	X	X	X	
Critical	Check tightness	X		X		X		1

fasteners								
Battery	Check battery and clean connections							3
Exhaust system	Inspect for leaks, cracks, and loose or missing fasteners or heat shields	X	X	X	X	X	X	3
Road test	Verify component and system functions	X	X	X	X	X	X	
NOTES:	1. Should be performed by an authorized Harley-Davidson dealer, unless you have the proper tools, service data and are mechanically qualified. 2. Disassemble, lubricate and inspect every 30,000 miles 48,000 kilometers . 3. Perform annually. 4. Could vary with frequency of operation and riding style. 5. Change D.O.T. 4 and flush brake system every two years.							

Owner's Maintenance Records

SERVICE MILE INTERVAL	DATE	DEALER NUMBER	TECHNICIAN NAME	TECHNICIAN SIGNATURE
1000 MI (1600 KM)				
5000 MI (8000 KM)				
10,000 MI (16,000 KM)				
15,000 MI (24,000 KM)				
20,000 MI (32,000 KM)				
25,000 MI (40,000 KM)				
30,000 MI (48,000 KM)				
35,000 MI (56,000 KM)				
40,000 MI (64,000 KM)				
45,000 MI (72,000 KM)				
50,000 MI (80,000 KM)				

Service Literature

Refer to Service Literature: 2008 VRSC Models. Visit any Harley-Davidson dealer or go to www.harley-davidson.com to purchase a service or parts manual for your motorcycle. Factory authorized manuals are the most complete and detailed source of information outside of your Harley-Davidson dealer.

Service Literature: 2008 VRSC Models

DOCUMENT	LANGUAGE	PART NUMBER
Service Manual	English	99591-08

Service Manual	English	99501-08
Electrical Diagnostics Manual	English	99499-08
Service and Electrical Diagnostics Manual	French	99501-08F
Service and Electrical Diagnostics Manual	German	99501-08G
Service and Electrical Diagnostics Manual	Spanish	99501-08S
Service and Electrical Diagnostics Manual	Italian	99501-08I
Parts Catalog	English	99457-08

H-D Michigan, Inc. Trademark Information

Harley, Harley-Davidson, H-D, Bar & Shield, Digital Tech, Digital Technician, Destroyer, Deuce, Dyna, Electra Glide, Evolution, Fat Boy, Glaze, Gloss, H-D, H-Dnet.com, HD, Harley, Heritage Softail, Heritage Springer, Low Rider, Night Rod, Night Train, Profile, Revolution, Road Glide, Road King, Rocker, Softail, Sportster, Sun Ray, Sunwash, Tech Link, Twin Cam 88, Twin Cam 88B, Twin Cam 96, Twin Cam 96B, Twin Cam 103, Twin Cam 103B, Twin Cam 110, Twin Cam 110B, Tour-Pak, Screamin' Eagle, Softail, Super Guide, Super Premium, SYN3, Ultra Glide, V-Rod, VRSC, V-Rod, VRSC, Wide Glide, and Harley-Davidson Genuine Motor Parts and Genuine Motor Accessories are among the trademarks of H-D Michigan, Inc.