Safety First

Safe Operating Rules

⚠WARNING

Motorcycles are different from other vehicles. They operate, steer, handle and brake differently. Unskilled or improper use could result in loss of control, death or serious injury. (00556c)

- Take a rider training course.
- Read Owner's Manual before riding, adding accessories or servicing.
- Wear a helmet, eye protection and protective clothing.
- Never tow a trailer.

Before operating your motorcycle it is your responsibility to read and follow the operating and maintenance instructions in this manual, and follow these basic rules for your personal safety.

- Know and respect the rules of the road. See Rules of the Road. Carefully read and familiarize yourself with the motorcycle safety information that is provided by your country or state. In the United States, read the RIDING TIPS booklet that is provided with your Owner's Manual and the MOTORCYCLE HANDBOOK which is made available by your state.
- Before starting engine, check for proper operation of brake, clutch, shifter, throttle controls, correct fuel and oil supply.

⚠WARNING

Harley-Davidson parts and accessories are designed for Harley-Davidson motorcycles. Using non-Harley-Davidson parts or accessories can adversely affect performance, stability or handling, which could result in death or serious injury. (00001b)

- Use only Harley-Davidson approved parts and accessories. Use of certain other manufacturer's performance parts will void your new motorcycle warranty. See your Harley-Davidson dealer for details.

⚠WARNING

Stop the engine when refueling or servicing the fuel system. Do not smoke or allow open flame or sparks near gasoline. Gasoline is extremely flammable and highly explosive, which could result in death or serious injury. (00002a)

When refueling your motorcycle, observe the following rules.

- Refuel in a well ventilated area with the engine turned off.
- Remove fuel filler cap slowly.
- Do not smoke or allow open flames or sparks when refueling or servicing the fuel system.
- Do not fill fuel tank above the bottom of the filler neck insert.
- Leave air space to allow for fuel expansion.

⚠WARNING

Do not store motorcycle with gasoline in tank within the

home or garage where open flames, pilot lights, sparks or electric motors are present. Gasoline is extremely flammable and highly explosive, which could result in death or serious injury. (00003a)

⚠WARNING

Engine exhaust from this product contains chemicals known to the State of California to cause cancer, and birth defects or other reproductive harm. (00004f)

⚠WARNING

Do not run motorcycle in a closed garage or confined area. Inhaling motorcycle exhaust, which contains poisonous carbon monoxide gas, could result in death or serious injury. (00005a)

⚠WARNING

The jiffy stand locks when placed in the full forward (down) position with vehicle weight on it. If the jiffy stand is not in the full forward (down) position with vehicle weight on it, the vehicle can fall over which could result in death or serious injury. (00006a)

⚠WARNING

Be sure jiffy stand is fully retracted before riding. If jiffy stand is not fully retracted, it can contact the road surface causing a loss of vehicle control, which could result in death or serious injury. (00007a)

- A new motorcycle must be operated according to the special break-in procedure. See Break-in Riding Rules.
- Operate motorcycle only at moderate speed and out of traffic until you have become thoroughly familiar with its operation and handling characteristics under all conditions.

NOTE:

We recommend that you obtain information and formal training in the correct motorcycle riding technique. In the United States, the Motorcycle Safety Foundation® offers beginning and advanced rider safety courses. Call 800-446-9227 for information.

⚠WARNING

Travel at speeds appropriate for road and conditions and never travel faster than posted speed limit. Excessive speed can cause loss of vehicle control, which could result in death or serious injury. (00008a)

- Do not exceed the legal speed limit or drive too fast for existing conditions. Always reduce speed when poor driving conditions exist. High speed increases the influence of any other condition affecting stability and increases the possibility of loss of control.
- Pay strict attention to road surfaces and wind conditions and keep both hands on the handlebar grips at all times when riding the motorcycle. Any two wheeled vehicle may be subject to upsetting forces such as wind blasts from passing trucks, holes in the pavement, rough road surfaces, rider control error, etc. These forces may influence the handling characteristics of your motorcycle. If this happens, reduce speed and guide the motorcycle with a relaxed grip to a controlled condition. Do not brake abruptly or force the handlebar.

This may aggravate an unstable condition.

- Keep cargo weight concentrated close to the motorcycle and as low as possible to minimize the change in the motorcycle's center of gravity. Distribute weight evenly on both sides of the vehicle and do not load bulky items too far behind the rider or add weight to the handlebars or front forks. Do not exceed maximum specified load in each saddlebag.

NOTE:

New riders should gain experience under various conditions while riding at moderate speeds.

- Operate your motorcycle defensively. Remember, a motorcycle does not afford the same protection as an automobile in an accident. One of the most common accident situations occurs when the driver of the other vehicle fails to see or recognize a motorcycle and turns left into the on-coming motorcyclist. Operate only with headlamp on.
- Wear an approved helmet, clothing, and foot gear suited for motorcycle riding. Bright or light colors are best for greater visibility in traffic, especially at night. Avoid loose, flowing garments and scarves.

⚠WARNING

Avoid contact with exhaust system and wear protective clothing that completely covers legs while riding. Exhaust pipes and mufflers get very hot when engine is running and remain too hot to touch, even after engine is turned off. Failure to wear protective clothing could result in burns or other serious injury. (00009a)

- When carrying passengers, it is your responsibility to instruct them on proper riding procedures. (See the RIDING TIPS booklet included in your Harley-Davidson Owner's Kit.)

- Do not allow other individuals, under any circumstances, to operate your motorcycle unless you know they are experienced, licensed riders and are thoroughly familiar with the operation of your particular motorcycle.

- Protect your motorcycle against theft. After parking your motorcycle, lock the steering head and remove the key from the motorcycle.
- Safe motorcycle operation requires alert mental judgment combined with a defensive driving attitude. Do not allow fatigue, alcohol or drugs to endanger your safety or that of others.
- Vehicles equipped with a sound system should have the volume adjusted to a non-distracting level before operating vehicle.
- Maintain your motorcycle in proper operating condition in accordance with Regular Service Intervals: 2013 Touring Models. Proper care and maintenance, including tire pressure, condition and tread depth plus proper adjustment to steering head bearings are particularly important to the stability and safe operation of the motorcycle.

⚠WARNING

Do not operate vehicle with forks locked. Locking the forks restricts the vehicle's turning ability, which could result in death or serious injury. (00035a)

⚠WARNING

Perform the service and maintenance operations as indicated in the regular service interval table. Lack of regular maintenance at the recommended intervals can affect the safe operation of your motorcycle, which could result in death or serious injury. (00010a)

⚠WARNING

Do not operate motorcycle with loose, worn or damaged

steering or suspension systems. Contact a Harley-Davidson dealer for repairs. Loose, worn or damaged steering or suspension components can adversely affect stability and handling, which could result in death or serious injury. (00011a)

⚠WARNING

Regularly inspect shock absorbers and front forks. Replace leaking, damaged or worn parts that can adversely affect stability and handling, which could result in death or serious injury. (00012a)

⚠WARNING

Use Harley-Davidson replacement fasteners. Aftermarket fasteners can adversely affect performance, which could result in death or serious injury. (00013a)

- See your Harley-Davidson service manual for proper torque values.
- Aftermarket fasteners may not have the specific property requirements to perform properly.

⚠WARNING

Be sure tires are properly inflated, balanced, undamaged, and have adequate tread. Inspect your tires regularly and see a Harley-Davidson dealer for replacements. Riding with excessively worn, unbalanced, improperly inflated, overloaded or damaged tires can lead to tire failure and adversely affect stability and handling, which could result in death or serious injury. (00014b)

⚠WARNING

Replace punctured or damaged tires. In some cases, small punctures in the tread area may be repaired from within the removed tire by a Harley-Davidson dealer. Speed should NOT exceed 50 mph (80 km/h) for the first 24 hours after repair, and the repaired tire should NEVER be used over 80 mph (130 km/h). Failure to follow this warning could lead to tire failure and result in death or serious injury. (00015b)

⚠WARNING

Do not exceed the motorcycle's Gross Vehicle Weight Rating (GVWR) or Gross Axle Weight Rating (GAWR). Exceeding these weight ratings can lead to component failure and adversely affect stability, handling and performance, which could result in death or serious injury. (00016f)

- GVWR is the sum of the weight of the motorcycle, accessories, and the maximum weight of the rider, passenger and cargo that can be safely carried.
- The GVWR is shown on the information label, located on the frame steering head or the frame downtube.
- GAWR is the maximum amount of weight that can be safely carried on each axle.
- Refer to weight table(s). See Specifications.

⚠WARNING

Do not tow a disabled motorcycle. Towing can adversely affect stability and handling, which could result in death or serious injury. (00017a)

⚠WARNING

Do not pull a trailer with a motorcycle. Pulling a trailer can cause tire overload, damage and failure, reduced braking performance, and adversely affect stability and handling, which could result in death or serious injury. (00018c)

⚠CAUTION

Direct contact of D.O.T. 4 brake fluid with eyes can cause irritation. Avoid eye contact. In case of eye contact flush with large amounts of water and get medical attention. Swallowing large amounts of D.O.T. 4 brake fluid can cause digestive discomfort. If swallowed, obtain medical attention. Use in well ventilated area. KEEP OUT OF REACH OF CHILDREN. (00240a)

⚠WARNING

Batteries, battery posts, terminals and related accessories contain lead and lead compounds, and other chemicals known to the State of California to cause cancer, and birth defects or other reproductive harm. Wash hands after handling. (00019e)

⚠WARNING

Do not open storage compartments while riding. Distractions while riding can lead to loss of control, which could result in death or serious injury. (00082a)

⚠WARNING

Consult a Harley-Davidson dealer regarding any questions or problems that occur in the operation of your motorcycle. Failure to do so can aggravate an initial problem, cause costly repairs, cause an accident and could result in death or serious injury. (00020a)

- Be sure all equipment required by federal, state and local law is installed and in good operating condition.

Anti-Lock Brake System

⚠WARNING

If ABS lamp remains on continuously, the ABS is not operating. The standard brake system is operational, but wheel lock up can occur. Contact a Harley-Davidson Dealer to have ABS repaired. A locked wheel will skid and can cause loss of vehicle control, which could result in death or serious injury. (00361a)

⚠WARNING

ABS cannot prevent lockup of rear wheel due to engine braking. ABS will not aid in cornering or on loose/uneven surfaces. A locked wheel will skid and can cause loss of vehicle control, which could result in death or serious injury. (00362a)

See Brake System to properly operate motorcycles equipped with an Anti-lock Brake System (ABS).

Rules of the Road

- Always sound your horn, actuate your turn signals, and exercise caution when passing other vehicles going in the same direction. Never try to pass another vehicle going in the same direction at street intersections, on curves, or when going up or down a hill.
- At street intersections give the right-of-way. Do not presume you have the right-of-way, as the other driver may not know it is your turn.
- Always signal when preparing to stop, turn or pass.
- All traffic signs, including those used for the control of traffic at intersections, should be obeyed promptly. SLOW DOWN signs near schools and CAUTION signs at railroad crossings should always be observed and your actions governed accordingly.
- When intending to turn, signal at least 100 ft 30.5 m before reaching the turning point. If turning across an intersection, move over to the centerline of the street (unless local rules require otherwise). Slow down when entering the intersection and turn carefully.

- Never anticipate a traffic light. When a change is indicated from GO to STOP (or STOP to GO) in the traffic control systems at intersections, slow down and wait for the light to change. Never run through a yellow or red traffic light.
- While turning either right or left, watch for pedestrians, animals, as well as vehicles.
- Do not leave the curb or parking area without signaling. Be sure your way is clear to enter moving traffic. A moving line of traffic always has the right-of-way.
- Be sure your license plate is installed in the position specified by law and is clearly visible at all times. Keep the plate clean.
- Ride at a safe speed that is consistent with the type of highway you are on. Pay strict attention to whether the road is dry, oily, icy or wet.
- Watch for debris such as leaves or loose gravel.
- Weather and traffic conditions on the highway dictate adjusting your speed and driving habits accordingly.

Accessories and Cargo

Harley-Davidson Motor Company cannot test and make specific recommendations concerning every accessory or combination of accessories sold. Therefore, the rider must be responsible for safe operation of the motorcycle when installing accessories or carrying additional weight.

⚠WARNING

See the Accessories and Cargo section in your owner's manual. Improper cargo loading or accessory installation can cause component failure and adversely affect stability, handling and performance, which could result in death or serious injury. (00021b)

⚠WARNING

Do not exceed the motorcycle's Gross Vehicle Weight Rating (GVWR) or Gross Axle Weight Rating (GAWR). Exceeding these weight ratings can lead to component failure and adversely affect stability, handling and performance, which could result in death or serious injury. (00016f)

- GVWR is the sum of the weight of the motorcycle, accessories, and the maximum weight of the rider, passenger and cargo that can be safely carried.
- GAWR is the maximum amount of weight that can be safely carried on each axle.
- The GVWR and GAWR are shown on the information label which is located on the frame down tube in some destinations.
- Refer to weight table(s). See Specifications.

⚠WARNING

Do not pull a trailer with a motorcycle. Pulling a trailer can cause tire overload, damage and failure, reduced braking performance, and adversely affect stability and handling, which could result in death or serious injury. (00018c)

Accessories and Cargo Guidelines

The following guidelines should be used when equipping a motorcycle, carrying passengers and/or cargo.

⚠WARNING

Travel at speeds appropriate for road and conditions and never travel faster than posted speed limit. Excessive speed can cause loss of vehicle control, which could result in death or serious injury. (00008a)

- Do not exceed the legal speed limit or drive too fast for existing conditions. Always reduce speed when poor driving conditions exist. High speed increases the influence of any other condition affecting stability and increases the possibility of loss of control.
- Pay strict attention to road surfaces and wind conditions and keep both hands on the handlebar grips at all times when riding the motorcycle. Any two wheeled vehicle may be subject to upsetting forces such as wind blasts from passing trucks, holes in the pavement, rough road surfaces, rider control error, etc. These forces may influence the handling characteristics of your motorcycle. If this happens, reduce speed and guide the motorcycle with a relaxed grip to a controlled condition. Do not brake abruptly or force the handlebar. This may aggravate an unstable condition.
- Keep cargo weight concentrated close to the motorcycle and as low as possible. This minimizes the change in the motorcycle's center of gravity.
- Distribute weight evenly on both sides of the vehicle.
- Do not load bulky items too far behind the rider or add weight to the handlebars or front forks.
- Do not exceed maximum specified load in each saddlebag.
- Luggage racks are designed for lightweight items. Do not overload racks.
- Be sure cargo is secure and will not shift while riding and recheck the cargo periodically. Accessories that change the operator's riding position may increase reaction time and affect handling of the motorcycle.
- Additional electrical equipment may overload the motorcycle's electrical system possibly resulting in electrical system and/or component failure.

⚠WARNING

The front and/or rear guard(s) can provide limited leg and cosmetic vehicle protection under unique circumstances. (Fall over while stopped, very slow speed slide.) It is not made or intended to provide protection from bodily injury in a collision with another vehicle or any other object. (00022a)

- Large surfaces such as fairings, windshields, backrests, and luggage racks can have an adverse affect on stability and handling.

- Only properly installed Genuine Harley-Davidson accessories designed specifically for your motorcycle model should be used.
- Pay particular attention to the weights of accessories, cargo, riding gear, passenger and rider and how the sum total of all these weights affect the loading capacity of your motorcycle.

⚠WARNING

Harley-Davidson parts and accessories are designed for Harley-Davidson motorcycles. Using non-Harley-Davidson parts or accessories can adversely affect performance, stability or handling, which could result in death or serious injury. (00001b)

⚠WARNING

Only Touring Harley-Davidson Motorcycles are suitable for sidecar use. Consult a Harley-Davidson dealer. Use of motorcycles other than Touring models with sidecars could result in death or serious injury. (00040a)

Noise Control System

Tampering

Owners are warned that removal or replacement of any noise control system component may be prohibited by law. This prohibition applies prior to vehicle sale or delivery to the ultimate purchaser. Use of a vehicle on which noise control system components have been removed or rendered inoperative may also be prohibited by law.

Labels

See Labels for safety and maintenance labels which were on the vehicle when new. If removed, replacement labels may be purchased for your motorcycle. Refer to Labels.

NOTE:

Some labels may be available in different languages for destinations outside the United States. See a Harley-Davidson dealer for all labels available for purchase.

Labels

ITEM	PART NO.	DESCRIPTION	LOCATION	TEXT
1	29127-95B	General warnings	Top of air cleaner cover	WARNING: Motorcycles are different from other vehicles. They operate, steer, handle and brake differently. Unskilled or improper use could result in loss of control, death or serious injury. • Take a rider training course. • Read Owner's Manual before riding, adding accessories or servicing. • Wear a helmet, eye protection and protective clothing. • Never tow a trailer. For a manual, find nearest dealer at 1-800-443-2153 or www.harley-davidson.com
2	15368-01A	Battery warning	Under seat, behind fuel	WARNING: A connected battery can cause a spark or motorcycle startup while servicing. Death or

			tank on main harness trough	serious injury could occur. • Disconnect negative cable before servicing. • Keep cable away from terminal while servicing.
3	14148-86	Engine guard label	On front of engine guard below center mount	This guard may provide limited leg and cosmetic vehicle protection under unique circumstances (fall over while stopped, very low speed slide). It is not made nor intended to provide protection from bodily injury in a collision with another vehicle or any other object.
4	90820-93D	Saddlebag load limits	Inside saddlebag	WARNING: Too much weight in saddlebags can cause loss of control. Death or serious injury could occur. • Do not put more than 15 pounds (6.8 kg) in each saddlebag on a 2008 and earlier vehicles. • Do not put more than 20 pounds (9.1 kg) in each saddlebag on 2009 and later vehicles. • Put equal weight in each saddlebag. • See Accessories and Cargo section of Owner's Manual.
5	90821-74C	Tour-Pak load limits	Inside Tour-Pak lid	WARNING: Too much weight in Tour-Pak® can cause loss of control. Death or serious injury could occur. • Do not put more than 25 pounds (11.3 kg) in Tour-Pak® on 2008 and earlier motorcycles. • Do not put more than 30 pounds (13.6 kg) in Tour-Pak® on 2009 and later motorcycles. • See Accessories and Cargo section of Owner's Manual for more information.

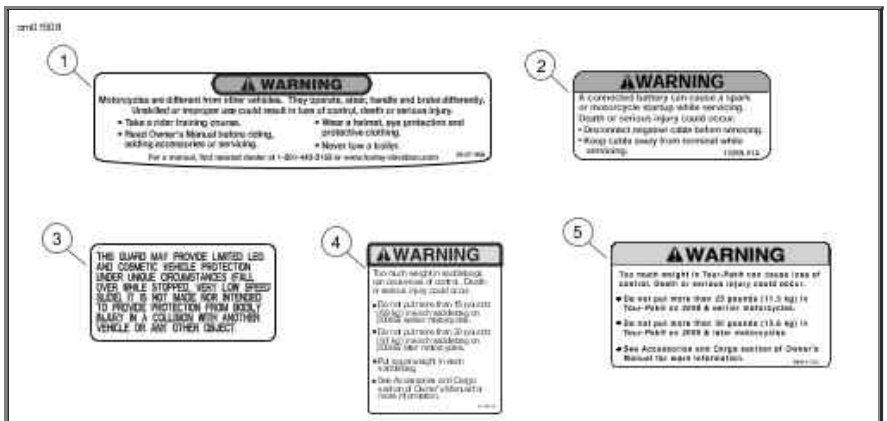

Labels

Identification

Vehicle Identification Number (VIN)

General

See Typical Harley-Davidson VIN: 2013 Touring Models. A unique 17-digit serial or Vehicle Identification Number (VIN) is assigned to each motorcycle. Refer to Harley-Davidson VIN Breakdown: 2013 Touring Models.

Location

See VIN Locations. The full 17-digit VIN is stamped on the right side of the frame near the steering head. In some destinations, a printed VIN label is also attached to the right front downtube.

Abbreviated VIN

An abbreviated VIN showing the vehicle model, engine type, model year, and sequential number is stamped on the left side of the crankcase between the engine cylinders.

NOTE:

Always give the full 17-digit Vehicle Identification Number when ordering parts or making any inquiry about your motorcycle.

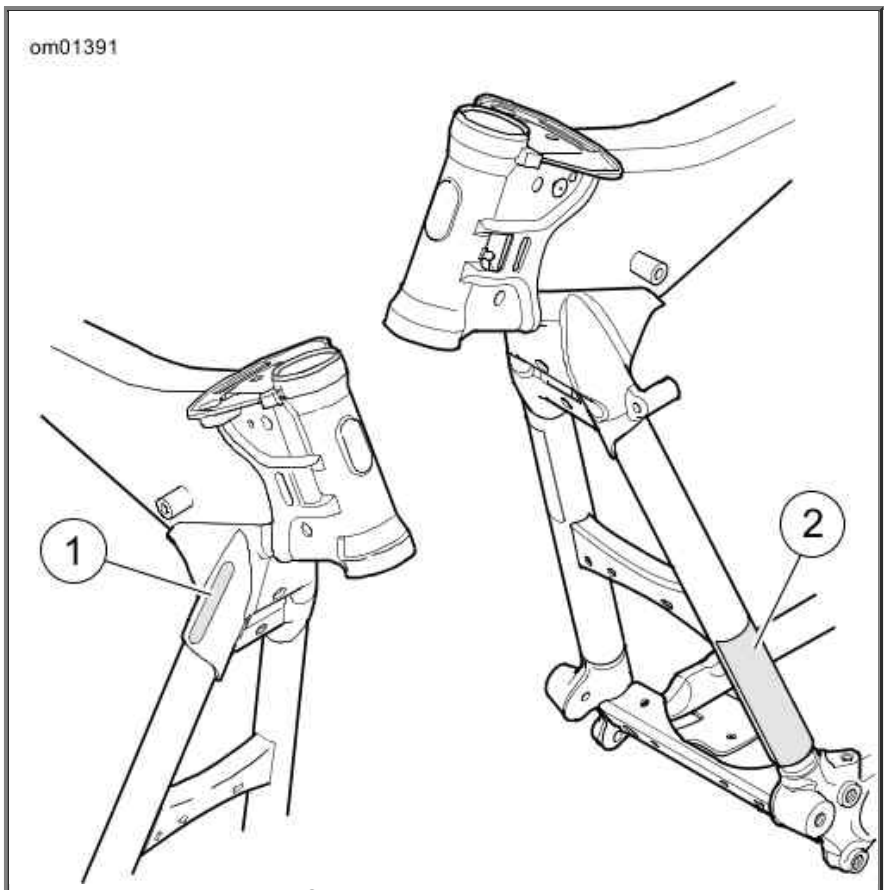

1. Stamped VIN
2. VIN label

VIN Locations

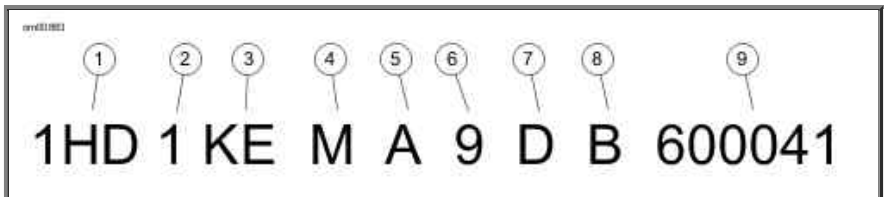

Typical Harley-Davidson VIN: 2013 Touring Models

Harley-Davidson VIN Breakdown: 2013 Touring Models

POSITION	DESCRIPTION	POSSIBLE VALUES
1	World manufacturer identifier	1HD=Originally manufactured for sale **within** the United States 5HD=Originally manufactured for sale **outside** of the

		United States 932=Originally manufactured in and for sale only in Brazil market MEG=Originally manufactured in and for sale only in India market	
2	Motorcycle type	1=Heavyweight motorcycle (901 cm^3 or larger)	
3	Model	See VIN model code table	
4	Engine type	M=Twin Cam 103™, 1690 cm^3 air-cooled, fuel-injected	
5	Calibration/configuration, introduction	**Normal Introduction** 1=Domestic (DOM) 3=California (CAL) A=Canada (CAN) C=HDI E=Japan (JPN) G=Australia (AUS) J=Brazil (BRZ) L=Asia Pacific (APC) N=India (IND)	**Mid-year or Special Introduction** 2, 4=Domestic (DOM) 5, 6=California (CAL) B=Canada (CAN) D=HDI F=Japan (JPN) H=Australia (AUS) K=Brazil (BRZ) M=Asia Pacific (APC) P=India (IND)
6	VIN check digit	Can be 0-9 or X	
7	Model year	D=2013	
8	Assembly plant	B=York, PA U.S.A. D=H-D Brazil-Manaus, Brazil (CKD) N=Haryana India (Bawal District Rewari)	
9	Sequential number	Varies	

VIN Model Codes: 2013 Touring Models

CODE	MODEL	CODE	MODEL
FB	FLHR Road King®	KB	FLHX Street Glide®
	FLHR ANV Road King® 110th Anniversary Edition	KE	FLHTK Electra Glide® Ultra Limited
FR	FLHRC Road King® Classic		FLHTK ANV Electra Glide® Ultra Limited 110th Anniversary Edition
FW	FLHR Road King® Shrine	FF	FLHTC Electra Glide® Classic
KH	FLTRX Road Glide® Custom	FC	FLHTCU Ultra Classic® Electra Glide®
KG	FLTRU Road Glide® Ultra	FL	FLHTCU Ultra Classic® Electra Glide® Shrine

Models and Features

Some models, features or configurations shown in this manual may not be available in all markets.

Anniversary Models

Anniversary model motorcycles have special badging, paint and serialized numbering.

Refer to the features and instructions for the standard non-anniversary model unless otherwise noted.

Specifications

Specifications

Engine: Twin Cam 103

ITEM	SPECIFICATION	
Number of cylinders	2	
Type	4-cycle, 45 degree V-Type, air-cooled	
Compression ratio	9.6:1	
Bore	3.875 in	98.42 mm
Stroke	4.38 in	111.3 mm
Displacement	103.0 in^3	1690 cm^3
Lubrication system	Pressurized, dry sump with oil cooler	

NOTE:

Specifications in this publication may not match those of official certification in some markets due to timing of publication printing, variance in testing methods, and/or vehicle differences. Customers seeking officially recognized regulatory specifications for their vehicle should refer to certification documents and/or contact their respective dealer or distributor.

Transmission

TRANSMISSION	SPECIFICATION
Type	Constant mesh, foot shift
Speeds	6 forward

Electrical

COMPONENT	SPECIFICATION	
Ignition timing	Not adjustable	
Battery	12 volt, 28 amp-hr, 405 CCA sealed and maintenance free	
Charging system	Three-phase, 50-amp system (585W @ 13V, 2000 rpm, 650W max power @13V)	
Spark plug type	6R12	
Spark plug size	12 mm	

Spark plug gap	0.038-0.043 in.	0.97-1.09 mm
Spark plug torque	12-18 ft-lbs	16.3-24.4 Nm

Sprocket Teeth

DRIVE	ITEM	NUMBER OF TEETH
Primary	Engine	34
	Clutch	46
Final	Transmission	32
	Rear wheel	68

Overall Drive Ratios

GEAR	RATIO
1st Gear	9.593
2nd Gear	6.650
3rd Gear	4.938
4th Gear	4.000
5th Gear	3.407
6th Gear	2.875

Capacities

ITEM	U.S.	L
Fuel tank (total)	6.0 gal	22.7
Low fuel warning light on	1.0 gal	3.8
Engine oil with filter *	4.00 qt	3.79
Transmission ** (approximate)	1.00 qt	0.95
Primary chaincase (approximate)	1.40 qt	1.32
* When refilling, initially add 3.0 qt 2.84 L and add as needed to bring level within specification. ** When refilling, initially add 28 oz 0.83 L and add as needed to bring level within specification.		

⚠WARNING

Do not exceed the motorcycle's Gross Vehicle Weight Rating (GVWR) or Gross Axle Weight Rating (GAWR). Exceeding these weight ratings can lead to component failure and adversely affect stability, handling and performance, which could result in death or serious injury. (00016f)

- GVWR is the sum of the weight of the motorcycle, accessories, and the maximum weight of the rider, passenger and cargo that can be safely carried.
- GAWR is the maximum amount of weight that can be safely carried on each axle.

- The GVWR and GAWR are shown on the information label, located on the frame down tube.

NOTE:

The maximum additional weight allowed on the motorcycle equals the Gross Vehicle Weight Rating (GVWR) minus the running weight. For example, a motorcycle with GVWR of 1200 lbs (544 kg) having a running weight of 800 lbs (363 kg), would allow a maximum of an additional 400 lbs (181 kg) combined weight of the rider, passenger, riding gear, cargo and installed accessories.

Weights: FLHTC, FLHTCU, FLHTK, FLTRU

ITEM	FLHTC		FLHTCU		FLHTK		FLTRU	
	LB.	KG	LB.	KG	LB.	KG	LB.	KG
Running weight*	864	391.9	889	403.3	901	408.7	888	402.8
Maximum added weight allowed**	496	225.0	471	213.6	459	208.2	472	214.1
GVWR	1360	616.9	1360	616.9	1360	616.9	1360	616.9
GAWR front	500	226.8	500	226.8	500	226.8	500	226.8
GAWR rear	927	420.5	927	420.5	927	420.5	927	420.5
*The total weight of the motorcycle as delivered with all oil/fluids and approximately 90% of fuel. **The total weight of accessories, cargo, riding gear, passenger and rider cannot exceed this weight.								

Weights: FLHR, FLHRC, FLTRX, FLHX

ITEM	FLHR		FLHRC		FLTRX		FLHX	
	LB.	KG	LB.	KG	LB.	KG	LB.	KG
Running weight*	812	368.3	810	367.4	817	370.6	822	372.9
Maximum added weight allowed**	548	248.6	550	249.5	543	246.3	538	244.0
GVWR	1360	616.9	1360	616.9	1360	616.9	1360	616.9
GAWR front	500	226.8	500	226.8	500	226.8	500	226.8
GAWR rear	927	420.5	927	420.5	927	420.5	927	420.5
*The total weight of the motorcycle as delivered with all oil/fluids and approximately 90% of fuel. **The total weight of accessories, cargo, riding gear, passenger and rider cannot exceed this weight.								

Dimensions: FLHTC, FLHTCU, FLHTK, FLTRU

ITEM	FLHTC		FLHTCU		FLHTK		FLTRU	
	IN.	MM	IN.	MM	IN.	MM	IN.	MM
Length	98.3	2497	98.6	2504	98.6	2504	98.7	2507
Overall Width	38.0	965	38.0	965	38.0	965	36.2	919
Overall Height	61.0	1549	61.0	1549	61.0	1549	55.0	1397
Wheel base	63.5	1613	63.5	1613	63.5	1613	63.5	1613
Road clearance	5.1	130	5.1	130	5.1	130	5.1	130
Saddle height*	27.3	693	27.3	693	27.3	693	27.3	693
*With 180 lb. 81.7 kg rider on seat								

Dimensions: FLHR, FLHRC, FLTRX, FLHX

ITEM	FLHR		FLHRC		FLTRX		FLHX	
	IN.	MM	IN.	MM	IN.	MM	IN.	MM

Length	95.0	2413	94.2	2393	95.0	2413	95.0	2413
Overall Width	37.4	950	37.5	953	35.8	909	38.0	965
Overall Height	55.1	1400	55.1	1400	50.0	1270	52.2	1326
Wheel base	63.5	1613	63.5	1613	63.5	1613	63.5	1613
Road clearance	5.1	130	5.1	130	5.1	130	4.7	119
Saddle height*	26.5	673	26.7	678	26.1	663	26.1	663
*With 180 lb. 81.7 kg rider on seat								

Bulb Chart

LAMP	DESCRIPTION (ALL LAMPS 12 VOLT)	BULBS REQUIRED	CURRENT DRAW AMPERAGE	HARLEY-DAVIDSON PART NUMBER
Headlamp	FLHTC/U, FLHR/C, FLHX, FLHTK	1	4.58/5.0	68329-03
	FLTRX, FLTRU	2	4.58/5.0	68329-03
	Position lamp, international	1	0.32	53436-97
Tail and stop lamp	All models except domestic and international FLHX, FLTRX	1	0.59/2.10	68167-04
Turn signal lamp	Front/running (domestic)	2	2.25/0.59	68168-89A
	Front (international)	2	2.25	68572-64B
	Front, FLHX (HDI)	2	1.75	68163-84
	Rear, FLHR, FLHRC, FLHTC/U, FLHTK, FLTRU	2	2.25	68572-64B
	Rear, FLHX, FLTRX (domestic)	2	2.25/0.59	68168-89A
	Rear, FLHX, FLTRX (international)*	LED	N/A	N/A
	Rear, FLHX, FLTRX (Canadian)	2	2.25	68572-64B
Additional lighting	Tour-Pak side lamps* FLHTCU, FLHTK, FLTRU	N/A	0.14 0.14	53788-06 (right side) 53789-06 (left side)
	Tour-Pak tail/stop lamps	2	2.25/0.59	68168-89A
	Fender tip lamps, front	1	0.30	68193-95
	Fender tip lamps, rear*	N/A	N/A	69375-10 (FLHX, FLTRX domestic, not Canadian) 59672-09 (all but FLHX, FLTRX domestic)
	License plate lamp international * FLHTC/U, FLHTK, FLHR, FLTRU	1	N/A	69378-09
	License plate lamp FLHX, FLTRX (Canadian)	2	0.35	52441-95
	Auxiliary lamps	2	2.1	68453-05
	Fog lamps international	2	2.1	68453-05
Instrument panel lamps	High beam, Oil pressure, Neutral and Turn signal indicator *	Instrument panel is illuminated with LEDs. Replace entire assembly upon failure.		
Gauge lamps	Speedometer	N/A	N/A	N/A
	Odometer	N/A	N/A	N/A

FLHR/C	Fuel gauge*	Illuminated with LEDs. Replace assembly upon failure.		
	Engine	N/A	N/A	N/A
Gauge lamps FLHTC/U FLTRX FLTRU FLHX	Speedometer	N/A	N/A	N/A
	Tachometer	N/A	N/A	N/A
	Voltmeter	1	0.24	67445-00
	Oil pressure gauge FLHTC/U, FLHX, FLTRX, FLTRU	1	0.24	67445-00
	Air temperature gauge FLHTC/U, FLHX, FLTRX, FLTRU	1	0.24	67445-00
	Fuel gauge	1	0.24	67445-00
Gauge lamps FLHTK	Speedometer	N/A	N/A	N/A
	Tachometer	N/A	N/A	N/A
	Voltmeter	1	0.24	67477-10
	Oil pressure gauge	1	0.24	67477-10
	Air temperature gauge	1	0.24	67477-10
	Fuel gauge	1	0.24	67477-10
Items with *	Illuminated with LEDs. Replace entire assembly upon failure.			

Specified Tires

MODEL	MOUNT	SIZE	SPECIFIED TIRE	PRESSURE (COLD)	
				PSI	kPa
All models except FLHRC, FLTRX, FLHX	front	17 in	Dunlop D408F 130/80B17 65H	36	248
FLHRC	front	16 in	Dunlop D408F 130/90B16 67H	36	248
FLTRX, FLHX	front	18 in	Dunlop D408F 130/70B18 63H	36	248
All models	rear	16 in	Dunlop D407 180/65B16 81H	40	276

Tire Data

⚠WARNING

Match tires, tubes, rim strips or seals, air valves and caps to the correct wheel. Contact a Harley-Davidson dealer. Mismatching can lead to tire damage, allow tire slippage on the wheel or cause tire failure, which could result in death or serious injury. (00023c)

⚠WARNING

Use only Harley-Davidson specified tires. See a Harley-Davidson dealer. Using non-specified tires can adversely affect stability, handling or braking, which could result in death or serious injury. (00024b)

Refer to Specified Tires for specified tires and recommended pressures.

⚠WARNING

Install new seal before mounting tire. Riding motorcycle without seal in place can sever valve stem causing rapid air loss leading to the loss of control, which could result in death or serious injury. (00622b)

2012 and later Touring motorcycles with profile laced wheels (wire spoked wheels with smooth round rims) are fitted with a special rim seal, a rim strip and a tubeless tire. An inner tube is not used. These rims are unique and identified by the letters MTM and the word TUBELESS etched into the rim. Never install a tire with an inner tube on these type wheels. Install a new rim seal and rim strip each time a tire is mounted on a profile laced wheel.

Steel laced rims use an inner tube and rim strip. Tubeless tires fitted with the correct size inner tubes may be used with these wheels. Install a new inner tube and rim strip each time a new tire is installed on a steel laced wheel.

Tubeless tires are used on all Harley-Davidson cast and disc wheels.

Tire sizes are molded on the tire sidewall. Inner tube sizes are printed on the tube.

⚠WARNING

Harley-Davidson front and rear tires are not the same. Interchanging front and rear tires can cause tire failure, which could result in death or serious injury. (00026a)

⚠WARNING

Be sure tires are properly inflated, balanced, undamaged, and have adequate tread. Inspect your tires regularly and see a Harley-Davidson dealer for replacements. Riding with excessively worn, unbalanced, improperly inflated, overloaded or damaged tires can lead to tire failure and adversely affect stability and handling, which could result in death or serious injury. (00014b)

Always maintain proper tire pressure as specified in Specified Tires. Do not load tires beyond GAWR specified in Weights: FLHTC, FLHTCU, FLHTK, FLTRU and Weights: FLHR, FLHRC, FLTRX, FLHX. Under-inflated, over-inflated or overloaded tires can fail.

Harley-Davidson does not perform any testing with only nitrogen in tires. Harley-Davidson neither recommends nor discourages the use of pure nitrogen to inflate tires.

⚠WARNING

Replace tire immediately with a Harley-Davidson specified tire when wear bars become visible or only 1/32 in (0.8 mm) tread depth remains. Riding with a worn tire could result in death or serious injury. (00090c)

Harley-Davidson tires are equipped with wear bars that run horizontally across the tread. When a tire is worn to the point the tread wear indicator bars become visible on the tread surfaces, or 1/32 in. (0.8mm) tread depth remains, the tire can:

- Be more easily damaged leading to tire failure.
- Provide reduced traction.
- Adversely affect stability and handling.

India Tire Compliance Statement: Harley-Davidson Motor Company declares that the tires listed in the specifications section meet the Indian Standard 15627 requirement of the Bureau of Indian Standards (as amended from time to time) required for registration of vehicles assembled in India. These tires also comply with the Central Motor Vehicle Rules requirements, 1989.

Gasoline Blends

Your motorcycle was designed to get the best performance and efficiency using unleaded gasoline. Most gasoline is blended with alcohol and/or ether to create oxygenated blends. The type and amount of alcohol or ether added to the fuel is important.

CAUTION

Do not use gasoline that contains methanol. Doing so can result in fuel system component failure, engine damage and/or equipment malfunction. (00148a)

- Gasoline/METHYL TERTIARY BUTYL ETHER (MTBE) blends are a mixture of gasoline and as much as 15% MTBE. Gasoline/MTBE blends use in your motorcycle is approved.
- ETHANOL fuel is a mixture of ethanol (grain alcohol) and unleaded gasoline and can have an impact on fuel mileage. Fuels with an ethanol content of up to 10% may be used in your motorcycle without affecting vehicle performance. U.S. EPA regulations currently indicate that fuels with 15% ethanol (E15) are restricted from use in motorcycles at the time of this publication. Some motorcycles are calibrated to operate with higher ethanol concentrations to meet the fuel standards in certain countries.
- REFORMULATED OR OXYGENATED GASOLINES (RFG) describes gasoline blends that are specifically designed to burn cleaner than other types of gasoline. This results in fewer tailpipe emissions. They are also formulated to evaporate less when filling the tank. Reformulated gasolines use additives to oxygenate the gas. Your motorcycle will run normally using this type of fuel. Harley-Davidson recommends using it whenever possible as an aid to cleaner air in our environment.
- Do not use racing fuel or fuel containing methanol. Use of these fuels will damage the fuel system.
- The only octane booster Harley-Davidson recommends is SCREAMIN' EAGLE SUPER OCTANE BOOST (available only in the U.S.). This is the only octane booster that has been extensively tested and approved for use with Harley-Davidson engines and components.

Some gasoline blends might adversely affect starting, driveability or fuel efficiency. If any of these problems are experienced, try a different brand of gasoline or gasoline with a higher octane blend.

Fuel

Always use a good quality unleaded gasoline. Octane ratings are usually found on the pump. Refer to Octane Ratings.

⚠WARNING

Avoid spills. Slowly remove filler cap. Do not fill above bottom of filler neck insert, leaving air space for fuel expansion. Secure filler cap after refueling. Gasoline is extremely flammable and highly explosive, which could result in death or serious injury. (00028a)

⚠WARNING

Use care when refueling. Pressurized air in fuel tank can force gasoline to escape through filler tube. Gasoline is extremely flammable and highly explosive, which could result in death or serious injury. (00029a)

Modern service station pumps dispense a high flow of gasoline into a motorcycle fuel tank making air entrapment and pressurization a possibility.

Octane Ratings

SPECIFICATION	RATING
Pump Octane (R+M)/2	91 (95 RON)

Catalytic Converter

The motorcycle is equipped with a catalytic converter in the exhaust pipe collector.

CAUTION

Do not operate catalytic converter-equipped vehicle with engine misfire. If you operate the vehicle under this condition, the exhaust will become abnormally hot, which can cause vehicle damage, including emission control loss. (00149c)

CAUTION

Use only unleaded fuel in catalytic converter-equipped motorcycles. Using leaded fuel will damage the emission control system. (00150b)

Controls and Indicators

General: Controls and Indicators

⚠WARNING

Read the CONTROLS AND INDICATORS section before riding your motorcycle. Failure to understand the operation of the motorcycle could result in death or serious injury. (00043a)

Some features explained are unique to certain models. These features may be available as accessories for your Harley-Davidson motorcycle. See a Harley-Davidson dealer for a complete list of accessories that will fit your specific motorcycle.

Ignition Switch

⚠WARNING

The automatic-on headlamp feature provides increased visibility of the rider to other motorists. Be sure headlamp is on at all times. Poor visibility of rider to other motorists can result in death or serious injury. (00030b)

See YOUR OWNER'S MANUAL section. Be sure to record all your key numbers in the space provided at the front of this book.

See Ignition Switch. The ignition switch controls electrical functions of the motorcycle.

⚠WARNING

Do not operate vehicle with forks locked. Locking the forks restricts the vehicle's turning ability, which could result in death or serious injury. (00035a)

CAUTION

Protect your vehicle against theft. Failure to lock the motorcycle after parking could result in theft and/or equipment damage. (00151b)

CAUTION

Do not lubricate barrel locks with petroleum based lubricants or graphite. Inoperative locks may result. (00152a)

NOTES:

- *Harley-Davidson recommends removing key from ignition/fork lock before operating motorcycle. If you do not remove key, it can fall out during operation.*
- *ACCESS/ACCESSORY - Accessories and hazard warning flasher can be turned on. Instrument lamps are on. Brake lamp and horn can be activated. Key may be removed.*
- *The lamps illuminate when the switch is in the IGNITION position, as required by law in some localities.*

Ignition Switch Positions

MODEL	FUNCTION	LABEL	OPERATION
FLHR FLHRC	Switch	Switch is locked or unlocked by lifting switch cover, inserting key and turning key counterclockwise to lock, clockwise to unlock. Key may be removed in any position.	
		OFF	Ignition, lamps and accessories are off.
		ACCESSORY	Accessories are on. Hazard warning flashers can be left on. Instrument lamps are on. Brake lamp and horn can be activated.*
		IGNITION	Ignition, lamps and accessories are on.*
Other models	Key Lock	LOCK	Locks the switch in either the FORK LOCK or ACCESS switch position. Remove the key for security.
		UNLOCK	Unlocks the switch. Unlocked, the switch can be rotated to any of the 4 positions. To prevent loss when riding, remove the key.
	Switch	FORK LOCK	Locks fork in left position to discourage unauthorized use of vehicle when parked. See Fork Lock for operation.
		OFF	When switch is in OFF position, the ignition, lamps and accessories are off.
		IGNITION	When the switch is in the IGNITION position, the motorcycle can be started and all lamps and accessories will operate.
		ACCESS	When the switch is in the ACCESS position, the instrument lamps and accessories will operate but the engine can not be started. Brake lamp and horn can be activated. In ACCESS, the switch can be locked.
* International models have an additional function. Position lamp and tail lamp are also on.			

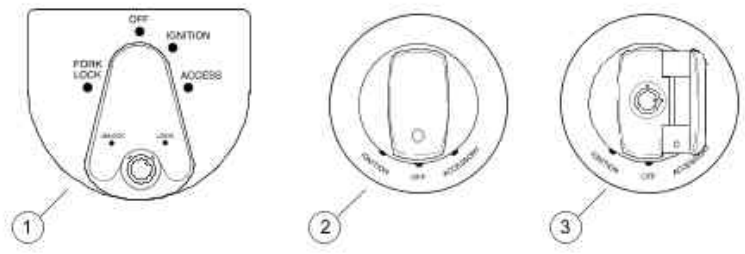

1. All except FLHR/FLHRC models
2. FLHR/FLHRC models (cover shown closed)
3. FLHR/FLHRC models (cover shown open)

Ignition Switch

Fork Lock

CAUTION

Protect your vehicle against theft. Failure to lock the motorcycle after parking could result in theft and/or equipment damage. (00151b)

Using the fork lock immediately after parking your motorcycle will discourage unauthorized use or theft when parking your motorcycle.

See Fork Lock: FLHR/FLHRC. On FLHR/FLHRC models, the fork lock is located at the top of the steering head, behind the headlamp nacelle and inset in the handlebar clamp shroud.

See Ignition Switch. On other models, the fork lock is integrated into the ignition switch.

NOTE:

Do not force the switch into the locked position or switch damage can occur.

⚠WARNING

Do not operate vehicle with forks locked. Locking the forks restricts the vehicle's turning ability, which could result in death or serious injury. (00035a)

To Lock Fork on FLHR/FLHRC Models

1. Turn fork to full left position.
2. See Fork Lock: FLHR/FLHRC. Insert key and turn key counterclockwise to LOCK position. Remove key.
3. To unlock fork, insert key and turn clockwise to UNLOCK position. Remove key.

To Lock Fork on Other Models

1. Turn fork to full left position.
2. See Ignition Switch. Turn switch knob to FORK LOCK and push knob down.
3. Insert key and turn key to LOCK position. Remove key.

4. To unlock fork, insert key and turn to UNLOCK position. Remove key and rotate switch knob out from the FORK LOCK position.

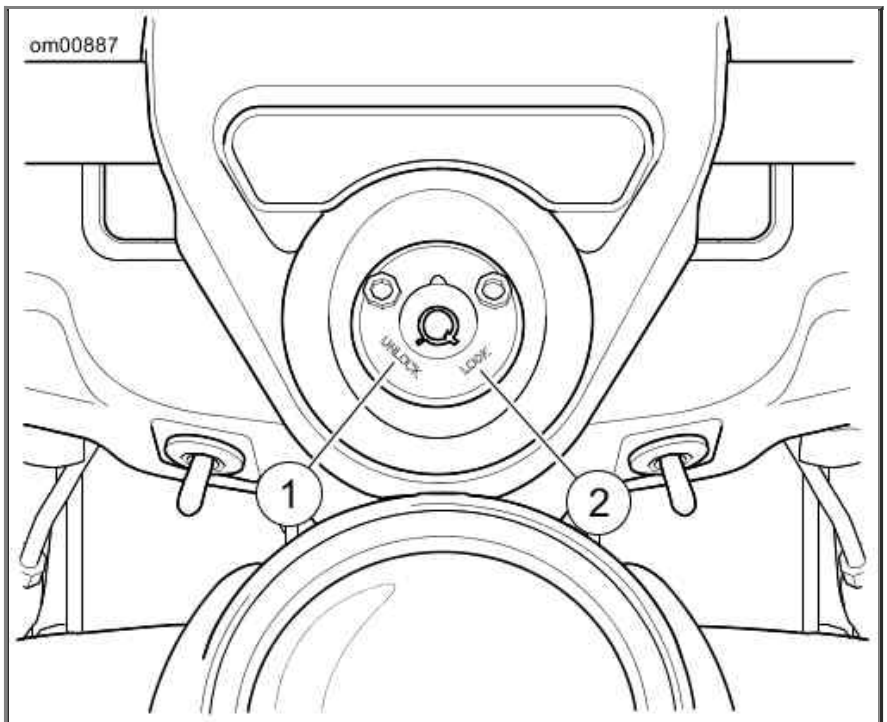

1. Unlock
2. Lock

Fork Lock: FLHR/FLHRC

Hand Controls: Basic Operation

Engine OFF/RUN Switch

See Basic Handlebar Controls (typical). The engine off/run switch (6) turns the ignition power ON or OFF. The engine off/run switch is located on the right handlebar control. Push the top portion of the engine off/run switch to turn off ignition power and shut the engine off. Push the bottom portion of the engine off/run switch to turn on ignition power.

NOTES:

- *The engine off/run switch must be in the RUN position to start or operate the engine.*
- *The engine off/run switch should be used to shut the engine off.*

1. To shut the engine off, push the top of the off/run switch to the ignition OFF position.

2. See Ignition Switch. Turn the ignition switch to the OFF position to turn the ignition power completely OFF.

Electric Starter Switch

NOTE:

Off/Run switch MUST be in RUN position to operate engine.

See Basic Handlebar Controls (typical). The electric starter switch is located on the right handlebar control group. See Starting the Engine for detailed operation procedures.

1. See Ignition Switch. Turn ignition switch to IGNITION.

2. Put the engine off/run switch in the RUN position and the transmission in neutral. Neutral (green) indicator lamp should be illuminated.

3. Push the START switch to operate starter motor.

Throttle Control Grip

See Basic Handlebar Controls (typical). The throttle control grip (8) is located on the right handlebar control and is operated with the right hand.

To reduce rider fatigue on long trips, a spring loaded throttle friction adjustment screw (9) is located at the bottom of the throttle grip clamp on non-cruise equipped models.

1. Slowly turn throttle control grip clockwise (toward the front of the motorcycle) to close the throttle (decelerate).
2. Slowly turn throttle control grip counterclockwise (toward rear of motorcycle) to open the throttle (accelerate).

⚠WARNING

Do not tighten throttle friction adjustment screw to the point where the engine will not return to idle automatically. Over-tightening can lead to loss of vehicle control, which could result in death or serious injury. (00031b)

3. Unscrew the throttle friction adjustment screw so the throttle returns to the idle position when the hand is removed from the grip.
4. Screw the throttle adjustment screw in to increase friction on grip. This provides a damping effect on throttle motion.

NOTE:

The throttle friction adjustment screw should not be used under normal stop and go operating conditions.

Clutch Hand Lever

⚠WARNING

Do not position fingers between hand control lever and handlebar grip. Improper hand positioning can impair control lever operation and cause loss of vehicle control, which could result in death or serious injury. (00032a)

See Basic Handlebar Controls (typical). The clutch hand lever (1) is located on the left handlebar and is operated with the fingers of the left hand.

1. Slowly pull clutch hand lever in against handlebar grip to fully disengage clutch.
2. Shift to first gear using the gear shifter lever. See Gear Shift Lever.
3. Slowly release the clutch hand lever to engage clutch.

A clutch switch is incorporated into the left handlebar switch assembly. It enables the rider to start the vehicle in any gear as long as the clutch lever is pulled in. If the clutch is not disengaged, the vehicle will not start when in gear.

Horn Switch

See Basic Handlebar Controls (typical). The horn is operated by pushing on the horn switch (2) located on the left handlebar control group.

Headlamp Dimmer Switch

See Basic Handlebar Controls (typical). The headlamp dimmer switch (3) is located on the left handlebar. The switch has two positions to activate the headlamps high or low beams.

- Press the top of the headlamp dimmer beam switch to activate the high beam.
- Press the bottom of the headlamp dimmer switch to return to the low beam.

See Indicator Lamps (Typical). The (blue) high beam indicator lamp will illuminate when the high beam is on.

Turn Signal Switches

See Basic Handlebar Controls (typical). Each handlebar control group contains a turn signal switch.

- The right turn signal switch (10) operates the right front and right rear flashing lamps.
- The left turn signal switch (4) operates the left front and left rear flashing lamps.

NOTE:

Front turn signal lamps also function as running lamps (except International models).

Audio/CB Control Switches

On equipped models, the audio/CB control switches (11) set up and operate functions within the Advanced Audio System.

For vehicles with an audio system, see Advanced Audio System for detailed operation.

Cruise Control Switches

On equipped models, the cruise control switches (12) automatically regulate the speed of the vehicle.

For vehicles with cruise control, see Cruise Control for detailed operation.

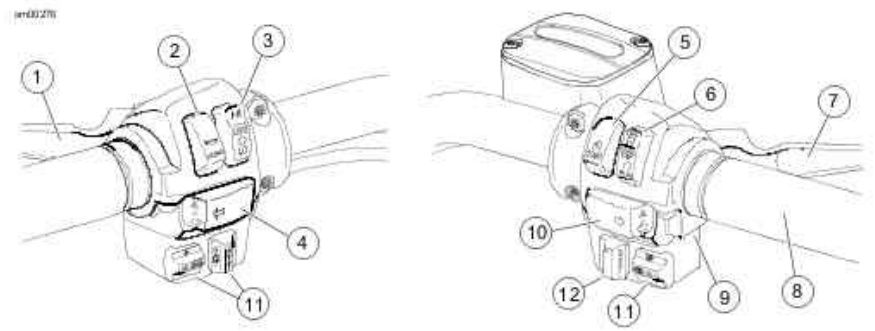

1. Clutch hand lever
2. Horn switch
3. Headlamp dimmer switch
4. Left turn signal switch
5. Electric starter switch
6. Engine off/run switch
7. Brake hand lever
8. Throttle control grip
9. Throttle friction adjusting screw (not shown, not used on cruise control models)
10. Right turn signal switch
11. Audio/CB switches (if equipped)
12. Cruise control switches (if equipped)

Basic Handlebar Controls (typical)

Heated Hand Grips

See Heated Hand Grips. Models with heated hand grips have a variable heat control dial located on the end of the left hand grip.

Rotate the control dial to align the desired setting with the arrow on the grip. The heat settings range from 1 (minimum) to 6 (peak). Rotate to the OFF icon to turn off heat.

The hand grips are thermostatically-controlled, providing a constant grip temperature regardless of changes in the outside temperature. To prevent battery drain, heated hand grips should only be used while the engine is running.

The sensor for thermostatic control is housed in the left hand grip. Maintaining consistent hand contact with both left and right hand grips will produce the most consistent results. If the hand grips are not producing heat, see Heated Hand Grips.

NOTE:

Allow approximately 20 minutes for grips to reach final operating temperature.

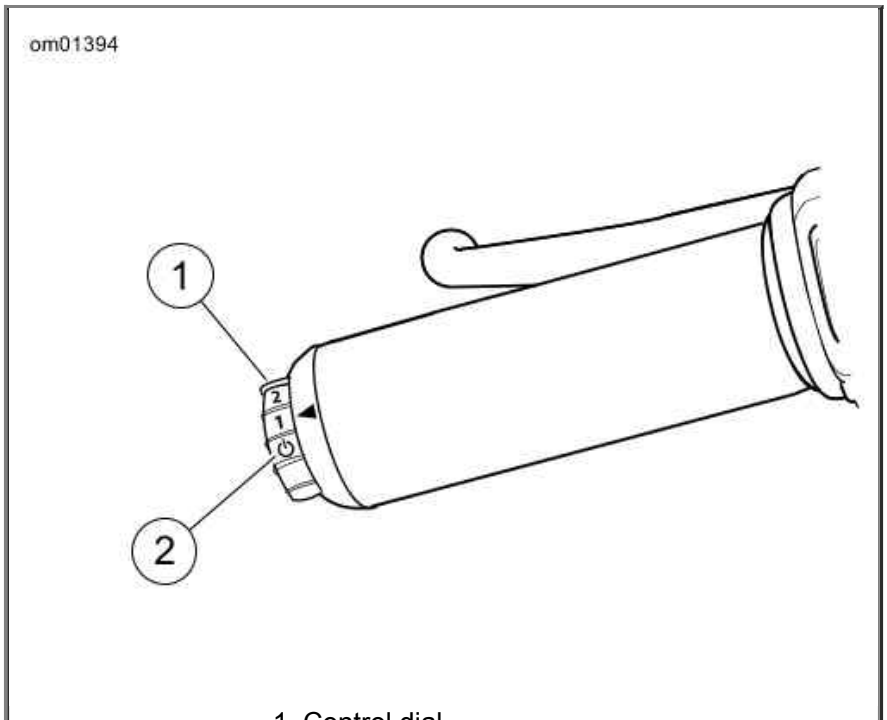

1. Control dial
2. Heat off

Heated Hand Grips

Electronic Throttle Control (ETC)

The motorcycle is equipped with Electronic Throttle Control (ETC). Instead of using a mechanical cable connection to the throttle body, this technology uses redundant grip sensors to indicate rider requested throttle position to the Electronic Control Module (ECM). The ECM then regulates proper fuel/air intake and ignition timing based on the rider request. The grip sensor is manufactured with internal cams and spring retainer for natural feel and operation.

In the event of a component failure, the ETC operation is designed for rider safety and continued motorcycle operation. The Electronic Control Module monitors the status of the grip sensors, throttle plate actuation and airflow. If any problems are detected, the motorcycle will disable cruise control, illuminate the check engine lamp, and revert to one of the following fallback modes.

ETC Limited Performance Mode

The rider will experience near-normal operation. The motorcycle will operate with provisions to guard against unintended acceleration.

ETC Power Management Mode

The throttle plate actuator returns to an "idle detent" or "limp-home" position, which will provide enough torque to achieve speed of about 25 mph 40 kph . The motorcycle's response to grip sensor input is significantly reduced.

ETC Forced Idle Mode

The throttle plate actuator is forced to a "fast idle" position, which will provide enough torque to crawl, but not enough torque to operate at traffic speeds.

ETC Forced Shutdown Mode

The engine is forced to shut down.

Turn Signal Switch Operation

Operating

Press and release the left or right turn signal switch to activate the turn signal lamps. The lamps flash until they are automatically canceled or manually canceled by the rider.

NOTE:

If a turn signal indicator flashes rapidly, a turn signal bulb is not operating. Exercise caution and use hand signals. Replace defective components at earliest opportunity.

Automatic Canceling

The turn signal lamps automatically cancel when a full turn has been detected (based on vehicle speed, vehicle acceleration, and turn completion).

The lamps also cancel if the turn signal has been activated for a prolonged period while the vehicle speed is greater than 7 mph 11 km/h . If the motorcycle is stopped or moving slower than this speed, the turn signal continues flashing.

Manual Canceling

To cancel the turn signal, press and release the turn signal switch a second time.

To activate the opposite turn signal, press and release the turn signal switch for the new direction. The first turn signal cancels and the opposite turn signal lamps begin flashing.

Hazard Warning

4-Way Flashers

Should it be necessary to park along side a roadway, 4-way flashers can be activated as a hazard warning to traffic.

Activate:

- Turn the ignition switch to IGNITION.
- Simultaneously press the left and right turn signal switches.
- Turn the ignition switch to the OFF or ACCESSORY position and lock.
- The flashers will continue for two hours.

Deactivate:

- Turn the ignition switch to IGNITION.
- Simultaneously press the left and right turn signal switches.

Instruments

Speedometer

⚠WARNING

Travel at speeds appropriate for road and conditions and never travel faster than posted speed limit. Excessive speed can cause loss of vehicle control, which could result in death or serious injury. (00008a)

See Instruments (Typical). The speedometer registers miles per hour (U.S. models) or kilometers per hour (international models) of forward speed. The speedometer also provides the following selectable functions:

- Odometer
- Trip odometers A and B
- 12 or 24 hour clock (if radio not installed)
- Fuel range function

The speedometer has a single display window for the above functions. If an Advanced Audio System is installed, the radio will provide the clock function.

1. See Instruments (Typical). Pressing the function switch with the ignition switch in any position will activate the odometer reading and time. Time and mileage/kilometers may be checked without unlocking ignition switch. Press and release function switch once to view odometer. Press and release switch again to display time.

2. To check mileage on trip odometers, the ignition switch must be in the ACC or IGNITION position. Press and release the function switch until the desired trip odometer reading is displayed. An A or B in the upper left of the display window identifies trip odometers.

3. To reset or zero trip odometers, have desired (A or B) odometer in display window. Press function switch and hold switch for 2-3 seconds. The trip odometer will be reset to zero.

4. Repeat the previous step if you wish to zero both trip odometers.

Setting Clock

If the motorcycle is equipped with an Advanced Audio System, see the Advanced Audio System section in this manual to set the clock in the radio.

1. Turn the ignition switch to ACC or IGNITION.

2. See Instruments (Typical). Press function switch until time (hour and minutes) is displayed. Press and hold the function switch for five seconds or until 12HR begins to blink in the speedometer display window. Release the button.

3. Press and release the function switch once to advance to a blinking 24HR or military style time display. Each time you press and release the button, the display will switch between 12HR and 24HR.

4. When the desired time style is displayed, press and hold the function switch for five seconds. The display will switch to the time display with the hours blinking.

   NOTE:

There is no AM or PM time setting required. So when correct hour is reached, press and hold function switch to advance to minute setting.

5. Press and release the function switch repeatedly to advance the hours. Each time you press and release the switch, the display will advance one hour.
6. When the correct hour is displayed, press and hold the function switch for five seconds. The minutes display will start blinking.
7. Press and release the function switch repeatedly to advance the minutes display. Each time you press and release the button, the display will advance one minute.
8. When the correct minutes are displayed, press and hold the function switch for five seconds. The minutes display will stop blinking, indicating that the clock has been set.
9. Turn the ignition switch OFF.

Tachometer

CAUTION

See OPERATING RECOMMENDATIONS section. Do not operate the engine above maximum safe RPM as shown under OPERATION (red zone on tachometer). Lower the RPM by upshifting to a higher gear or reducing the amount of throttle. Failure to lower RPM may cause equipment damage. (00159a)

See Instruments (Typical). The tachometer measures the engine speed in revolutions per minute (RPM).

Tip Indicator Lamp

⚠WARNING

If tip occurs, check all controls for proper operation. Restricted control movement can adversely affect the performance of the brakes, clutch or ability to shift, which could result in loss of vehicle control and death or serious injury. (00350a)

Should motorcycle be tipped over, the word "tip" will appear in the odometer window. Engine will not start until reset. To reset, cycle ignition switch ON-OFF-ON.

Fuel Gauge

The fuel gauge indicates the approximate amount of fuel in the fuel tank(s) and is located to left of the speedometer or on the left front panel of the fairing.

NOTE:

The FLHR left side fuel cap is a fuel gauge only. Do not remove.

Oil Pressure Gauge

Some vehicles are equipped with an oil pressure gauge. The oil pressure gauge indicates engine oil pressure and is located on the fairing front panel. Engine oil pressure will normally vary from 5 PSI 34 kN/m2 at idle speed to 30-38 PSI 207-262 kN/m2 at 2000 RPM when engine is at normal operating temperature of 230 °F 110 °C .

Voltmeter

Some vehicles are equipped with a voltmeter. The voltmeter indicates electrical system voltage and is located on the fairing front panel. With the engine running above 1500 RPM, the voltmeter should register 13.0-14.5 volts with battery at full charge.

Air Temperature Gauge

Some vehicles are equipped with an air temperature gauge. This gauge indicates the ambient air temperature in degrees Fahrenheit. The gauge is located on the fairing front panel.

Fuel Range Function

The fuel range function shows the approximate mileage available with the amount of fuel left in the fuel tank.

1. With the ignition switch in the ACC or IGNITION position, press function switch until fuel range function is displayed, as indicated by the letter 'r' in the left side of the odometer display. The calculated remaining distance (miles or kilometers) to empty is displayed, based on the amount of fuel in tank. Range can be accessed at any time using the function switch.

2. When the low fuel warning lamp illuminates, the range feature will automatically be displayed in the odometer unless this automatic pop-up feature is disabled by a press and hold of the function switch while in range display mode. Automatic range pop-up feature will show that it is disabled by blinking twice. Likewise, automatic range popup can be reactivated by a press and hold of the function switch. Range will blink once when the automatic pop-up feature is re-enabled.

   NOTE:
   - *When the low fuel warning lamp turns on, there is approximately 1.00 gallon 3.79 liters of fuel remaining in the tank. Refuel as soon as possible.*
   - *The range display is only updated when the vehicle is moving.*

3. After the range calculation reaches 10 miles 16 kilometers remaining, the range display will display "r Lo" to indicate that the vehicle will shortly run out of fuel.

4. Resetting the low fuel warning lamp and range requires an ignition cycle change.

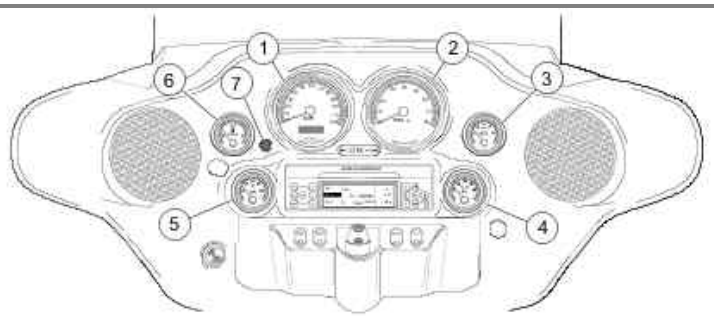

1. Speedometer
2. Tachometer
3. Voltmeter
4. Oil pressure
5. Air temperature
6. Fuel level
7. Function button

Instruments (Typical)

Instrument Lamps

Check Engine Lamp

See Instrument Lamps. The check engine lamp is located along the bottom of the speedometer face. Its purpose is to indicate whether the engine/engine management system is operating normally. The check engine lamp color is amber.

The check engine lamp normally comes on when the ignition is first turned on and remains on for approximately 4 seconds, as the engine management system runs a series of self-diagnostics.

If the check engine lamp comes on at any other time, see a Harley-Davidson dealer.

Low Fuel Lamp

See Instrument Lamps. The low fuel lamp is located in the speedometer face, lower center by check engine lamp. The low fuel lamp illuminates to indicate that you have approximately 1.0 gallon 3.8 liters of gasoline left in the tank. The low fuel lamp color is amber.

If the low fuel lamp remains lit after adding fuel or filling the fuel tank, see your Harley-Davidson dealer.

Battery Discharge Lamp

See Instrument Lamps. The red battery charging lamp indicates either overcharging or undercharging of the battery. Refer to Battery.

Cruise Control Equipped Models

Cruise control equipped models feature two additional indicator lamps.

- See Instrument Lamps. A green or orange lamp on the tachometer or speedometer face indicates the cruise control is SET (green) or NOT SET (orange).
- See Cruise Control Fairing Cap Switch. An orange lamp on the cruise control switch which indicates the cruise control is ON or OFF.

Sixth Gear Lamp

See Instrument Lamps. The sixth gear lamp on the speedometer face indicates when the transmission is in sixth gear.

Security System Lamp

See Instrument Lamps. The red security system lamp on the speedometer face indicates when the security system is armed. Refer to Harley-Davidson Smart Security System.

ABS Lamp

See Instrument Lamps. On ABS equipped models, the amber ABS indicator lamp begins to flash at key ON to indicate that the system is operational. It continues to flash until motorcycle speed exceeds 3 mph 5 km/h . Continuous illumination of the lamp will only occur when ABS detects that the system is malfunctioning. In the diagnostic mode, the lamp will also illuminate to indicate the presence of diagnostic trouble codes (DTCs). See a Harley-Davidson dealer for service.

⚠WARNING

If ABS lamp remains on continuously, the ABS is not

If ABS lamp remains on continuously, the ABS is not operating. The standard brake system is operational, but wheel lock up can occur. Contact a Harley-Davidson Dealer to have ABS repaired. A locked wheel will skid and can cause loss of vehicle control, which could result in death or serious injury. (00361a)

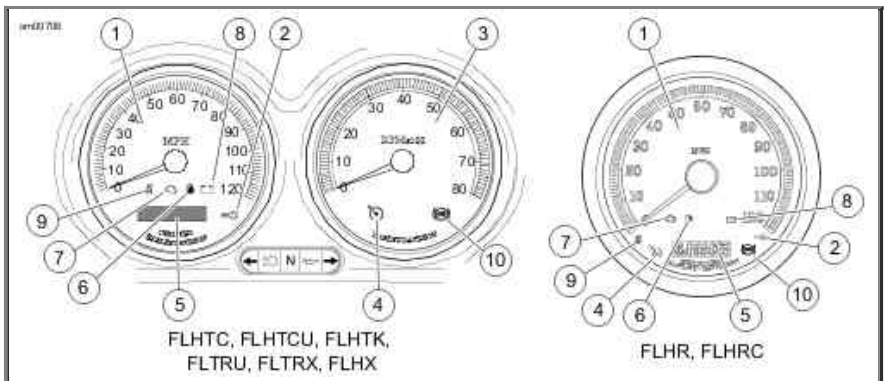

1. Speedometer
2. Security system lamp
3. Tachometer
4. Cruise lamp
5. Odometer/trip-odometer/clock
6. Low fuel warning lamp
7. Check engine lamp
8. Battery discharge lamp
9. Sixth gear lamp
10. ABS lamp

Instrument Lamps

Indicator Lamps

See Indicator Lamps (Typical). Five indicator lamps are provided in the instrument panel.

Turn Indicator Lamps

The turn indicators flash when a turn signal is activated. When the 4-way hazard flashers are operating, both turn indicators will flash simultaneously.

Headlamp High Beam Indicator Lamp

The headlamp high beam indicator lamp is lit when the high beam or flash to pass switch is activated.

Neutral Indicator Lamp

The neutral indicator lamp is lit when the transmission is in neutral gear.

Oil Pressure Indicator Lamp

The oil pressure indicator lamp is lit when sufficient oil is not circulating through the engine.

The lamp is lit when the ignition is turned on prior to starting engine. With engine running, lamp should be off when engine speed is above idle.

Circumstances that could cause the oil indicator lamp to illuminate:

- Low oil level. Stop engine immediately. Add oil.

- Diluted oil. Change oil as soon as possible.
- Incorrect oil for the operating temperature. Change oil as soon as possible.
- See Troubleshooting for further information.

CAUTION

If the oil pressure indicator lamp remains lit, always check the oil supply first. If the oil supply is normal and the lamp is still lit, stop the engine at once and do not ride further until the trouble is located and the necessary repairs are made. Failure to do so may result in engine damage. (00157a)

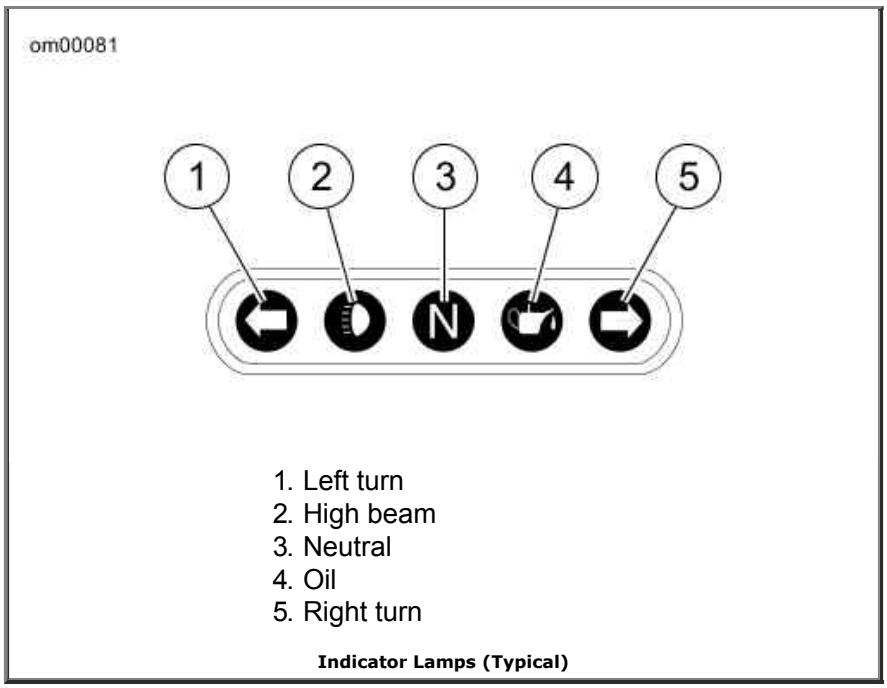

Indicator Lamps (Typical)

Cruise Control

NOTE:

Touring Models are either equipped with cruise control or are cruise control ready. See a Harley-Davidson dealer for more information.

Operating Controls

The cruise control system provides automatic vehicle speed control.

⚠WARNING

Do not use the cruise control system in heavy traffic, on roads with sharp or blind curves or on slippery roads of any kind. Using the cruise control in these circumstances can cause loss of control, which could result in death or serious injury. (00083a)

See Cruise Control Fairing Cap Switch. A fairing cap cruise control switch located to the right of the ignition switch turns the cruise control system ON and OFF. An orange lamp on the cruise control switch indicates the cruise control is ON.

See Cruise Control Switch FLHR Models. On FLHR models, the cruise control switch housing is on the left handlebar.

NOTE:

The cruise control icon on the speedometer or tachometer will turn orange to indicate the cruise control is ON. If the orange icon does NOT come on, the system is NOT ON. You cannot SET cruise speed, see your dealer.

See RESUME/SET Switch. RESUME/SET switch located in the right handlebar control group.

The RESUME/SET switch controls several system functions, including set, resume, accelerate and decelerate.

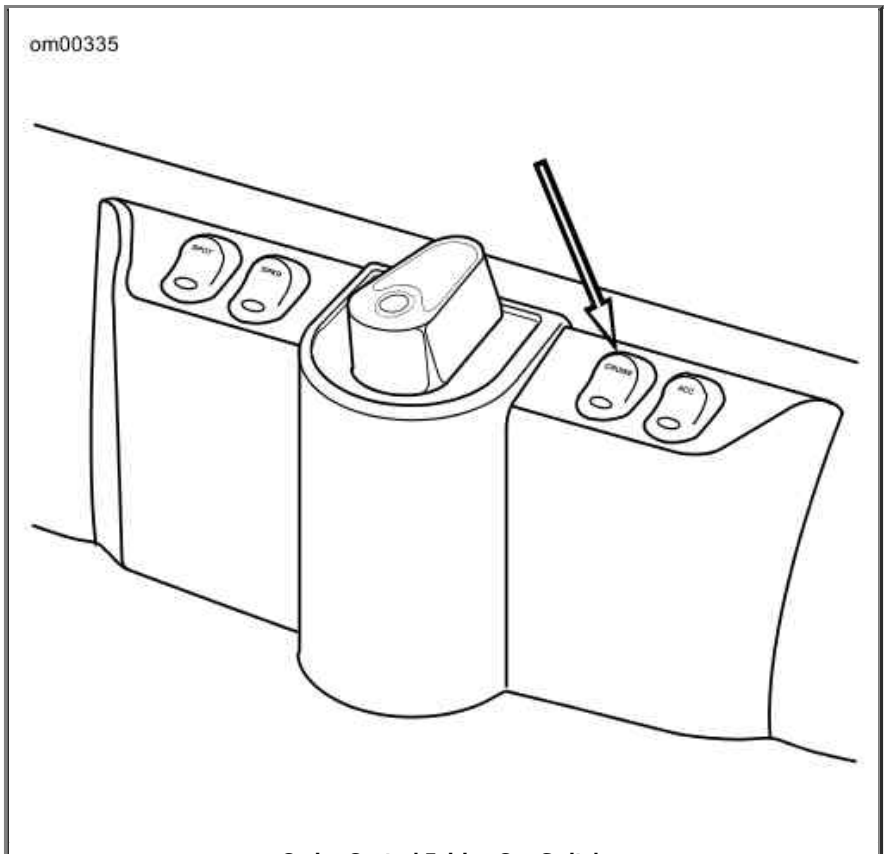

Cruise Control Fairing Cap Switch

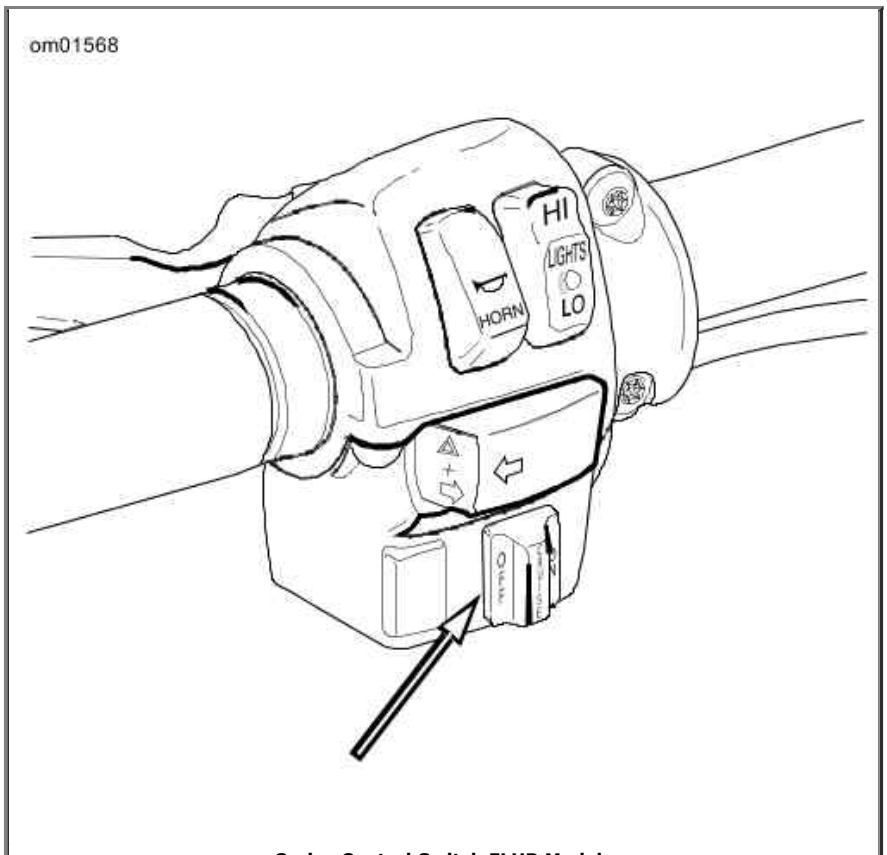

Cruise Control Switch FLHR Models

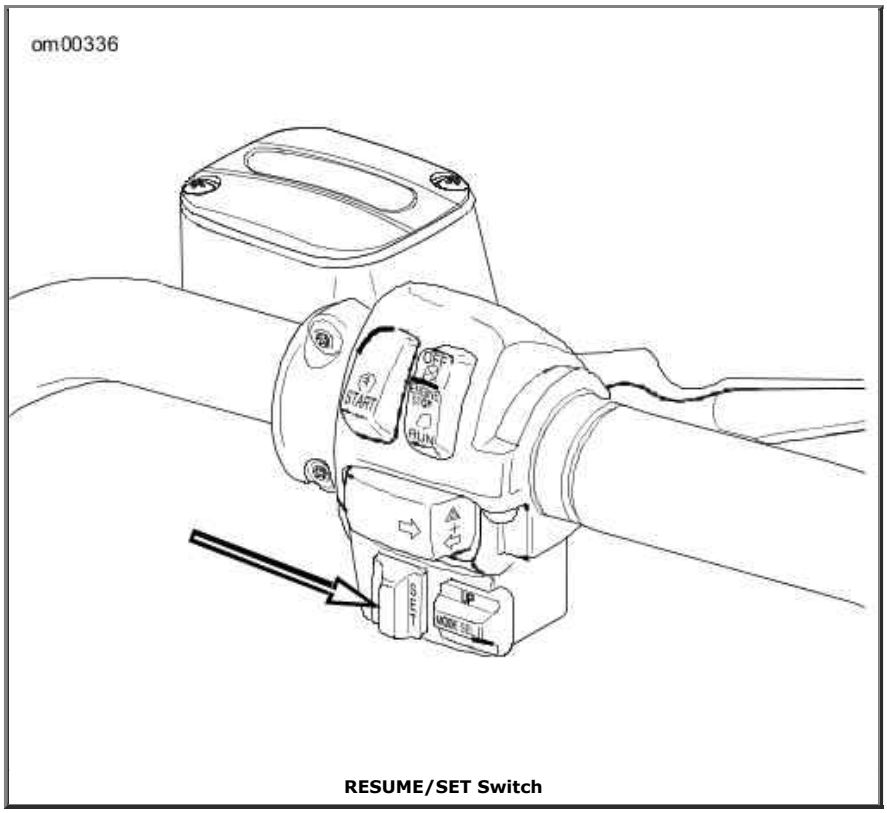

RESUME/SET Switch

Cruise Control Operation

Theory of Operation

The cruise control is designed to be safely operated with minimum movement by the rider and all rider control actions are natural and easy.

NOTES:

- *The rider always overrides and controls the system.*
- *The system will not work at vehicle speeds below 30 mph 48 km/h or above 90 mph 145 km/h .*
- *The system is managed by the ECM. The tachometer provides information to disengage the system if the engine RPM suddenly increases.*
- *The system also has other components: a stepper-motor (controlled by the computer) which operates the throttle during CRUISE operation, and several internal switches, all sending information to the computer.*
- *The system will allow rider to increase speed 10 mph 16 km/h or more (depending on how hard the rider rolls on the throttle and the condition of the vehicle) over the SET point before deactivating. This feature allows the rider to momentarily increase speed, if necessary. Rolling on the throttle to greatly increase speed may disengage the system.*

Engaging Cruise Control

NOTES:

System will NOT work if:

- *Rider operates at vehicle speeds below 30 mph 48 km/h or above 90 mph 145 km/h .*
- *Brake lamps are on constantly. See dealer.*

Non-specified tires or gearing may affect cruise control operation.

1. See Cruise Control Fairing Cap Switch. Push the CRUISE control ON/OFF switch to activate cruise control. The orange icon on the cruise gauge face will light when activated. See Instrument Lamps.

2. With the motorcycle traveling at the desired cruise speed of 30-90 mph 48-145 km/h ,

momentarily push the RESUME/SET switch on the right handlebar to SET. After a delay of about 1-1/2 seconds, the icon will turn green on the face of the gauge to indicate the selected cruising speed is locked in.

Disengaging Cruise Control

The cruise control automatically disengages whenever the cruise control module receives one of the following inputs:

1. Front and/or rear brake is applied.
2. Throttle is rolled back or closed, thereby actuating roll-off (disengage) switch.
3. Motorcycle clutch is disengaged (module senses too great an increase in RPM).
4. Vehicle speed is out of the operating range.

NOTE:

Rolling on the throttle more than 10 mph 16 km/h above the set speed may also disengage cruise control.

When the cruise is disengaged, the cruise icon on the face of the gauge is orange. The orange cruise control system icon remains ON until the main switch is turned off.

However, should you decide to SET a cruise speed, RESUME last set speed, ACCELERATE or DECELERATE, simply press the RESUME/SET switch in desired direction.

Resuming Cruise Speed

If the system is deactivated using one of the methods described under DEACTIVATING CRUISE CONTROL, the system is still ON should you decide to RESUME the set speed. To accomplish this, simply press the RESUME/SET switch to RESUME.

NOTE:

The computer will hold the SET speed in memory for the RESUME function. If the vehicle speed drops more than 15 mph 24 km/h below the SET speed, speed can no longer be RESUMED. If cruise operation is still desired, press the RESUME/SET switch to SET to reset the cruise speed.

Accelerating Cruise Speed

1. With the cruise speed set, momentarily press the RESUME/SET switch to RESUME to increase the speed by 1 mph 1.6 km/h .
2. Pressing and holding the RESUME/SET switch at RESUME will cause the system to continue to increase speed in increments of approximately 1 mph 1.6 km/h until the switch is released. There is a delay of about 2 seconds before the speed increases.

Decelerating Cruise Control

1. With the cruise speed set, momentarily press the RESUME/SET switch to SET to reduce the speed by 1 mph 1.6 kph .
2. Pressing and holding the RESUME/SET switch at SET will cause the system to continue to reduce speed in increments of approximately 1 mph 1.6 kph until the switch is released. There is a delay of about 2 seconds before the speed decreases.

Deactivating Cruise Control

Push the CRUISE switch to turn off cruise control. The orange icon in the gauge is extinguished to indicate the system is OFF.

Gear Shift Lever

Location

See Gear Shift Lever and Shift Pattern. The gear shift lever is located on the left side of the motorcycle and is operated with the left foot. The shift lever changes gears in a sequential six-speed transmission.

Shift Pattern

CAUTION

The clutch must be fully disengaged before attempting a gear shift. Failure to fully disengage the clutch can result in equipment damage. (00182a)

See Gear Shift Lever and Shift Pattern. Each gear must be engaged in sequence. Lift the gear shift lever to upshift and press the lever to downshift. After each gear change, release the gear shift lever to allow it to return to its resting position. See Shifting Gears.

Neutral

Neutral is located between first and second gear. The transmission can be shifted to neutral from either first or second gear. Lift or press the gear shift lever 1/2 of its stroke. In neutral, the indicator lamp will light.

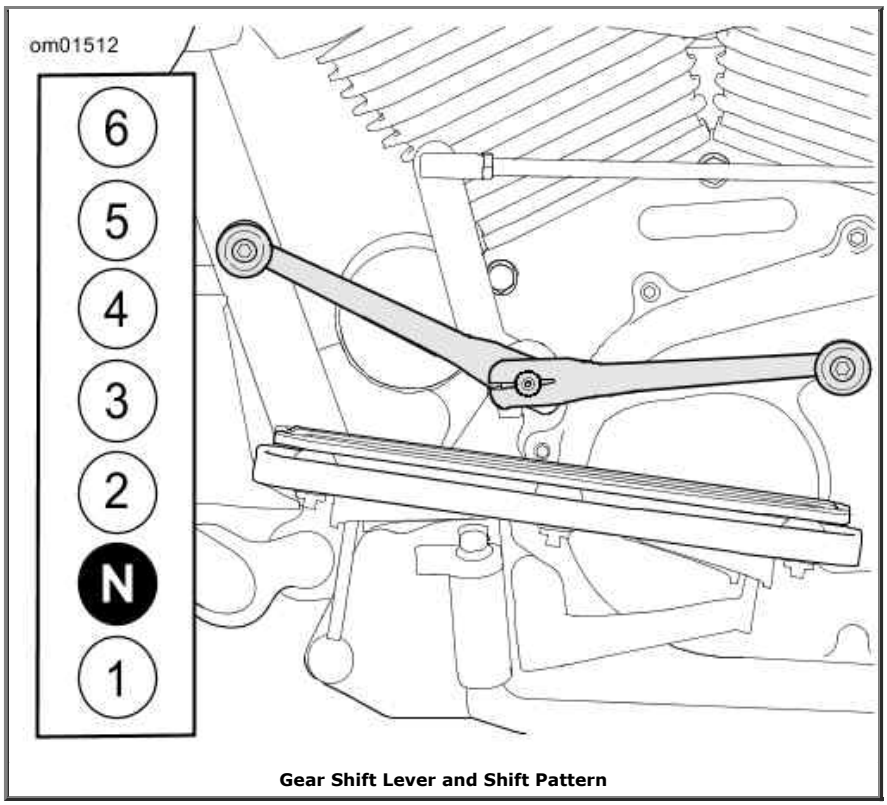

Gear Shift Lever and Shift Pattern

Heel-Toe Foot Shifter

See Heel-Toe Foot Shift Lever. Some motorcycles have a heel-toe shifter lever. With this shift lever, upshifts can be made with the heel of the left foot. Downshifts can be made with the toe.

- Pushing toe shift lever all the way down (full stroke) shifts the transmission to the next lower gear.
- Lifting the toe shift lever all the way up (full stroke) shifts the transmission into the next higher gear.
- Pushing the heel shift lever all the way down (full stroke) shifts the transmission to the next higher gear.

Release the foot shift lever after each gear change to allow the lever to return to its center position before another gear change.

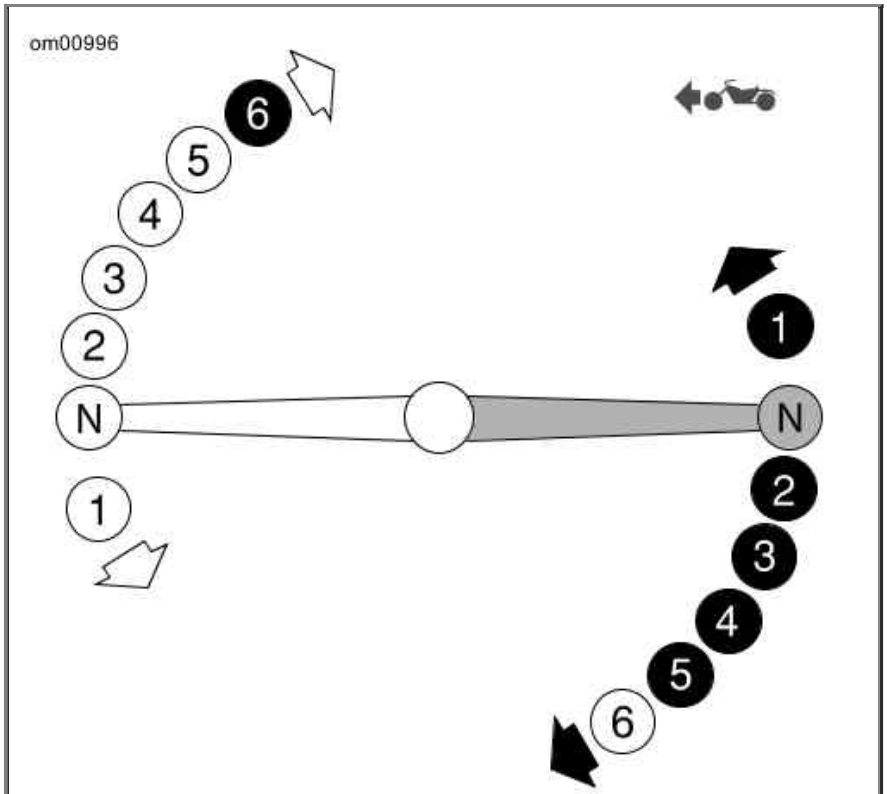

Heel-Toe Foot Shift Lever

Anti-Lock Brake System (ABS)

Identification

See Hydraulic Control Unit (behind right side cover). Models that are equipped with the ABS option can be identified by the presence of a hydraulic control unit as shown.

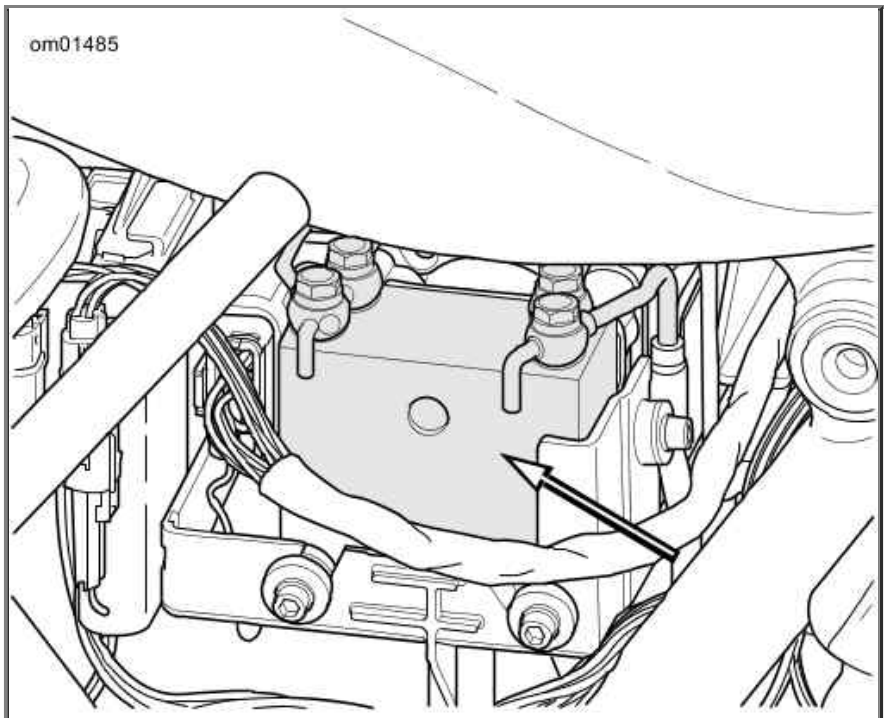

Hydraulic Control Unit (behind right side cover)

Brake System

General

The rear brake pedal controls the rear wheel brake and is located on the motorcycle's right side. Operate the rear brake pedal with the right foot.

The front brake hand lever controls the front wheel brake and is located on the right handlebar. Operate the hand lever with the fingers of the right hand.

⚠WARNING

Do not position fingers between hand control lever and handlebar grip. Improper hand positioning can impair control lever operation and cause loss of vehicle control, which could result in death or serious injury. (00032a)

Some models are equipped with an anti-lock braking system.

Non-ABS Brake System

Apply brakes uniformly and evenly to prevent wheels from locking. Use front and rear brakes equally for best results.

⚠WARNING

Do not apply brake strongly enough to lock the wheel. A locked wheel will skid and can cause loss of vehicle control, which could result in death or serious injury. (00053a)

Anti-Lock Brake System (ABS)

Harley-Davidson's Anti-Lock Brake System assists the rider in maintaining control when braking in a straight-line emergency situation. ABS operates independently on front and rear brakes to keep the wheels rolling and prevent uncontrolled wheel lock-ups either on dry pavement or on slick surfaces such as gravel, leaves or when riding in wet conditions.

ABS: How It Works

The ABS monitors sensors at the front and rear wheels to determine wheel speed. If the system detects one or both wheels are slowing down too quickly, which indicates they are close to locking, or if the deceleration rate does not match a criteria stored in memory, the ABS reacts. The system rapidly opens and closes valves to modulate the brake caliper pressure utilizing only the brake lever/pedal pressure being applied by the rider. During ABS activation, the system provides the electronic equivalent of manually pumping the brakes and is capable of cycling up to seven times per second.

The rider will recognize ABS activation by the slight pulsing sensation in the hand lever or the rear brake pedal. The pulsing sensation may also be accompanied by a clicking sound from the ABS module. Both are the result of normal operation. Refer to ABS Symptoms and Conditions.

ABS: How To Use

While an advantage in emergency braking, ABS is not a substitute for safe riding. The safest way to stop a motorcycle is upright with both wheels straight.

Harley-Davidson ABS is a manual assist system. When in an emergency stopping situation, maintain pressure on the brakes through all ABS events. Do not modulate or "pump" the brake controls. The wheels won't lock until the end of the stop when motorcycle speed reaches approximately 4 mph 6 km/h and ABS is no longer needed.

⚠WARNING

ABS cannot prevent lockup of rear wheel due to engine braking. ABS will not aid in cornering or on loose/uneven surfaces. A locked wheel will skid and can cause loss of vehicle control, which could result in death or serious injury. (00362a)

More information is available at www.harley-davidson.com/abs.

ABS: Tires and Wheels

ABS motorcycles must always use Harley-Davidson specified tires and wheels. The ABS monitors the rotational speed of the wheels through individual wheel speed sensors. Changing to different diameter wheels or different sized tires can alter the rotational speed. This can upset the calibration of the ABS and have an adverse effect on its ability to detect and prevent uncontrolled wheel lockups. Operating at tire pressures other than those specified in Specified Tires can reduce ABS braking performance.

ABS Symptoms and Conditions

SYMPTOM	CONDITION
Pulsing brake lever or pedal during an ABS event	Normal condition.
Clicking sound during an	Normal condition.

ABS event	
ABS lamp flashing	Normal condition - motorcycle turned on - speed under 3 mph 5 km/h .
"Surge" sensation while braking	Normal condition - most noticeable when braking with one brake (front only or rear only). Result of a reduction in deceleration which can be caused by cracks or bumps in road, engine braking (high engine RPMs causing the rear wheel to slow down), hard braking at slow speeds, and other conditions. This is due to ABS modulating caliper brake pressure to prevent uncontrolled wheel lock.
Temporarily stiff rear brake pedal	Normal condition - engine braking (high engine RPMs causing the rear wheel to slow down) or down shifting can activate ABS. If applying the rear brake at the same time or immediately after, the ABS may be closing a valve to prevent pressure to the rear brake. This is due to ABS modulating caliper brake pressure to prevent uncontrolled wheel lock.
Tire chirp	Normal condition - depending on surface, tire can chirp without locking the wheel.
Black mark on pavement	Normal condition - depending on surface, tire can leave a black mark without locking the wheel.
Wheel lock at low speed	Normal condition - ABS will not activate on front wheel below 3 mph 5 km/h or on rear wheel below 5 mph 8 km/h .

Jiffy Stand

⚠WARNING

Always park motorcycle on a level, firm surface. An unbalanced motorcycle can fall over, which could result in death or serious injury. (00039a)

The jiffy stand is located on the left side of the motorcycle and swings outward to support the motorcycle for parking.

⚠WARNING

The jiffy stand locks when placed in the full forward (down) position with vehicle weight on it. If the jiffy stand is not in the full forward (down) position with vehicle weight on it, the vehicle can fall over which could result in death or serious injury. (00006a)

⚠WARNING

Be sure jiffy stand is fully retracted before riding. If jiffy stand is not fully retracted, it can contact the road surface causing a loss of vehicle control, which could result in death or serious injury. (00007a)

Jiffy Stand Interlock: International Models

Some international models have a jiffy stand interlock.

The motorcycle will start and run with the jiffy stand down while the transmission is in neutral. If the jiffy stand is down and the transmission in gear, engaging the clutch stalls the motorcycle. The message "SidE StAnd" will scroll across the odometer. Raising the jiffy stand or putting the transmission in neutral, will permit the engine to run. The odometer will clear the message.

If the stand lowers at a speed greater than 10 mph 15 km/h , the engine will continue to run. It will illuminate the indicators (flash twice) and scroll the message "SidE StAnd" across the odometer. The message will remain until the system detects the jiffy stand in the fully retracted position again. The rider may continue to ride while in this mode.

The rider may clear the text messages at any time by pressing the function switch once while the vehicle is powered up.

Rear View Mirrors

⚠WARNING

Objects in mirrors are closer than they appear. Use caution when judging distance of objects in mirrors. Failure to judge correct distances could result in death or serious injury. (00033a)

Your vehicle is equipped with two convex rear view mirrors.

This type of mirror is designed to give a much wider view to the rear than a flat mirror. However, cars and other objects seen in this type of mirror will look smaller and farther away than they actually are.

- Use caution when judging the size or relative distance of objects seen in rear view mirrors.
- Always adjust the rear view mirrors to clearly reflect the area behind the motorcycle before riding.

NOTE:

Adjust mirrors so you can see a small portion of your shoulders in each mirror. This will help you establish the relative distance of vehicles to the rear of your motorcycle.

Fuel Filler Cap

⚠WARNING

Avoid spills. Slowly remove filler cap. Do not fill above bottom of filler neck insert, leaving air space for fuel expansion. Secure filler cap after refueling. Gasoline is extremely flammable and highly explosive, which could result in death or serious injury. (00028a)

CAUTION

Do not spill fuel onto the motorcycle while refueling. Immediately wipe up fuel spills on your motorcycle. Fuel can cause damage to cosmetic surfaces. (00147b)

CAUTION

Use only unleaded fuel in catalytic converter-equipped motorcycles. Using leaded fuel will damage the emission control system. (00150b)

To open, turn fuel filler cap counterclockwise and lift up. To close, turn fuel filler cap clockwise until it clicks. The ratchet action of the cap prevents overtightening.

NOTES:

- *See Fuel Tank: FLHR/FLHRC. On FLHR/FLHRC models, the fuel filler cap is located on the right side of the fuel tank. The cap on the left side is the fuel gauge and is not removable.*

- *See Fuel Door. On all other models, the fuel filler cap is located beneath a locking door. Use the ignition key to unlock fuel door. The fuel filler cap should be fully closed before closing the fuel door.*

See Safe Operating Rules and review safety procedures listed below.

⚠WARNING

Do not store motorcycle with gasoline in tank within the home or garage where open flames, pilot lights, sparks or electric motors are present. Gasoline is extremely flammable and highly explosive, which could result in death or serious injury. (00003a)

⚠WARNING

Do not use aftermarket fuel caps. Aftermarket fuel caps may fit improperly and leak, which could lead to death or serious injury. See a Harley-Davidson dealer for approved fuel caps. (00034a)

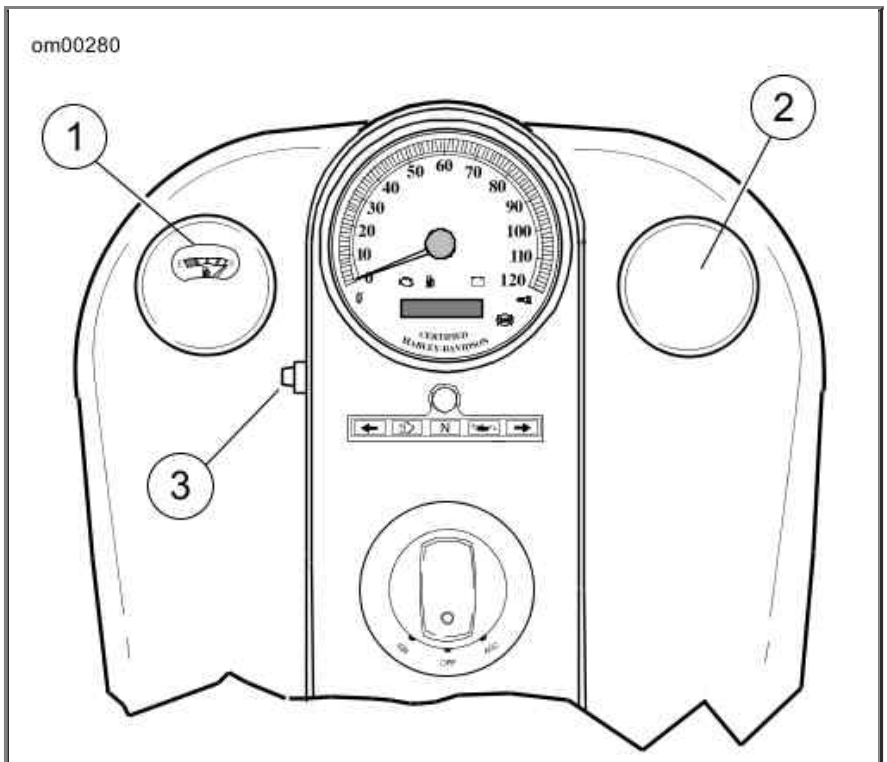

1. Fuel gauge
2. Fuel filler cap
3. Function switch

Fuel Tank: FLHR/FLHRC

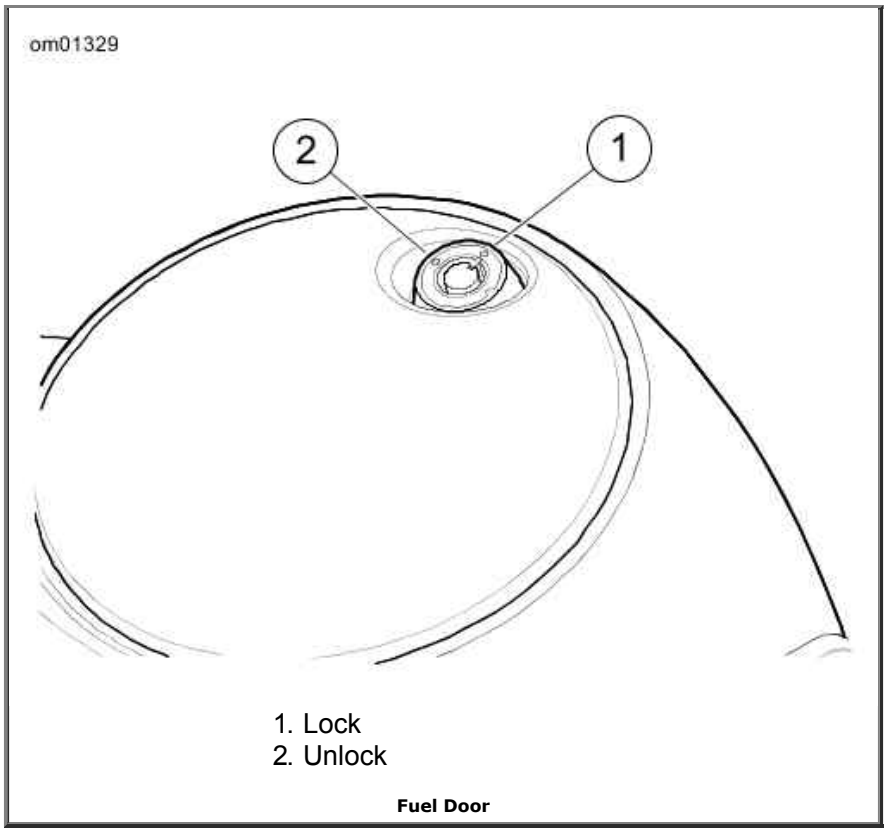

Fuel Door

Rear Suspension

All models have adjustable rear suspension.

The air adjustable rear suspension is installed on all models except FLHX and FLTRX international models. FLHX and FLTRX international models use a knob located on the left rear shock for shock absorber preload adjustment.

Rear Air Suspension

All models feature air-adjustable rear suspension except FLHX and FLTRX international models. Air pressure in the rear shock absorbers may be adjusted to suit load requirements, riding style and personal comfort.

CAUTION

Do not exceed maximum air pressure for suspension. Air components fill rapidly. Therefore, use low air line pressure. Failure to do so can result in possible damage to components. (00165b)

⚠WARNING

Use caution when bleeding air from the suspension. Moisture combined with lubricant may leak onto the rear wheel, tire and/or brake components and adversely affect traction, which could result in death or serious injury. (00084a)

1. Remove the left saddlebag, if present.
2. See Rear Suspension Air Valve. Remove the cap from the air valve located behind the shock absorber on the left side of the vehicle.

   NOTES:
   - *Always add 3-5 psi 21-35 kPa to the existing pressure before releasing air from the*

system to prevent oil for exiting the air valve. NEVER exceed 50 psi 345 kPa .
- *Do not exceed maximum GVWR or GAWR.*

3. Refer to Recommended Suspension Air Pressure: Models Without Tour-Pak and Recommended Suspension Air Pressure: Models With Tour-Pak. Attach AIR SUSPENSION PUMP AND GAUGE HD-34633 to the air valve. Fill or release air from the shock absorber to the pressure specified for your model motorcycle and load.

   NOTE:

   The specified pressures are recommended starting points. Adjust pressure to suit load conditions, riding style and comfort desired. Less pressure does not necessarily result in a softer ride. Using pressures outside the recommended loading range will result in a reduction of available suspension travel and reduced rider comfort.

4. Install cap on air valve and install left saddlebag, if removed.

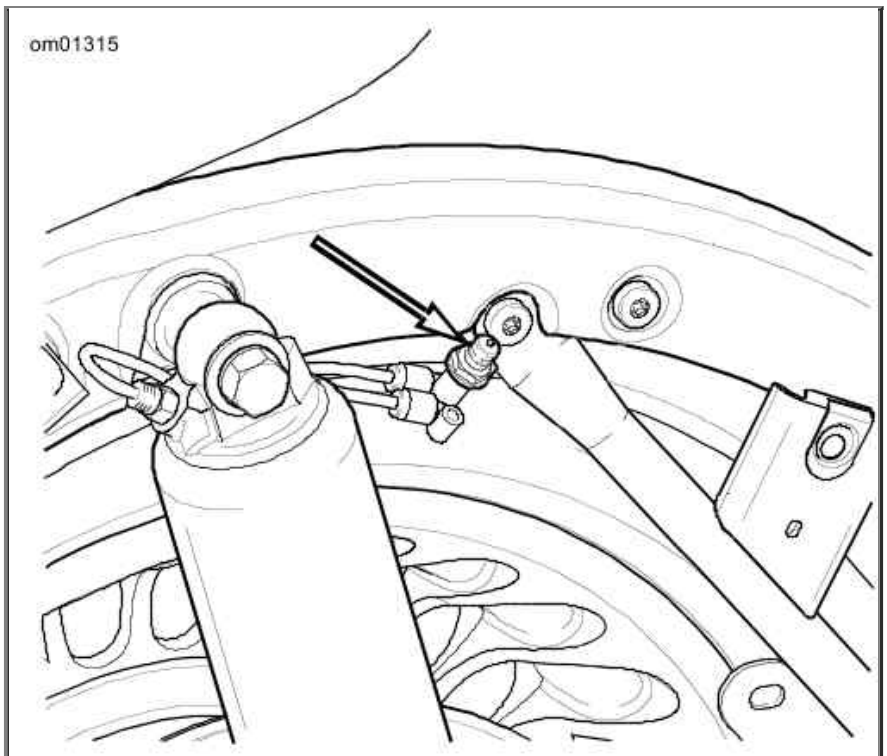

Rear Suspension Air Valve

Recommended Suspension Air Pressure: Models Without Tour-Pak

SHOCK LOAD	TOTAL WEIGHT	PRESSURE	
		PSI	kPa
Solo rider	up to 150 lb 68 kg	0	0
	150-200 lb 68-91 kg	0-10	0-69
	200-250 lb 91-113 kg	10-20	69-138
	250-300 lb 113-136 kg	20-30	138-206
	300 lb 136 kg to maximum added weight allowed*	30-50	206-345
Solo rider with capacity luggage of 40 lbs 18 kg	up to 150 lb 68 kg	10-20	69-138
	150-200 lb 68-91 kg	20-30	138-206
	200-250 lb 91-113 kg	30-40	206-276
	250-300 lb 113-136 kg	40-50	276-345

	300 lb 136 kg to maximum added weight allowed*	50	345
Rider plus passenger	Any weight up to maximum added weight allowed*	40-50	276-345
Maximum loaded vehicle	Maximum added weight allowed*	50	345
If an optional Tour-Pak is installed, add 5-10 psi 34-69 kPa to shock pressure. Do **not** exceed 50 psi 345 kPa suspension pressure. *Refer to Weights: FLHR, FLHRC, FLTRX, FLHX for maximum added weight allowed on the motorcycle.			

Recommended Suspension Air Pressure: Models With Tour-Pak

SHOCK LOAD	TOTAL WEIGHT	PRESSURE	
		PSI	kPa
Solo rider	up to 150 lb 68 kg	5-10	34-69
	150-200 lb 68-91 kg	10-20	69-138
	200-250 lb 91-113 kg	20-30	138-206
	250-300 lb 113-136 kg	30-40	206-276
	300 lb 136 kg to maximum added weight allowed*	40-50	276-345
Solo rider with capacity luggage of 70 lbs 32 kg	up to 150 lb 68 kg	25-30	172-206
	150-200 lb 68-91 kg	30-40	206-276
	200-250 lb 91-113 kg	40-50	276-345
	250 lb 113 kg to maximum added weight allowed*	50	345
Rider plus passenger	Any weight up to maximum added weight allowed*	50	345
Maximum loaded vehicle	Maximum added weight allowed*	50	345
Do **not** exceed 50 psi 345 kPa suspension pressure. *Refer to Weights: FLHTC, FLHTCU, FLHTK, FLTRU for maximum added weight allowed on the motorcycle.			

Shock Absorber Preload Adjustment

The shock absorber preload can be adjusted for the weight the motorcycle is to carry on FLHX and FLTRX international models. Increase preload to accommodate the total load on the motorcycle. Reduce the preload if carrying less weight.

1. Remove the left saddlebag. See Hard Saddlebags.
2. See Preload Adjustment Knob. Rotate the preload adjustment knob counterclockwise until it stops. This is the minimum preload position.
3. Refer to Recommended Preload Settings. Rotate the preload adjustment knob clockwise the recommended number of turns to increase the preload for the total weight of the rider, passenger and cargo. The knob will click at each half turn.

4. Install the left saddlebag.

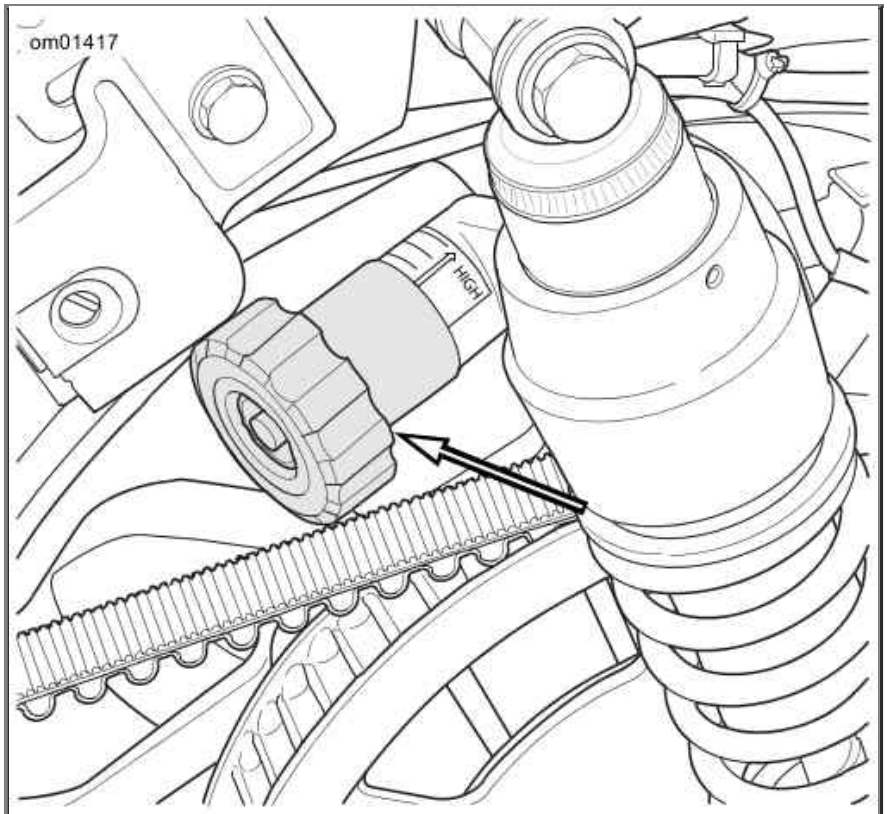

Preload Adjustment Knob

Recommended Preload Settings

PRELOAD TURNS FROM MINIMUM	LOAD	PRELOAD TURNS FROM MINIMUM	LOAD
0	Less than 220 lb 100 kg	10	310 lb 141 kg
1	220 lb 100 kg	11	320 lb 145 kg
2	230 lb 104 kg	12	330 lb 150 kg
3	240 lb 109 kg	13	340 lb 154 kg
4	250 lb 113 kg	14	350 lb 159 kg
5	260 lb 118 kg	15	360 lb 163 kg
6	270 lb 122 kg	16	370 lb 168 kg
7	280 lb 127 kg	17	380 lb 172 kg
8	290 lb 132 kg	18	390 lb 177 kg
9	300 lb 136 kg	19	400 lb 181 kg to maximum added weight allowed (refer to Weights: FLHR, FLHRC, FLTRX, FLHX)
Load includes the total weight of the rider, passenger, riding gear, accessories and cargo.			

⚠WARNING

Do not exceed the motorcycle's Gross Vehicle Weight Rating (GVWR) or Gross Axle Weight Rating (GAWR). Exceeding these weight ratings can lead to component failure and adversely affect stability, handling and performance, which could result in death or serious injury. (00016f)

GVWR is the sum of the weight of the motorcycle, accessories, and the maximum weight of the rider, passenger and cargo that can be safely carried.

GAWR is the maximum amount of weight that can be safely carried on each axle.

The GVWR and GAWR is shown on the information label, located on the frame steering head.

Make sure all storage compartments are secure before operating motorcycle.

Adhere to the weight limits and loading instructions on the labels within the storage compartments.

Tour-Pak

Operation

See Tour-Pak Lock and Draw Catch. Some models are equipped with a lockable Tour-Pak. To open, unlock the Tour-Pak lock with the ignition key and open the draw catches.

Removal/Installation

⚠CAUTION

Do NOT pull on any electrical wires. Pulling on electrical wires may damage the internal conductor causing high resistance, which may result in minor or moderate injury. (00168a)

The Tour-Pak can be installed in the forward or rearward position. See the service manual or a Harley-Davidson dealer for Tour-Pak removal/relocation.

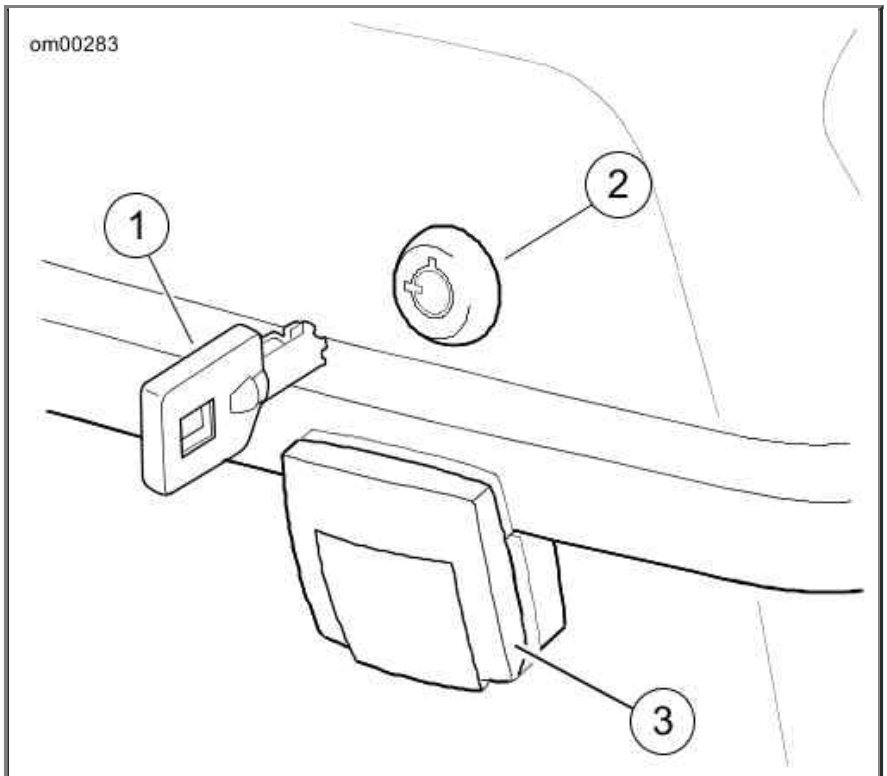

1. Key
2. Lock
3. Draw catch

Tour-Pak Lock and Draw Catch

Leather Saddlebags

Opening

See Saddlebag Quick Disconnect. To use the quick disconnect strap feature, lift up the strap end to expose the quick release buckle and press on the lock tabs as shown.

The straps may also be opened and closed using the buckle in a conventional manner.

Closing

Insert the male strap end into the receptacle on the bag and push until a positive "click" is felt.

NOTE:

See Leather and Vinyl Care for proper saddlebag care.

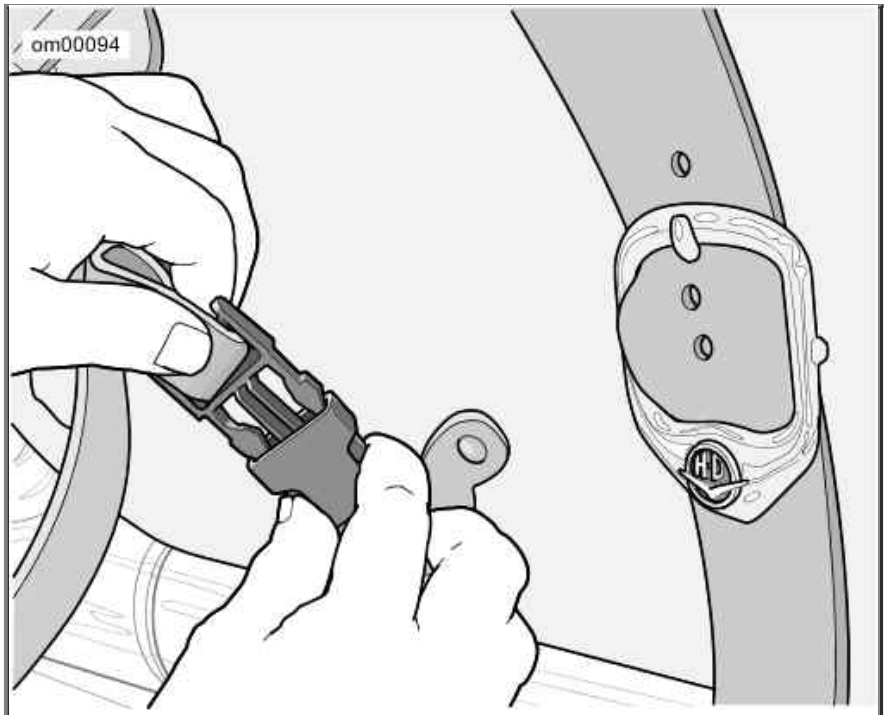

Saddlebag Quick Disconnect

Hard Saddlebags

Opening

1. See Hard Saddlebags. Unlock latch using ignition key.
2. Place fingers under latch and lift.
3. Place one hand at OUTSIDE CORNER of cover and other hand at opposite outside corner.
4. Lift outside edge of cover, pivoting inside edge of cover in brackets.
5. Lift inside edge of cover to disengage brackets.
6. Bring cover towards you, over saddlebag.
7. As you bring cover toward you, let it flip over, so the inside faces up. Let cover rest against rub bars and nylon check strap.

NOTE:

The saddlebag lids are designed to stay attached to the bags at all times.

Closing

1. See Hard Saddlebags. Use both hands to hold OUTSIDE corners of cover up and slide inside edge back into place so brackets slide together.
2. Close lid and secure latch. Brackets will engage automatically.

NOTE:

Saddlebag latch and Tour-Pak draw catches should be closed and locked whenever motorcycle is in operation.

Removing

See Hard Saddlebags. The saddlebags are secured to the support brackets by 1/4 turn

fasteners called bail head studs.

NOTE:

If your vehicle (international only) does not have the wire form "bail", use a flat bladed screwdriver to turn the studs.

1. Rotate bail head studs 1/4 turn counterclockwise.
2. Remove saddlebag.

Installing

Carefully place saddlebag in position on saddlebag rail and align the bail head studs with the support bracket fasteners.

1. See Hard Saddlebags. Fasten studs by pushing into support bracket fasteners and turning 1/4 turn clockwise.
2. Check that studs are securely fastened.

Adjustments

If the latches become loose, you can adjust the latch fingers.

CAUTION

Adjust the latch fingers only enough to enable them to properly engage the latch hinge. Bending latch fingers back and forth can overstress the metal and weaken the fingers. (00169a)

1. Bend the fingers until they firmly engage the hinge.
2. See Miscellaneous Lubrication for lubrication details.

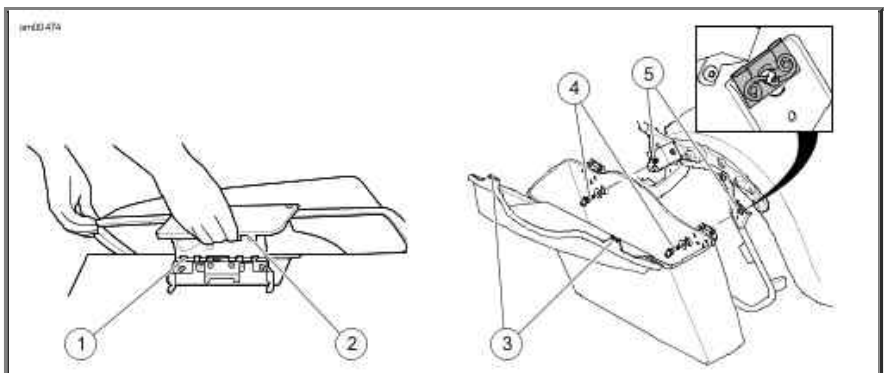

1. Hinge
2. Latch
3. Anchor tabs
4. Bail head studs
5. Support brackets

Hard Saddlebags

Windshield: FLHR/C

Removal

1. See Windshield: FLHR/C. Lift the wire form latch springs at either side of the windshield

and move the TOP of the windshield assembly forward, until the TOP bracket notches slide away from the grommets.

2. Carefully lift the windshield bracket BOTTOM notches off the bottom grommets.

3. Remove windshield.

NOTE:

For proper windshield maintenance, see Windshield Care.

Installation

1. See Windshield: FLHR/C. Lift the wire form latch springs at either side of the windshield and slide the BOTTOM windshield bracket notches onto the bottom grommets.

2. Slide the TOP bracket notches onto the top grommets.

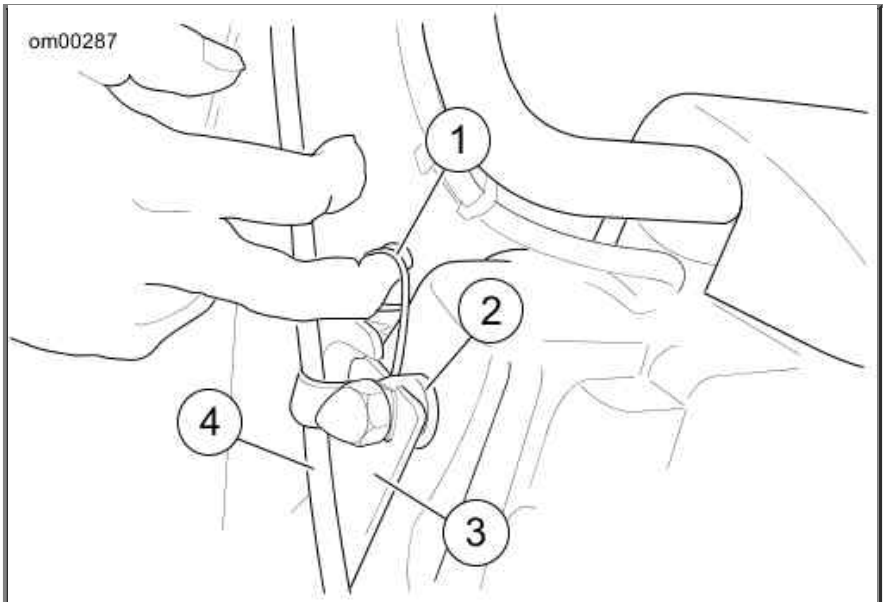

1. Wire form latch spring
2. Grommet
3. Windshield
4. Clutch cable

Windshield: FLHR/C

Adjustable Air Deflectors

See Adjustable Air Deflector. Some models are equipped with adjustable air deflectors located along the left and right bottom edge of the fairing. These deflectors can be rotated to direct airflow for rider and passenger comfort.

To adjust, grasp the outer edge of the deflector and pivot to the desired position.

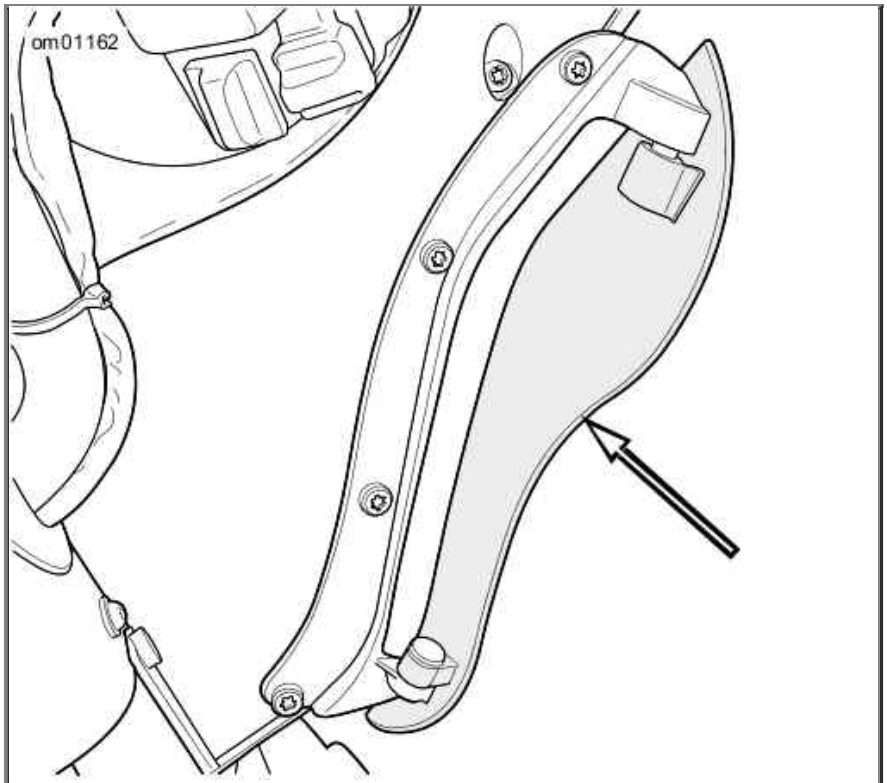

Adjustable Air Deflector

Cigarette Lighter

CAUTION

Do not use cigarette lighter socket to power electrical devices. Automotive electrical plugs can damage the socket, which can result in improper lighter operation and overheating that could cause equipment damage. (00599b)

See Cigarette Lighter. Some models are equipped with a cigarette lighter. The lighter is located on the left side of the fairing. To operate, press lighter into socket. The lighter will pop out when hot.

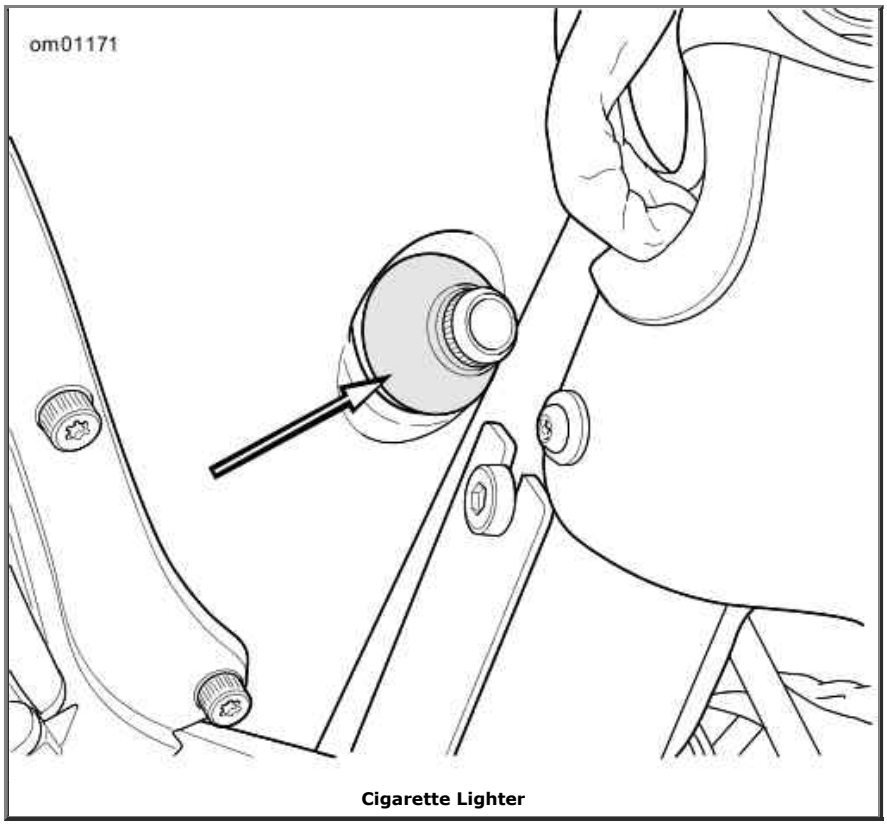

Cigarette Lighter

Accessory Switch

The accessory switch controls power to the accessory connector under the seat. See a Harley-Davidson dealer for electrical accessories that may be purchased and installed on the motorcycle.

See Nacelle Switches: FLHR/FLHRC. On FLHR/FLHRC models, the accessory switch is on the left side of the nacelle.

See Switch Indicators. On all other models, the accessory switch is on the right side of the fairing cap.

CAUTION

It is possible to overload your vehicle's charging system by adding too many electrical accessories. If the combined electrical accessories operating at any one time consume more electrical current than the vehicle's charging system can produce, the electrical consumption can discharge the battery and cause damage to the vehicle's electrical system. See an authorized Harley-Davidson dealer for advice about the amount of current consumed by additional electrical accessories or for necessary wiring changes. (00211c)

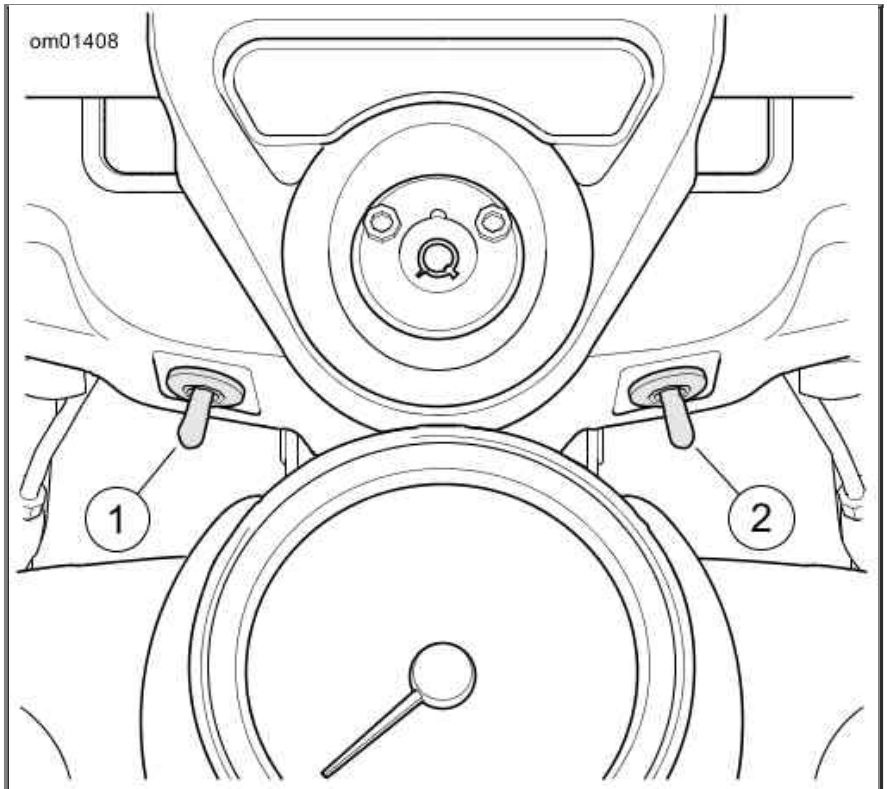

1. Accessory switch
2. Auxiliary/Fog lamps (SPOT) switch

Nacelle Switches: FLHR/FLHRC

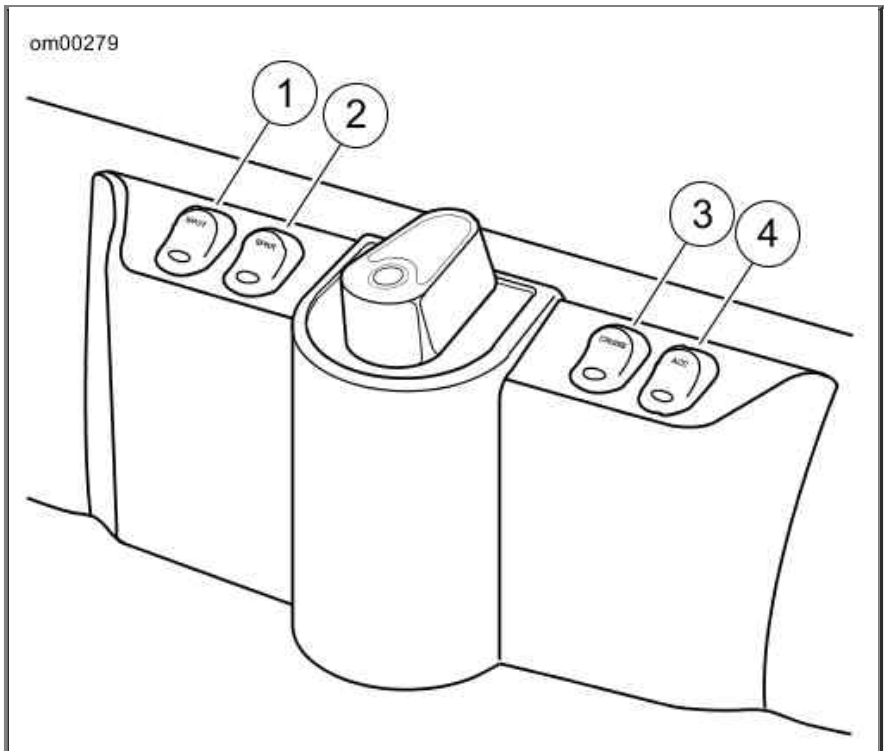

1. Auxiliary/Fog (SPOT)
2. Speakers
3. Cruise control
4. ACC switch (ACCESSORY)

Switch Indicators

Auxiliary/Fog Lamps

Use the auxiliary/fog lamp switch to turn on the auxiliary/fog lamps as needed. When the high beam headlamp is turned on, the auxiliary/fog lamps automatically turn off, except for Japan

market motorcycles. The auxiliary/fog lamps remain ON with both the low beam and high beam headlamp for Japan market motorcycles.

See Nacelle Switches: FLHR/FLHRC. On FLHR/FLHRC models, the switch is located on the right side of the nacelle.

See Switch Indicators. On all other models equipped with auxiliary/fog lamps, the switch is located on the left side of the ignition switch on the fairing cap.

Fairing Lower Vents

Some models are equipped with fairing lowers. The fairing lowers block wind and water from the rider legs, and include a compartment for storing small items.

See Fairing Lower Vent Control. Vents in fairing lowers are controlled by the lever shown. Adjust vent openings to control air flow.

Fairing lowers may be removed in warmer ambient temperature to increase rider and passenger comfort.

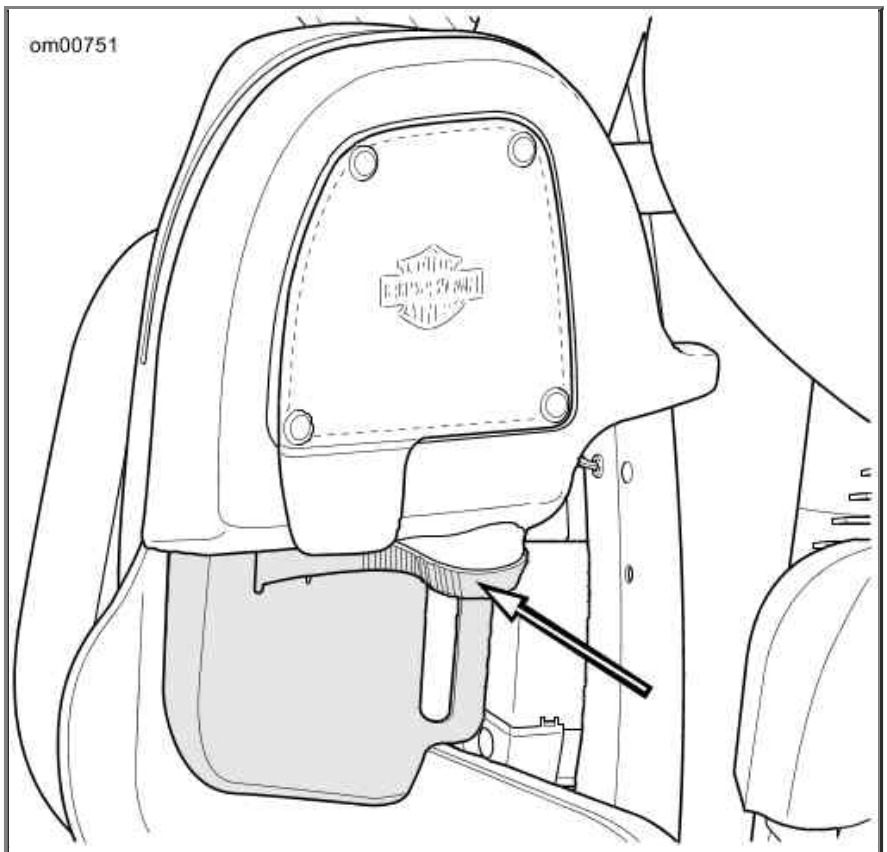

Fairing Lower Vent Control

Passenger Footboards/Footrests

Passenger footboards/footrests can be adjusted to one of three positions. Before moving to a new position, remove plastic plugs from holes in the footrest mount in the frame as necessary.

1. See Passenger Footboard/Footrest (typical). Remove socket screw with lockwasher from top of footboard/footrest bracket. Do not remove lower screw from footboards.
2. Place bracket at the desired position. Insert pin (on footrest bracket only) into mount hole.
3. Install socket screw with lockwasher. Apply a drop of Loctite Threadlocker 243 (blue) to the threads. Tighten socket screw to 36-42 ft-lbs (49-56 Nm).

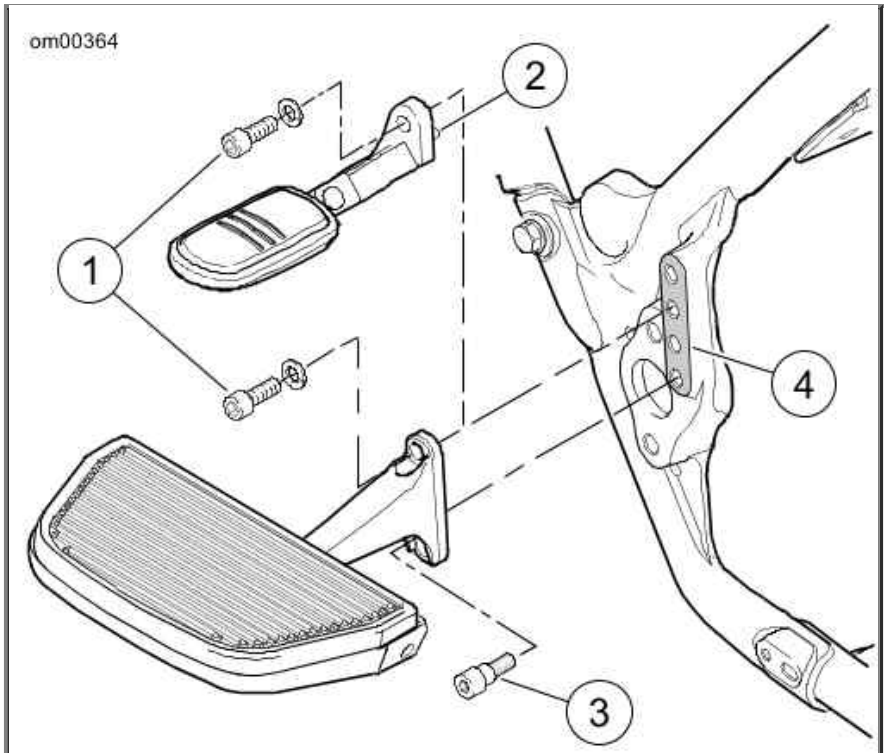

1. Screw with lockwasher
2. Pin (footrest only)
3. Lower screw (footboard only, do not remove)
4. Footrest/footboard mount on frame

Passenger Footboard/Footrest (typical)

Auxiliary Power Outlet

See Auxiliary Power Outlet. Some models are equipped with an auxiliary power outlet in the Tour-Pak. This outlet may be used to power or charge 12 VDC electrical accessories. The outlet is on a fuse-protected circuit that can support devices rated up to 15 amps.

Power is supplied to the outlet only while the ignition switch is in the IGNITION or ACCESSORY position. Raise the spring-loaded protective cover on the outlet to plug in a standard 12 VDC automotive accessory plug.

NOTE:

Items charging with the power outlet may cause interference with radio reception.

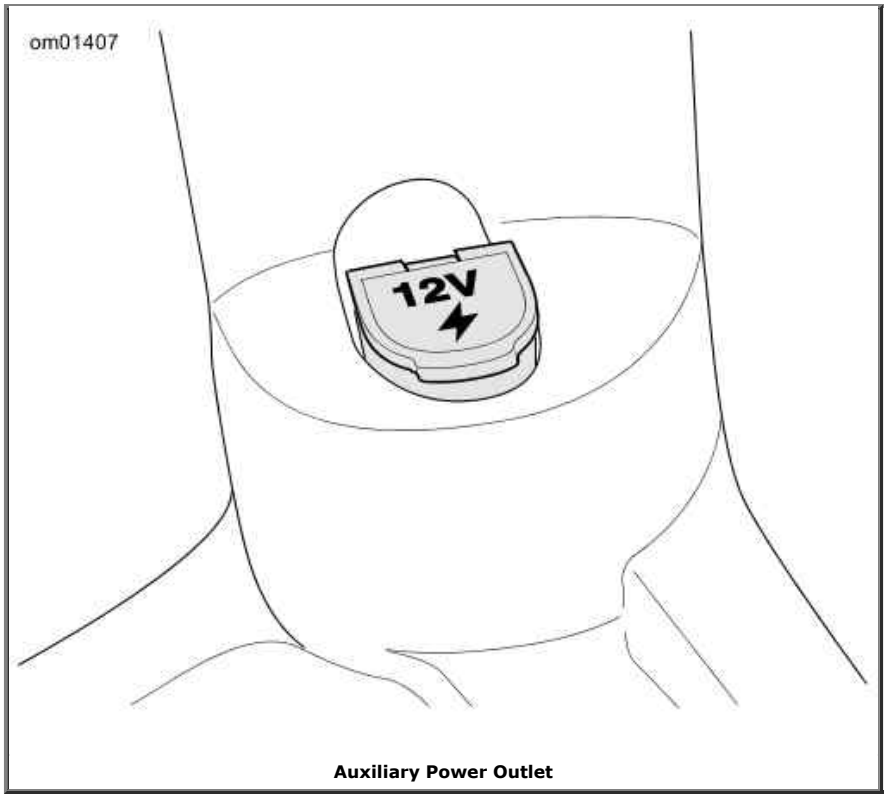

Auxiliary Power Outlet

Advanced Audio System

Advanced Audio System

The Advanced Audio System by Harman/Kardon® is based on an electronic unit mounted inside the front fairing of selected Harley-Davidson Touring models.

The Advanced Audio System is a multi-band radio receiver that includes a Compact Disc (CD)/MP3 player and an auxiliary (AUX) port for media players. The receiver is stereo and plays through left and right speakers mounted in the rider fairing. The Advanced Audio receiver also supports additional passenger speakers, a rider/passenger intercom and a 40 channel Citizen Band (CB) radio transceiver.

⚠WARNING

Do not change compact discs while riding, and do not select a volume level that blocks out traffic noise. Distractions or a volume level that blocks out traffic noise, could cause loss of control resulting in death or serious injury. (00086a)

CAUTION

There are no serviceable parts inside the unit; leave all servicing to qualified service personnel. Disassembly of the unit could result in equipment damage and/or equipment malfunction. (00172a)

⚠WARNING

Do not disassemble unit. Laser radiation is present if disc player is disassembled and the interlock fails or is defeated. Exposure to laser radiation could lead to death or serious injury. (00087a)

⚠WARNING

Set volume levels and other controls on audio and electronic devices before riding. Distractions can lead to loss of control, resulting in death or serious injury. (00088b)

Advanced Audio System Features

Advanced Audio System Modules

MODULE	FLHX, FLHTC, FLTRX	FLHTCU, FLHTK, FLTRU
AM/FM stereo receiver	X	X
CD/MP3 player	X	X
Weather band	X	X
Weather band alert	-	X
Citizen Band (CB) radio	-	X
Intercom	-	X
Passenger controls	-	X
Rear speakers	-	X
X = Standard equipment - = Not equipped		

Audio System Quick Start Guide

See the remaining information in this section for detailed information on all the features for the Advanced Audio System.

⚠WARNING

Do not change compact discs while riding, and do not select a volume level that blocks out traffic noise. Distractions or a volume level that blocks out traffic noise, could cause loss of control resulting in death or serious injury. (00086a)

⚠WARNING

Set volume levels and other controls on audio and electronic devices before riding. Distractions can lead to loss of control, resulting in death or serious injury. (00088b)

Radio Receiver

1. See Advanced Audio System Front Panel. With the ignition switch in IGNITION or ACCESS, press the **ON** button (10).

2. **Adjust Volume:** See Left Hand Audio Controls (typical). Adjust volume with the the **AUDIO** switch (1) on the left hand grip. Push **AUDIO** switch up (+) to raise the volume or down (-) to lower the volume.

3. **Manual Tuning:** Press and hold the **Up Arrow** or **Down Arrow** until the desired radio frequency is displayed in the LCD (8).

4. **Preset Tuning:** Manually tune the radio to the desired station. Push and hold any one of the five soft keys (7 or 9).

Compact Disc (CD) Player

1. See Advanced Audio System Front Panel. Turn radio receiver ON, raise the CD door (2) and gently insert a CD with the label side up. The unit will automatically pull the CD into the player. Close the CD door.

2. **Change Tracks:** Push and release the MODE SEL switch on the right hand grip to select a specific track. Pushing the **Up Arrow** and **Down Arrow** (6) keys will also advance tracks.

3. Push the EJECT button (3) (located under the CD door) to eject the CD from the player.

Intercom - If Equipped

NOTE:

Some local governments prohibit or restrict the use of headset (helmet-mounted) speakers. Check with local authorities and obey all applicable laws and regulations.

1. Plug headsets into front (Front Headset Socket Cap) and rear (Passenger Controls) headset jacks.

2. **Transmitting:** Press and hold either the rider PTT switch (Left Hand Audio Controls (typical)) or passenger PTT switch (Passenger Controls) to transmit. To end transmission, release **PTT** switch.

Citizen Band (CB) Radio - If Equipped

1. See Advanced Audio System Front Panel. Turn radio receiver ON and push the **COM** button (1). Push soft key **1** (9) to turn the CB ON/OFF.

2. **Select a Channel:** Push and release the MODE SEL switch on the right hand grip to select a CB channel.

3. **Transmitting:** Press and hold either the rider PTT switch (Left Hand Audio Controls (typical)) or passenger PTT switch (Passenger Controls) to transmit. To end transmission, release **PTT** switch.

Stereo Receiver

The Advanced Audio System stereo receiver is a radio (3 band maximum) with a full function Compact Disc (CD)/MP3 player and an auxiliary (**AUX**) input.

Auxiliary audio devices can play through the receiver's amplifier and speakers when connected to the **AUX** input port. Auxiliary devices include MP3 players, cassette players, and mini-disc players.

Receiver features include:

- Electronic single in-line CD/MP3 player with track up/down, forward and reverse scan, repeat and random play functions.
- CD/CDR/CDRW compatibility. Double-sided CDs will not play in this unit.
- MPEG 2.5 Level III (MP3) file format compatability.

- More than 10 hours of MP3 music - 150 MP3 songs (10 albums) on one 650MB disc.
- Anti-skip protection (>40 second memory and mechanical dampers).
- Remote controls for frequency tuning, band change, CD select, volume, and bass/treble/fader mixing.
- Automatic Volume Control (AVC) - automatically adjusts volume to compensate for ambient noise due to motorcycle speed.
- Time-of-day clock.
- Weather band frequencies displayed as NOAA channel numbers (active on North American units only).

Front Panel Controls

See Advanced Audio System Front Panel. The front panel consists of a set of pushbuttons, a liquid crystal display, (LCD), a protective door for the Compact Disc (CD/MP3) slot and a covered input port for auxiliary (AUX) players. Six of the pushbuttons are "soft keys" whose function will change with the display.

ON

Press **ON** to turn the receiver on and off.

1, 2, 3, 4, 5/Left Arrow

For the stereo receiver, the soft keys, **1, 2, 3, 4, and 5/Left Arrow**, are used to store and then recall a selected radio frequency (pre-sets). When combined with any of the Advanced Audio System accessories, the function of any active soft key for that accessory will be displayed next to the soft key in the LCD display.

6

Pressing the **6** soft key will return the display to the previous menu. For **CB** and **Intercom Setup**, the function of the **6** soft key will be displayed in the LCD next to the **6** soft key.

5/Left, Up, Down, Right Arrows

The **5/Left, Up, Down,** and **Right Arrow** soft keys are used for radio band frequency tuning, Bass and Treble mixing, Fader and Volume. They are also used to scroll and highlight a selection in a list. For an Advanced Audio System accessory module, the arrow keys are active when arrows appear in the display.

OK

With a menu or list item highlighted, press the **OK** pushbutton to confirm the selection and initiate the function.

COM

COM is the Citizen Band (CB) setup button. For models equipped with a CB radio, press the **COM** pushbutton to display the CB Setup menu. See CB Operation.

INT

INT is the intercom setup button. On models equipped with the intercom feature, press the **INT** pushbutton to display the Intercom Setup menu. See Intercom Operation.

NOTE:

With the headsets/microphones plugged into the rider and/or passenger intercom sockets, the intercom is voice activated (VOX).

NAV

NAV is not used on current models. If an Advanced Audio System GPS positioning module (no longer sold) is installed on the motorcycle, see the Advanced Audio GPS Navigation System Owner's Manual (76402-06) for operation.

LCD

The liquid crystal display (LCD) displays the operational status of the stereo receiver and that of any accessory.

CD Door

The CD door is a spring-loaded cover and will stay open when exchanging CDs.

Close the CD door after loading or unloading a CD. To close the door, push the door down until it latches.

EJECT

The CD **EJECT** button is found under the CD cover. Press the **EJECT** pushbutton to eject the CD.

AUX

The auxiliary input port under the **AUX** cover connects the receiver to an auxiliary device such as a cassette or MP3 player.

Use a 1/8 in. (3.5 millimeter) male to male extension cord to plug the line out or headset out from the auxiliary device into the **AUX** port. AUX appears in the LCD as a mode selectable with the **MODE SEL** switch.

The user has control of Bass, Treble, Fader and Volume, if so equipped, but all other player functions are performed with the auxiliary device. Set the volume level of the **AUX** device to normal or average.

NOTE:

*Close the protective cap whenever the **AUX** port is not in use.*

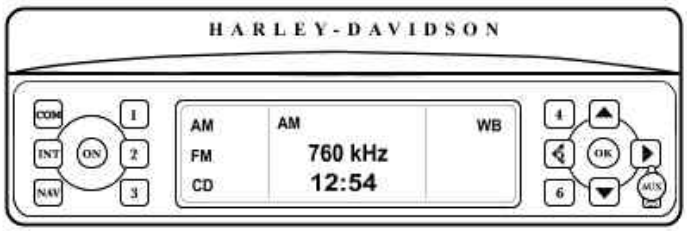

1. Communications (CB) setup (if equipped)
2. CD cover
3. EJECT (under cover)
4. OK (Confirm)
5. Auxiliary connector cover
6. Left (5), Up, Right, Down Arrow Keys
7. Soft keys (4, 5/Left Arrow, 6)
8. Liquid crystal display (LCD)
9. Soft keys (1, 2, 3)
10. ON key
11. GPS navigation module (if equipped)
12. Intercom setup (if equipped)

Advanced Audio System Front Panel

Left Handlebar Controls

PTT and +/SQ/- Switch (If Equipped)

See Left Hand Audio Controls (typical). On models equipped with a CB radio, a Push-To-Talk (**PTT**) and the squelch control switch (**+/SQ/-**) is located on the left handlebar switch assembly.

PTT: With the power ON and the LCD indicating CB is active, press and hold the **PTT** switch to transmit over the channel displayed. Release **PTT** to end transmission.

+/SQ/-: Lower the threshold to allow reception of CB signals by pressing the **+/SQ/-** switch toward the rear (**-**) or raise the threshold by pressing the **+/SQ/-** switch toward the front (**+**).

+/AUDIO/- Switch

AUDIO: See Left Hand Audio Controls (typical). Press the **AUDIO** switch to access the Audio/Setup menu on the LCD. Press and release **AUDIO** or the press the soft key to toggle to the next displayed function in sequence from Bass, to Treble, to Fade, to Display, to Volume and then to AVC.

If the **AUDIO** switch is left on any selection the function automatically reverts back to the selected mode after approximately 2-3 seconds.

±: Pressing the **AUDIO** switch upward (**+**) raises the level for the currently selected Audio/Setup (Bass, Treble, Fade, Volume or AVC). Pressing the switch downward (**-**) lowers the level. The level is raised or lowered as long as the switch is held until the minimum or maximum level is reached.

The LCD displays a horizontal dashed line to indicate the level. In the center of the line is a single thin dash. When the level is at the center, the selected audio is at a mid-point of its range.

The Fade function is only available on models with rear passenger speakers. See C in Display Examples. Fade adjusts the balance between rider and passenger speakers. Pressing **AUDIO** upward (**+**) moves the balance to the front speakers while pressing **AUDIO** downward (**-**) moves the balance to the rear speakers. Equal volume in front and rear speakers is indicated by one horizontal single line in the center position.

The Display function sets the illumination level of the characters in the LCD display.

The AVC (Automatic Volume Control) function sets the volume level to compensate for the ambient noise associated with motorcycle speed.

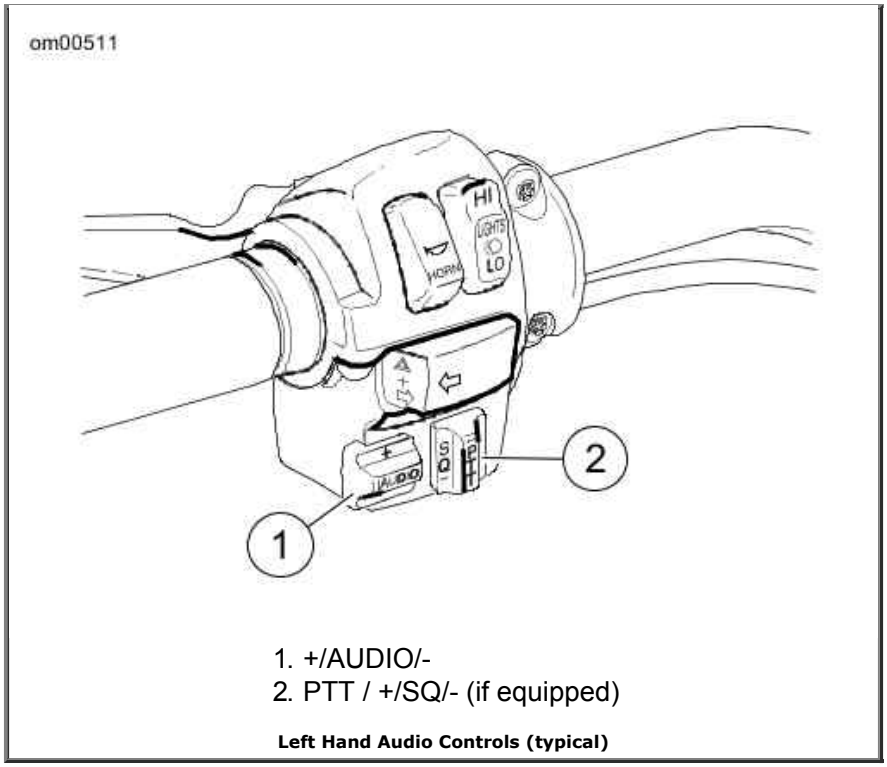

1. +/AUDIO/-
2. PTT / +/SQ/- (if equipped)

Left Hand Audio Controls (typical)

Right Handlebar Controls

See Right Hand Audio Controls (typical). The mode select (**MODE SEL**) switch is located on the right handlebar switch assembly.

UP/MODE SEL/DN Switch

MODE SEL

With the radio power ON, press and release the **MODE SEL** switch to sequence between the radio bands.

When a audio CD/MP3 disc is inserted into the CD player the **CD** function is added to the selections. When a 1/8 in. 3.5 mm connector is plugged into the **AUX** input port the AUX function is added to the selections.

The LCD display indicates the function selected.

UP/DN

In the receiver mode: **UP/DN** allows up or down radio station SEEK tuning.

In CD/MP3 mode: **UP/DN** changes tracks and performs fast advance and fast reverse.

In the CB mode: **UP/DN** changes the CB channel.

In the Intercom mode: **UP/DN** changes the voice activated microphone (VOX) sensitivity.

In the AUX mode: The **UP/DN** switch is inactive.

For a detailed description of the various modes, see Receiver Operation.

Receiver Frequency Bands

MARKET	BAND	FREQUENCY	STEPS

Domestic	AM	530-1700 kHz	10 kHz
	FM	87.75-107.9 MHz	200 kHz
	WB	162.400-162.550 MHz	25 kHz
International	LW	144-279 kHz	3 kHz
	MW	531-1611 MHz	9 kHz
	FM	87.5-108 MHz	100 kHz
Japanese	MW	522-1629 MHz	9 kHz
	FM	76.0-91.0 MHz	100 kHz

NOTE:

The intercom and CB can be activated at the same time with the receiver modes. The intercom and CB signals are passed to the audio circuits only if the signal strength exceeds the threshold established by CB squelch or VOX microphone sensitivity levels. Depending on the position of the speaker control switch in the fairing switch cap, the receiver function, the CB, and the VOX microphone can be heard in the headsets simultaneously. See Intercom Operation and CB Operation.

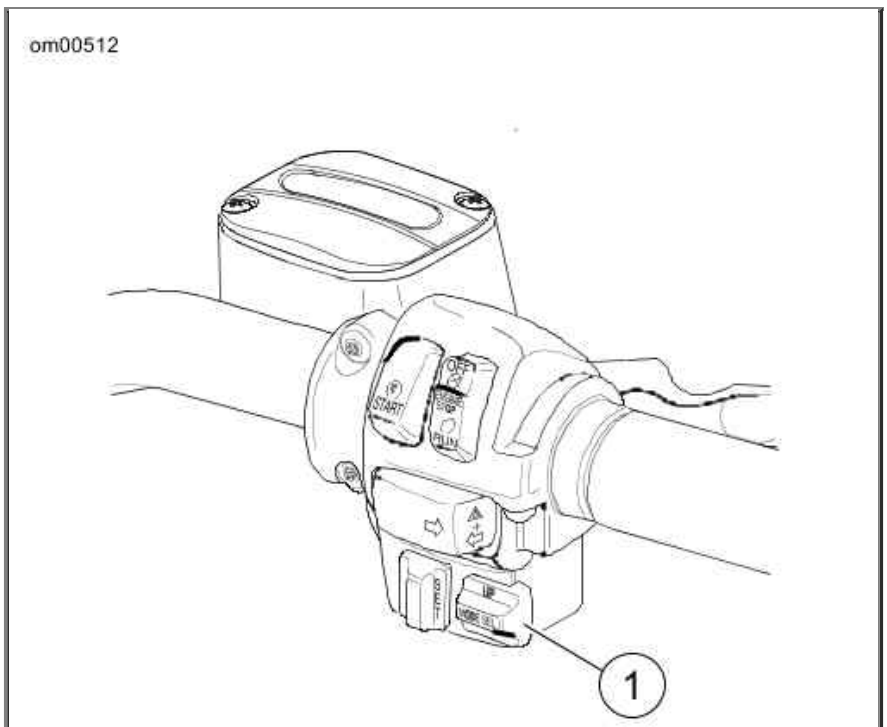

1. UP/MODE SEL/DN

Right Hand Audio Controls (typical)

Receiver Operation

See Advanced Audio System Front Panel for an illustration of the stereo receiver front panel.

Set Time-of-Day

Set the time-of-day with the ignition switch turned to **IGNITION** or **ACCESS** but with the stereo receiver OFF.

Press the Set soft key (**6**) (Set) on the front panel to display the time setup menu.

See A in LCD Display Examples. To increase the hours in the display press the Hrs+ soft key.

To decrease hours press the Hrs- soft key. When the hour is correct, release the soft key.

To increase the minutes in the display press the Min+ soft key. To decrease minutes press the Min- soft key. When the minute is correct, release the soft key.

Turn Receiver ON/OFF

To turn the receiver ON, turn the ignition switch to **IGNITION** or **ACCESS** and press the **ON** button on the front panel. To turn the receiver OFF, press the **ON** button.

If the receiver is ON when the ignition is turned OFF, the receiver will power up when the ignition switch is turned to **IGNITION**.

Select a Frequency Band

Using the right thumb, press the **MODE SEL** switch on the right hand grip and release to cycle to the desired frequency band (mode) or press the soft key next to the frequency band displayed in the LCD to select a frequency band.

See B in LCD Display Examples. The LCD highlights the selected band.

NOTE:

*Refer to Receiver Frequency Bands. When a CD/MP3 disc is present in the CD slot and/or an auxiliary player is plugged into the AUX port, the **MODE SEL** switch will cycle through the CD and AUX modes as well as the frequency bands.*

Volume

See D in LCD Display Examples. At any time the receiver is playing, the volume can be adjusted by pressing the **AUDIO** switch up (**+**) to increase volume or down (**-**) to decrease volume.

AM vs FM Reception

Commercial radio broadcasting is either AM (Amplitude Modulation) or FM (Frequency Modulation).

AM

AM radio waves reflect off the ionosphere which results in consistent signal reception at a long range (up to 100 miles or 160 kilometers).

However, AM radio can be displaced by loud humming, popping and crackling noises. This is electrical interference caused by noise from vehicle ignitions, electric signs, power lines and electrical storms.

FM

The advantages of FM radio are high fidelity sound, stereo reception, a wide range of broadcasting formats and a signal that is free of electrical interference.

The disadvantage of FM radio is its short range. FM radio waves travel in straight lines, called "line-of-sight," therefore, FM signals cannot be received over the horizon. At the limit of a station's range, the reception may fade in and out when objects pass between the transmitter and the motorcycle.

FM Stereo vs FM Mono

See E in LCD Display Examples. Normally, the Advanced Audio System plays FM signals in stereo. The LCD will indicate **STEREO**.

However, the stereo receiver has circuits which eliminate or minimize FM flutter due to weak stereo signals. The circuits detect a weak FM stereo signal and automatically blend it into a stronger FM mono signal. The transition is smooth and flutter-free because it occurs over a range of signal conditions, rather than at a minimum threshold.

When the system is automatically blending or is receiving an FM mono signal, the stereo indicator (**STEREO**) will disappear from LCD screen.

WB

See H in LCD Display Examples. Broadcast by the National Oceanic and Atmospheric Administration (NOAA) National Weather Band (WB) frequencies are available in North America only.

To receive NOAA weather alerts while listening to other radio bands, highlight the Alert indicator in the WB display by pressing the soft key. An alert tone will automatically switch the receiver to the announcing WB channel regardless of which frequency band is playing.

When equipped with the CB module, use the soft key to highlight the Alert indicator in the LCD display. Weather alerts are announced over other audio and the **Alert** indicator is highlighted in the display.

Tuning a Radio Station

The radio has several tuning modes in each of the frequency bands: Manual, Seek, Scan, Preset Memory and Preset Scan.

Tuning in all three modes continuously wraps around the ends of the band.

Manual Tuning

To manually tune the radio to a different frequency:

Press the **Up Arrow** button or the **Down Arrow** button to select the frequency in that direction. Hold the selected arrow button, and after a short delay of 1.5 seconds, the radio will continue to change frequencies until the selected arrow button is released.

SEEK Tuning

See E in LCD Display Examples. In SEEK, the radio tunes in to the next strong station.

Press and release the **MODE SEL** switch up (**UP**) to tune in the next strong station upward in the band. Press and release the switch down (**DN**) to tune in the next strong station downward in the band.

NOTE:

The SEEK icon appears in the display as long as the receiver is seeking the next strong frequency. The SEEK icon disappears as soon as the receiver has tuned in the next station.

SCAN Tuning

In SCAN, the radio continuously tunes from one strong station to the next until the SCAN is cancelled.

See F in LCD Display Examples. Press and hold the **MODE SEL** switch **UP** or **DN**

approximately 5 seconds to scan the band for strong station signals. Each strong station remains tuned in for 8 seconds before the radio scans to the next station. The receiver will continue to scan until cancelled.

To select a station, cancel SCAN while the radio is tuned to that station. Press the **MODE SEL** switch **UP** or **DN** to cancel a SCAN moving up the band.

Preset Memory Tuning

Use the soft keys, **1, 2, 3, 4,** and **5/Left Arrow** as preset buttons to store frequently tuned stations.

NOTES:

See C in LCD Display Examples. AM can store 6 preset frequencies.

*See E and F in LCD Display Examples. Separate FM1 and FM2 bands allow the rider to store 2 sets of 5 preset FM frequencies (10 total). Use the **More** soft key to toggle between FM1 and FM2. The full range of FM frequencies can be selected in either FM1 or FM2.*

To store a current station, press and hold any one of the preset buttons for 1.5 seconds. After an audible signal (a chirp), the station's frequency has been stored and the frequency will appear in the display next to the preset soft key.

To tune to a stored station, press and release the preset soft key.

Preset SCAN Tuning

See G in LCD Display Examples. In preset SCAN, the radio continuously tunes from one preset station to the next until the preset SCAN is cancelled. A P.SC icon will display while preset SCAN is active.

In the FM band, press and hold the More soft key for approximately 3 seconds. Each preset station remains tuned in for 10 seconds before the radio moves to the next station.

To select a station, cancel preset SCAN while the radio is tuned to that station. Press the **MODE SEL** switch **UP** or **DN** to cancel a preset SCAN.

Adjusting Volume

Volume can be adjusted in any radio band.

See D in LCD Display Examples. Volume is adjusted with the **AUDIO** switch on the left hand grip. Using left thumb, press the **AUDIO** switch up (**+**) to raise the volume or down (**-**) to lower the volume. The LCD displays the word Volume and a bar graph that changes length with the volume.

Press the **MODE SEL UP** or **DN** to cancel the Audio/Setup display or wait 5 seconds after the **AUDIO** switch is released, the display switches to the currently selected frequency band.

See K in LCD Display Examples. Volume can also be adjusted in Audio/Setup.

Press and release the **AUDIO** switch to enter the Audio/Setup display. Press and release the **AUDIO** switch to cycle through Bass, Treble, Fade and Display to Volume and the **AUDIO** switch to raise (**+**) or lower (**-**) the volume.

Mixing Bass and Treble

Bass and treble range adjustments can be applied to any Advanced Audio System source.

BASS: See I in LCD Display Examples. Press **AUDIO** to display Bass Audio/Setup. Using the left thumb, press the **AUDIO** switch up (**+**) to increase the bass range or down (**-**) to lower the

bass range. The LCD displays the word Bass and a dashed line that changes length with the setting. The short center dash indicates a middle setting.

TREBLE: See J in LCD Display Examples. From Bass Audio/Setup, press and release **AUDIO** to sequence to Treble. Using the left thumb, press the **AUDIO** switch up (**+**) to increase the treble range or down (**-**) to lower the treble range.

See J in LCD Display Examples. The LCD displays the word Treble and a bar graph that changes length with the setting. The short center dash indicates a middle setting.

Adjusting AVC

See L in LCD Display Examples. Automatic Volume Control (AVC) automatically adjusts volume level to compensate for ambient noise associated with motorcycle speed.

If the AVC does not adequately compensate for ambient noise (or if it over compensates), enter the audio setup menu and select AVC. Compensation is adjusted with the **AUDIO** switch on the left hand grip. Using left thumb, press the **AUDIO** switch up (**+**) to raise the compensation level or down (**-**) to lower the compensation.

NOTE:

Although the receiver AVC is preset at 3 bars, it is adjustable from zero bars (OFF) to four bars. At one bar, the volume does not change with motorcycle speed. The more bars displayed, the higher the volume increases with speed.

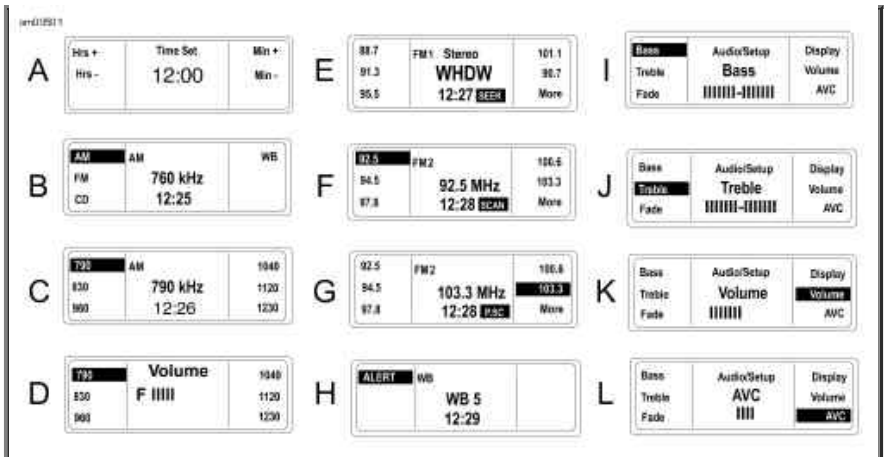

LCD Display Examples

Adjusting Display Contrast

See Character Display Illumination. Select Display from the Audio/Setup menu with the **AUDIO** switch. Press the **AUDIO** up (**+**) to increase or down (**-**) to decrease the contrast of the characters in the display.

NOTE:

The contrast can be decreased to render the characters invisible against the background. The characters will appear to have disappeared in the display. Before leaving the Display screen, always increase the character illumination to make the characters visible in other modes.

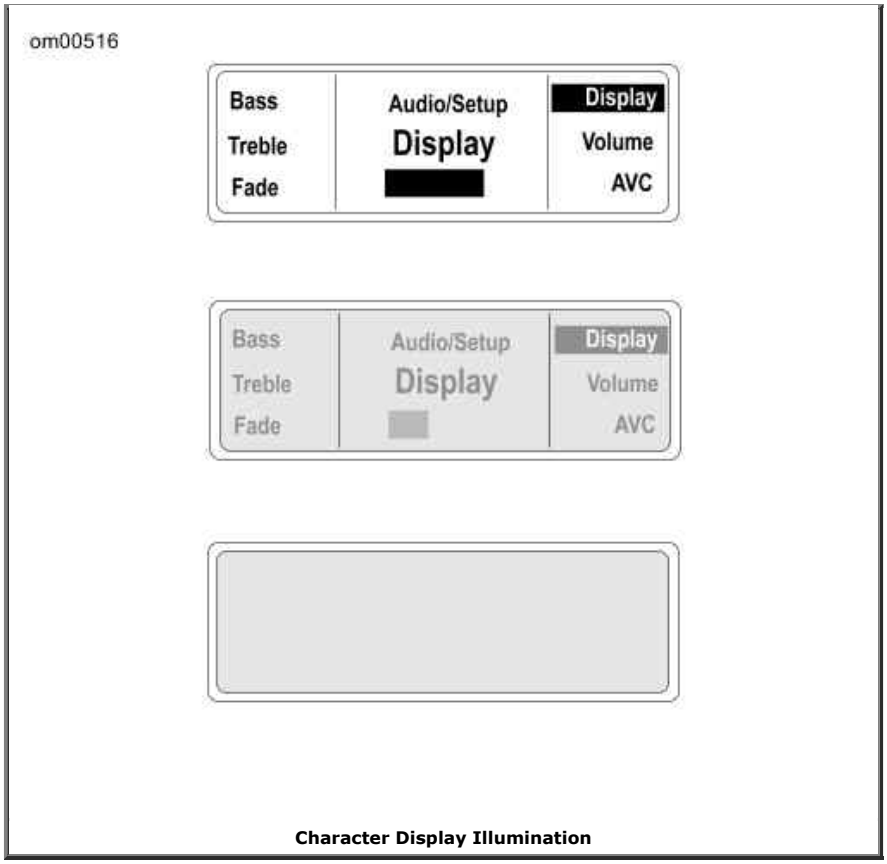

Character Display Illumination

CD/MP3 Operation

The CD player will accept commercial audio discs as well as compact discs recorded with MP3 (MPEG 2.5 Level III), files on compact disc read only (CDR) or compact disc read and write (CDRW) formats.

CAUTION

There are no serviceable parts inside the unit; leave all servicing to qualified service personnel. Disassembly of the unit could result in equipment damage and/or equipment malfunction. (00172a)

⚠WARNING

Do not change compact discs while riding, and do not select a volume level that blocks out traffic noise. Distractions or a volume level that blocks out traffic noise, could cause loss of control resulting in death or serious injury. (00086a)

⚠WARNING

Do not disassemble unit. Laser radiation is present if disc player is disassembled and the interlock fails or is defeated. Exposure to laser radiation could lead to death or serious injury. (00087a)

Auto Load

With the receiver power ON, raise the CD door and gently insert a CD, label side up, into the CD slot until the unit automatically pulls the CD into the player. Close the CD door.

NOTE:

Do not use double sided CDs in the Advanced Audio stereo receiver. Double-sided CDs may become permanently lodged in the player.

See C in CD/MP3 Display Examples. The receiver will automatically switch to CD operation. The CD track number and play time will appear in the LCD display. With a CD in the player, CD is added to the modes selectable with the **MODE SEL** switch.

⚠WARNING

Set volume levels and other controls on audio and electronic devices before riding. Distractions can lead to loss of control, resulting in death or serious injury. (00088b)

Disc Error 1

See B in CD/MP3 Display Examples. If the CD loaded into the CD player is damaged, of incorrect format, or upside down, the LCD will display the Disc Error 1 message.

Eject the CD. Refer to Recommendations for Handling CDs.

Eject

⚠WARNING

Do not change compact discs while riding, and do not select a volume level that blocks out traffic noise. Distractions or a volume level that blocks out traffic noise, could cause loss of control resulting in death or serious injury. (00086a)

Press the **EJECT** button found under the CD door to eject a CD. The CD will be partially ejected. Remove the CD. Close and latch the CD door.

The receiver will automatically return to the radio band and frequency playing when the CD was loaded and the CD mode is no longer selectable.

Tracks

To change CD/MP3 tracks, use the right thumb and press and release the **MODE SEL** switch on the right hand grip. Press **UP** and release to select higher numbered tracks or press **DN** and release to select lower number tracks.

Pressing the **Up Arrow** and **Down Arrow** keys will also advance tracks.

NOTES:

The player automatically numbers the MP3 files found on a CD in alphabetical order.

*If the **MODE SEL** switch is pressed and held **UP** or **DN** longer than 1.5 seconds, the track selections will fast advance or reverse as long as the switch is held.*

CD track selection wraps around the first and last track.

Fast Advance and Reverse

To fast advance a track, press the **MODE SEL** switch **UP** and hold longer than 1.5 seconds. The

current track will fast advance while the switch is pressed **UP**. The audio will advance to the subsequent track as long as the switch is held **UP**.

See D in CD/MP3 Display Examples. The play time display in the LCD will also fast advance.

To fast reverse a track, press **MODE SEL DN** and hold longer than 1.5 seconds. The current track will fast reverse while the switch is pressed **DN**.

The play time display in the LCD will also fast reverse.

Random

To play tracks randomly, press the Random soft key on the front panel while in the CD mode. The word Random will remain highlighted in the display. No selection is repeated until all other selections have been played.

NOTE:

*The Random soft key toggles between normal and Random play. Press once for random play. Press a second time to return to normal play. Pressing the **MODE SEL** switch **UP** or **DN** will select different tracks at random.*

See D in CD/MP3 Display Examples. Random will be highlighted in the display.

Scan

To scan the tracks on an CD/MP3 disk, press the Scan soft key.

NOTE:

The tracks will play for 8 seconds and then jump to the next track which will play for 8 seconds.

When a desired track is being played, press the Scan soft key again to cancel the scan operation.

Repeat

To repeat a CD track while it is playing, press the soft key next to the Repeat display.

To cancel Repeat, press the Repeat soft key again or press the **MODE SEL** switch **UP** or **DN** to change tracks.

Repeat will no longer be highlighted in the display.

MP3

The receiver CD player will automatically recognize and play MP3 files.

NOTE:

The files will be numbered sequentially.

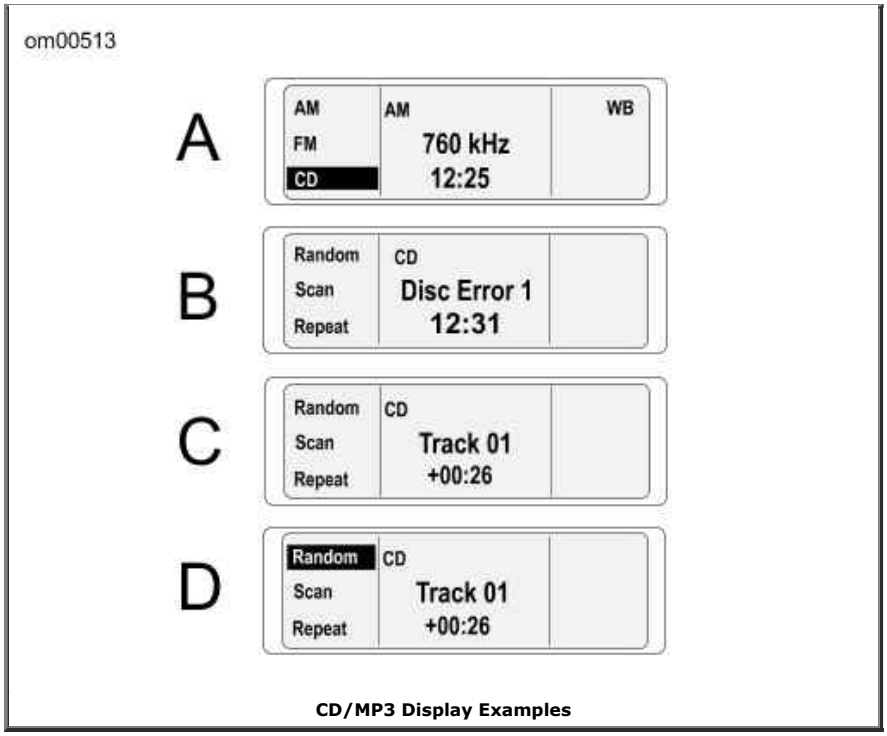

CD/MP3 Display Examples

Recommendations for Handling CDs

- Use caution when handling a CD. Avoid touching the bottom (shiny) side.
- Store audio CD/MP3 discs in acrylic jewel cases to protect against dust, scratches, light, and changes in humidity.
- Store CDs in a cool dry place away from direct sunlight.
- Use commercially available cleaning tissue to clean the CDs. Never use solvents that can damage the CD.
- Keep protective CD door closed at all times.

NOTES:

- *A laser that cannot focus properly may cause skipping. A clouded lens can be caused by dirty CDs, dust, smoke, high humidity, and airborne particles may cause the laser lens to cloud. Operating the CD without allowing the motorcycle to warm up can also cause a CD to skip.*
- *Do not attempt to clean the lens with a cleaning disc. Commercially available cleaning discs may cause damage or become stuck in the CD player.*

Intercom and Citizen Band with Passenger Speakers

Some models include a digitally tuned 40 channel Citizen Band (CB) transceiver and rider/passenger intercom.

Features include:

- Rider headset connector on fuel tank console.
- Passenger headset connector on backrest.
- Handlebar mounted rider push to talk (**PTT/+/SQ/-**) switch (CB and Intercom).
- Fairing-mounted speaker switch.
- Rear-mounted passenger **UP/MODE SEL/DN** and **PTT/+/VOL/-** switches (CB and Intercom).
- Digitally adjustable rear headset speaker volume.
- Passenger receiver band switching and frequency tuning.
- Passenger CD/MP3 player control.
- Rider hand-held microphone compatibility for areas that prohibit headset (helmet-mounted) speakers.

Headsets and Sockets

NOTE:

Some local governments prohibit or restrict the use of headset (helmet-mounted) speakers. Check with local authorities and obey all applicable laws and regulations.

A Harley-Davidson dealer can help you select the correct genuine Harley-Davidson headsets and microphones for your year and model Harley-Davidson. Harley-Davidson stereo helmet headsets with 7-pin DIN jacks fit the rider and the passenger intercom sockets. Other headset microphones will not work.

Open the socket cap and with the ridge on the headset jack facing upward and insert the jack into either the front or rear headset socket.

NOTE:

For areas that do not permit headset speakers, a special hand-held microphone can be used to transmit over the CB. This microphone is also available through a Harley-Davidson dealer.

CAUTION

Do not pull on the cord to remove the headset from the socket. Pull on the headset jack to disconnect the headset from the socket. (00174a)

The spring-loaded hinge keeps the headset socket cap closed while riding. It protects against dirt and water when the headset or hand-held microphone is not in use. Before washing the motorcycle, verify that **BOTH** rider and passenger socket caps are closed.

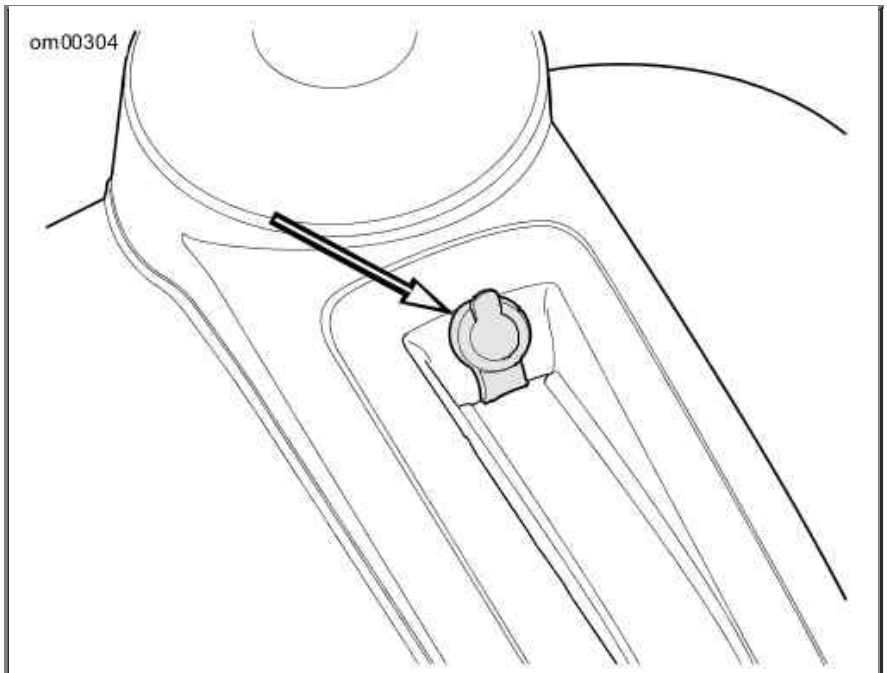

Front Headset Socket Cap

VOX Microphones

The Harley-Davidson intercom uses a voice-activated (VOX) microphone for hands-free intercom operation. The headset microphone minimizes the transmission of hand-held microphone generated noise.

The intercom is activated when a voice or sound exceeds a preset audio level, the voice is said to "break VOX". The voice or sound is transmitted to the headsets.

NOTE:

*Pressing and holding the **PTT** switch will also open the microphone.*

Once VOX is broken, a conversation can proceed uninterrupted. After the absence of sound or voice, there is a delay of approximately 2 seconds before the microphone is deactivated. This

delay in deactivation allows for pauses in conversation.

Because loud exhausts, passing trucks, car horns or other background sounds may unintentionally activate the intercom, the sound level necessary to break VOX is adjustable. See Intercom Operation.

Speaker Controls

SPKR Switch

A three position speaker (SPKR) switch is located on the inner fairing cap on models with passenger speakers. See SPKR Switch .

Off/Forward: In the forward position, the speakers are off. Audio (radio, CD/MP3, AUX and CB) is played in the headsets only. During simultaneous CB reception, the other audio source is muted and only the CB is heard in the headsets.

Center: In the center position, the radio, CD/MP3 player or AUX is played over the speakers while the CB is played only in the headsets.

On/Rearward: In the rearward position, the speakers are on. With the SPKR indicator lit, the radio, the CD/MP3 player, or any AUX device and the CB are played through both the rider and passenger speakers. When a CB signal is received, other audio sources mute and the CB is played over the speakers. Refer to Audio Routing and Mixing Combinations.

NOTE:

The intercom is only heard in the headsets, regardless of the SPKR switch position.

Rider to Passenger Speaker Balance

The receiver FADER control balances the front rider and rear passenger speakers.

NOTE:

FADER is available only on vehicles equipped with rear passenger speakers.

FADER: With the fairing speaker switch in either the SPKR or center position, press the **AUDIO** switch to cycle through Bass to Treble to Fade in the LCD. Or with the motorcycle stationary, press the left hand **AUDIO** switch once to enter the Bass display and select Fade with the **MODE SEL** switch or with the soft key.

The LCD displays the word Fader and a row of outlined rectangles. The smaller center rectangle indicates equal balance between front and rear speakers. A single solid rectangle moves left or right of the center dash as the balance of volume is switched from the passenger speakers (to the left) to the rider speakers (to the right). See C in Display Examples.

- Press the AUDIO switch up (+) to raise the volume from the rider speakers while lowering the volume from the passenger speakers.
- Press the AUDIO switch down (-) to raise the volume from the passenger speakers while lowering the volume from the rider speakers.

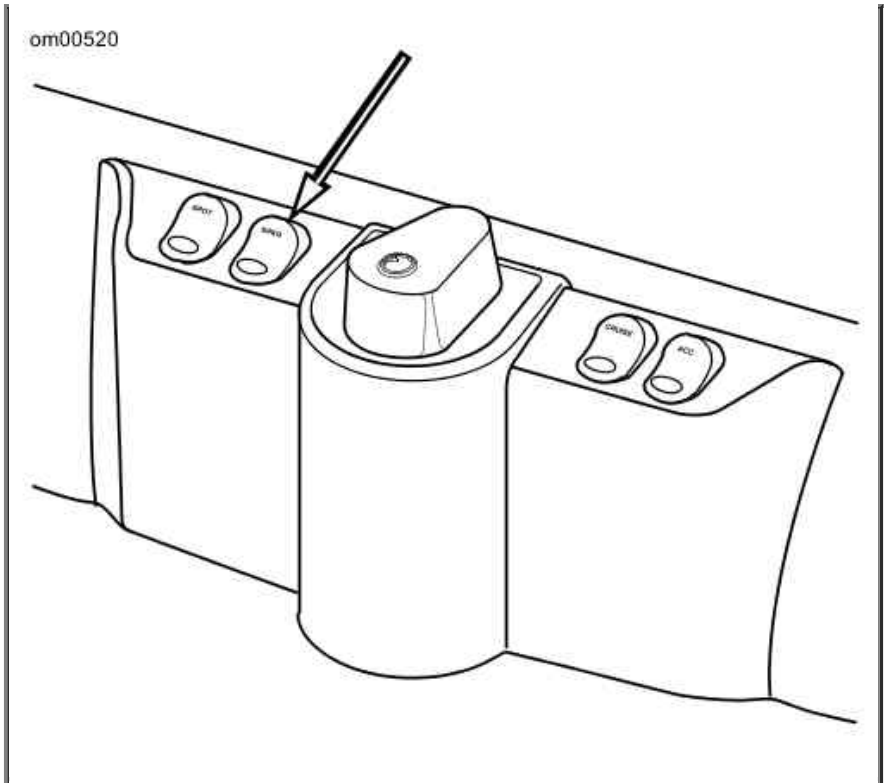

SPKR Switch

Passenger Controls

UP/MODE SEL/DN Switch

See Passenger Controls. The passenger **MODE SEL** switch on the left side of the speaker box gives the passenger control of radio band selection, tuning, CD/MP3 operation and all functions of the hand grip mounted **MODE SEL** switch.

NOTE:

For information on routing audio signals to the passenger speakers and headsets, refer to Audio Routing and Mixing Combinations.

PTT and +/VOL/- Switch

See Passenger Controls. The **PTT/+/VOL/-** switch on the right side of speaker box allows the passenger to talk over the intercom or transmit over the CB as well as to raise or lower the rear headset volume.

See E in Display Examples. When the rear headset volume is adjusted, a F (front) and R (rear) bar graph appear in the LCD display.

NOTES:

- *The passenger VOL switch affects only the passenger headset. The handlebar mounted **AUDIO** switch is the master volume control, and used in conjunction with the FADER, affects both the rider and passenger speaker volume.*
- *With stereo receiver tuning, radio band selection, CD/MP3 track selection or other functions, simultaneous use of front and rear **MODE SEL** switches may cause operation to be suspended until either rider or passenger controls are released.*

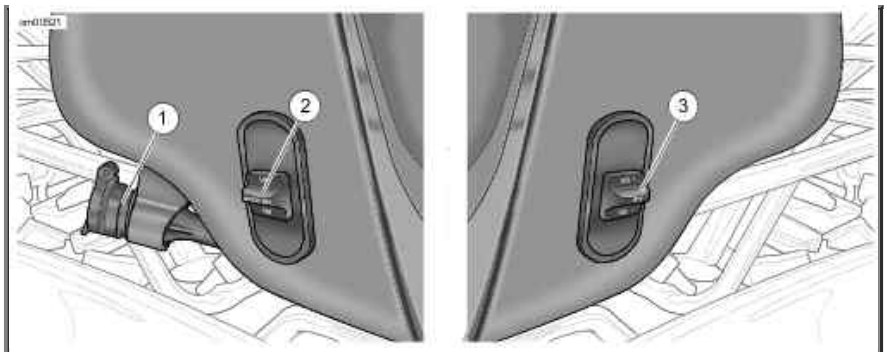

1. Passenger headset socket (left side)
2. UP/MODE SEL/DN (left side)
3. PTT/+/VOL/- (right side)

Passenger Controls

Sidecar Controls

See TLE Ultra Sidecar Audio Controls. A **MODE/+/TUNE/-** press and tilt switch, a **PTT/+/VOL/-** press and tilt switch and a headset socket are mounted on the dash of the TLE Ultra sidecar for the FLHTCU/FLHTK/FLTRU. These controls and stereo speakers of the sidecar are connected to the Advanced Audio System through a wire harness.

MODE and +/TUNE/- Switch

The **MODE/+/TUNE/-** switch controls radio band selection, station tuning, and CD/MP3 track selection and operation. The **MODE/+/TUNE/-** switch operates like the hand grip mounted **UP/MODE SEL/DN** switch.

PTT/+/VOL/-

The **PTT/+/VOL/-** press and tilt switch controls the volume in the sidecar speakers and headset and is used to open the intercom and transmit over the CB.

Pressing the **PTT** switch left (**+**) raises the volume level for the currently selected Audio. Pressing the switch right (**-**) lowers the volume level.

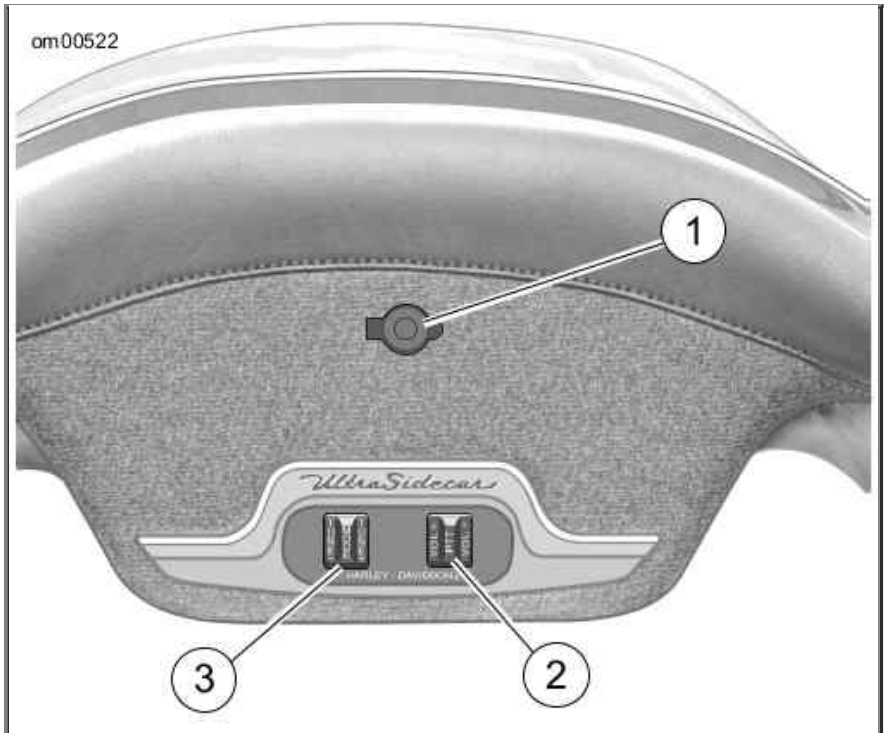

1. Headset socket
2. PTT/+/VOL/-
3. MODE/+/TUNE/-

TLE Ultra Sidecar Audio Controls

Speaker Output Power

MODEL	TOTAL WATTS	SPEAKERS	OHMS PER SPEAKER
FLHX FLTRX FLHTC	40	2 speakers, 20 watts each	2
FLHTCU FLTRU FLHTK	80	4 speakers, 20 watts each	2
TLE Sidecar w/amplifier	40	2 speakers, 20 watts each	2

Intercom Operation

Operation

To speak over the intercom, press and hold either rider or passenger **PTT** switch to enable the microphones. Both microphones are active while one or both **PTT** switches are pressed.

NOTE:

Always verify that the CB is off so that private intercom conversations will not be transmitted.

Activating the Intercom and the VOX Microphones

Press and hold the **INT** button on the front panel, to open the Intercom Setup display.

See D in Display Examples. To activate the intercom (INT) and the VOX microphones, press soft key **1** to turn the intercom ON.

The intercom will activate in Intercom Setup with VOX sensitivity and headset volume level settings from the previous use. VOX sensitivity and headset volume are adjusted in Int Setup only.

To exit Int Setup, press and release the **MODE SEL** switch or the **INT** button.

To make adjustments to VOX sensitivity after exiting Intercom Setup, re-enter Intercom Setup by pressing **INT**.

NOTE:

For privacy, the intercom can only be heard through the headsets.

To turn OFF the intercom and the VOX microphones, press the **INT** button to open the Intercom Setup display and press the On/Off soft key (**1**).

Adjusting VOX Sensitivity

VOX sensitivity should be adjusted so that the microphones break VOX at a normal voice level.

Enter Intercom Setup by pressing the **INT** button. Press the ON or **1** soft key to turn the intercom on.

See G in Display Examples. Press the **MODE SEL** switch **UP** or **DN** or press the **4** or **5** soft key to initiate the VOX display. The LCD displays VOX sensitivity as a bar graph with a smaller bar to indicate the center of the 14 bars. A higher number of bars indicates greater sensitivity while a lower number means less sensitivity.

Continue to use **MODE SEL** on the right hand grip to adjust the sensitivity level. Press **MODE SEL UP** to make the microphone more sensitive. Press the **MODE SEL DN** to reduce sensitivity. To exit Setup, press and release the **MODE SEL** switch.

NOTES:

- *The receiver retains the sensitivity level from the previous setup. However, if power is removed from the receiver, VOX sensitivity defaults to mid level.*
- *VOX sensitivity may have to be adjusted if either microphone is unintentionally activated because the microphone misinterprets radio, road or background sound as conversation.*

When VOX is set to its maximum, the microphone is always open. The VOX display will read Open.

When VOX is set to lowest value, the microphone is closed and the VOX display reads Closed.

Adjusting Rider Headset Volume

The rider intercom volume is only adjustable in Intercom Setup.

See E in Display Examples. Enter Intercom Setup, speak into microphone and adjust the intercom volume with the AUDIO switch on the left hand grip. Press **AUDIO +** to raise the volume and **AUDIO -** to lower the volume. The LCD displays a dashed line that changes length with the level.

See F in Display Examples. When the headset volume has been adjusted to the bottom of its range, Mute will appear in the volume display.

To exit Intercom Setup, press and release the **MODE SEL** switch.

⚠WARNING

Set volume levels and other controls on audio and electronic devices before riding. Distractions can lead to loss of control, resulting in death or serious injury. (00088b)

Adjusting Passenger Headset Volume

The passenger intercom volume is only adjustable in Intercom Setup.

Enter Intercom Setup. Speak into the microphone and adjust the intercom volume with the **AUDIO** switch on the right speaker box on the passenger's backrest. Press **AUDIO +** to raise the volume and **-** to lower the volume. The LCD displays a bar graph that changes length with the level.

See F in Display Examples. When the headset volume has been adjusted to the bottom of its range, Mute will appear in the volume display.

To exit Intercom Setup, press and release the **MODE SEL** switch or press the INT pushbutton.

CB Operation

Activating the CB

See H and I in Display Examples. To activate the Citizen Band transceiver, press and release the **COM** pushbutton on the front panel. Press soft key **1** to turn the CB ON/OFF. The CB will activate in CB Setup with squelch threshold and channel settings from the previous use. CB channels are selected in CB Setup.

To exit CB Setup but leave the receiver with the CB active, press and release the **MODE SEL** switch or the **COM** pushbutton.

To turn off the CB, press the **COM** button to enter CB Setup. Press soft key **1** to turn the CB ON and Off.

CAUTION

There are no adjustments internal to the CB transceiver chassis that can be performed without risking non-compliance with Federal Communications Commission (FCC) rules. Refer to the original equipment manufacturer for any service required during the warranty period. For transmitter service after the warranty period, refer to a certified repair service. Any frequency determining components, such as crystals, or power determining semi-conductors, etc., should only be replaced with the original component manufacturer's part or equivalent. Substitutes can result in violation of FCC rules. (00175a)

Entering CB Setup

See J in Display Examples. With the CB on, press **COM** to enter CB Setup. The LCD displays CB SETUP in the upper half and the CB channel appears in the lower half.

To exit CB Setup, press and release the **MODE SEL** switch.

After exiting CB Setup with the CB still active, re-enter CB Setup by pressing and releasing the **COM** soft key.

Selecting a Channel

In CB Setup, use the **MODE SEL** switch to select a CB channel. Press and release **MODE SEL UP** or **DN** to switch channels one at a time.

Soft keys 4, 5 and 6 can be used to preset CB channels.

If the **MODE SEL** switch is held up or down, tuning continuously wraps around the ends of the channels.

See K in Display Examples. When squelch is interrupted, the CB in the display inverts. If the squelch is not interrupted and the another source is playing, CB is displayed.

⚠WARNING

Set CB channel, squelch threshold and volume before riding to minimize adjustments on the road. Distractions can lead to loss of control, resulting in death or serious injury. (00089a)

Preset Channels

See J in Display Examples. Up to 3 CB channels can be preset. Press and hold a soft key (4, 5, 6) to preset a CB channel.

Once set, press the preset soft key to switch to the preset channel when the CB display is active.

Adjusting Squelch

See K in Display Examples. The CB signal is passed to the speakers or headsets only if signal strength exceeds the threshold set with the squelch control switch (**PTT/+/SQ/-**). When CB signals exceed the threshold, they are said to "break squelch." Refer to Squelch Control Switch.

- To lower the threshold to process the weakest CB signals, press **SQ -** or rearward.
- To raise the threshold to process stronger signals, press **SQ +** or forward.

In the LCD, a dashed line changes length with the setting.

Squelch Control Switch

SQ (-) REARWARD	SQ (+) FORWARD
More signals	Fewer signals
More noise	Less noise
More static	Less static
Unwanted signals	Better sound quality

Transmitting

To transmit, press and hold the **PTT** switch. Transmission is over the CB channel displayed in the LCD. To end transmission, release **PTT**.

Adjusting Volume

Refer to Audio Routing and Mixing Combinations. See L in Display Examples. To adjust volume of the CB in the speakers or headset, Press **AUDIO +** to raise the volume or **AUDIO -** to lower the volume. CB volume is adjustable when squelch is interrupted or when the display is in

CB Setup.

A dashed line that changes length with the volume setting is displayed.

CAUTION

Operating the CB radio without an antenna or with a broken antenna cable can result in damage to the transmitter circuitry. (00176a)

CB Range

Maximum transmission range can only be expected under stable weather conditions in flat, open country.

Weather: In times of atmospheric disturbances, such as rain, snow, or even sunspots, the CB's range can be reduced.

Terrain: Buildings, hills, valleys or any elevated objects or depressions that either block or create a longer path between transmitter and receiver will reduce or disrupt communications.

Obstructions: Transmissions may be cut off under a viaduct or inside a tunnel or parking garage.

NOTE:

The CB transmitter is the most powerful allowed under Federal law, but since there is no large steel area to create a ground plane, it may not transmit as strongly as when mounted in a car or truck.

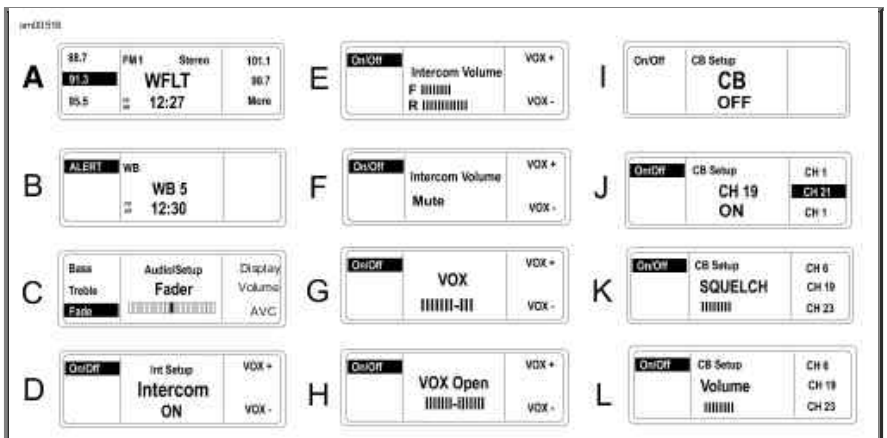

Display Examples

Audio Routing and Mixing

General

Refer to Audio Routing and Mixing Combinations. Whether audio is routed to the headsets, speakers or both depends on the **SPKR** control switch and the **INT** and **CB** buttons on the receiver.

A single audio source routed to headset or speaker can be controlled with the riders **AUDIO** switch or the passenger **VOL** switch.

NOTE:

*The passenger volume control switch affects only the passenger headset. The handlebar mounted **AUDIO** switch is the master volume control, and used in conjunction with the fader, affects both the rider and passenger speaker volume.*

Audio Routing and Mixing Combinations

AUDIO ROUTING COMBINATIONS			VOLUME CONTROL
SPEAKER CONTROL SWITCH	**AUDIO SOURCE(S)**	**AUDIO OUT**	**AUDIO ± OR VOL ±**
Off or Forward (Headsets)	Music*	Headsets	Music*
	CB	Headsets	CB (During reception or SETUP)
	Intercom	Headsets	Intercom (Only in SETUP)
	Intercom and music*	Both in the headsets	Music
	CB and music*	CB in the headsets (Music is muted during CB reception)	CB (During reception or SETUP)
	Intercom and CB	Both in the headsets (Music is muted during CB reception)	CB (During reception or Setup)
Center (Speakers and headsets)	Music*	Speakers	Music*
	CB	Headsets	CB (During reception or SETUP)
	Intercom	Headsets	Intercom (Only in SETUP)
	Intercom and music*	Intercom in the headsets Music* in the speakers	Music*
	CB and music*	CB in the headsets Music* in the speakers Music is muted during CB reception	CB
	Intercom and CB	Both in the headsets (Music is MUTED during CB reception)	CB*
On or rearward (Speakers)	Music*	Speakers	Music*
	CB	Speakers	CB (During reception or SETUP)
	Intercom	Headsets	Intercom (Only in SETUP)
	Intercom and music*	Intercom in the headsets. Music in the speakers.	Music
	CB and music*	CB in the speakers (When squelch is broken)	CB
	Intercom and CB	Intercom in the headsets (CB in the speakers MUTED during CB reception)	CB
* Music = Radio, CD player or auxiliary (AUX) audio source.			

System Troubleshooting

If having trouble with the Advanced Audio System, check radio settings, control switches, and fuses. See the Electrical Diagnostic Manual for all system diagnosis and electrical troubleshooting information, or see a Harley-Davidson dealer for service.

Refer to Operational Troubleshooting: Advanced Audio System. Use the following table to identify rider or passenger control settings that prevent intended operation.

CAUTION

There are no serviceable parts inside the unit; leave all servicing to qualified service personnel. Disassembly of the unit could result in equipment damage and/or equipment malfunction. (00172a)

Radio Fuses

The radio is protected by fuses in the fuse block. Refer to Fuses and Relays to inspect and replace the radio power fuse, radio memory fuse, or audio amplifier fuse (if equipped), or see your Harley-Davidson Dealer for service.

Operational Troubleshooting: Advanced Audio System

THIS	CAN PREVENT THIS
Squelch broken	Fairing music
	Headset music
	Passenger speaker music
Squelch unbroken	CB audio
CB off or low volume	CB audio
Front or rear PTT on	Fairing music
	Headset music
	Passenger speaker music
	CB audio
Handlebar volume low	Fairing music
	Headset music
	Passenger speaker music
Passenger headset volume low	Passenger headset music and CB audio
Fairing SPKR back to speaker	Headset music and headset CB audio
Fairing SPKR forward to headset	Fairing music and CB audio
INT off	Voice communications (Unless PTT is pressed)

Hands-Free Security Module

Harley-Davidson Smart Security System

Components

The Harley-Davidson Smart Security System (H-DSSS) consists of a Hands-Free Security Module (HFSM) and a hands-free antenna mounted on the motorcycle, and a hands-free fob carried by the rider/passenger.

After parking the motorcycle, turn the ignition key to OFF or ACC and the Smart Security System will automatically **arm** within five seconds. While armed, the starter and ignition are disabled and the rider may leave the motorcycle knowing that the module will activate an alarm if someone tampers with the ignition or attempts to move the motorcycle.

If the fob is present, the module will automatically **disarm** when the ignition key is turned to IGNITION or ACC.

NOTES:

- *If disconnecting power from the motorcycle battery, see Disconnecting Power to prevent the optional security system siren from sounding.*
- *Do not relocate the module or the antenna on the motorcycle.*

Options

Several options are available for the Harley-Davidson Smart Security System from the Harley-Davidson Genuine Motor Accessories and Motor Parts catalog. Options include:

- Smart Siren II.
- Security Pager Receiver II.
- Replacement Fobs.

See a Harley-Davidson dealer for details.

FCC Regulations

FCC ID: L2C0027TR IC ID: 3432A-0027TR

FCC ID: L2C0028TR IC ID: 3432A-0028TR

This device complies with Part 15 of the FCC Rules and with RSS-210 of Industry Canada rules. Operation is subject to the following two conditions:

(1) This device may not cause harmful interference, and (2) This device must accept any interference received, including interference that may cause undesired operation.

NOTE:

Changes or modifications not expressively approved by the party responsible for compliance could void the user's authority to operate the equipment.

The term "IC:" before the radio certification number only signifies that Industry Canada technical specifications were met.

Security System Fob

Fob Assignment

See Fob: Smart Security System. Key fobs are electronically assigned to the Harley-Davidson Smart Security System by a Harley-Davidson dealer so that the motorcycle can recognize a fob's unique signal. Only two fobs can be assigned at any one time.

Replacement fobs can be purchased from a dealership but can only be assigned to the motorcycle by a trained Harley-Davidson technician.

NOTES:

- *The reusable label found on the fob packaging lists the serial number of the fob. For reference, affix the label to a blank "NOTES" page in this Owner's Manual.*

- *The serial number of the fob is also found on the inside of the fob. See Fob Battery.*
- *The module will arm only if the fob has been assigned by a Harley-Davidson dealer and a Personal Identification Number (PIN) has been entered in the system. The PIN should be recorded on the Personal Information page in the front of this Owner's Manual and on the removable wallet card.*
- *Should the rider misplace the fob or if the fob fails, the rider can refer to the wallet card and use the PIN to manually disarm the system. Refer to Arming and Disarming and Troubleshooting.*
- *The PIN can easily be changed by the rider at any time. Refer to Personal Identification Number (PIN).*

Riding with a Fob

- Always carry the fob when riding, loading, fueling, moving, parking or servicing the motorcycle. Carry the fob in a convenient pocket.
- Do not leave the fob attached to the handlebars or store the fob in a luggage compartment. Unintentionally leaving the fob with the motorcycle when it is parked prevents the system from activating the alarm.
- Do not ride with the fob stored in a metal case or with the fob closer than 3.0 in 76 mm to a cell phone, PDA, display or other electronic device. Any electromagnetic interference may prevent the fob from disarming the system.
- For added security, always lock the fork and remove the key when parked. If the fob is within range and the motorcycle is unlocked, tampering with the motorcycle will not activate the alarm.

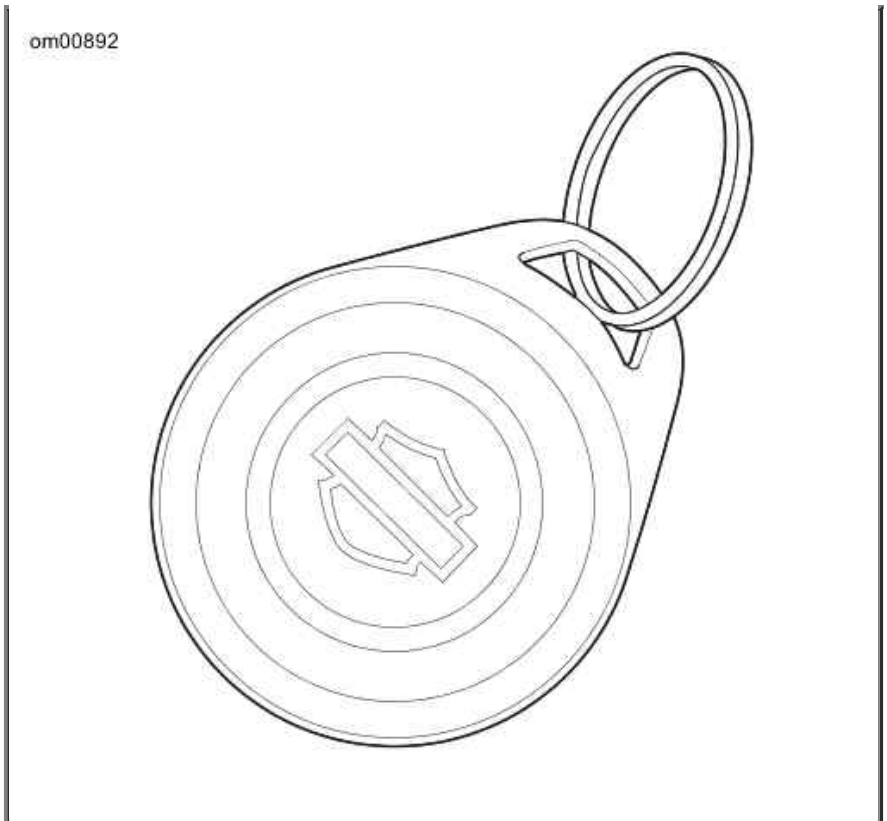

Fob: Smart Security System

Personal Identification Number (PIN)

The Personal Identification Number (PIN) is a number that can be used to disarm the Harley-Davidson Smart Security System in case an assigned fob is misplaced, fails or if the fob cannot communicate with the motorcycle because of electromagnetic interference.

A PIN is a five-digit number (1-9, no zeros).

Changing the PIN

To maintain security, the rider can change the PIN at any time. Refer to Changing the PIN.

Changing the PIN

STEP NO.	ACTION	WAIT FOR CONFIRMATION	NOTES
1	Select a 5-digit (1 thru 9) PIN and record on the wallet card from Owner's Manual.		
2	With an assigned fob present, turn the ignition switch **IGNITION**-OFF-**IGNITION**-OFF-**IGNITION.**		
3	Press **left** turn signal switch **3 times**.		
4	Press **right** turn signal switch **1 time** and release.	Turn signals will flash 3 times. Current PIN will appear in odometer. The first digit will be flashing.	See Odometer Windows - PIN.
5	Enter first digit (a) of new PIN by pressing **left** turn signal switch **a** times.		
6	Press **right** turn signal switch **1 time** and release.	The new digit (a) will replace the current in odometer window.	
7	Enter second digit (b) of new PIN by pressing **left** turn signal switch **b** times.		
8	Press **right** turn signal switch **1 time** and release.	The new digit (b) will replace the current in odometer window.	
9	Enter third digit (c) of new PIN by pressing **left** turn signal switch **c** times.		
10	Press **right** turn switch **1 time** and release.	The new digit (c) will replace the current in odometer window.	
11	Enter fourth digit (d) of new PIN by pressing **left** turn signal switch **d** times.		
12	Press **right** turn switch **1 time** and release.	The new digit (d) will replace the current in odometer window.	
13	Enter fifth digit (e) of new PIN by pressing **left** turn signal switch **e** times.		
14	Press **right** turn switch **1 time** and release.	The new digit (e) will replace the current in odometer window.	
15	Before the module rearms, turn the ignition switch to **OFF**.	The odometer will return to mileage.	Turning the ignition switch to **OFF** stores the new PIN in the module.

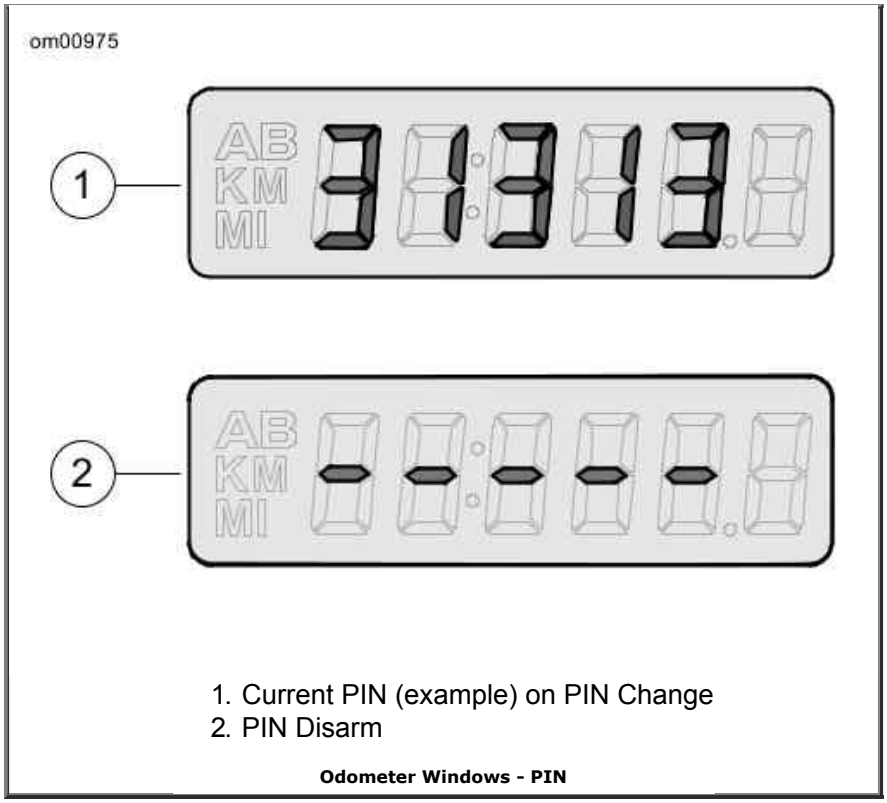

1. Current PIN (example) on PIN Change
2. PIN Disarm

Odometer Windows - PIN

Security Status Indicator

See Instrument Lamps. The security system lamp in the speedometer face indicates the status of the Harley-Davidson Smart Security System.

- **Armed:** A lamp that blinks approximately every 3 seconds indicates that the system is armed.
- **Disarmed:** After the system disarms and the ignition is on, the lamp will remain illuminated for approximately four seconds and then turn off.
- **Service:** A lamp that remains illuminated longer than four seconds while the system is disarmed indicates that the module needs servicing.

Arming and Disarming

Arming

When the motorcycle is parked and the ignition key is turned to OFF, the security system arms automatically within five seconds if no motion is detected. Even when the fob is present, the system will arm.

On arming, the turn signals will flash twice and the optional siren will chirp twice. While armed, the key icon in the speedometer face will flash every three seconds.

NOTE:

International Models: *The HFSM must be in the Chirp Mode for the siren to chirp on arming or on disarming. See Siren Chirp Mode (Confirmation).*

Disarming

Once disarmed, the rider may ride or move the motorcycle for parking, storage or service without setting off the alarm.

Fob: An armed security system is automatically disarmed when the ignition key is turned to IGNITION with the fob present.

When the module disarms, the optional siren will chirp once and the key icon will illuminate for a solid four seconds and then turn off.

NOTE:

Any motion, like lifting the motorcycle up off of its jiffy stand, or turning the ignition key to IGNITION and the module will electronically search for the presence of the fob. If the fob is present, the system disarms.

Personal Identification Number (PIN): If the fob is misplaced or if the present fob fails to communicate with the module, the system can be disarmed with the Personal Identification Number (PIN).

Disarming with a PIN

Do not turn handlebars, straddle seat or lift motorcycle off the jiffy stand. During a PIN disarm, if the security system detects motorcycle motion the system will activate the alarm.

NOTES:

- *At any time during a PIN disarm, if the fob is brought within range of the motorcycle, the security system will disarm when the module receives the coded signal from the fob.*
- *If a mistake is made while entering PIN, wait two minutes before another disarming attempt.*
- *The security system will remain disarmed until the ignition key is turned to OFF.*

Entering a PIN to Disarm Harley-Davidson Smart Security System

STEP NO.	ACTION	WAIT FOR CONFIRMATION	NOTES
1	If necessary, verify the current 5-digit PIN.		Should be recorded on wallet card.
2	Turn ignition switch to **IGNITION**.		
3	Quickly (within 2 seconds of turning ignition switch) hold **both** turn signal switches in until confirmation.	Key icon flashes at fast rate. In the odometer window, a flashing dash will be followed by four more dashes.	See Odometer Windows - PIN. Five dashes will appear in the odometer window.
4	Enter first digit (**a**) in the PIN by pressing **left** turn switch **a times.**	The first digit (**a**) in the odometer will be the first digit in the PIN.	
5	Press **right** turn switch **1 time.**	The first digit is stored and the dash will flash.	Serves as enter key.
6	Enter second digit (**b**) in the PIN by pressing **left** turn switch **b times.**	The second digit (**b**) in the odometer will be the second digit in the PIN.	
7	Press **right** turn switch **1 time.**	The second digit is stored and the next dash will flash.	Serves as enter key.
8	Enter third digit (**c**) in the PIN by pressing **left** turn switch **c times.**	The third digit (**c**) in the odometer will be the third digit in the PIN.	
9	Press **right** turn switch **1 time**.	The third digit is stored and the next dash will flash.	Serves as enter key.
10	Enter fourth digit (**d**) in the PIN by pressing **left** turn switch **d times**.	The fourth digit (**d**) in the odometer will be the fourth digit in the PIN.	
11	Press **right** turn switch **1 time.**	The fourth digit is stored and the next dash will flash.	Serves as enter key.
12	Enter fifth digit (**e**) in the PIN by pressing **left** turn switch **e times.**	The fifth digit (**e**) in the odometer will be the fifth digit in the PIN.	

13	Press **right** turn switch **1 time**.	The fifth digit is stored. The key icon stops blinking.	Smart Security System is disarmed.

Alarm

Warnings

Once armed, if the motorcycle is moved or lifted up off of its jiffy stand or if the ignition switch is turned to IGNITION and the fob is not present, the alarm will warn the operator with three alternate flashes of the turn signals and a chirp of the optional siren.

Within four seconds, if the motorcycle is back on its jiffy stand and no further motion is detected and/or the ignition switch is turned to OFF, the module will remain armed without activating the alarm.

If the motorcycle motion continues or the ignition switch is not turned back to OFF, the module will issue a second warning four seconds after the first.

NOTE:

During warnings and alarms, the starter motor and the ignition circuits are disabled.

The Alarm

If the Smart Security System is still detecting motion and/or if the ignition switch has not been turned back to OFF after a second warning, the system will activate the alarm.

When activated, the Smart Security System will:

- Alternately flash the four turn signals.
- Sound the optional siren.

Duration: The alarm will stop within 30 seconds and if no motion is detected, the alarm will not restart.

However, if motorcycle motion continues the system will repeat the 30 second alarm and recheck for motion. The alarm will repeat this 30 second alarm cycle for five minutes (10 cycles) or until the alarm is deactivated.

NOTE:

The alarm will also activate the LED, vibration or audible modes of a Harley-Davidson Security Pager. A pager can operate either in silent or in combination with an optional Smart Siren. The range of a pager can be up to 0.5 mi 0.8 km . See a Harley-Davidson dealer for details.

Deactivate the Alarm

Key Fob: Bring the fob to the motorcycle. After the module identifies that the fob is present, the system will terminate the alarm.

Siren Chirp Mode (Confirmation)

Chirp Mode

In chirp mode, the siren sounds two chirps when arming, and a single chirp when disarming.

Chirpless Mode

In chirpless mode, the siren does not chirp on arming or disarming.

The siren will still provide warning chirps and sound the alarm if the motorcycle is moved or the ignition switch is turned on without the fob present.

Switching Modes

Perform the following to switch between chirp and chirpless modes.

1. With the fob present, turn the ignition switch ON.
2. When the security lamp turns off, turn the ignition switch OFF.
3. When the security lamp turns off (but before the turn signals flash twice), immediately turn the ignition switch ON.
4. When the security lamp turns off, immediately turn the ignition switch OFF.
5. When the security lamp turns off (but before the turn signals flash twice), immediately turn the ignition switch ON.
6. When the security lamp turns off, immediately turn the ignition switch OFF.
7. When the security lamp turns off (but before the turn signals flash twice), immediately turn the ignition switch ON.

Transport Mode

It is possible to arm the security system without enabling the motion detector for one ignition cycle. This allows the vehicle to be picked up and moved in an armed state, however, any attempt to start the engine when the key fob is not within range will trigger the alarm.

To Enter Transport Mode

1. Turn the ignition switch to IGN.
2. Set the engine stop switch to OFF.
3. With an assigned fob within range, turn the ignition switch from IGN to ACC.
4. Simultaneously press both the left and the right turn signal switches. This must be done within five seconds of turning the ignition switch to ACC.
5. After the turn signals flash once, turn the ignition switch to OFF and the module is armed.
6. **Confirmation:** Turn signal blinks three times when armed for one ignition cycle.

To Exit Transport Mode

Return the system to normal operation:

With the fob present, turn the ignition switch to IGN to disarm the system. To cancel the transport mode, set the engine stop switch to RUN.

Storage and Service Departments

Long-Term Parking

To maintain arming, store the fob beyond the range of the antenna - more than 20 ft 6 m away. If

the motorcycle is to be moved while parked, have the fob present.

If the motorcycle will not be operated for several months, such as during the winter season, refer to Motorcycle Storage.

Service Departments

When the motorcycle is to be left at a Harley-Davidson dealer, there are two options:

1. Leave an assigned fob with the dealer.
2. To maintain possession of the fob, ask the dealer to disable the system for service (service mode) before leaving the dealership.

Sidecar Configuration

⚠WARNING

Only Touring Harley-Davidson Motorcycles are suitable for sidecar use. Consult a Harley-Davidson dealer. Use of motorcycles other than Touring models with sidecars could result in death or serious injury. (00040a)

CAUTION

Before operating your motorcycle with sidecar attached, have a Harley-Davidson dealer install a Bank Angle Switch kit. The TSM/HFSM will not function properly if not switched to sidecar operation. (00486c)

On motorcycles with a sidecar, the turn signal module (TSM) or the Hands-Free Security Module (HFSM) must be switched from the factory solo vehicle setting to the sidecar setting. Consult a Harley-Davidson dealer for complete details.

If a sidecar is permanently removed from the motorcycle, the TSM or the HFSM must be reconfigured. Refer to the SIDECAR SERVICE MANUAL for complete details.

Fob Battery

Replacing the Battery

Replace the fob battery every year.

1. See Fob Battery. Slowly turn a thin blade in the thumbnail slot (1) on the side of the fob to separate the two halves.
2. Remove the battery (2) and discard.

   NOTE:

   Dispose of the old battery in accordance with local regulations.

3. Install a **new** battery (Panasonic 2032 or equivalent) with the positive (+) side down.
4. Align the two halves of the fob and snap together.

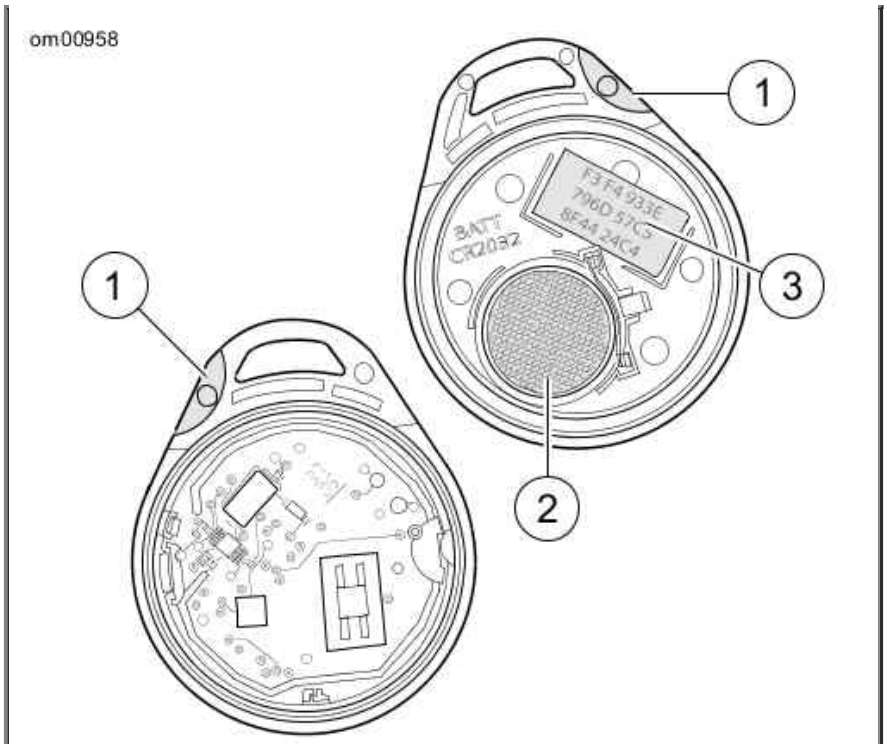

1. Thumbnail slot
2. Battery
3. Fob serial number

Fob Battery

Disconnecting Power

Siren Equipped Models

When disconnecting the battery or removing the main fuse, perform the following steps to prevent the optional siren from sounding.

1. Verify that the fob is present.
2. Turn the ignition switch to IGNITION.
3. Pull the main fuse from its holder or disconnect the battery.

Troubleshooting

Security System Indicator

If the system indicator lamp stays illuminated while riding, see a Harley-Davidson dealer.

Fob

If the Smart Security System continues to actuate warnings and alarms with the fob present, one of the following can be the cause:

1. **Electromagnetic interference:** Other electronic devices, power lines, or other electromagnetic sources can cause the Smart Security System to operate inconsistently.
    a. Verify that the fob is not in a metal enclosure or within 3.0 in 76 mm of any other electronic devices.
    b. Place the fob on the seat and turn the ignition to IGN. After the system disarms, return

the fob to a convenient location.

c. Move motorcycle at least 15 ft 5 m from the spot of interference.

d. Use the PIN to disarm the system.

NOTE:

Leaving a fob next to a computer monitor can run down the battery.

2. **Discharged fob battery:** Use the PIN to disarm the system. Replace the battery. Refer to Fob Battery.

3. **A damaged fob:** Use the PIN to disarm the motorcycle. Replacement fobs are available for purchase from a Harley-Davidson dealer.

Siren

- If the siren does not chirp two or three times on a valid arming command from the security module, the siren is either in the Chirpless Mode, not connected, not working, or the siren wiring was opened or shorted while the siren was disarmed.
- If the siren is armed and the internal siren battery is dead, shorted, disconnected, or has been charging for a period longer than 24 hours, the siren will respond with three chirps on arming instead of two.
- The internal siren battery may not charge if the vehicle's battery is less than 12.5 volts.
- If the siren enters the self-driven mode where it is powered from the siren's internal 9 volt battery, the turn signal lamps may or may not alternately flash. If the security module activates the siren, the turn signal lamps will alternately flash. If the siren has been armed and a security event occurs, and the siren is in self-driven mode, the siren will alarm for 20-30 seconds and then turn off for 5-10 seconds. This alarm cycle will be repeated ten times if the siren is in the self-driven mode.

Operation

Operating Recommendations

⚠WARNING

Motorcycles are different from other vehicles. They operate, steer, handle and brake differently. Unskilled or improper use could result in loss of control, death or serious injury. (00556c)

- Take a rider training course.
- Read Owner's Manual before riding, adding accessories or servicing.
- Wear a helmet, eye protection and protective clothing.
- Never tow a trailer.

CAUTION

Do not run the engine at extremely high RPM with clutch disengaged or transmission in neutral. Running an engine at high RPM can result in engine damage. (00177a)

CAUTION

Do not exceed the maximum safe RPM specified below under any conditions. Exceeding the maximum safe engine RPM can result in equipment damage. (00248a)

- The maximum recommended safe engine speed is 5500 rpm.
- Do not idle engine unnecessarily for more than a few minutes with motorcycle standing still.

CAUTION

Air-cooled engines require air movement over the cylinders and heads to maintain proper operating temperature. Extended periods of idling or parade duty can overheat the engine, resulting in serious engine damage. (00178a)

An engine running long distances at high speed must be given closer than ordinary attention to avoid overheating and possible engine damage.

This applies particularly to a motorcycle equipped with windshield and fairing.

NOTE:

Have the engine checked regularly and keep it well tuned.

⚠WARNING

When riding on wet roads, brake efficiency and traction are greatly reduced. Failure to use care when braking, accelerating or turning on wet roads can cause loss of control, which could result in death or serious injury. (00041a)

NOTE:

When descending upon a long, steep grade, downshift and use engine compression together with intermittent application of both brakes to slow the motorcycle.

⚠WARNING

Continuous use of brake causes overheating and reduced efficiency, which could result in death or serious injury. (00042a)

⚠WARNING

Do not tow a disabled motorcycle. Towing can adversely affect stability and handling, which could result in death or serious injury. (00017a)

Break-in Riding Rules

The First 500 Miles (800 Kilometers)

The sound design, quality materials, and workmanship that are built into your new Harley-Davidson will give you optimum performance right from the start.

To allow your engine to wear-in its critical parts, we recommend that you observe the riding rules provided below for the first 500 mi 800 km .

1. During the first 50 mi 80 km of riding, keep the engine speed below 3000 rpm in any gear. Do not lug the engine by running or accelerating at very low rpm, or by running at high rpm longer than needed for shifting or passing.

2. Up to 500 mi 800 km , vary the engine speed and avoid operating at any steady engine speed for long periods. Engine speed up to 3500 rpm in any gear is permissible.

3. Drive slowly and avoid fast starts at wide open throttle until the engine has warmed up.
4. Avoid lugging the engine by not running the engine at very low speeds in higher gears.
5. Avoid hard braking. Break-in new brakes with moderate use for the first 200 mi 300 km .

Pre-Riding Checklist

⚠WARNING

Read the CONTROLS AND INDICATORS section before riding your motorcycle. Failure to understand the operation of the motorcycle could result in death or serious injury. (00043a)

Before riding your motorcycle at any time, make a general inspection to be sure it is in safe riding condition.

⚠WARNING

Stop the engine when refueling or servicing the fuel system. Do not smoke or allow open flame or sparks near gasoline. Gasoline is extremely flammable and highly explosive, which could result in death or serious injury. (00002a)

⚠WARNING

Avoid spills. Slowly remove filler cap. Do not fill above bottom of filler neck insert, leaving air space for fuel expansion. Secure filler cap after refueling. Gasoline is extremely flammable and highly explosive, which could result in death or serious injury. (00028a)

⚠WARNING

Use care when refueling. Pressurized air in fuel tank can force gasoline to escape through filler tube. Gasoline is extremely flammable and highly explosive, which could result in death or serious injury. (00029a)

1. Verify fuel is present in tank and add fuel if required.
2. Adjust mirrors to proper riding positions.
3. Check the oil level. Add oil if necessary.
4. Check controls to make sure they operate properly. Operate the front and rear brakes, throttle, clutch and shifter. All controls should operate freely without binding.
5. Check steering for proper operation by turning the handlebars through the full operating range. Handlebars should turn smoothly without binding.

⚠WARNING

Be sure tires are properly inflated, balanced, undamaged, and have adequate tread. Inspect your tires regularly and see a Harley-Davidson dealer for replacements. Riding with excessively worn, unbalanced, improperly inflated, overloaded or damaged tires can lead to tire failure and

adversely affect stability and handling, which could result in death or serious injury. (00014b)

6. Check tire condition, pressure and motorcycle loading. Incorrect pressure and excessive loading can lead to tire or wheel failure, and can affect handling and stability. Refer to Specified Tires for correct inflation pressure.

⚠WARNING

Be sure headlamp, tail and stop lamp and turn signals are operating properly before riding. Poor visibility of rider to other motorists can result in death or serious injury. (00478b)

7. Check all electrical equipment and switches including the headlamp, stop lamp, turn signals and horn for proper operation.
8. Check for any fuel, oil or hydraulic fluid leaks.
9. Visually check drive belt for wear or damage.
10. Service your motorcycle as necessary.

Starting the Engine

General

CAUTION

The engine should be allowed to run slowly for 15-30 seconds. This will allow the engine to warm up and let oil reach all surfaces needing lubrication. Failure to comply can result in engine damage. (00563b)

Rolling the throttle before starting the motorcycle is unnecessary.

Starting

⚠WARNING

Shift transmission to neutral before starting engine to prevent accidental movement, which could result in death or serious injury. (00044a)

1. Turn ignition switch to IGNITION position. Do not roll the throttle.
2. See Right Handlebar Controls: Touring Models (typical). Turn the off/run switch to RUN position.

   NOTE:

   The engine lamp will light for approximately 4 seconds and you will hear the fuel pump purr for approximately 2 seconds as it operates to fill the fuel lines with gasoline.

3. Squeeze the clutch lever in against the handgrip.
4. Raise the jiffy stand (required on international models).
5. Press the starter button to start the motorcycle.

6. When the engine has started, you can operate your motorcycle as you normally would after raising the jiffy stand.

NOTES:

- *If it is necessary to start the motorcycle with the transmission in gear (green neutral lamp off), the interlock circuitry requires the clutch be disengaged by pulling the clutch lever in against the left handgrip. Apply the brake to prevent movement of the motorcycle.*
- *The ABS indicator lamp will remain on until vehicle is moving approximately 3 mph 5 km/h .*

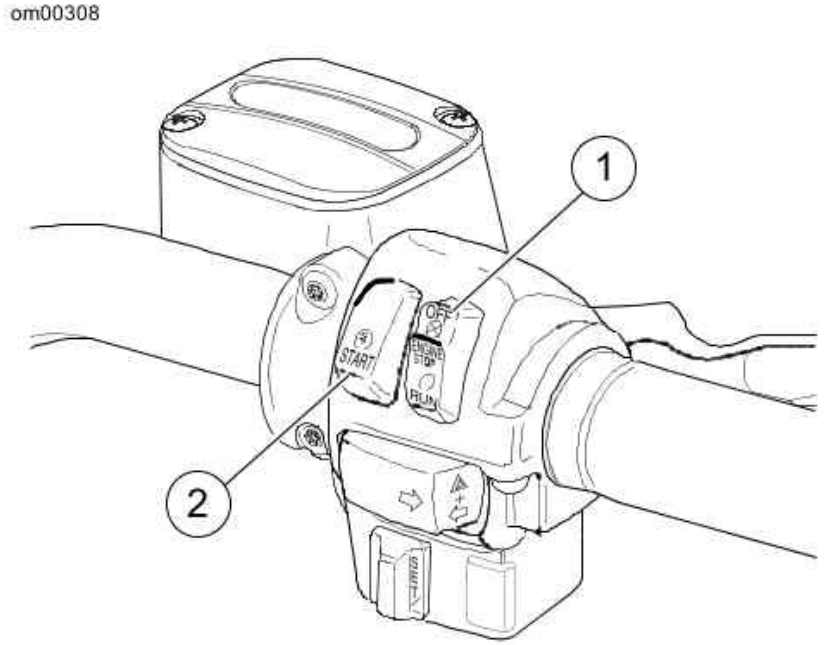

1. Engine off/run switch
2. Engine start switch

Right Handlebar Controls: Touring Models (typical)

Automatic Compression Release (ACR)

Vehicles with Twin Cam 103 and larger engines are equipped with an Automatic Compression Release (ACR). During starting, a small auxiliary valve in the cylinder head is opened automatically by the ECM. The open valve releases the air compressed in the cylinder heads and allows the starter motor to turn the high compression engine over at a faster rate to aid starting.

After starting and during normal operation, the ACR valves remain closed.

Engine Idle Temperature Management System

For those riders who frequently find themselves in riding conditions where the vehicle is subjected to prolonged idle conditions or traffic congestion, the motorcycle is equipped with an Engine Idle Temperature Management System (EITMS) to provide limited cooling of the rear cylinder.

Operation

When engine temperature reaches a predetermined point, the EITMS will turn off the rear cylinder fuel injector. Idle speed will be maintained, however the rear cylinder will become an "air pump" which will work to cool the engine.

EITMS will activate (rear cylinder will turn off) when **all** of the following conditions are met:

NOTE:

Refer to position 5 in the VIN Breakdown Harley-Davidson VIN Breakdown: 2013 Touring Models to identify configuration calibration.

- Engine temperature exceeds 284 °F 140 °C (all except configuration J and L) or 324 °F 162 °C (configuration J and L only)
- Twist grip opening is at idle
- Vehicle speed under 1 mph 2 km/h
- Engine speed under 1200 rpm

EITMS will disable (rear cylinder will again fire) if **any one** of the following occurs:

- Engine temperature falls below 275 °F 135 °C (all calibrations)
- Twist grip opening is above idle
- Vehicle speed exceeds 2 mph 3 km/h
- Engine speed exceeds 1350 rpm
- Clutch is released with vehicle in gear

When the engine is in EITMS operation, you may notice a difference in idle cadence. Additionally, there may be a unique exhaust odor. These are both considered to be normal conditions.

Enabling/Disabling EITMS

Enabled: The EITMS engine cooling feature will automatically activate whenever the vehicle comes to a complete stop and is idling during elevated temperature conditions. When the feature is enabled, it may not activate under cool riding conditions.

Disabled: The EITMS feature is not active under any conditions.

EITMS can be enabled or disabled by performing the following procedure.

1. Turn the ignition switch to the ON position and push the engine OFF/RUN switch on the right handlebar to the RUN position (the motorcycle may be running or not running).

2. Push the throttle to roll-off position and hold.

3. See Instrument Lamps. After approximately 3 seconds, the cruise indicator lamp will either flash green (EITMS enabled) or orange (EITMS disabled).

   NOTE:

   A flashing lamp indicates the EITMS setting. A solid (non-flashing) lamp indicates the cruise control setting.

4. Repeat the procedure as needed to enable or disable EITMS.

NOTE:

The EITMS setting will remain in effect until it is changed by the rider or dealer. It does not have to be reconfigured at each startup.

Stopping the Engine

---

1. Stop the engine by turning the engine OFF/RUN switch on the right handlebar to OFF.

2. Turn the ignition switch to OFF. If the engine should be stalled or stopped in any way, turn the ignition switch to OFF at once to prevent battery discharge.

Shifting Gears

Stopped, Engine Off

Squeeze in the clutch lever to fully disengage the clutch. Gears may not engage because the transmission shafts are not turning and shifter components are not lined up. Rock the motorcycle

backward and forward while lightly pressing on the shift lever.

Starting from a Stop

CAUTION

The clutch must be fully disengaged before attempting a gear shift. Failure to fully disengage the clutch can result in equipment damage. (00182a)

NOTE:

Always start the engine with the transmission in neutral. Always start forward motion in first gear.

1. With the engine running and the jiffy stand retracted, pull the clutch hand lever in against the handlebar grip to fully disengage the clutch.
2. Press the gear shift lever down to end of its travel and release. The transmission is now in first gear.
3. Ease out the clutch lever and at the same time, gradually open the throttle.

Upshift (Acceleration)

See Shifting Sequence: Upshift. Engage the next higher gear when the motorcycle reaches the shifting speed. Refer to Upshift (Acceleration) Gear Speeds: Six Speed.

Upshift (Acceleration) Gear Speeds: Six Speed

GEAR CHANGE	mph	km/h
First to second	15	25
Second to third	25	40
Third to fourth	35	55
Fourth to fifth	45	70
Fifth to sixth	55	85

1. Close the throttle.
2. Disengage the clutch (pull the clutch lever in).
3. Lift the gear shift lever up to the end of its travel and release.
4. Ease out the clutch lever and gradually open the throttle.
5. Repeat the previous steps to engage remaining gears.

NOTES:

- *Disengage the clutch completely before each gear change.*
- *Partially open the throttle so the engine does not drag when the clutch lever is released.*

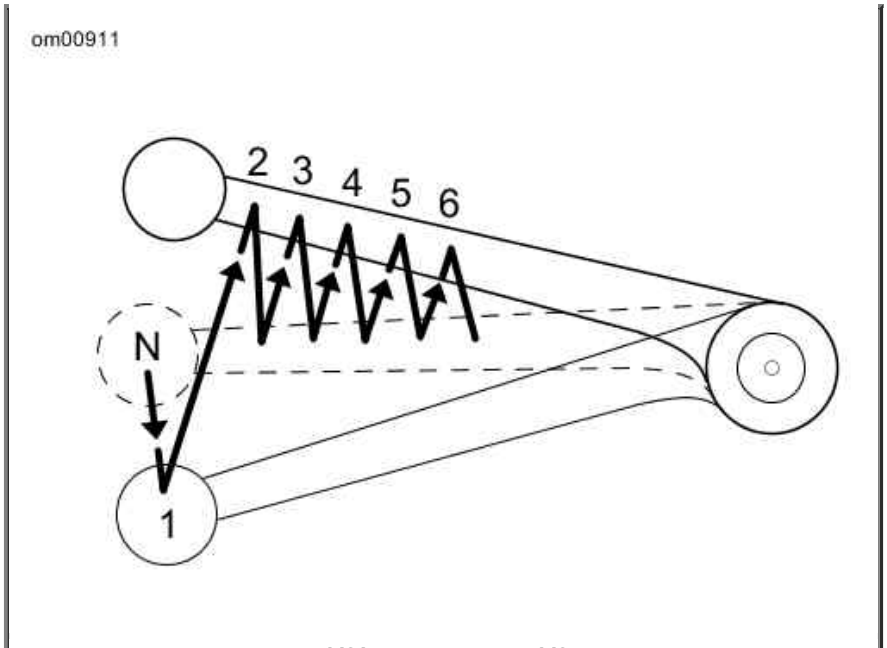

Shifting Sequence: Upshift

Downshift (Deceleration)

⚠WARNING

Do not downshift at speeds higher than those listed. Shifting to lower gears when speed is too high can cause the rear wheel to lose traction and lead to loss of vehicle control, which could result in death or serious injury. (00045b)

See Shifting Sequence: Downshift. When engine speed decreases, as when climbing a hill or slowing for a turn, shift to the next lower gear. Refer to Downshift (Deceleration) Gear Speeds: Six Speed.

Downshift (Deceleration) Gear Speeds: Six Speed

GEAR CHANGE	mph	km/h
Sixth to fifth	50	80
Fifth to fourth	40	65
Fourth to third	30	50
Third to second	20	30
Second to first	10	15

NOTE:

The shifting points shown in the table are recommendations. Vehicle owners may determine that their own individual shifting patterns may differ from those stated and are additionally appropriate for individual riding styles.

1. Close the throttle.
2. Disengage the clutch (pull the clutch lever in).
3. Press the gear shift lever down to the end of its travel and release.
4. Ease out the clutch lever and gradually open the throttle.
5. Repeat the previous steps to engage remaining gears.

NOTES:

- *Disengage the clutch completely before each gear change.*
- *Partially open the throttle so the engine does not drag when clutch lever is released.*

CAUTION

Shift to neutral before stopping engine. Shifting mechanism can be damaged by shifting gears while engine is stopped. (00183a)

The gear shifter mechanism permits shifting the transmission to neutral from either first or second gear.

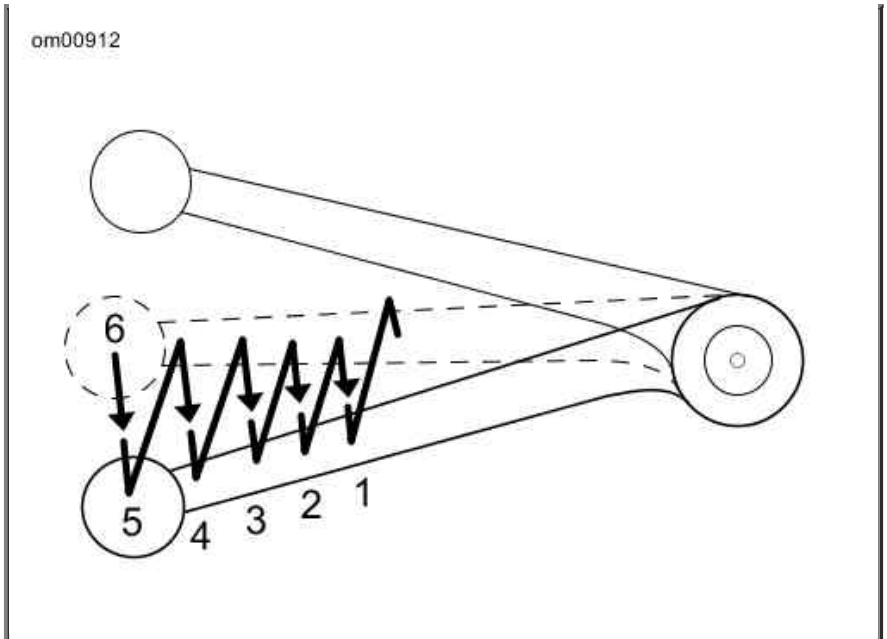

Shifting Sequence: Downshift

Maintenance and Lubrication

Safe Operating Maintenance

⚠WARNING

Perform the service and maintenance operations as indicated in the regular service interval table. Lack of regular maintenance at the recommended intervals can affect the safe operation of your motorcycle, which could result in death or serious injury. (00010a)

⚠WARNING

If you operate your motorcycle under adverse conditions (severe cold, extreme heat, very dusty environment, very bad roads, through standing water, etc.), you should perform the regular maintenance intervals more frequently to ensure the safe operation of your motorcycle. Failure to maintain your motorcycle could result in death or serious injury. (00094a)

CAUTION

When lifting a motorcycle using a jack, be sure jack

contacts both lower frame tubes where down tubes and lower frame tubes converge. Never lift by jacking on cross-members, oil pan or other housings. Failure to comply can cause serious damage resulting in the need to perform major repair work. (00586c)

Good maintenance creates a safe motorcycle. A careful check of certain equipment must be made after periods of storage. Also, frequently inspect the motorcycle between the regular service intervals to determine if additional maintenance is necessary.

Check the following items:

1. Tires for correct pressure, excessive wear, or any signs of tire damage.
2. Belt for proper tension, wear or damage.
3. Brakes, steering and throttle for responsiveness and freedom from binding.
4. Brake fluid level and condition. Hydraulic lines and fittings for leaks. Also, check brake pads and discs for wear.
5. Cables for fraying or crimping and free operation.
6. Engine oil and primary chaincase/transmission fluid levels.
7. Headlamp, tail lamp, brake lamp and turn signals for proper operation.

Break-in Maintenance

NOTE:

The performance of new motorcycle initial service is required to keep your new motorcycle warranty in force and for proper emissions system operation.

After a new motorcycle has been ridden its first 1000 mi 1600 km , it should be taken to an authorized Harley-Davidson dealer for initial service operations. Refer to Regular Service Intervals: 2013 Touring Models.

Engine Lubrication

⚠CAUTION

Prolonged or repeated contact with used motor oil may be harmful to skin and could cause skin cancer. Promptly wash affected areas with soap and water. (00358b)

⚠CAUTION

If swallowed, do not induce vomiting. Contact a physician immediately. In case of contact with eyes, immediately flush with water. Contact a physician if irritation persists. (00357c)

CAUTION

Do not switch lubricant brands indiscriminately because some lubricants interact chemically when mixed. Use of inferior lubricants can damage the engine. (00184a)

Engine oil is a major factor in the performance and service life of the engine. Always use the proper grade of oil for the lowest temperature expected before the next scheduled oil change. Refer to Recommended Engine Oils.

This motorcycle was originally equipped with GENUINE HARLEY-DAVIDSON H-D 360 MOTORCYCLE OIL 20W50. H-D 360 is the preferred oil under normal operating conditions. If operation under extreme cold or heat are expected, refer to Recommended Engine Oils for alternative choices.

If necessary and H-D 360 is not available, add oil certified for diesel engines. Acceptable designations include: CH-4, CI-4 and CJ-4. The preferred viscosities, in descending order are: 20W50, 15W40 and 10W40.

At the first opportunity, see an authorized dealer to change back to 100 percent Harley-Davidson oil.

Recommended Engine Oils

TYPE	VISCOSITY	RATING	LOWEST AMBIENT TEMPERATURE	COLD WEATHER STARTS BELOW 50 °F (10 °C)
Screamin' Eagle SYN 3 Full Synthetic Motorcycle Lubricant	SAE 20W50	HD 360	Above 30 °F -1 °C	Excellent
Genuine Harley-Davidson H-D 360 Motorcycle Oil	SAE 20W50	HD 360	Above 40 °F 4 °C	Good
Genuine Harley-Davidson H-D 360 Motorcycle Oil	SAE 50	HD 360	Above 60 °F 16 °C	Poor
Genuine Harley-Davidson H-D 360 Motorcycle Oil	SAE 60	HD 360	Above 80 °F 27 °C	Poor
Genuine Harley-Davidson H-D 360 Motorcycle Oil	SAE 10W40	HD 360	Below 40 °F 4 °C	Excellent

Engine Oil Level

⚠CAUTION

Prolonged or repeated contact with used motor oil may be harmful to skin and could cause skin cancer. Promptly wash affected areas with soap and water. (00358b)

CAUTION

Do not overfill oil. Doing so can result in oil carryover to the air cleaner leading to equipment damage and/or equipment malfunction. (00190b)

NOTE:

The oil level marks for checking with motorcycle upright or on jiffy stand are on the same side of the dipstick. Carefully read dipstick when checking oil level.

Check engine oil level at each complete fuel refill.

Oil Level Cold Check

1. For pre-ride inspection, place vehicle on level ground resting on its jiffy stand (unless sidecar is attached).
2. See Engine Oil Filler Cap. Remove filler plug/dipstick and wipe off the dipstick. Insert the dipstick and tighten into the fill spout.

NOTE:

Oil level on a cold engine should never be above the midway point.

3. See Engine Oil Dipstick. Remove the dipstick and verify oil level. Remove filler plug/dipstick and check oil level. The correct oil level is midway (2) between the ADD QT and FULL HOT marks on the dipstick.

NOTE:

If oil level is at or below the ADD QT mark, add only enough oil to bring the level midway (2) between the ADD QT and FULL HOT marks. Never bring the level to the FULL HOT mark on a cold engine.

Oil Level Hot Check

CAUTION

Do not allow hot oil level to fall below Add/Fill mark on dipstick. Doing so can result in equipment damage and/or equipment malfunction. (00189a)

NOTE:

Perform engine oil level hot check only with engine at normal operating temperature.

1. Ride motorcycle until engine is at normal operating temperature.
2. Place vehicle on level ground resting on its jiffy stand (unless sidecar is attached). Allow engine to idle for 1-2 minutes. Turn engine off.
3. See Engine Oil Filler Cap. Remove filler plug/dipstick and wipe off the dipstick. Insert the dipstick and tighten into the fill spout.
4. See Engine Oil Dipstick. Remove filler plug/dipstick and check oil level. Oil level must register between the ADD QT and FULL HOT marks. If oil level is at or below the ADD QT mark, add only enough oil to bring the level to the FULL HOT mark. Do not overfill.

   NOTE:

   Use only recommended oil specified in Engine Lubrication.

5. Start engine and carefully check for oil leaks around drain plug and oil filter.

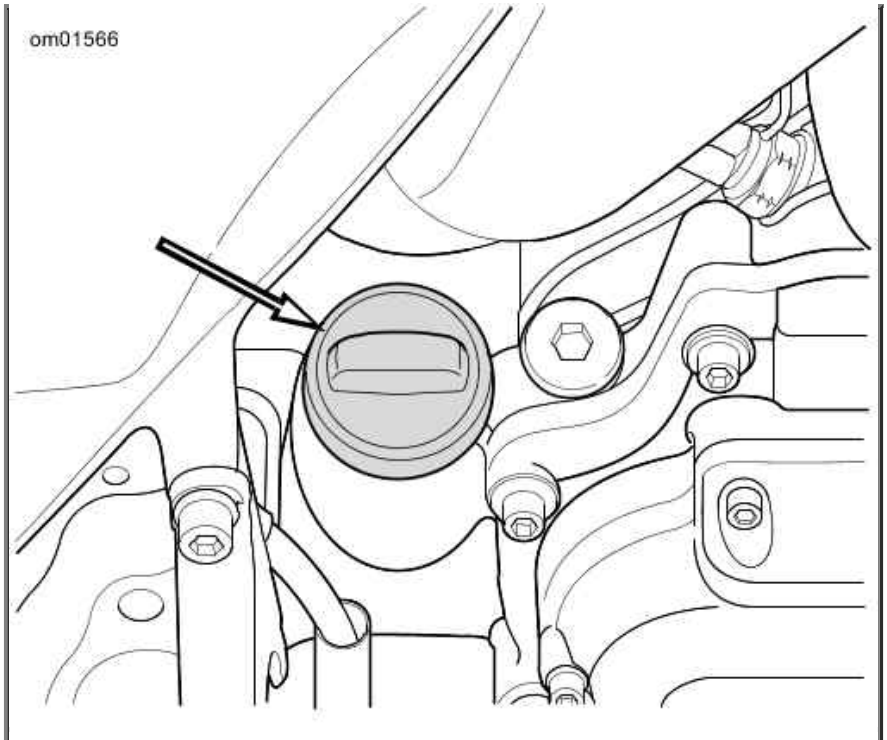

Engine Oil Filler Cap

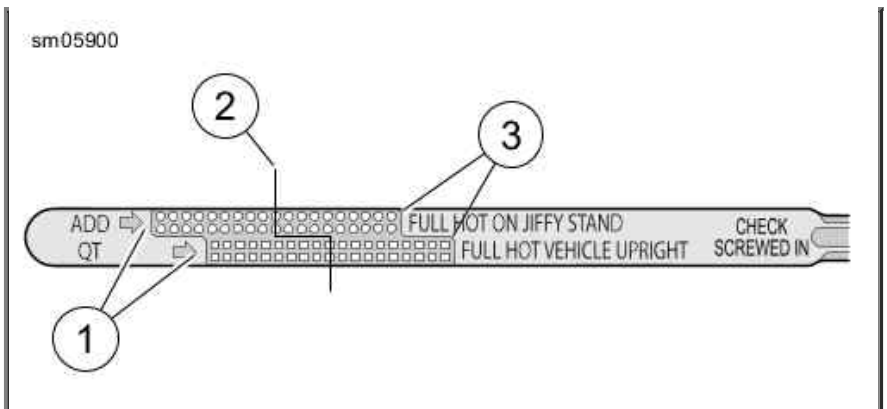

1. ADD QT (lower) mark
2. Cold check level
3. FULL (hot check) mark

Engine Oil Dipstick

Changing Oil and Oil Filter

Refer to Regular Service Intervals: 2013 Touring Models. Oil should be changed after the first 1000 miles 1600 kilometers for a **new** engine and at regular intervals in normal service at warm or moderate temperatures.

Oil change intervals should be more frequent in cold weather or severe operating conditions. See Winter Lubrication.

Twin Cam equipped vehicles require the premium oil filter (Part No. 63798-99A Chrome or Part No. 63731-99A Black).

CAUTION

Do not switch lubricant brands indiscriminately because some lubricants interact chemically when mixed. Use of inferior lubricants can damage the engine. (00184a)

⚠WARNING

Be sure that no lubricants or fluids get on tires, wheels or brakes when changing fluid. Traction can be adversely affected, which could result in loss of control of the motorcycle and death or serious injury. (00047d)

1. Ride motorcycle until oil is at normal operating temperature. Turn engine off.
2. Remove filler plug/dipstick.
3. See Oil Pan. Remove the oil drain plug (2). Do not remove hex plug (3) or transmission drain plug (1). Allow oil to drain completely.
4. Inspect the oil drain plug O-ring for cuts, tears or signs of deterioration. Replace as necessary.

CAUTION

Use Harley-Davidson oil filter wrench for filter removal. This tool can prevent damage to crankshaft position sensor and/or sensor cable. (00192b)

5. Remove the oil filter using OIL FILTER WRENCH HD-42311 or OIL FILTER WRENCH HD-44067-A and hand tools. Do not use with air tools.
6. Clean the oil filter mount flange of any old gasket material.
7. See Applying Thin Oil Film. Lubricate gasket with clean engine oil and install **new** oil filter on filter mount. Hand-tighten oil filter one-half to three-quarters of a turn after gasket first contacts filter mounting surface. Do NOT use oil filter wrench for installation.
8. Install engine oil drain plug and tighten to 14-21 ft-lbs (19.0-28.5 Nm).

   NOTE:

   Use the proper grade of oil for the lowest temperature expected before the next oil change. Refer to Recommended Engine Oils for recommended oil.

9. Initially add 3.0 quarts 2.8 liters of engine oil.
10. Verify proper oil level. See Engine Oil Level.
    a. Check engine oil level using **COLD CHECK** procedure.
    b. Start engine and carefully check for oil leaks around drain plug and oil filter.
    c. Check engine oil level using **HOT CHECK** procedure.

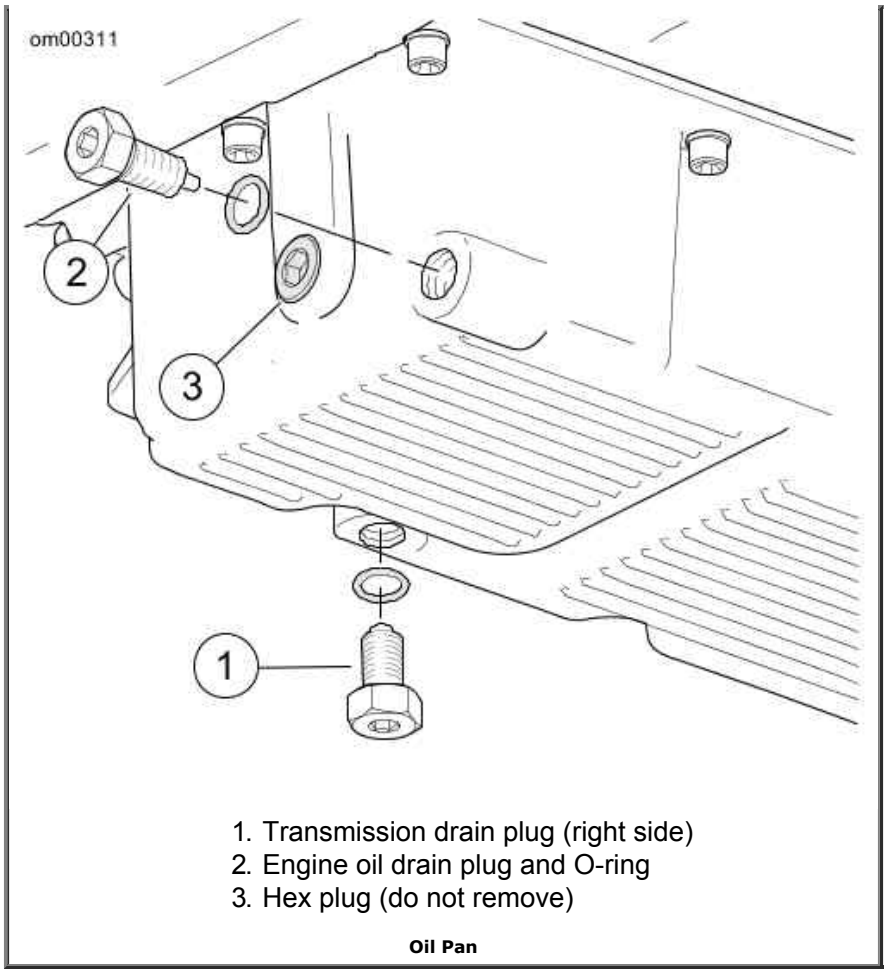

1. Transmission drain plug (right side)
2. Engine oil drain plug and O-ring
3. Hex plug (do not remove)

Oil Pan

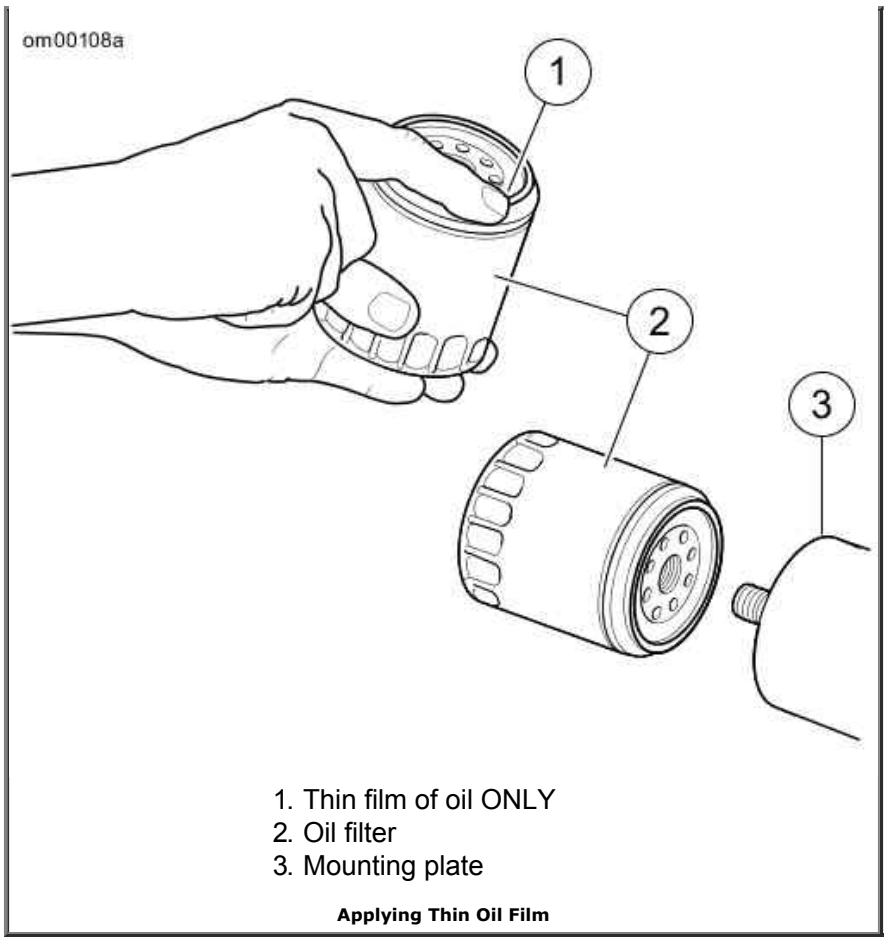

1. Thin film of oil ONLY
2. Oil filter
3. Mounting plate

Applying Thin Oil Film

Winter Lubrication

Change engine oil often in colder climates. If motorcycle is frequently used for trips less than 15 mi 24 km , in ambient temperatures below 60 °F 16 °C , reduce oil change intervals to 1500 mi

2400 km .

NOTE:

The further below freezing the temperature drops, the shorter the oil change interval should be.

Water vapor is a normal by-product of combustion in any engine. During cold weather operation, some water vapor condenses to liquid form on the cool metal surfaces inside the engine. In freezing weather this water will become slush or ice. Over time, accumulated slush or ice may block the oil lines and cause engine damage.

If the engine is run frequently and allowed to thoroughly warm up, most of this water will become vapor again and will be blown out through the crankcase breather.

If the engine is not run frequently and not allowed to thoroughly warm up, this water will accumulate, mix with the engine oil and form a sludge that is harmful to the engine.

Oil Cooler

Motorcycles with a Twin Cam 103 or larger engine are equipped with a factory installed oil cooler. Always keep the cooler clean and free from dirt and debris. This will help maintain maximum cooling efficiency.

Checking Transmission Lubricant

Recommended Lubricant

LUBRICANT	REFILL QUANTITY *
FORMULA+ TRANSMISSION AND PRIMARY CHAIN LUBRICANT or SCREAMIN' EAGLE SYN3 FULL SYNTHETIC MOTORCYCLE LUBRICANT 20W50	28 oz 0.83 L
*Approximate. Check and add as needed to bring level within specification.	

1. Park the motorcycle on a level surface leaning on the jiffy stand.
2. See Transmission Dipstick Location. Remove the transmission lubricant dipstick. Wipe the dipstick clean.
3. Insert dipstick into transmission. Thread dipstick in until O-ring makes contact with case. Do not tighten.
4. See Transmission Dipstick Lubricant Level. Remove the dipstick. Check lubricant level on dipstick.

CAUTION

Mixing mineral-based lubricants with SYN-3 in the transmission can damage the transmission. (00452b)

5. The level should be between the A and F marks. Add lubricant if necessary. Refer to Recommended Lubricant.
6. Install the dipstick. Tighten to 25-75 in-lbs (2.8-8.5 Nm).

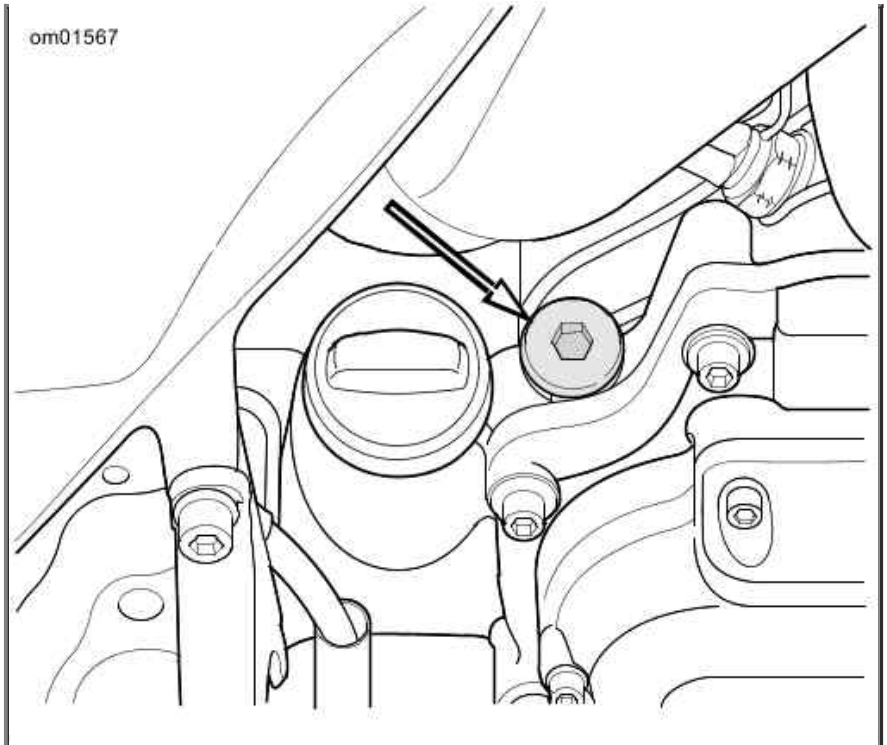

Transmission Dipstick Location

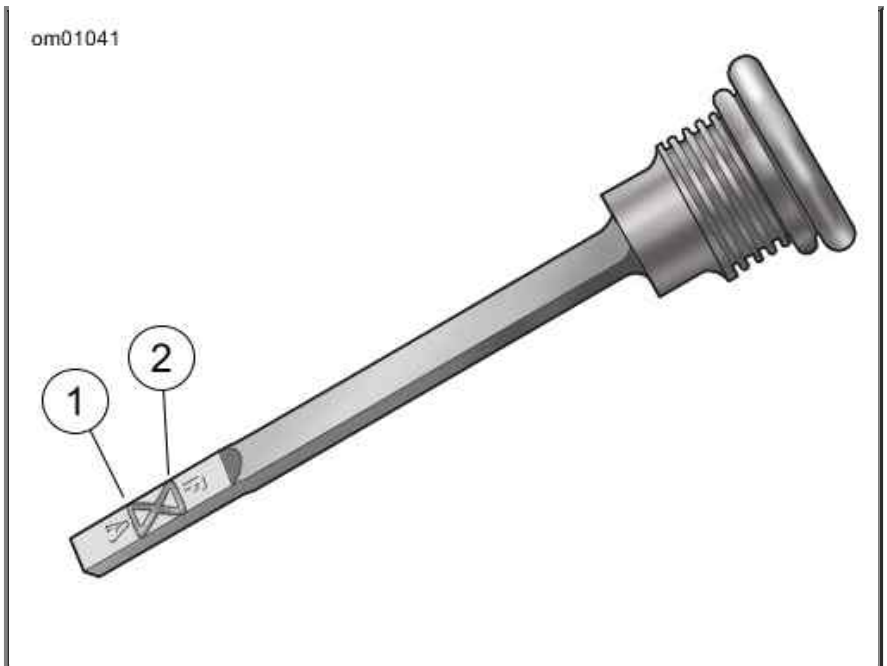

1. Add
2. Full

Transmission Dipstick Lubricant Level

Changing Transmission Lubricant

1. See Transmission Dipstick Location. Remove transmission filler plug/dipstick.

CAUTION

When draining or adding lubricant, do not allow dirt, debris or other contaminants to enter the engine. (00198a)

⚠WARNING

Be sure that no lubricants or fluids get on tires, wheels or brakes when changing fluid. Traction can be adversely

affected, which could result in loss of control of the motorcycle and death or serious injury. (00047d)

2. See Oil Pan. Remove transmission drain plug. Drain lubricant into a suitable container.
3. Clean and inspect drain plug and O-ring.

CAUTION

Do not over-tighten filler or drain plug. Doing so could result in a lubricant leak. (00200b)

4. Install drain plug with O-ring. Tighten to 14-21 ft-lbs (19.0-28.5 Nm). Do not over-tighten.
5. Fill the transmission with 28 oz 0.83 L of recommended Harley-Davidson lubricant. Refer to Recommended Lubricant.
6. Check lubricant level and add enough lubricant to bring the level between the A(dd) and F(ull) marks. See Checking Transmission Lubricant.
7. Install filler plug/dipstick. Tighten to 25-75 in-lbs (2.8-8.5 Nm).

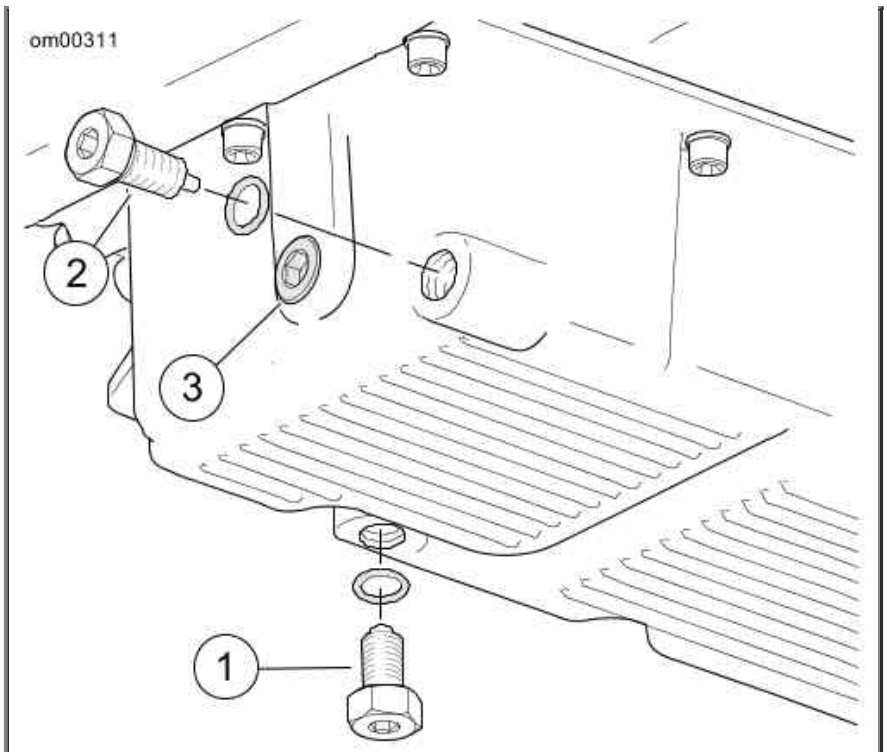

1. Transmission drain plug (right side)
2. Engine oil drain plug and O-ring
3. Hex plug (do not remove)

Oil Pan

Primary Chaincase Lubricant

General

NOTE:

The chaincase lubricant level should be drained and refilled at specified intervals. Refer to Regular Service Intervals: 2013 Touring Models.

Check Lubricant Level

1. Ride motorcycle until engine is warmed up to normal operating temperature.
2. Stand vehicle upright on a level surface, so that primary chaincase is level.

⚠WARNING

To prevent accidental vehicle start-up, which could cause death or serious injury, disconnect negative (-) battery cable before proceeding. (00048a)

3. Disconnect negative battery cable. See Battery.
4. See Primary Chaincase Cover. Remove clutch inspection cover from primary chaincase cover.
5. Remove and discard seal ring from cover.
6. If the fluid level is visible through the clutch inspection cover opening, it is adequate. If necessary, add enough of the recommended GENUINE Harley-Davidson lubricant until it is visible along the bottom portion of the clutch assembly. Refer to Recommended Primary Chaincase Lubricant.
7. Refer to Changing Chaincase Lubricant to install seal ring and clutch inspection cover.
8. Connect battery negative cable. Tighten to 60-70 in-lbs (6.8-7.9 Nm).

CAUTION

Do not overfill the primary chaincase with lubricant. Overfilling can cause rough clutch engagement, incomplete disengagement, clutch drag and/or difficulty in finding neutral at engine idle. (00199b)

Recommended Primary Chaincase Lubricant

LUBRICANT	REFILL QUANTITY
FORMULA+ TRANSMISSION AND PRIMARY CHAIN LUBRICANT or SCREAMIN' EAGLE SYN3 FULL SYNTHETIC MOTORCYCLE LUBRICANT 20W50	38 fl oz 1.12 L (wet) 45 fl oz 1.33 L (dry)

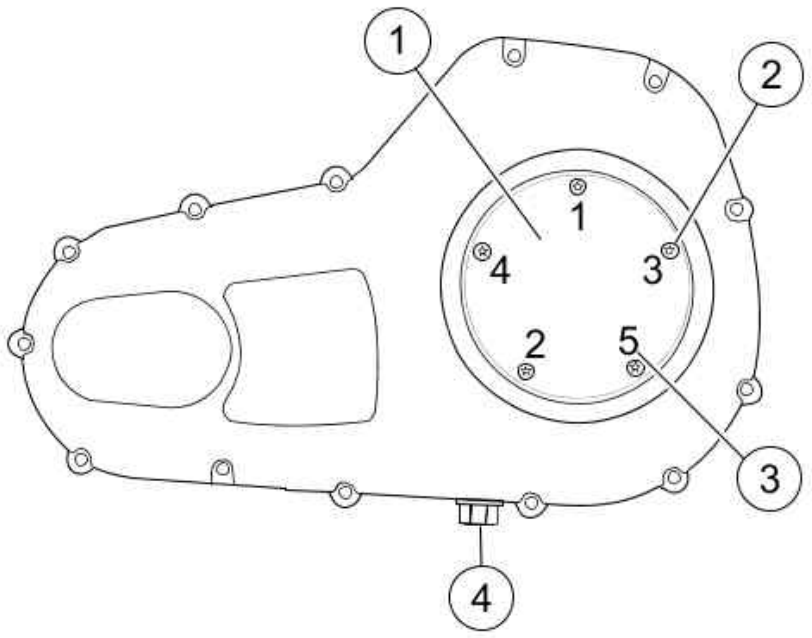

1. Clutch inspection cover
2. Screws with captive washer
3. Clutch cover torque sequence
4. Drain plug

Primary Chaincase Cover

Changing Chaincase Lubricant

CAUTION

When draining or adding lubricant, do not allow dirt, debris or other contaminants to enter the engine. (00198a)

1. Ride motorcycle until engine is warmed to normal operating temperature.

⚠WARNING

To prevent accidental vehicle start-up, which could cause death or serious injury, disconnect negative (-) battery cable before proceeding. (00048a)

2. Disconnect negative battery cable. See Battery.
3. See Primary Chaincase Cover. Remove clutch inspection cover from primary chaincase cover.
4. Remove drain plug and drain lubricant into suitable container.

   NOTE:

   Dispose of chaincase lubricant in accordance with local regulations.

5. Clean drain plug magnet. If magnet has accumulated excessive debris, inspect the condition of chaincase components.
6. Inspect drain plug O-ring for cuts, tears or deterioration. Replace as necessary.
7. Install drain plug and tighten to 14-21 ft-lbs (19.0-28.5 Nm).
8. Pour 38 fl. oz. 1.12 liters of the recommended GENUINE Harley-Davidson lubricant through

the clutch inspection cover opening. Refer to Recommended Primary Chaincase Lubricant.

NOTE:

Add 45 fl. oz. 1.33 liters only if the primary chaincase or primary chaincase cover has been removed.

CAUTION

Do not overfill the primary chaincase with lubricant. Overfilling can cause rough clutch engagement, incomplete disengagement, clutch drag and/or difficulty in finding neutral at engine idle. (00199b)

⚠WARNING

Be sure that no lubricants or fluids get on tires, wheels or brakes when changing fluid. Traction can be adversely affected, which could result in loss of control of the motorcycle and death or serious injury. (00047d)

9. Swab all lubricant from seal ring groove in clutch inspection cover and install **new** seal ring with nubs contacting ring groove walls.

10. See Primary Chaincase Cover. Install clutch inspection cover. Tighten screws in the sequence shown to 84-108 in-lbs (9.5-12.2 Nm).

11. Connect battery negative cable. Tighten to 60-70 in-lbs (6.8-7.9 Nm).

Checking Drive Belt Deflection

NOTE:

Always use BELT TENSION GAUGE HD-35381-A to measure belt deflection. Do not rely on "feel" as this can result in belts that are under tensioned. Loose belts will fail due to "ratcheting" (jumping a tooth).

Check deflection:

- At every scheduled service interval.
- With transmission in neutral.
- At loosest spot in belt.
- With motorcycle at room temperature.
- With motorcycle upright and rear wheel off the ground or on jiffy stand without rider or luggage.

⚠WARNING

To prevent accidental vehicle start-up, which could cause death or serious injury, disconnect negative (-) battery cable before proceeding. (00048a)

1. Disconnect negative battery cable. See Battery.

2. Remove left side saddlebag.

3. Slide O-ring on gauge toward 0 lbs 0 kg mark.

4. See Checking Belt Deflection. Fit cradle against bottom of belt midway between transmission sprocket and rear sprocket.

5. Push upward on knob until O-ring slides to the 10 lbs 4.5 kg mark on the tool and compare

belt deflection to scale on debris deflector.

NOTE:

Each graduation on the scale represents 1/8 in 3.2 mm of belt deflection.

6. Measure deflection at several locations around the belt. Select the loosest measurement and compare with specifications in Belt Deflection. Belt must be adjusted if not within specification.

7. Connect battery negative cable. Tighten to 60-70 in-lbs (6.8-7.9 Nm).

Belt Deflection

MODEL	INCHES	MILLIMETERS
FLHX, FLTRX	1/4-7/16	6.4-11.1
Other models	3/8-9/16	9.5-14.3

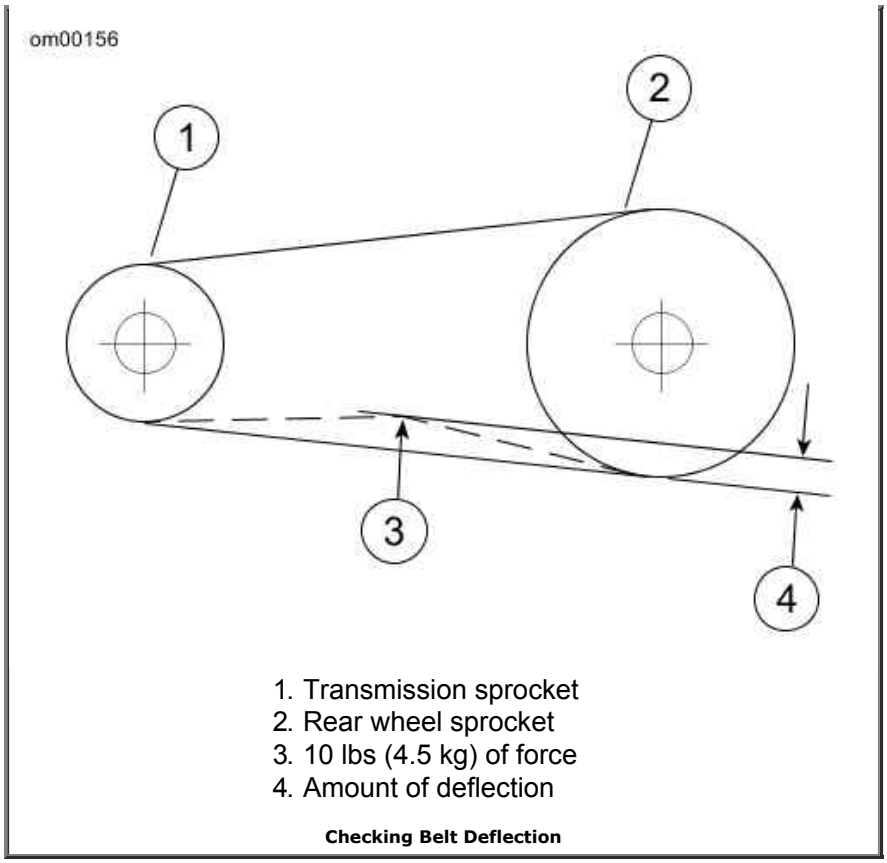

Checking Belt Deflection

Chassis Lubrication

Refer to Regular Service Intervals: 2013 Touring Models for all maintenance schedules.

1. Lubricate clutch control cable (if equipped) with HARLEY LUBE at proper intervals.

2. Lubricate front brake hand lever and clutch control hand lever with HARLEY LUBE only if necessary.

3. Pack the steering head bearings with SPECIAL PURPOSE GREASE at proper intervals.

4. Lubricate the jiffy stand mechanism with ANTI-SEIZE LUBRICANT at proper intervals.

NOTE:

For model specific information regarding the chassis lubrication, refer to the appropriate Service Manual or see a Harley-Davidson dealer.

Miscellaneous Lubrication

Hinges, Latches, Etc.

Lubricate the rub points of latches and hinges using HARLEY LUBE as required.

Lubricate the fingers on the saddlebag latches where they engage the hinge.

Oil Applications

Refer to Regular Service Intervals: 2013 Touring Models for all control connections and parts. Vehicle should be lubricated at regular intervals, particularly after washing motorcycle or driving in wet weather.

Front Fork Oil

Refer to Regular Service Intervals: 2013 Touring Models. Have a Harley-Davidson dealer drain the front fork oil and refill at proper intervals. If fork does not appear to be working properly or an appreciable amount of oil leakage should develop, see a Harley-Davidson dealer. If there is insufficient oil in either side of fork, the rebound action will be incorrect.

Fuel Filter

A fuel filter is attached to the fuel pump. See a service manual or Harley-Davidson dealer for fuel filter maintenance.

Clutch

CAUTION

The clutch control cable must be oiled and adjusted periodically to compensate for lining wear. See MAINTENANCE SCHEDULING in this manual. Failure to oil and adjust the clutch control cable can result in equipment damage. (00203b)

The need for attention to clutch and controls will be indicated by the clutch slipping under load or dragging when released. In this situation, check the control cable adjustment first. See a Harley-Davidson dealer for proper service.

Hydraulic Lifters

The hydraulic lifters are self-adjusting. They automatically adjust length to compensate for engine expansion and valve mechanism wear. This keeps the valve mechanism free of lash when the engine is running.

When starting an engine which has been turned off even for a few minutes, the valve mechanism may be slightly noisy until the hydraulic units completely refill with oil. If at any time the valve mechanism becomes abnormally noisy, other than for a short period immediately after engine is started, it is an indication that one or more of the hydraulic units may not be functioning properly.

Always check the engine oil level first since normal circulation of oil through the engine is necessary for proper operation of the hydraulic lifters.

If engine oil is at the proper level, the lifters may not be functioning properly because of dirt in the oil supply passages leading to the lifter units. See a Harley-Davidson dealer for service.

Steering Head Bearings

⚠WARNING

Adjustments to steering head bearings should be performed by a Harley-Davidson dealer. Improperly adjusted bearings can adversely affect handling and stability, which could result in death or serious injury. (00051b)

Check for proper steering head bearing adjustment and lubricate bearings using SPECIAL PURPOSE GREASE at proper intervals. Refer to Regular Service Intervals: 2013 Touring Models.

With motorcycle front end raised off the floor, be sure front fork turns freely without any binding or interference and that there is no appreciable front to rear fork movement indicating excessive bearing looseness. Steering head bearings should be adjusted according to service manual procedure, if necessary.

Brakes

Refer to Regular Service Intervals: 2013 Touring Models. Inspect brake fluid level and check brake pads and discs for wear at proper intervals.

Brake Fluid

⚠WARNING

Clean filler cap before removing. Use only D.O.T. 4 brake fluid from a sealed container. Contaminated fluid can adversely affect braking, which could result in death or serious injury. (00504c)

⚠CAUTION

Direct contact of D.O.T. 4 brake fluid with eyes can cause irritation. Avoid eye contact. In case of eye contact flush with large amounts of water and get medical attention. Swallowing large amounts of D.O.T. 4 brake fluid can cause digestive discomfort. If swallowed, obtain medical attention. Use in well ventilated area. KEEP OUT OF REACH OF CHILDREN. (00240a)

CAUTION

D.O.T. 4 brake fluid will damage painted and body panel surfaces it comes in contact with. Always use caution and protect surfaces from spills whenever brake work is performed. Failure to comply can result in cosmetic damage. (00239b)

CAUTION

Do not allow dirt or debris to enter the master cylinder reservoir. Dirt or debris in the reservoir can cause improper operation and equipment damage. (00205c)

1. See Brake Fluid Sight Glass (typical). Look through the sight glass on the front and rear brake fluid reservoirs to check for the presence of brake fluid. If necessary, turn the handlebars from side to side or gently shake the vehicle to agitate the fluid.

- The sight glass will darken when fluid is present.
- If the sight glass remains clear, see a Harley-Davidson dealer.

NOTE:

- *If the brake system is not leaking, there should never be a need to add fluid. If the fluid level is low, the pads are probably worn and need to be replaced. By replacing the pads, the fluid level will rise.*
- *Use only DOT 4 BRAKE FLUID and replace the brake fluid every 2 years. See a Harley-Davidson dealer.*

2. Verify that the front brake lever and rear brake pedal have a firm feel when applied. If brakes are not firm, the brake system must be bled.

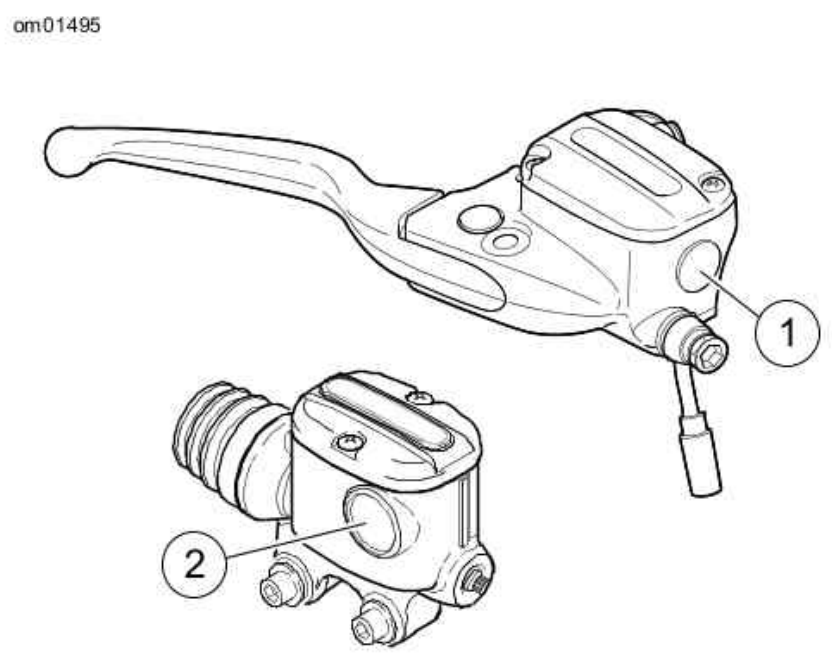

1. Sight glass, front master cylinder reservoir
2. Sight glass, rear master cylinder reservoir

Brake Fluid Sight Glass (typical)

Brake Pads

⚠WARNING

Inspect brake pads for wear at service maintenance intervals. If you ride under adverse conditions (steep hills, heavy traffic, etc.), inspect more frequently. Excessively worn brake pads can lead to brake failure, which could result in death or serious injury. (00052a)

⚠WARNING

Always replace brake pads in complete sets for correct and safe brake operation. Improper brake operation could result in death or serious injury. (00111a)

⚠WARNING

Brakes are a critical safety component. Contact a Harley-Davidson dealer for brake repair or replacement. Improperly serviced brakes can adversely affect brake

performance, which could result in death or serious injury. (00054a)

⚠WARNING

Perform routine scheduled brake maintenance. Lack of maintenance at recommended intervals can adversely affect brake performance, which could result in death or serious injury. (00055a)

⚠WARNING

Be sure wheel and brake caliper are aligned. Riding with a misaligned wheel or brake caliper can cause the brake disc to bind and lead to loss of control, which could result in death or serious injury. (00050a)

Harley-Davidson has provided your new motorcycle with the optimum brake pad friction material available. It is selected to give the best performance possible under dry, wet and high operating temperature conditions. It exceeds all regulatory requirements currently in effect. However, during some braking conditions you may experience noise. This is normal for this friction material.

1. See Brake Friction Material. Check the brake disc as it spins. The disc should run true in the brake caliper.
2. Measure the thickness of the brake pad friction material.
3. Refer to Minimum Brake Pad Friction Material Thickness. If the brake pad friction material is at the minimum thickness or less, replace the pads. Always replace brake pads in pairs. See a Harley-Davidson dealer.

Minimum Brake Pad Friction Material Thickness

in	mm
0.016	0.4

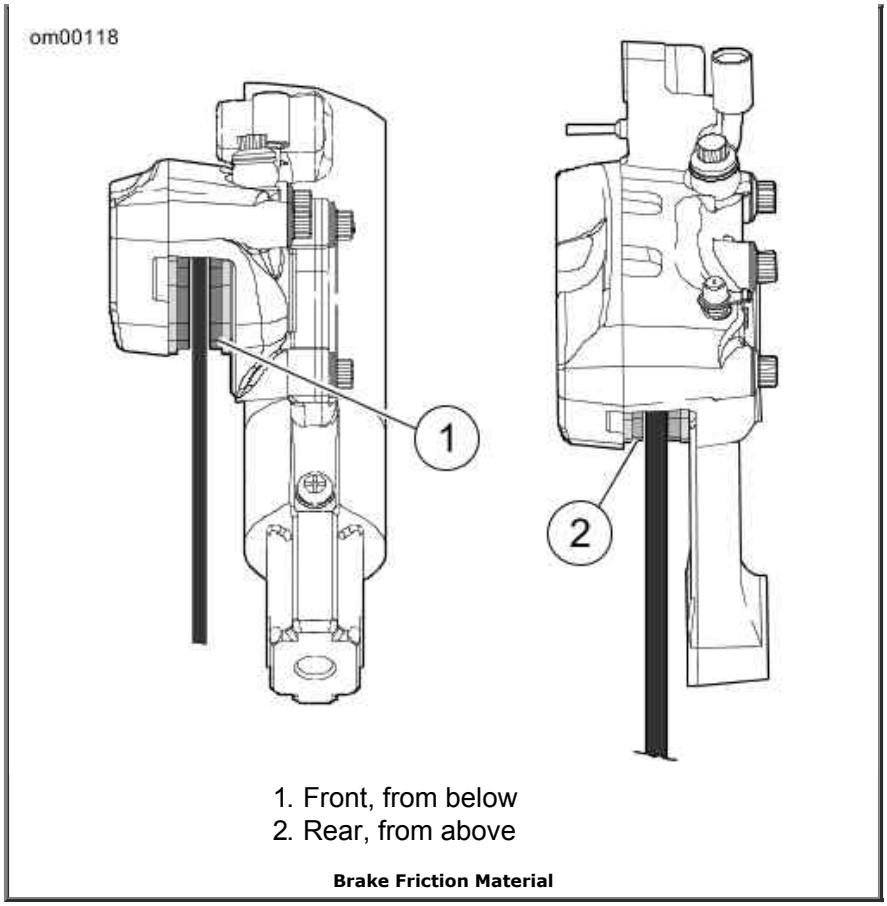

1. Front, from below
2. Rear, from above

Brake Friction Material

Tires

Refer to Specified Tires for tires and pressures.

- Be sure to keep tires properly inflated.
- Maintain correct tire pressure.
- Follow tire data for correct cold tire inflation pressure.
- Check before riding when tires are cold.

⚠WARNING

Be sure tires are properly inflated, balanced, undamaged, and have adequate tread. Inspect your tires regularly and see a Harley-Davidson dealer for replacements. Riding with excessively worn, unbalanced, improperly inflated, overloaded or damaged tires can lead to tire failure and adversely affect stability and handling, which could result in death or serious injury. (00014b)

⚠WARNING

Match tires, tubes, rim strips or seals, air valves and caps to the correct wheel. Contact a Harley-Davidson dealer. Mismatching can lead to tire damage, allow tire slippage on the wheel or cause tire failure, which could result in death or serious injury. (00023c)

Check tires for correct pressure, excessive wear, or any signs of tire damage at least weekly if in daily use. Check before each trip if only used occasionally.

Use only Harley-Davidson specified tires. Refer to Specified Tires Tire Specifications. Other tires may not fit correctly and could adversely affect stability, handling and performance.

⚠WARNING

Tires are a critical safety component. Contact a Harley-Davidson dealer for tire repair or replacement. Improper tire service can adversely affect stability and handling, which could result in death or serious injury. (00057a)

⚠WARNING

Replace punctured or damaged tires. In some cases, small punctures in the tread area may be repaired from within the removed tire by a Harley-Davidson dealer. Speed should NOT exceed 50 mph (80 km/h) for the first 24 hours after repair, and the repaired tire should NEVER be used over 80 mph (130 km/h). Failure to follow this warning could lead to tire failure and result in death or serious injury. (00015b)

⚠WARNING

Striking an object, such as a curb or pothole can cause internal tire damage. If an object is struck, have the tire inspected immediately inside and out by a Harley-Davidson dealer. A damaged tire can fail while riding and adversely affect stability and handling, which could result in death or serious injury. (00058b)

Rim Seals

⚠WARNING

Install new seal before mounting tire. Riding motorcycle without seal in place can sever valve stem causing rapid air loss leading to the loss of control, which could result in death or serious injury. (00622b)

2012 and later Touring motorcycles with profile laced wheels (wire spoked wheels with smooth round rims) are fitted with a special rim seal, a rim strip and a tubeless tire. An inner tube is not used. These rims are unique and identified by the letters MTM and the word TUBELESS etched into the rim. Never install a tire with an inner tube on these type wheels. Install a new rim seal and rim strip each time a tire is mounted on a profile laced wheel.

Steel laced rims use an inner tube and rim strip. Tubeless tires fitted with the correct size inner tubes may be used with these wheels. Install a new inner tube and rim strip each time a new tire is installed on a steel laced wheel.

Tire Replacement

Inspection

⚠WARNING

Be sure tires are properly inflated, balanced, undamaged, and have adequate tread. Inspect your tires regularly and see a Harley-Davidson dealer for replacements. Riding with excessively worn, unbalanced, improperly inflated, overloaded or damaged tires can lead to tire failure and adversely affect stability and handling, which could result

in death or serious injury. (00014b)

⚠WARNING

Replace tire immediately with a Harley-Davidson specified tire when wear bars become visible or only 1/32 in (0.8 mm) tread depth remains. Riding with a worn tire could result in death or serious injury. (00090c)

Harley-Davidson tires are equipped with wear bars that run horizontally across the tread. When a tire is worn to the point the tread wear indicator bars become visible on the tread surfaces, or 1/32 in 0.8 mm tread depth remains, the tire can:

- Be more easily damaged leading to tire failure.
- Provide reduced traction.
- Adversely affect stability and handling.

See Tire Sidewall Wear Bar Locator. Arrows on the tire sidewalls pinpoint location of wear bar indicators.

See Wear Bar Appearance. Always replace tires before the tread wear indicator bars appear.

When To Replace Tires

⚠WARNING

Use only Harley-Davidson specified tires. See a Harley-Davidson dealer. Using non-specified tires can adversely affect stability, handling or braking, which could result in death or serious injury. (00024b)

New tires are needed if any of the following conditions exist (refer to Specified Tires for the specified replacement tires):

1. Tread wear indicator bars become visible on the tread surfaces.
2. Tire cords or fabric become visible through cracked sidewalls, snags or deep cuts.
3. Bumps, bulges or slits in the tire.
4. Punctures, cuts, or other damage to the tire that cannot be repaired.

When installing tires on rims, do not rely on tread design to determine direction of rotation. Always be sure the rotational arrows molded into the sidewalls point in the direction of rotation when the vehicle is moving forward.

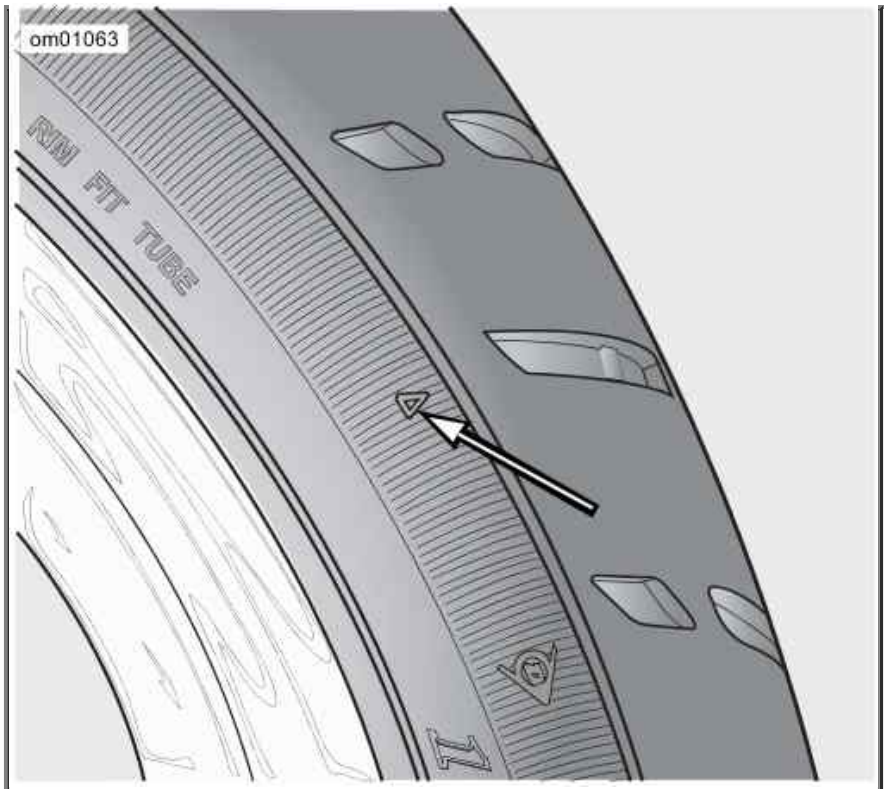

Tire Sidewall Wear Bar Locator

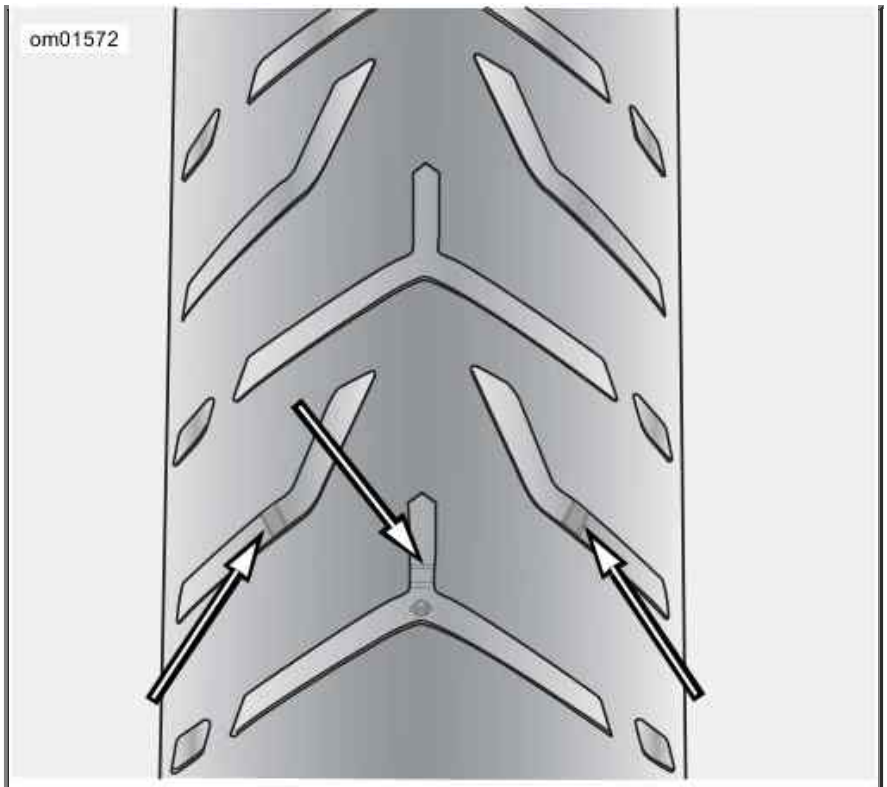

Wear Bar Appearance

Shock Absorbers

Inspect shock absorbers for leaks and rubber bushings for bushing deterioration at proper intervals.

Spark Plugs

⚠WARNING

Disconnecting spark plug cable with engine running can

result in electric shock and death or serious injury. (00464b)

⚠CAUTION

Do NOT pull on any electrical wires. Pulling on electrical wires may damage the internal conductor causing high resistance, which may result in minor or moderate injury. (00168a)

Check the spark plugs at proper intervals. Refer to Regular Service Intervals: 2013 Touring Models.

1. Disconnect spark plug cables from plugs by pulling up on the molded connector caps.
2. Check spark plug type. Only use those spark plugs specified for your model motorcycle.
3. Check spark plug gap against specifications table.

   NOTE:

   *If a torque wrench is not available, tighten **new** spark plugs finger-tight and then tighten an additional one-quarter turn with a spark plug wrench.*

4. Always tighten to the proper torque. Spark plugs must be tightened to the torque specified for proper heat transfer. Refer to Electrical.
5. Connect each molded connector cap until the cap snaps firmly into place over the spark plug.

Ignition

The engine in your motorcycle has been designed specifically to achieve optimum fuel economy within exhaust emission controls. Factory programmed ignition characteristics provide maximum engine performance and driveability.

Air Cleaner

⚠WARNING

Do not use gasoline or solvents to clean filter element. Flammable cleaning agents can cause an intake system fire, which could result in death or serious injury. (00101a)

⚠WARNING

Compressed air can pierce the skin and flying debris from compressed air could cause serious eye injury. Wear safety glasses when working with compressed air. Never use your hand to check for air leaks or to determine air flow rates. (00061a)

CAUTION

Install air filter before running engine. Failure to do so can draw debris into the engine and could result in engine damage. (00207a)

1. Refer to Regular Service Intervals: 2013 Touring Models. Remove air cleaner cover and inspect filter element at proper intervals. When operated under dusty conditions, inspect more often.

2. Wash the paper/wire mesh filter element in lukewarm water with a mild detergent. Do not strike filter element on a hard surface to dislodge dirt.
3. Allow filter element to either air dry or blow it dry, from the inside, with low pressure air. Do NOT use air cleaner filter oil on the Harley-Davidson paper/wire mesh air filter element.
4. Hold the filter element up to a strong light source. The element is sufficiently clean if light is uniformly visible through the media.
5. Replace the filter element if damaged or if filter media cannot be adequately cleaned.
6. Install baseplate gasket, air filter element and bracket if removed. Tighten bracket screws. Refer to Air Cleaner Fastener Torque.
7. Install air cleaner cover. Apply a drop of LOCTITE THREADLOCKER 243 (blue) to the threads of the cover screw and tighten. Refer to Air Cleaner Fastener Torque.

Air Cleaner Fastener Torque

FASTENER	TORQUE
Air filter element bracket screws	108-132 in-lbs (12.2-14.9 Nm)
Air filter cover screw	36-60 in-lbs (4.1-6.8 Nm)

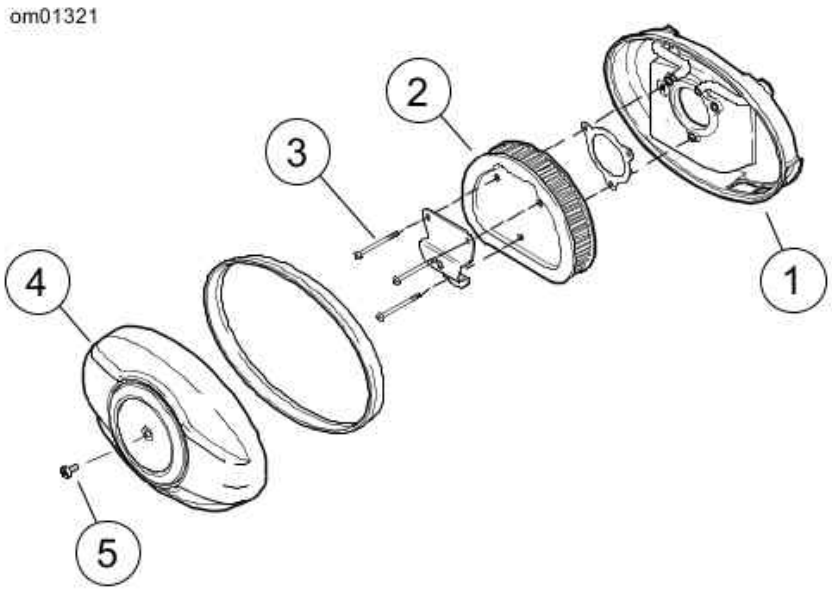

1. Backplate
2. Filter element
3. Screws
4. Cover
5. Cover screw

Air Cleaner: Twin Cam Models

Headlamp: Single Headlamp Models

Removal

1. Remove screw at bottom of headlamp door (chrome ring). Remove headlamp door.
2. See Headlamp Retaining Screws (typical). Remove screws securing headlamp assembly.
3. Disconnect headlamp connector.

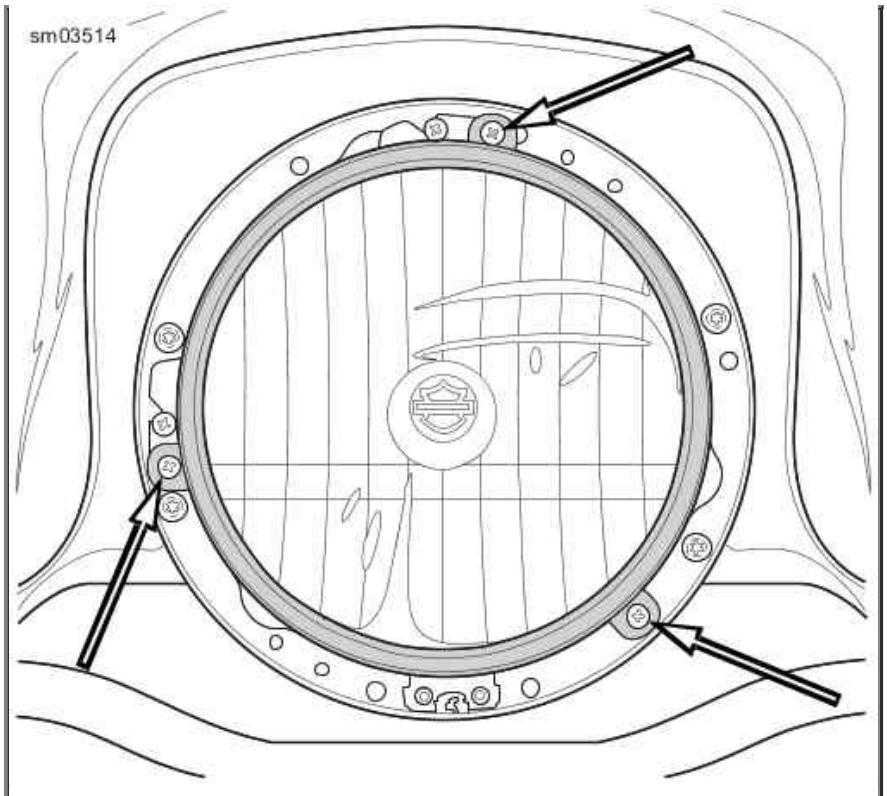

Headlamp Retaining Screws (typical)

Bulb Replacement

CAUTION

When replacement is required, use only the specified sealed beam unit or bulb, available from a Harley-Davidson dealer. An improper wattage sealed beam or bulb, can cause charging system problems. (00209a)

NOTE:

The quartz halogen bulb is very delicate and must be handled with care.

1. Remove headlamp assembly.
2. Remove rubber boot at back of housing.
3. See Wire Retaining Clip. Release wire retaining clip (1) from retainer (2).

   NOTE:

   Loosen retainer screw 1/2-1 turn to release wire retaining clip if necessary.

   ⚠WARNING

   Handle bulb carefully and wear eye protection. Bulb contains gas under pressure, which, if not handled carefully, could cause serious eye injury. (00062b)

4. Remove and discard bulb.

   CAUTION

   Never touch the quartz bulb. Fingerprints will etch the glass and decrease bulb life. Handle the bulb with paper or a clean, dry cloth. Failure to do so could result in bulb

damage. (00210b)

5. Install **new** bulb. Align the tab on the bulb with the notch in the headlamp housing.
6. See Wire Retaining Clip. Secure wire retaining clip (1) under lip of retainer (2).

   NOTE:

   If loosened to release wire retaining clip, hold retainer in place and tighten screw until snug. Verify that reflector cone is still centered under decorative logo.

7. Install rubber boot.
8. **HDI models:** Rotate position lamp bulb retainer 1/4 turn counterclockwise to remove. Replace bulb and install bulb retainer in lamp housing.

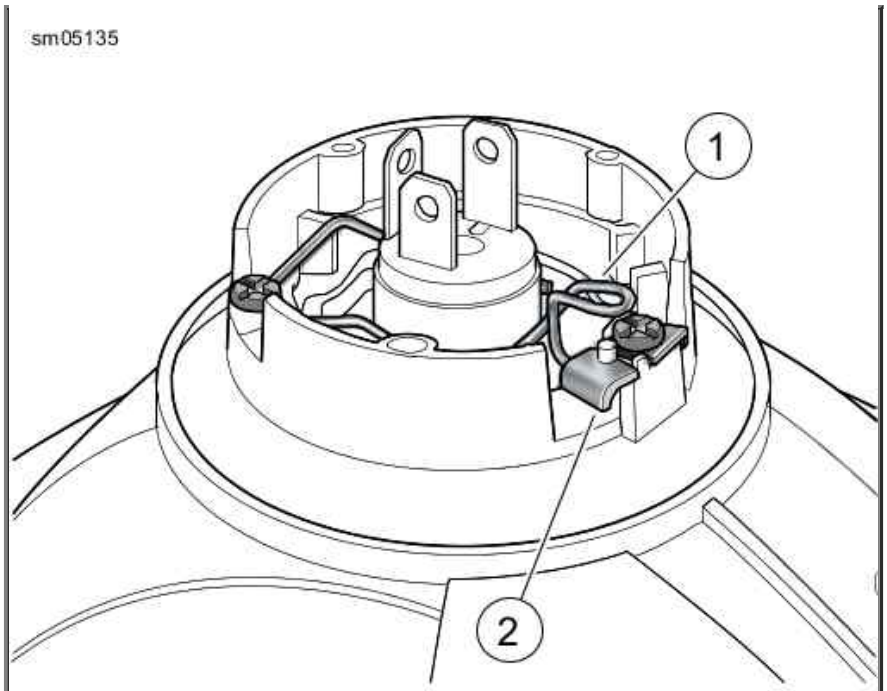

1. Wire retaining clip
2. Retainer

Wire Retaining Clip

Installation

1. Install headlamp connector.
2. Install headlamp assembly. Tighten to:
   a. **Non-fairing equipped:** 9-18 in-lbs (1.0-2.0 Nm).
   b. **Fairing equipped:** 22-32 in-lbs (2.5-3.6 Nm).
3. Secure the headlamp door (chrome ring) with screw. Tighten to 9-18 in-lbs (1.0-2.0 Nm).

Headlamp Bulb Replacement: Dual Headlamp Models

Removal

1. Carefully pry headlamp trim from front of motorcycle.
2. Remove four screws securing headlamp assembly to trim ring/adjuster assembly.

3. Disconnect headlamp harness from bulb and remove headlamp housing assembly.

Bulb Replacement

CAUTION

When replacement is required, use only the specified sealed beam unit or bulb, available from a Harley-Davidson dealer. An improper wattage sealed beam or bulb, can cause charging system problems. (00209a)

NOTE:

The headlamp uses a replaceable quartz halogen bulb which is very delicate and must be handled with care.

1. See Headlamp Housing Assembly. Remove rubber boot (1).
2. Rotate retainer (2) counterclockwise and remove.

⚠WARNING

Handle bulb carefully and wear eye protection. Bulb contains gas under pressure, which, if not handled carefully, could cause serious eye injury. (00062b)

3. Remove and discard bulb.

CAUTION

Never touch the quartz bulb. Fingerprints will etch the glass and decrease bulb life. Handle the bulb with paper or a clean, dry cloth. Failure to do so could result in bulb damage. (00210b)

4. See Headlamp Housing Assembly. Install **new** bulb in headlamp housing. Be sure tab (5) on bulb is aligned with slot (6) in bulb housing.
5. Install retainer (2) and rotate clockwise to secure.
6. Install rubber boot (1) over retainer until flush with base of bulb socket.
7. **HDI models:** Rotate position lamp bulb retainer 1/4 turn counterclockwise to remove. Replace bulb and install bulb retainer in lamp housing.

Installation

1. Install headlamp assembly with four screws. Tighten to 15-25 in-lbs (1.7-2.8 Nm).
2. Install headlamp trim.

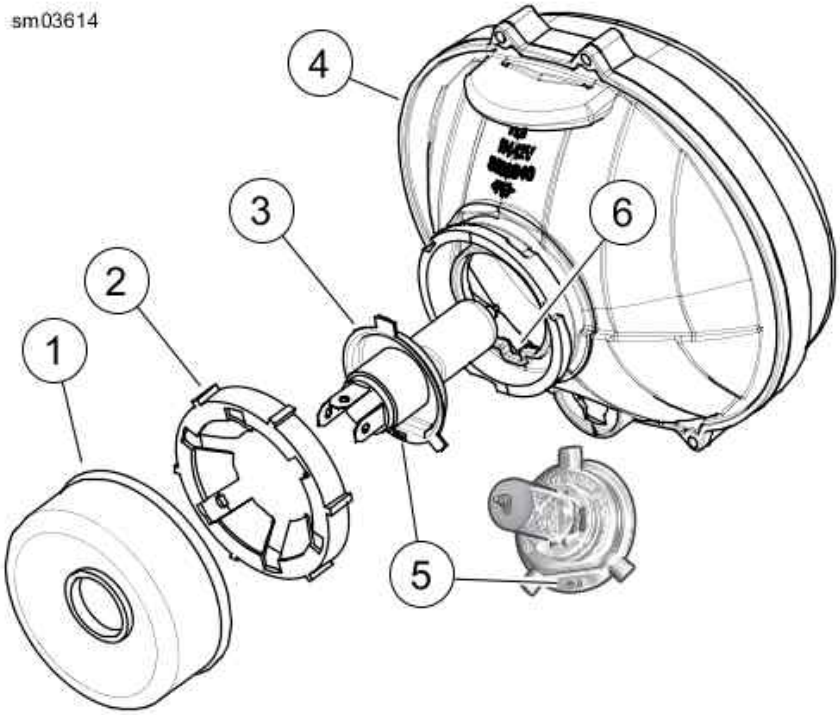

1. Rubber boot
2. Retainer
3. Bulb
4. Headlamp housing
5. Tab
6. Slot

Headlamp Housing Assembly

Headlamp Alignment

⚠WARNING

The automatic-on headlamp feature provides increased visibility of the rider to other motorists. Be sure headlamp is on at all times. Poor visibility of rider to other motorists can result in death or serious injury. (00030b)

NOTE:

Adjust the headlamps of motorcycles with multiple beam headlamps to converge into one pattern.

1. Check the tire pressure.
2. Adjust the rear shocks for the rider and intended load.
3. Fill fuel tank or add an equal amount of ballast.

   NOTE:

   Choose a wall in minimum light.

4. See Check Headlamp Alignment. Park the motorcycle in a line (1) perpendicular to the wall.
5. Position motorcycle so that front axle is 25 ft 7.6 m from wall.
6. Draw a vertical line (2) on the wall.
7. With the motorcycle loaded, point the front wheel straight forward at wall. Measure the distance (4) from the floor to the center of the high beam bulb.
8. Draw a horizontal line (5) through the vertical line on the wall. Place line 2.1 in 53.3 mm

lower than the measured bulb centerline.

NOTE:

The headlamp is aligned when the light beam hot spot is centered over the intersection of the lines.

9. Verify headlamp alignment. Adjust as necessary.

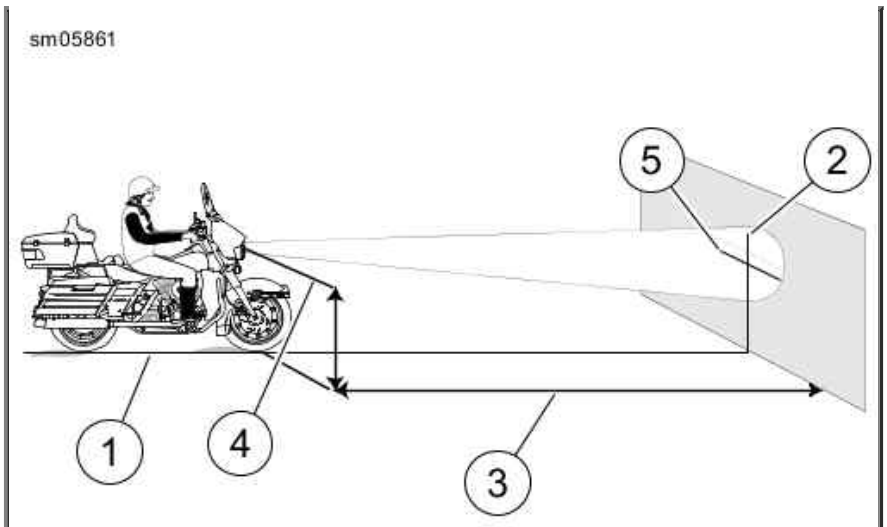

1. Perpendicular line
2. Vertical line
3. 25 ft (7.6 m)
4. High beam bulb centerline
5. Horizontal line 2.1 in (53.3 mm) lower than bulb centerline

Check Headlamp Alignment

Headlamp Adjustment: Single Headlamp Models

NOTE:

Do not remove trim ring for headlamp adjustment.

1. See Headlamp Adjusters (typical). Insert screwdriver through adjuster slots in trim ring.
   a. **Horizontal:** Turn the horizontal adjusting screw to adjust light beam left and right.
   b. **Vertical:** Turn the vertical adjusting screw to adjust light beam up and down.
2. Adjust the light beam until it is centered as shown in Check Headlamp Alignment.

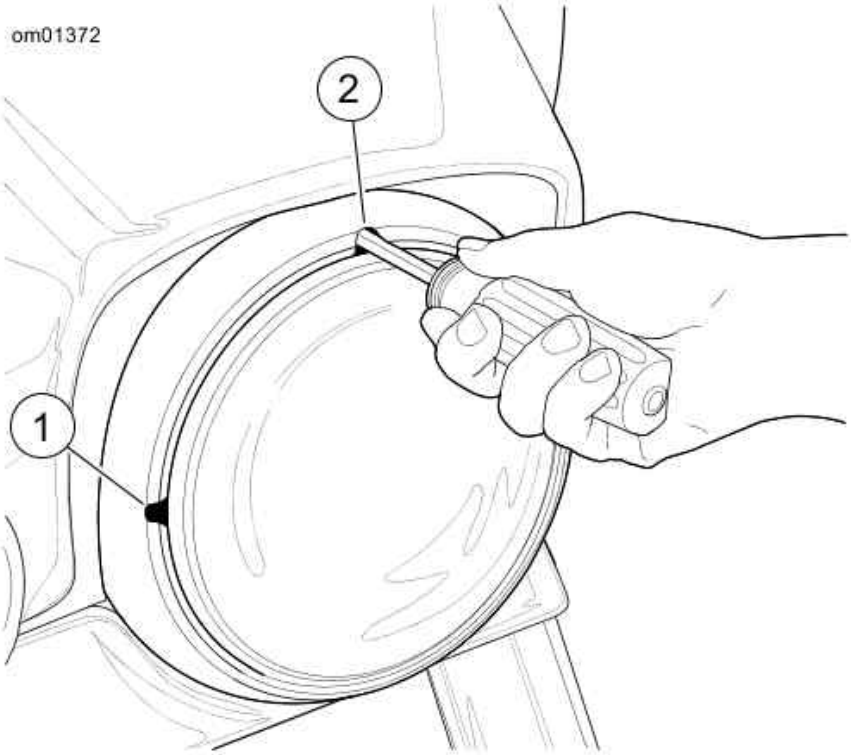

1. Horizontal adjuster
2. Vertical adjuster

Headlamp Adjusters (typical)

Headlamp Adjustment: Dual Headlamp Models

1. See Headlamp Adjusters: Dual Headlamp Models. Rotate the hex adjusters (metric) located near the bottom edge of the inner fairing. Refer to Hex Adjuster Rotation for adjuster rotation.
   a. **Horizontal:** Turn either the left or right adjuster to adjust the light beam left and right.
   b. **Vertical:** Turn both adjusters equally to adjust the light beam up and down.
2. Adjust the light beam until it is centered as shown in Check Headlamp Alignment.

Hex Adjuster Rotation

HEX ADJUSTER	ROTATION	BEAM MOVEMENT
Left only	clockwise	to the right
Right only	counterclockwise	
Left only	counterclockwise	to the left
Right only	clockwise	
Left and right equally	clockwise	upward
Left and right equally	counterclockwise	downward

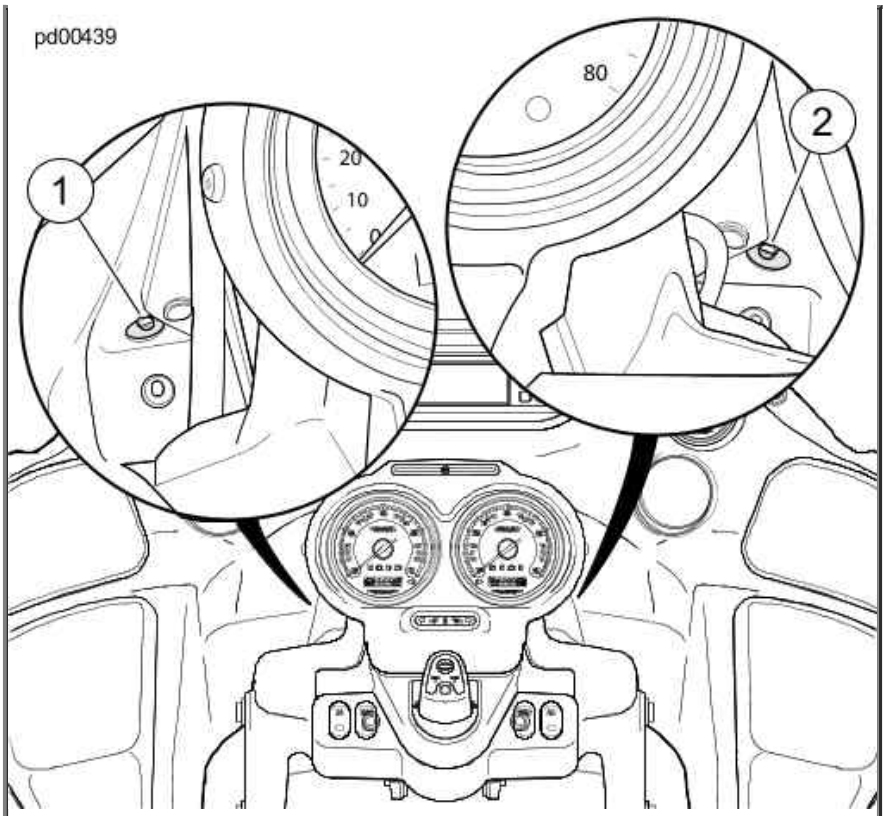

1. Left
2. Right

Headlamp Adjusters: Dual Headlamp Models

Auxiliary/Fog Lamps

For models equipped with auxiliary/fog lamps, see a Harley-Davidson dealer or service manual for bulb replacement or alignment.

Turn Signal Bulb Replacement: Bullet Style

1. See Lens Cap Notch. Insert a coin or the blade of a small screwdriver into the notch at the bottom of the lens cap. Carefully twist until the lens cap pops out of the lamp housing.
2. Push bulb in and rotate counterclockwise. Pull bulb from socket.
3. Inspect condition of electrical contacts in socket. If necessary, clean with a small wire brush and electrical contact cleaner.
4. Apply ELECTRICAL CONTACT LUBRICANT to contacts in socket and at bottom of **new** bulb.
5. Align pins on **new** bulb with pin guides in bulb socket. Push bulb in and turn clockwise to lock in place.
6. Snap lens cap onto the lamp housing with notch at bottom.

⚠WARNING

Be sure that all lights and switches operate properly before operating motorcycle. Low visibility of rider can result in death or serious injury. (00316a)

7. Test lamp operation.

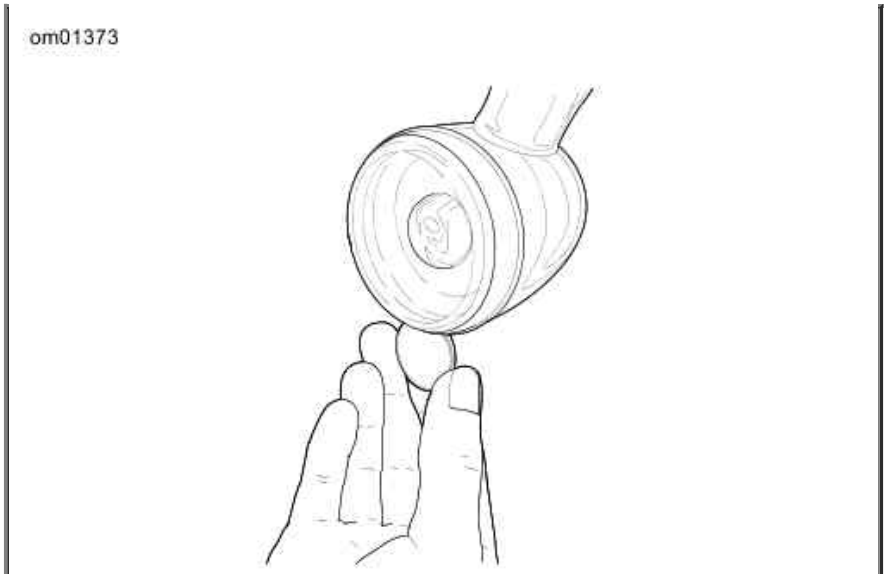

Lens Cap Notch

Turn Signal Bulb Replacement: Flat Lens Style

1. See Turn Signal Lamp Assembly: Flat Lens Style. Remove two screws to release lens from lamp housing.
2. Push bulb in and rotate counterclockwise to remove bulb from socket.
3. Inspect condition of electrical contacts in socket. If necessary, clean with a small wire brush and electrical contact cleaner.
4. Apply ELECTRICAL CONTACT LUBRICANT to contacts in socket and at bottom of **new** bulb.
5. Align index pins on **new** bulb with pin guides in bulb socket. Push bulb in and turn clockwise to lock in place.
6. Seat lens in lamp and install two screws.

⚠WARNING

Be sure that all lights and switches operate properly before operating motorcycle. Low visibility of rider can result in death or serious injury. (00316a)

7. Test lamp operation.

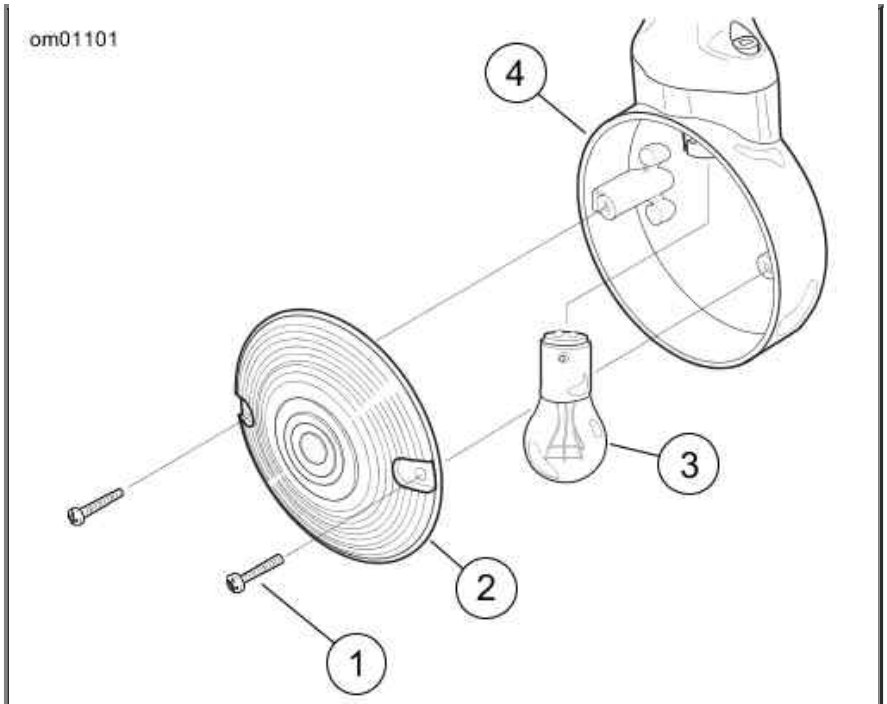

1. Screws (2)
2. Lens
3. Bulb
4. Lamp housing

Turn Signal Lamp Assembly: Flat Lens Style

Tail Lamp Bulb Replacement

Removal

1. Remove two screws to release tail lamp assembly from chrome base.
2. See Tail Lamp Assembly. Disconnect tail lamp connector (3).
3. Rotate bulb socket (4) 1/4 turn counterclockwise and remove from tail lamp assembly. Pull bulb from socket.

Installation

1. Coat base of **new** bulb with ELECTRICAL CONTACT LUBRICANT. Install **new** bulb in socket.
2. Insert socket (4) into tail lamp assembly and rotate 1/4 turn clockwise.
3. See Tail Lamp Assembly. Connect tail lamp connector (3).
4. Place tail lamp into position against chrome base.

   NOTE:

   Over-tightening screws can crack the lens.

5. Install two screws. Tighten to 20-24 in-lbs (2.3-2.7 Nm).

⚠WARNING

Be sure that all lights and switches operate properly before operating motorcycle. Low visibility of rider can

result in death or serious injury. (00316a)

6. Test tail lamp operation.

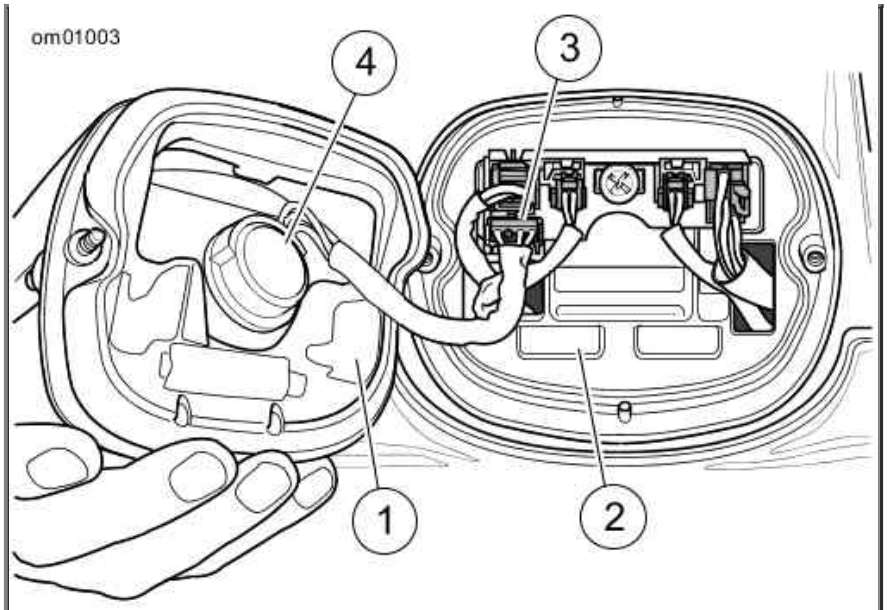

1. Lens
2. Base
3. 4-pin multilock connector
4. Bulb socket

Tail Lamp Assembly

Alternator/Voltage Regulator

Charging Rate

The alternator output is controlled and changed to direct current by the voltage regulator.

- The voltage regulator increases charging rate when battery is low or lamps are lit.
- The voltage regulator decreases charging rate when battery charge is up.

CAUTION

It is possible to overload your vehicle's charging system by adding too many electrical accessories. If the combined electrical accessories operating at any one time consume more electrical current than the vehicle's charging system can produce, the electrical consumption can discharge the battery and cause damage to the vehicle's electrical system. See an authorized Harley-Davidson dealer for advice about the amount of current consumed by additional electrical accessories or for necessary wiring changes. (00211c)

A battery voltage LED in the instruments will light up when voltage is either too low or too high.

NOTES:

- *This unit requires no interval attention. If any electrical system trouble is experienced that might be traceable to the alternator or voltage regulator, the motorcycle should be taken to a Harley-Davidson dealer who has the necessary electrical testing equipment to give the required attention.*
- *For model specific information regarding the voltage regulator, refer to the appropriate Service Manual or see a Harley-Davidson dealer.*

Type

Your motorcycle uses an Absorbed Glass Mat (AGM) battery. The AGM battery is permanently sealed, valve regulated, maintenance-free, lead/calcium and sulfuric acid battery. All batteries are shipped precharged and ready to be put into service. Do not attempt to open the battery for any reason.

Antidotes for Battery Acid

CONTACT	TREATMENT
External	Flush with water.
Internal	Drink large quantities of milk or water, followed by milk of magnesia, vegetable oil or beaten eggs. Get immediate medical attention.
Eyes	Flush with water. Get immediate medical attention.

⚠WARNING

Batteries contain sulfuric acid, which could cause severe burns to eyes and skin. Wear a protective face shield, rubberized gloves and protective clothing when working with batteries. KEEP BATTERIES AWAY FROM CHILDREN. (00063a)

⚠WARNING

Explosive hydrogen gas, which escapes during charging, could cause death or serious injury. Charge battery in a well-ventilated area. Keep open flames, electrical sparks and smoking materials away from battery at all times. KEEP BATTERIES AWAY FROM CHILDREN. (00065a)

⚠WARNING

Batteries, battery posts, terminals and related accessories contain lead and lead compounds, and other chemicals known to the State of California to cause cancer, and birth defects or other reproductive harm. Wash hands after handling. (00019e)

⚠WARNING

Never remove warning label attached to top of battery. Failure to read and understand all precautions contained in warning, could result in death or serious injury. (00064a)

1. Contents are corrosive
2. Wear safety glasses
3. Contents are explosive
4. Keep flames away
5. Read instructions
6. Keep away from children

Battery Warning Label

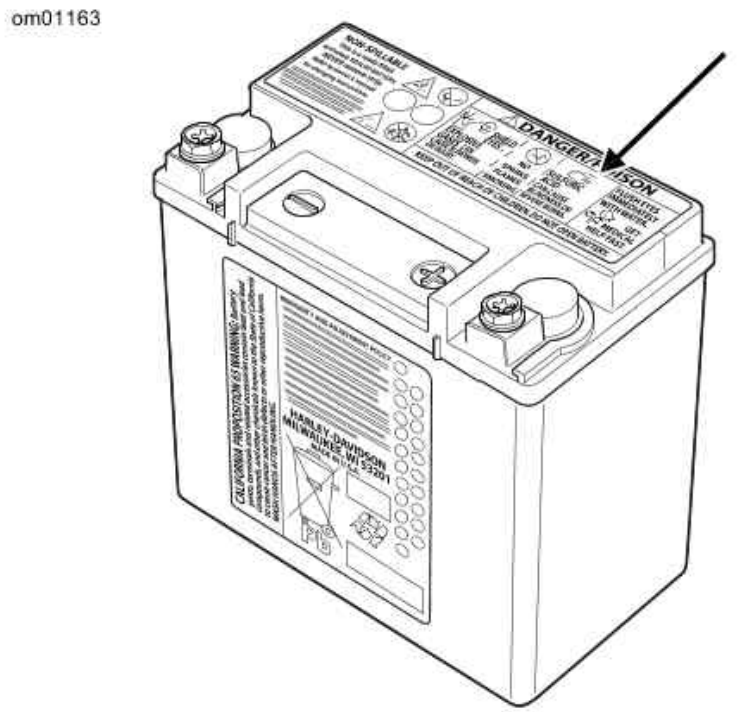

Battery Warning Label

Voltmeter Test

The voltmeter test provides a general indicator of battery condition. Check the voltage of the battery to verify that it is in a 100 percent fully-charged condition. If the open circuit (disconnected) voltage reading is below 12.7 V, charge the battery and then re-check the voltage after the battery has set for one to two hours. Refer to Voltmeter Test.

Voltmeter Test

READING IN VOLTS	PERCENT OF CHARGE
12.7	100
12.6	75
12.3	50
12.0	25
11.8	0

Cleaning and Inspection

Battery top must be clean and dry. Dirt and electrolyte on top of the battery can cause battery to self-discharge.

1. Clean battery top.
2. Clean cable connectors and battery terminals using a wire brush or fine grit sandpaper to remove any oxidation.
3. Inspect and clean the battery screws, clamps and cables. Check for breakage, loose connections and corrosion.
4. Check the battery posts for melting or damage caused by overtightening.
5. Inspect the battery for discoloration, a raised top or a warped or distorted case. This might indicate that the battery has been frozen, overheated or overcharged.
6. Inspect the battery case for cracks or leaks.

Charging

An automatic, constant monitoring battery charger/tender with a charging rate of 5 amps or less at less than 14.6 volts is recommended. The use of constant current chargers (including trickle chargers) to charge sealed AGM batteries is not recommended. Any overcharge will cause dry-out and premature battery failure. Never charge a battery without first reviewing the instructions for the charger being used. In addition to the manufacturer's instructions, follow these general safety precautions.

Charge the battery if any of the following conditions exist:

- Vehicle lamps appear dim.
- Electric starter sounds weak.
- Battery has not been used for an extended period of time.

⚠WARNING

Explosive hydrogen gas, which escapes during charging, could cause death or serious injury. Charge battery in a well-ventilated area. Keep open flames, electrical sparks and smoking materials away from battery at all times. KEEP BATTERIES AWAY FROM CHILDREN. (00065a)

⚠WARNING

Batteries contain sulfuric acid, which could cause severe burns to eyes and skin. Wear a protective face shield, rubberized gloves and protective clothing when working with batteries. KEEP BATTERIES AWAY FROM CHILDREN. (00063a)

1. Perform a voltmeter test to determine the state of charge. If battery needs to be charged, proceed to the next step.
2. Place the battery on a level surface.

⚠WARNING

Unplug or turn OFF battery charger before connecting charger cables to battery. Connecting cables with charger ON can cause a spark and battery explosion, which could result in death or serious injury. (00066a)

⚠WARNING

Connect positive (+) battery cable first. If positive (+) cable should contact ground with negative (-) cable connected, the resulting sparks can cause a battery explosion, which could result in death or serious injury. (00068a)

⚠WARNING

Disconnect negative (-) battery cable first. If positive (+) cable should contact ground with negative (-) cable connected, the resulting sparks can cause a battery explosion, which could result in death or serious injury. (00049a)

CAUTION

Do not reverse the charger connections described in the following steps or the charging system of the motorcycle could be damaged. (00214a)

NOTES:

- *Do not use chargers with excessively high voltage designed for flooded batteries or excessively high current designed for much larger batteries. Charging should be limited to no more than 5 amps at no more than 14.6 volts.*
- *Most automatic, constant monitoring battery chargers are completely automatic and can be left connected to both AC power and to the battery that is being charged. When leaving this type of charger connected for extended periods of time, periodically check the battery to see if it is unusually warm. This is an indication that the battery may have a weak cell or internal short. Read the manufacturers instructions for the charger being used.*

3. Connect the red battery charger lead to positive (+) terminal of the battery.

4. Connect the black battery charger lead to negative (-) terminal of the battery.

   NOTE:

   If the battery is still in the vehicle, connect the negative lead to the chassis ground. Make sure that the ignition and all electrical accessories are turned off.

5. Step away from the battery and turn on the charger.

⚠WARNING

Unplug or turn OFF battery charger before disconnecting charger cables from battery. Disconnecting clamps with charger ON can cause a spark and battery explosion, which could result in death or serious injury. (00067a)

6. After the battery is fully charged, turn OFF the charger and disconnect the black battery charger lead to the negative (-) terminal of the battery.

7. Disconnect the red battery charger lead to the positive (+) terminal of the battery.

8. Mark the charging date on the battery.

Storage

If the motorcycle will not be operated for several weeks, such as during the winter season, remove the battery from the motorcycle and fully charge.

If the motorcycle is to be stored with the battery installed, it will be necessary to connect a automatic, constant monitoring charger/tender to maintain charge. See an authorized dealer for more information.

A battery that is removed from the vehicle is affected by self-discharge. A battery that is stored in the vehicle is affected by both self-discharge and, more significantly, parasitic loads. Parasitic loads occur from things like diode leakage and maintaining computer memory with the vehicle off.

- Batteries self-discharge at a faster rate at higher ambient temperatures.
- To reduce the self-discharge rate, store battery in a cool, dry place.
- Charge the battery every two weeks if stored in the vehicle.
- Charge the battery once per month if stored out of the vehicle.

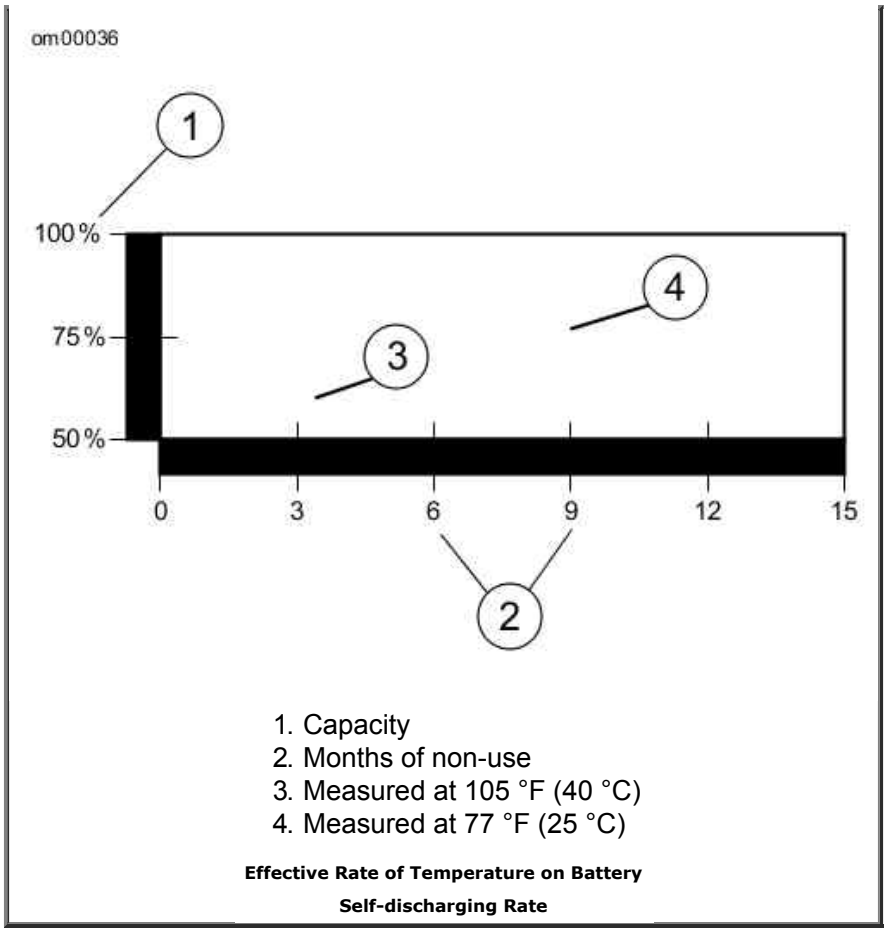

Battery

Disconnection and Removal

1. Remove seat.

2. See Top Caddy. If present, move purge solenoid (1) forward to release from top caddy. Release HFSM antenna (2) from top caddy and move out of the way.

3. Remove fasteners (4).

4. Cut cable straps (3). Move harnesses to allow more clearance for the top caddy.

5. See Move Top Caddy Aside. Release top caddy from front hold-down bracket and rotate top caddy (1) out of the way.

6. If equipped with security system siren, turn the ignition switch ON with the hands-free fob present to disarm the security system.

⚠WARNING

Disconnect negative (-) battery cable first. If positive (+) cable should contact ground with negative (-) cable connected, the resulting sparks can cause a battery explosion, which could result in death or serious injury. (00049a)

7. Disconnect the battery cables, negative cable first.

8. Grasp lifting strap (2) and pull up to raise battery. When battery is extracted far enough to get a good grip, grasp battery and remove the rest of the way.

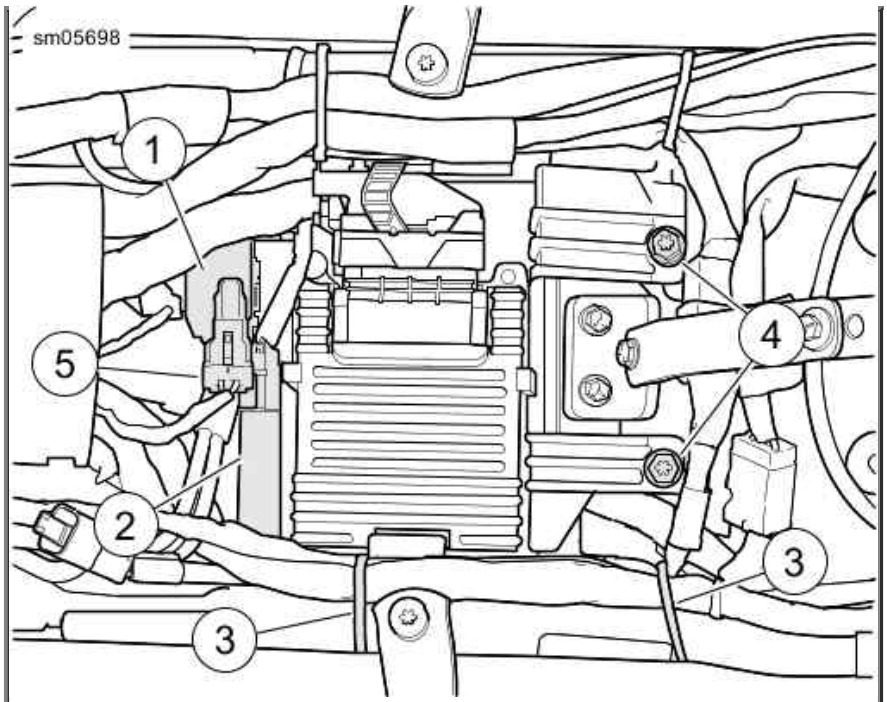

1. Purge solenoid
2. HFSM antenna
3. Cable straps
4. Fastener
5. Hold-down (not visible)

Top Caddy

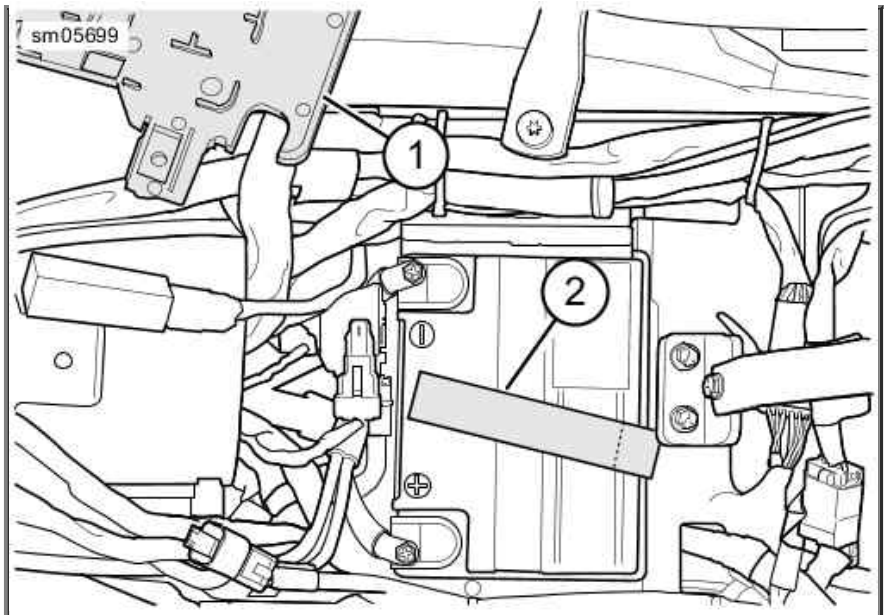

1. Top caddy
2. Lifting strap

Move Top Caddy Aside

Installation and Connection

1. Run lifting strap rearward across the bottom of the battery tray, then up and across the frame crossmember.
2. Place the battery into the battery tray, terminal side forward.

CAUTION

Connect the cables to the correct battery terminals. Failure to do so could result in damage to the motorcycle electrical system. (00215a)

⚠WARNING

Connect positive (+) battery cable first. If positive (+) cable should contact ground with negative (-) cable connected, the resulting sparks can cause a battery explosion, which could result in death or serious injury. (00068a)

CAUTION

Do not over-tighten bolts on battery terminals. Use recommended torque values. Over-tightening battery terminal bolts could result in damage to battery terminals. (00216a)

3. Turn the ignition switch to the OFF position.
4. Connect battery cables, positive cable first. Tighten to 60-70 in-lbs (6.8-7.9 Nm).

CAUTION

Keep battery clean and lightly coat terminals with petroleum jelly to prevent corrosion. Failure to do so could result in damage to battery terminals. (00217a)

5. Apply a light coat of petroleum jelly or ELECTRICAL CONTACT LUBRICANT to both battery terminals.
6. See Move Top Caddy Aside. Fold lifting strap (2) forward over top of battery.
7. See Top Caddy. Rotate top caddy into position above battery and engage latch on hold-down bracket.
8. If equipped, engage HFSM antenna (2) and purge solenoid (1) on top caddy. Verify all other connectors and harnesses are routed below the purge solenoid mounting tongue.
9. Fasten top caddy to frame crossmember with screws (4). Tighten to 72-96 in-lbs (8.1-10.9 Nm).
10. Secure harnesses to frame with cable straps (3).

⚠WARNING

After installing seat, pull upward on seat to be sure it is locked in position. While riding, a loose seat can shift causing loss of control, which could result in death or serious injury. (00070b)

11. Install seat.

Jump Starting

Jump starting a motorcycle is typically not recommended. However, there may be circumstances when it is necessary to do so. If a jump-start is necessary, use the following procedure.

⚠WARNING

Be sure jumper cables touch only appropriate battery terminals or ground. Allowing jumper cables to touch each other can result in sparks and a battery explosion, which could result in death or serious injury. (00072a)

⚠WARNING

Explosive hydrogen gas, which escapes during charging, could cause death or serious injury. Charge battery in a well-ventilated area. Keep open flames, electrical sparks and smoking materials away from battery at all times. KEEP BATTERIES AWAY FROM CHILDREN. (00065a)

CAUTION

Be sure both vehicles have the same battery voltage when jump starting. Connecting vehicles with different system voltages can result in vehicle damage. (00220c)

NOTES:

- *This procedure presumes the BOOSTER battery is in another vehicle. DO NOT jump start from a running booster vehicle. The high output charging systems on some vehicles can damage the electrical components on the motorcycle.*
- *Make sure the motorcycle and the BOOSTER vehicle are not touching one another.*

1. Turn off all unnecessary lamps and accessories.

Positive Cable

2. See Jump Start Cable Connections. Connect one end of a jumper cable to the DISCHARGED battery positive (+) terminal (1).
3. Connect the other end of the same cable to the BOOSTER battery positive (+) terminal (2).

Negative Cable

⚠WARNING

Do not connect negative (-) cable to or near the discharged battery negative (-) terminal. Doing so could cause a spark and explosion, which could result in death or serious injury. (00073a)

4. Connect one end of a jumper cable to the BOOSTER battery negative (-) terminal (3).

CAUTION

Do not connect the negative (-) cable to painted or chrome parts. Doing so could result in discoloration at the attachment point. (00221a)

5. Connect other end of the same cable (4) to a safe ground, (away from the DISCHARGED battery).
6. Start motorcycle.
7. Disconnect cables in reverse order of Steps 2, 3, 4, 5; that is: Steps 5, 4, 3, 2.

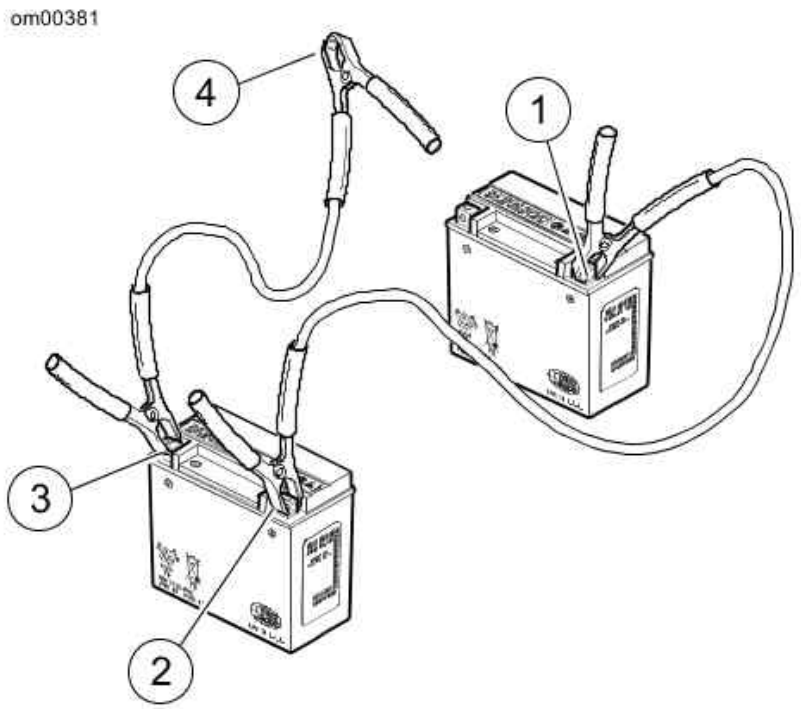

1. Discharged battery positive (+) terminal
2. Booster battery positive (+) terminal
3. Booster battery negative (-) terminal
4. Ground

Jump Start Cable Connections

Fuses and Relays

Main Fuse

See Fuse Block Area. A 40 amp main fuse (2) is located near the fuse block. Removing the main fuse will disconnect power to all systems except the starter motor/solenoid.

If equipped with security system siren, turn the ignition switch ON with the hands-free fob present to disarm the security system before removing the main fuse.

System Fuses

CAUTION

Do not skip any steps for fuse replacement. Skipping fuse replacement steps can result in damage to the sound system and/or other motorcycle systems. (00223a)

See Fuse Block Area. Fuses are located under left side cover.

If fuse replacement does not correct a problem, see a Harley-Davidson dealer for electrical diagnosis.

1. Place the ignition switch in the OFF position.

   NOTE:

   Removal of side cover requires no tools. Pull side cover to remove. To install, align barbed studs on side cover with grommets in frame and push.

2. Remove left side cover.

3. Press latch on bottom of fuse block cover (1) and swing bottom of the cover out. Remove the cover.

   NOTES:
   - *The fuse block cover has a fuse puller (3) attachment that may be used to remove fuses.*
   - *The fuse block cover label for fuse 4, Radio/siren power refers to the emergency siren installed on police models.*

4. See Fuses. Remove fuse and inspect the element.

   CAUTION

   Always use replacement fuses that are of the correct type and amperage rating. Use of incorrect fuses can result in damage to electrical systems. (00222a)

5. Replace the fuse if the element is burned or damaged.

   NOTE:

   Use automotive-type fuses for replacements. Two spare fuses can be found in the fuse block.

6. Install the fuse block cover.

7. Install left side cover.

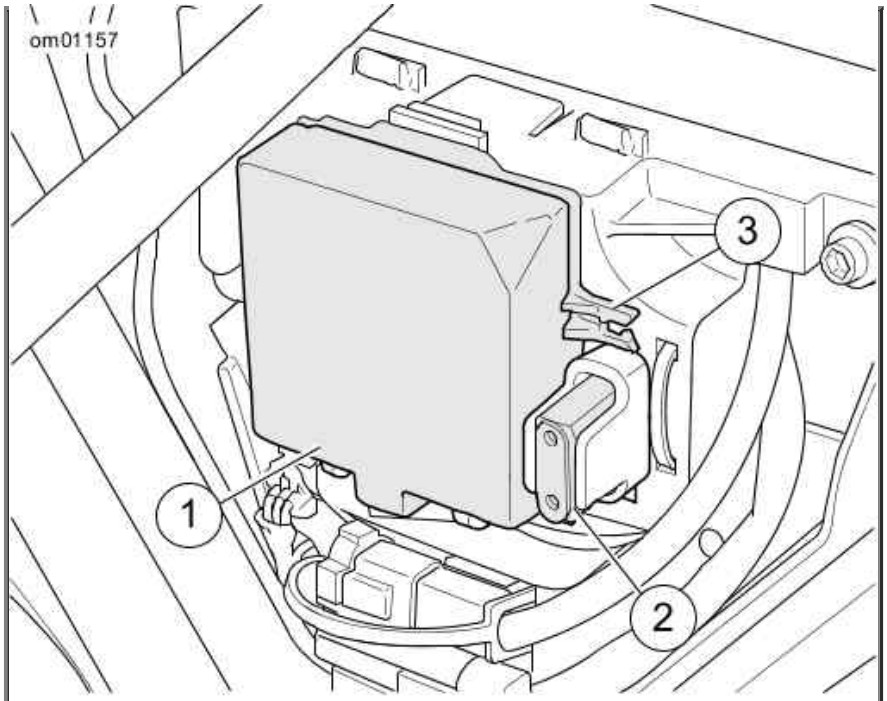

1. Fuse block cover
2. Main fuse
3. Fuse puller

Fuse Block Area

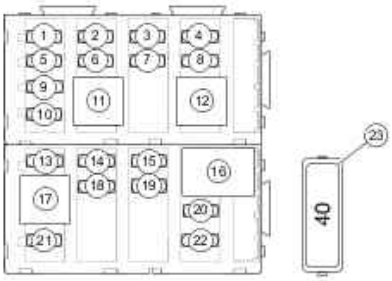

1. Brake (15 A)
2. Accessory (15 A)
3. P&A (15 A)
4. Radio/siren power (15 A)
5. Radio memory (15 A)
6. Battery (15 A)
7. ECM power (15 A)
8. Power outlet (15 A) (if equipped)
9. Exhaust control (15 A)
10. Fuel pump (15 A)
11. System relay
12. Start relay
13. P&A ignition (2 A max)
14. Instruments (15 A)
15. Ignition (15 A)
16. Lighting relay
17. Brake relay
18. Headlamp (15 A)
19. Lights (15 A)
20. Spare (15 A)
21. ABS (30 A)
22. Spare (30 A)
23. Main fuse (40 A)

Fuses

Seat

Removal

1. Open Tour-Pak (if equipped) to move passenger backrest out of the way. See Tour-Pak.

   NOTE:

   The Tour-Pak must be positioned to the rear to gain access to the seat mounting bracket screw. If the Tour-Pak is in the forward position, remove Tour-Pak and temporarily install in rearward position.

2. Remove the left side saddlebag.

CAUTION

Detach passenger seat strap before removing seat. Failure to do so can result in damage to rear fender paint. (00225a)

3. See Seat Strap Bracket Screw (typical). Remove fastener from seat strap bracket.
4. Pull upward on strap to free it from slot in bracket.
5. See Strap Slots: FLHRC. On FLHRC and FLTRU, carefully pull passenger seat strap through slots in the seat to remove.
6. Place seat strap on right side of vehicle.
7. To protect finish of Tour-Pak, cover rear seat mounting bracket with palm of hand.
8. See Seat Tongue. While pushing seat forward, raise rear of seat until bracket clears top of Tour-Pak (if equipped). Push seat rearward slightly to free tongue from slot in seat.
9. Remove seat from frame.

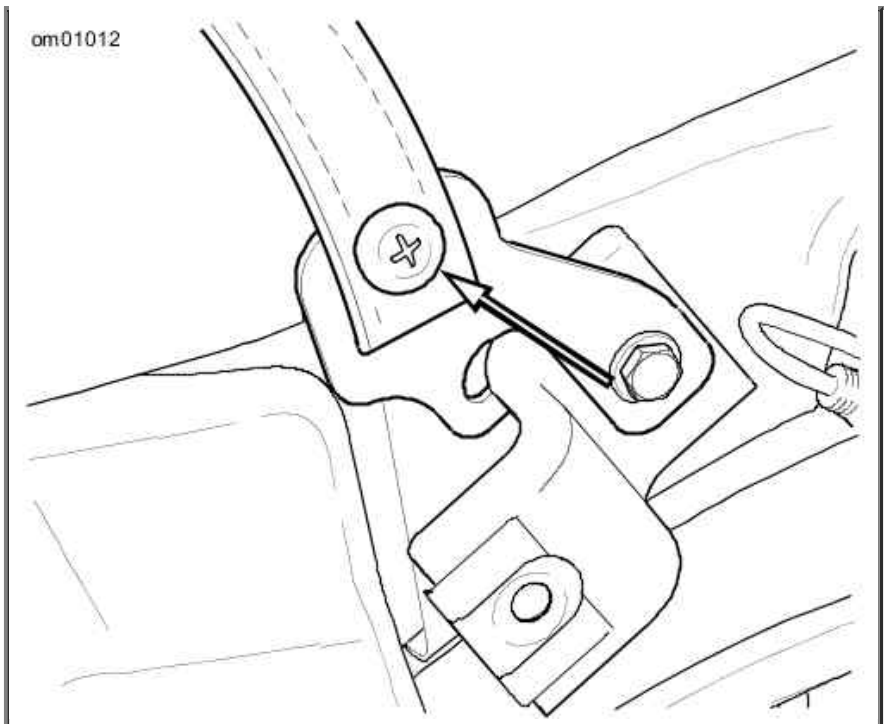

Seat Strap Bracket Screw (typical)

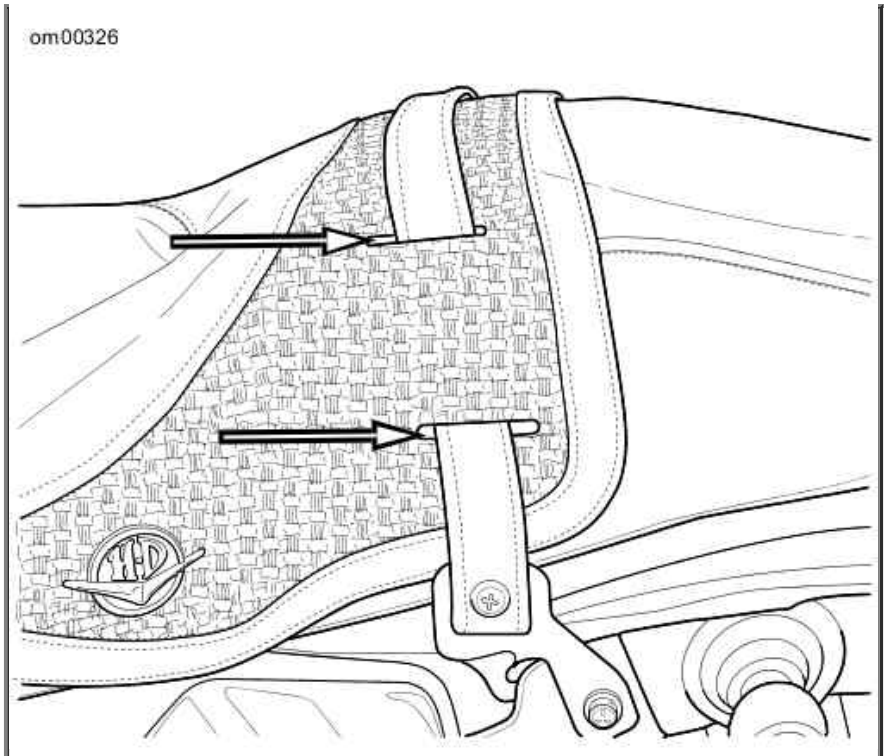

Strap Slots: FLHRC

Installation

1. See Seat Mounting Slot. Place seat on frame backbone.
2. To protect finish of Tour-Pak, cover rear seat mounting bracket with palm of hand.
3. See Seat Tongue. While raising rear of seat approximately 3 in 76.2 mm , use other hand to firmly push downward and rearward until tongue engages slot in seat.
4. Push seat forward. Align mounting bracket with seat retention nut on rear fender.
5. Install fastener to secure seat to rear fender. Tighten to 20-40 in-lbs (2.3-4.5 Nm).

   NOTE:

   If the seat retention nut is damaged or lost, see service manual for instructions.

6. See Strap Slots: FLHRC. On FLHRC and FLTRU, carefully route free end of passenger seat strap through slots in the seat.
7. See Seat Strap Bracket Screw (typical). Install end of seat strap in the bracket slot. Install seat strap bracket fastener. Tighten to 48-72 in-lbs (5.4-8.1 Nm).

   ⚠WARNING

   After installing seat, pull upward on seat to be sure it is locked in position. While riding, a loose seat can shift causing loss of control, which could result in death or serious injury. (00070b)

8. Pull up on seat to verify that it is properly secured.
9. Install saddlebag.
10. If moved, install Tour-Pak in its original location.

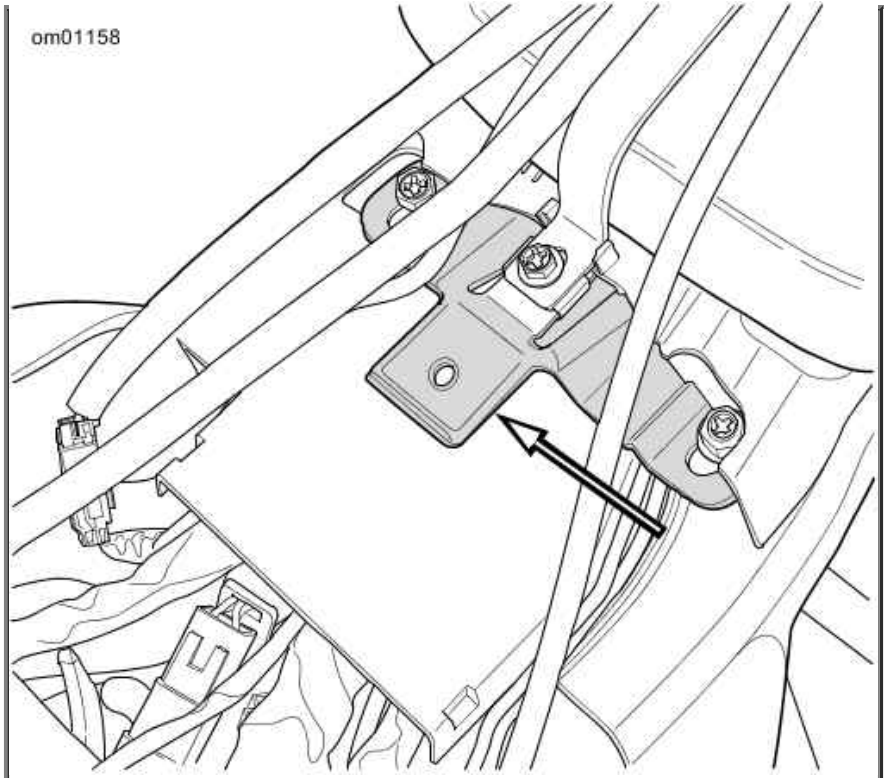

Seat Tongue

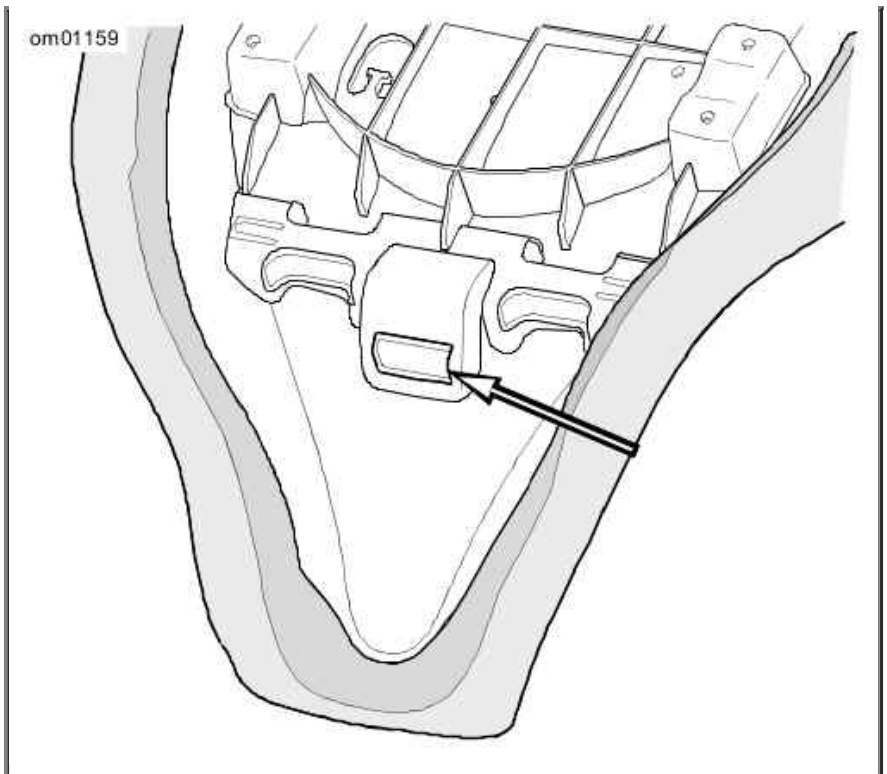

Seat Mounting Slot

Radio/CB Antenna

The antenna mast is threaded on a mount at the rear of the motorcycle. Unscrew the antennas if they must be removed. When installing, hand-tighten only.

Antennas for the radio and CB are different. For vehicles with a CB, always install the CB antenna (marked with the letters "CB" at the base of the mast) on the right side of the motorcycle. Installing the incorrect antenna for the radio or CB will result in degraded reception.

Motorcycle Storage

Placing Motorcycle in Storage

CAUTION

Proper storage is important for the trouble-free operation of your motorcycle. See your Owner's Manual for storage recommendations or see a Harley-Davidson dealer. Improper storage procedures can lead to equipment damage. (00046a)

If the motorcycle will not be operated for several months, such as during the winter season, there are several tasks which should be performed. These steps will protect parts against corrosion, preserve the battery and prevent the build-up of gum and varnish in the fuel system.

Store the motorcycle in a dry area with a stable temperature (if possible), away from any harsh chemicals or other substances such as fertilizers or salt.

⚠WARNING

Do not store motorcycle with gasoline in tank within the home or garage where open flames, pilot lights, sparks or electric motors are present. Gasoline is extremely flammable and highly explosive, which could result in death or serious injury. (00003a)

NOTE:

Make a list of everything you do and fasten it to a handgrip. When you take the motorcycle out of storage, this list will be your reference/checklist to get your motorcycle in operating condition.

1. Fill fuel tank and add a gasoline stabilizer. Use one of the commercially available gasoline stabilizers and follow the manufacturer's instructions.
2. Warm motorcycle to operating temperature. Change oil and turn engine over to circulate the new oil.
3. Check and adjust belt if necessary.
4. Check tire pressure. Refer to Specified Tires for specified pressure.
5. To protect the vehicle's body panels, engine, chassis and wheels from corrosion, follow the cosmetic care procedures described in the Care and Cleaning section of this owner's manual prior to storage.
6. Prepare battery for winter storage. See Battery.

⚠WARNING

Explosive hydrogen gas, which escapes during charging, could cause death or serious injury. Charge battery in a well-ventilated area. Keep open flames, electrical sparks and smoking materials away from battery at all times. KEEP BATTERIES AWAY FROM CHILDREN. (00065a)

NOTE:

- *If the motorcycle will be stored with the security system armed, connect a 750Ma SUPERSMART BATTERY TENDER 94654-98B to maintain battery charge.*
- *If the motorcycle will be stored with the security system disarmed, turn the motorcycle on while the hands-free fob is present. This will prevent the optional siren from sounding. Disconnect the negative battery cable and prepare battery for storage. See Battery.*

7. If motorcycle is to be covered, use a material such as light canvas that will breathe. Plastic materials that do not breathe promote the formation of condensation. Do not bend or tuck antennas under the cover. Either remove the antennas (if equipped) or allow them to protrude through the cover.

Removing Motorcycle From Storage

⚠WARNING

The clutch failing to disengage can cause loss of control, which could result in death or serious injury. Prior to starting after extended periods of storage, place transmission in gear and push vehicle back and forth several times to assure proper clutch disengagement. (00075a)

NOTE:

When lubricants have been contaminated by water, they often take on a milky white appearance. Always drain contaminated lubricants and refill with the appropriate Harley-Davidson lubricant prior to motorcycle operation.

1. See Battery for proper battery care. Charge and install the battery.
2. Start the engine and run until it reaches normal operating temperature. Turn off engine.
3. Check engine oil level.
4. Check the transmission lubricant level.
5. Check controls to be sure they are operating properly. Operate the front and rear brakes, throttle, clutch and shifter.
6. Check steering for smoothness by turning the handlebars through the full operating range.

⚠WARNING

Be sure tires are properly inflated, balanced, undamaged, and have adequate tread. Inspect your tires regularly and see a Harley-Davidson dealer for replacements. Riding with excessively worn, unbalanced, improperly inflated, overloaded or damaged tires can lead to tire failure and adversely affect stability and handling, which could result in death or serious injury. (00014b)

7. Check tire pressure. Refer to Specified Tires for specified pressure.
8. Check overall tire condition. See Tires.
9. Check all electrical equipment and switches including the stop lamp, turn signals and horn for proper operation.
10. Check for any fuel, oil or brake fluid leaks.

CAUTION

Turn engine over a few times to be sure there is no oil in the crankcase and that all oil has been pumped back into the oil tank. Stop engine and re-check oil level. Failure to do so can result in engine damage. (00071a)

Care and Cleaning

Cleaning and General Care

Clean and protect the cosmetic surfaces on your motorcycle as often as possible to inhibit rust and corrosion. After the motorcycle is cleaned, polish and seal the motorcycle to create a sacrificial barrier of protection against the weather and harsh substances.

Refer to Recommended Cleaning and Care Products and Recommended Surface Care Products. Harley-Davidson cleaning products are tested extensively for use on vehicle surfaces and are formulated to be compatible with one another. See a Harley-Davidson dealer to purchase recommended cleaning products.

NOTES:

- *Use recommended surface care products. Do not use paper towels, terry cloths, cloth diapers or other materials with nylon fibers which can create fine scratches to surfaces.*
- *Some painted finishes and other surfaces may be scratched if gravel, dirt or grime are scraped across the surface during washing. Use clean towels and avoid rubbing sediments across gloss finishes.*
- *For repair of scratched surfaces, see a Harley-Davidson dealer.*

⚠WARNING

Observe warnings on labels of cleaning compounds. Failure to follow warnings could result in death or serious injury. (00076a)

⚠WARNING

Do not wash brake discs with cleaners containing chlorine or silicone. Cleaners containing chlorine and silicone can impair brake function, which could result in death or serious injury. (00077a)

CAUTION

Do not use a pressure washer to clean motorcycle. Using a pressure washer can result in equipment damage. (00489c)

CAUTION

Use of abrasive products or powered buffing equipment will cause permanent cosmetic damage to body panels. Use only recommended products and techniques outlined in this manual to avoid damaging body panels. (00245b)

Recommended Cleaning and Care Products

PRODUCT	PART NUMBER	PURPOSE	FRAME	BODY PANELS	WHEELS	DENIM FINISH	OTHER
Sunwash® Bike Soap	93600023 (U.S. Market) 93600077 (Non-U.S. Market)	Thorough washing of all surfaces with a wash mitt. Reduces hard water spots when washing a motorcycle in the sun.	Yes	Yes	Yes	Yes	

Quick Wash	93600011 (16 oz) 93600012 (32 oz) (U.S. Market) 93600071 (16 oz) (Non-U.S. Market)	A quick wash for a lightly soiled motorcycle. Cleans all surfaces, sheeting action prevents spots.	Yes	Yes	Yes	Yes	
Bug Remover	93600022 (U.S. Market) 93600075 (Non-U.S. Market)	Removes bugs from metal, plastic or painted surfaces. Also available as individual wipes (93600065).	Yes	Yes	Yes	Yes	
Glaze Poly Sealant	93600026 (U.S. Market) 93600079 (Non-U.S. Market)	Polishes windshields, painted surfaces and chrome.	Yes	Yes	As applicable	No	
Gloss Detailer	93600062 (U.S. Market) 93600073 (Non-U.S. Market)	Produces high gloss with UV protection. Allows chrome to breathe, unlike wax. Good for windshields. Also available as individual wipes (93600066).	Yes	Yes	Yes	No	
Spray Cleaner & Polish	93600029 (U.S. Market) 93600084 (Non-U.S. Market)	Aerosol quick cleaner and detailer. Reduces static attraction to dust. Works great for removing bugs.	Yes	Yes	Yes	No	
Wheel & Tire Cleaner	93600024 (U.S. Market) 93600076 (Non-U.S.	Cleans wheels, tires, whitewalls and black-coated exhaust pipes and mufflers. Do not use on	No	No	Yes	No	

	Market)	frames or anodized parts.					
Chrome Clean & Shine	93600031 (U.S. Market) 93600082 (Non-U.S. Market)	Shines chrome-plated surfaces and cleans brushed aluminum or stainless steel surfaces.	As applicable				
Bare Metal Polish	93600028 (U.S. Market) 93600083 (Non-U.S. Market)	Polishes non-clear coated polished aluminum or polished stainless steel surfaces.	As applicable				
Scratch & Swirl Repair	93600025 (U.S. Market) 93600074 (Non-U.S. Market)	Removes fine scratches and swirls.	Yes	Yes	No	No	
Denim Paint Cleaner	93600064 (U.S. Market) 93600078 (Non-U.S. Market)	Waterless quick cleaner and detailer.	Yes	Yes	Yes	Yes	
Windshield Cleaner Individual Wipes	97406-10	Quick windshield cleaner in convenient single use wipe.	Yes	Yes	No	No	Windshield
H-D Black Tire Sidewall Protectant	94628-05	Restores luster to black tire sidewalls.	No	No	No	No	Tires
Harley Preserve Bare Aluminum Corrosion Protectant	99845-07	Corrosion control for bare aluminum surfaces. Also available as individual wipes (93600063).	As applicable				
Windshield Water Repellent	93600032 (Global)	Allows water to bead and dissipate from the windshield.	No	No	No	No	Windshield
Leather Protectant	93600034 (U.S.	Weatherproofs and preserves	No	No	No	No	Leather goods

	Market) 93600080 (Non-U.S. Market)	leather products.					
Black Leather Rejuvenator	93600033 (U.S. Market) 93600081 (Non-U.S. Market)	Rejuvenates black leather products so they look brand new.	No	No	No	No	Black leather goods
Engine Brightener	93600002 (U.S. Market) 93600068 (Non-U.S. Market)	Rejuvenates wrinkle black engine finish.	No	No	No	No	Wrinkle black engines
Boot Mark Remover	93600001 (U.S. Market) 93600069 (Non-U.S. Market)	Removes boot marks from chrome exhaust components.	No	No	No	No	Exhaust system
Travel Care Kit	93600007	Travel size cleaning and care products.	Yes	Yes	Yes	Yes	
Seat, Saddlebag & Trim Cleaner	93600010 (U.S. Market) 93600070 (Non-U.S. Market)	Cleans and conditions vinyl, leather and plastic. Use on seats, saddlebags, inner fairings, and any other trim.	No	No	No	No	Seats, saddlebags and trim
NOVUS 1 Cleaner/Protectant	99837-94T	Cleans windshields, tail lamps and all plastics. Resists fingerprints, fogging, smears and repels dust.	No	No	No	No	Windshield
NOVUS 2 Scratch Remover	99836-94T	Minor scratch remover for windshields and plastics. Apply after NOVUS 1.	No	No	No	No	Windshield

Recommended Surface Care Products

PRODUCT	PART NO.	DESCRIPTION
Wash Mitt	94760-99	Absorbent wool-blended washing mitten.
Soft Detailing Pad	94790-01	Soft pad for removing bugs and debris without scratching the surface finish.
Softstrips	94680-99	For cylindrical surfaces such as handlebars, forks, pushrod covers and spokes.
Softcloth	94656-98	Non-absorbent cloth for applying and buffing Swirl & Scratch treatment and Harley Glaze to painted surfaces or chrome.
Soft Drying Towel	94791-01	Extra-absorbent, non-streaking synthetic towel for drying. Dampen towel and wring out before using for greatest absorbency.
Harley-Davidson Hog Blaster Motorcycle Dryer	94651-09	Blows a stream of warm dry filtered air. Reduces streaks and water spots.
Wheel & Spoke Brush	43078-99	Cone-shaped scrub brush for wheels.
Microfiber Detailing Cloth	94663-02	Highly absorbent detailing cloth for polishing and sealing. Contains no nylon fibers.
Detailing Swabs	93600107	Large cotton swabs for cleaning crevices and detailed surfaces.
Cleaning Brush Kit	94844-10	Brush kit for detailing your motorcycle.
H-D Bike Wash Bucket and Apron	94811-10	Wash bucket with apron to hold your supplies. Includes grit guard.

Washing the Motorcycle

Use only recommended cleaning and care products. Refer to Recommended Cleaning and Care Products and Recommended Surface Care Products.

NOTE:

During rinsing and washing, avoid direct spray on radio, speakers, saddlebags, trunk or Tour-Pak sealing areas (if equipped). Avoid spraying water under leather saddlebag covers (if equipped).

Preparation

1. Allow motorcycle to cool before rinsing or washing. Spraying water on hot surfaces can leave water spots and mineral deposits.
2. Rinse the motorcycle from the bottom up.
3. To loosen dried bugs or hardened dirt, allow surfaces to soak under a damp towel.

Cleaning the Wheels and Tires

1. Rinse wheel and tire surfaces. Avoid splashing brake dust on chrome or painted parts.
2. Apply WHEEL & TIRE CLEANER. Allow cleaner to set for one minute.
3. Clean the wheel with a SOFT DETAILING PAD or WHEEL & SPOKE BRUSH. Use SOFTSTRIPS to clean wheel spokes. Thoroughly scrub all brake dust and other sediments off the wheel. Accumulated brake dust can trap moisture and dirt, which leads to wheel corrosion.
4. Rinse well.

Washing the Motorcycle

NOTE:

Refer to the appropriate instructions in this section for cleaning leather, Denim (flat) finishes, windshields or other special surfaces.

1. Fill a bucket with clean water.
2. Fill an H-D WASH BUCKET with water and add SUNWASH BIKE SOAP, following the directions on the package.
3. Soak the H-D WASH MITT in the SUNWASH solution. Wash all surfaces from the top working down.
4. Spray BUG REMOVER to remove any bugs.
5. Rinse the motorcycle:
    a. Rinse from the bottom up.
    b. Rinse from the top down.

Drying the Motorcycle

1. Dry the surfaces from the top down using a SOFT DRYING TOWEL or a HARLEY-DAVIDSON HOG BLASTER MOTORCYCLE DRYER. Avoid using any type of forced air on speakers or other sensitive components.
2. Dampen towel in clean water and wring out the excess. The towel is more absorbent when wet.
3. Wipe across the vehicle surface.
4. Repeat as necessary until surface is completely dry.

Polishing and Sealing

NOTE:

If motorcycle has Denim finish, skip the Polishing and Sealing procedure.

1. Apply GLAZE POLY SEALANT with a SOFTCLOTH or MICROFIBER DETAILING CLOTH, following the instructions on the package.
2. Buff with a SOFTCLOTH.
3. Polish and seal the wheels as described in Wheel Care to prevent corrosion.

NOTE:

Bare aluminum wheels do not have a protective coating. The wheels corrode if not properly treated. Apply HARLEY PRESERVE BARE ALUMINUM CORROSION PROTECTANT when purchasing the motorcycle and at least twice per year to prevent cosmetic damage to bare aluminum wheels.

Finishing Tires

Apply H-D BLACK TIRE SIDEWALL PROTECTANT to tires, following the instructions on the package.

Denim Finish Care

Some motorcycles have a Denim (flat or matte) finish. The Denim finish has qualities which differ from high gloss finishes on all other Harley-Davidson motorcycles. Like denim fabric, Denim paint will burnish or mar with age and use, thus adding character and personality to the finish of the motorcycle. Refer to Recommended Cleaning and Care Products for recommended products.

- If scratched, the color coat of paint does nick/scuff and these marks cannot be rubbed out.
- If polished, the finish will become less matte and more glossy over time.

How to Clean

For light deposits: Use DENIM PAINT CLEANER and a SOFTCLOTH. This helps remove finger prints and light soil.

For heavier deposits: Use either SUNWASH BIKE SOAP and a clean H-D WASH MITT or QUICK WASH. Rinse thoroughly with clean water.

Leather and Vinyl Care

CAUTION

Do not use bleach or detergents containing bleach on saddlebags, seats, tank panels or painted surfaces. Doing so can result in equipment damage. (00229a)

- Do not use ordinary soap to clean leather or fur. It could dry or remove the oils from the leather.

Leather, vinyl and other synthetic surfaces must be periodically cleaned and treated to maintain its appearance and extend its life. Clean and treat these surfaces once a season or more frequently under adverse conditions.

These surfaces are not designed for long-term exposure to inclement weather and should be protected with a Harley-Davidson Seat Rain Cover or Motorcycle Storage Cover (sold separately).

1. Vacuum or blow dust off surface.
2. Thoroughly clean surfaces with SEAT, SADDLEBAG & TRIM CLEANER, following directions on the bottle.
3. Allow the material to dry naturally and completely at room temperature before applying other products to the material. Do not use artificial means to dry the material quickly.
4. For leather only, rejuvenate faded black surfaces with BLACK LEATHER REJUVENATOR, and apply LEATHER PROTECTANT to weatherproof and preserve the leather.

NOTE:

Many Harley-Davidson accessories and seats are made of either treated or untreated leather or have leather inserts. Natural materials age differently and require different care than man-made materials. Seat covers and panels made of leather will gain "character", such as wrinkles, with age. Leather is porous and organic and each leather product will settle into its own distinct form with use. Your leather product will mature into its own custom shape and style from the sun, rain and time. This maturing is natural and will enhance the custom quality of your Harley-Davidson motorcycle.

Wheel Care

Wheels can corrode or be cosmetically damaged if they are not properly cleaned, polished and preserved. Cleaning and sealing wheels with the proper treatment will guard against pitting, corrosion, spots and stains. Harley-Davidson recommends that wheels be cared for weekly. Corrosion to wheels is not considered to be a defect in materials or workmanship.

NOTE:

Bare aluminum wheels do not have a protective coating and will corrode if not properly treated. Apply HARLEY PRESERVE BARE ALUMINUM CORROSION PROTECTANT when purchasing the motorcycle and at least twice per year to prevent cosmetic damage to bare aluminum wheels.

Keep wheels clean from harsh chemicals, acid based wheel cleaners, salt, and accumulated brake dust. After washing wheels with WHEEL & TIRE CLEANER, use the polish and sealing products in Wheel Polish and Sealing Products according to the type of wheels on your motorcycle.

Wheel Polish and Sealing Products

WHEELS	PRODUCT	DESCRIPTION
Bare aluminum	HARLEY PRESERVE™ BARE ALUMINUM CORROSION PROTECTANT	Creates a protective coating for bare aluminum wheels to prevent oxidation.
Polished aluminum or stainless steel	BARE METAL POLISH	Microabrasive polish to refurbish polished wheels. Do not use on chrome.
	GLOSS DETAILER	Seals and protects against harsh chemicals, salt, and other sediments to prevent oxidation.
Anodized (thick painted surfaces)	GLAZE POLY SEALANT	Cleans surface, removes fine scratches, and provides a breathable sealant against acid, chemicals, salt, and brake dust.
Chrome	CHROME CLEAN & SHINE	Non-abrasive cleaner to brighten chrome wheels.
	GLOSS DETAILER	Seals and protects against harsh chemicals, salt, and other sediments to prevent oxidation.

Whitewall Tires

Use HARLEY-DAVIDSON WHEEL & TIRE CLEANER to clean whitewall tires following directions on the bottle.

Windshield Care

CAUTION

Polycarbonate windscreens/windshields require proper attention and care to maintain. Failure to maintain polycarbonate properly can result in damage to the windscreen/windshield. (00483d)

CAUTION

Use only Harley-Davidson recommended products on Harley-Davidson windshields. Do not use harsh chemicals or rain sheeting products, which can cause windshield surface damage, such as dulling or hazing. (00231c)

- Powdered, abrasive or alkaline cleanser will damage the windscreen/windshield. Ammonia-based window cleaners cause permanent yellow effects to windshields.
- Do not use gas station windshield cleaner as it may damage the finish.
- Do not clean in hot sun or high temperature.

Windshields require special care. Harley-Davidson recommends using WINDSHIELD CLEANER to clean your windshield. Refer to Recommended Cleaning and Care Products for recommended cleaning products.

NOTES:

- *Use NOVUS 2 SCRATCH REMOVER to remove minor scratches.*
- *To treat the windshield with water repellent use WINDSHIELD WATER REPELLENT.*
- *Covering the windshield with a clean, wet cloth for approximately 15-20 minutes before washing will make dried bug removal easier.*

1. Use mild soap and warm water to wash the windshield.
2. Wipe dry with a clean SOFT DRYING TOWEL.

NOTE:

To minimize swirl marks, cleaning should be done when motorcycle is cool and parked in the shade. Faint swirl marks are normal and may be more visible on tinted windshields.

Troubleshooting

Troubleshooting: General

⚠WARNING

The troubleshooting section of the Owner's Manual is a guide to diagnose problems. Read the service manual before performing any work. Improper repair and/or maintenance could result in death or serious injury. (00080a)

The following checklist of possible operating troubles and their probable causes will be helpful in keeping your motorcycle in good operating condition. More than one of these conditions may be causing trouble and should be carefully checked.

Engine

Starter Does Not Operate or Does Not Turn Engine Over

1. Engine OFF/RUN switch in OFF position.
2. Ignition switch not ON.
3. Discharged battery or loose or corroded connections (solenoid chatters).
4. Clutch lever not squeezed against handlebar or transmission not in neutral.
5. Jiffy stand not in retracted position (for models equipped with jiffy stand interlock).
6. Blown fuse.

Engine Turns Over But Does Not Start

1. Fuel tank empty.
2. Fuel filter clogged.
3. Discharged battery or loose or damaged battery terminal connections.
4. Fouled spark plugs.
5. Spark plug cable connections loose or in bad condition and shorting.
6. Loose or corroded wire or cable connection(s) at coil or battery.
7. Fuel pump inoperative.

8. Blown fuse.

Starts Hard

1. Spark plugs in bad condition, have improper gap, or are partially fouled.
2. Spark plug cables in bad condition and leaking.
3. Battery nearly discharged.
4. Loose wire or cable connection(s) at one of the battery terminals or at coil.
5. Engine oil too heavy (winter operation).
6. Fuel tank vent plugged or fuel line closed off, restricting fuel flow.
7. Water or dirt in fuel system or filter.
8. Fuel pump inoperative.

Starts But Runs Irregularly or Misses

1. Spark plugs in bad condition or partially fouled.
2. Spark plug cables in bad condition and leaking.
3. Spark plug gap too close or too wide.
4. Battery nearly discharged.
5. Damaged wire or loose connection at battery terminals or coils.
6. Intermittent short circuit due to damaged wire insulation.
7. Water or dirt in fuel system or filter.
8. Fuel vent system plugged. See dealer.
9. One or more injectors fouled.

A Spark Plug Fouls Repeatedly

1. Fuel mixture too rich.
2. Incorrect spark plug.

Pre-ignition or Detonation (Knocks or Pings)

1. Incorrect fuel.
2. Incorrect spark plug for kind of service.

Overheats

1. Insufficient oil supply or oil not circulating.
2. Heavy carbon deposit from lugging engine. See dealer.
3. Insufficient air flow over cylinder heads during extended periods of idling or parade duty.

Excessive Vibration

1. Rear fork pivot shaft nuts loose. See dealer.
2. Front engine mounting bolts loose. See dealer.
3. Front chain or links tight as a result of insufficient lubrication or belt badly worn.
4. Engine to transmission mounting bolts loose (applicable models). See dealer.
5. Damaged frame. See dealer.
6. Wheels and/or tires damaged. See dealer.
7. Vehicle not properly aligned. See dealer.

Engine Oil Not Circulating (Oil Pressure Lamp Lit)

1. Insufficient or diluted oil supply.
2. Oil feed clogged with ice and sludge in freezing weather.
3. Grounded oil signal switch wire or faulty signal switch. See dealer.
4. Damaged or improperly installed check valve. See dealer.
5. Oil pump problem. See dealer.

Electrical System

Alternator Does Not Charge

1. Regulator not grounded. See dealer.
2. Engine ground wire loose or damaged. See dealer.
3. Loose or damaged wires in charging circuit. See dealer.

Alternator Charge Rate is Below Normal

1. Weak battery.
2. Excessive use of add-on accessories.
3. Loose or corroded connections.
4. Extensive periods of idling or low speed riding.

Transmission

Transmission Shifts Hard

1. Bent shifter rod. See dealer.

Transmission Jumps Out of Gear

1. Worn shifter dogs in transmission. See dealer.

Clutch Slips

1. Clutch controls improperly adjusted. See dealer.
2. Worn friction discs. See dealer.
3. Insufficient clutch spring tension. See dealer.

Clutch Drags or Does Not Release

1. Clutch controls improperly adjusted. See dealer.
2. Primary chaincase overfilled.
3. Clutch discs warped. See dealer.

Clutch Chatters

1. Friction discs or steel discs worn or warped. See dealer.

Brakes

ABS System Behavior

1. ABS lamp does not shut off above 3 mph 5 km/h . See dealer.
2. Other ABS symptoms. Refer to ABS Symptoms and Conditions.

Brakes Do Not Hold Normally

1. Master cylinder low on fluid. See dealer.
2. Brake line contains air bubbles. See dealer.
3. Master or wheel cylinder piston worn. See dealer.
4. Brake pads contaminated with grease or oil. See dealer.
5. Brake pads badly worn. See dealer.
6. Brake disc badly worn or warped. See dealer.
7. Brake fades because of heat build up. Excessive braking or brake pads dragging. See dealer.
8. Brake drags. Insufficient hand lever free play. See dealer.

Heated Hand Grips

1. Engine must be running. Start engine.
2. Turn ignition switch off then back on. Start engine and set hand grip heat.
3. Check the P&A fuse.
4. See dealer.

Accessories

Genuine Motor Parts and Accessories

Stop at your Harley-Davidson dealer to pick up a copy of the Genuine Motor Parts and Accessories catalog or go to www.harley-davidson.com to view thousands of Genuine Motor Accessories that are available for Harley-Davidson motorcycles.

The website includes the following tools and resources for accessorizing and personalizing your motorcycle.

Online Catalog

The full Genuine Motor Parts and Accessories catalog is available online in PDF format. The catalog includes hundreds of pages of Harley-Davidson accessories and maintenance products. For performance parts, check out the Screamin' Eagle Pro Racing Parts catalog.

Shop For Your Bike

Browse through categories of accessories and options available specifically for your motorcycle. View product descriptions, pricing, fitment and online instruction sheets for many of the available products.

Customizer

Virtually redesign your motorcycle with parts and accessories using the Customizer. This tool allows you to experiment with different accessory and color combinations and shows how your motorcycle would look with the accessories installed. You can easily create a custom list of accessories to print out for your dealer.

Fit Shop

Learn how to customize your motorcycle to fit you personally. See how making changes to the suspension, seat, handlebars or foot controls can enhance the ergonomics and comfort of your motorcycle.

Custom Seats

Create a custom seat using selected designs, colors and textured materials. Custom seat specifications can be easily printed out for your dealer.

Custom Coverage

Add Accessories To Your New Ride

Harley-Davidson is offering a limited opportunity to purchase new accessories and have them installed at an authorized Harley-Davidson dealership **and** receive the Custom Coverage extended Limited Warranty rather than the standard one year Parts and Accessories post purchase over-the-counter warranty.

- Limited warranty for eligible *street legal* Genuine Harley-Davidson Motor Parts and Genuine Harley-Davidson Motor Accessories to run concurrent with the remainder of the motorcycle's 24-month manufacturer's warranty.
- Visit an authorized Harley-Davidson dealership within 60 days to qualify for Custom Coverage.
- Parts and accessories must be purchased and installed at an authorized Harley-Davidson dealership to qualify for Custom Coverage.
- Visit any authorized Harley-Davidson dealership as often as you like during the 60 days after purchase to select, purchase and install accessories.

Ride, personalize, customize. Take advantage of this Custom Coverage extended Limited Warranty offer today to make your bike your Custom ride.

NOTE:

Customers have 60 days after the motorcycle purchase date to participate in Custom Coverage extended Limited Warranty offer. Parts and Accessories must be purchased and installed at an authorized Harley-Davidson dealership. Parts and Accessories purchased via the internet are not eligible. To locate the authorized Harley-Davidson dealership nearest you, visit the Dealer Locator on www.harley-davidson.com.

Warranties and Responsibilities

Warranty and Maintenance

This Owner's Manual contains your new motorcycle limited warranty and your owner's maintenance record.

It is your responsibility as the owner to follow the maintenance schedule at the mileage intervals as specified in the Owner's Manual. All of the specified maintenance services must be performed to keep your limited warranty valid.

Some countries, states or other locations may require all regular maintenance and service work to be done by an authorized Harley-Davidson dealer for your limited warranty to remain in effect. Check with your authorized Harley-Davidson dealer for local requirements.

1. Make an appointment with a Harley-Davidson dealer for inspection and service prior to the first 1000 mi 1600 km , and as soon as possible after any problem arises.

2. Bring this Owner's Manual with you when you visit your authorized Harley-Davidson dealer to have your motorcycle inspected and serviced.

3. Have the dealer technician sign the maintenance record in the Owner's Manual at the proper mileage interval. These records should be retained by the owner as proof of proper maintenance.

4. Keep receipts covering any parts, service or maintenance performed.

These records should be transferred to each subsequent owner.

Use only Harley-Davidson approved parts and accessories that have been designed, tested and approved for your model and model year motorcycle.

Use of certain manufacturers' aftermarket performance parts may void all or parts of your limited warranty. See an authorized Harley-Davidson dealer for details.

Harley-Davidson authorized dealerships are independently owned and operated and may sell parts and accessories that are not manufactured or approved by Harley-Davidson for use on your motorcycle. Therefore, you should understand that Harley-Davidson is not and cannot be responsible for the quality, suitability, or safety of any non-Harley-Davidson part, accessory or design modification, including labor, which may be sold and/or installed by authorized Harley-Davidson dealerships.

Keeping It All Harley-Davidson

Genuine Harley-Davidson parts are engineered and tested specifically for use on your motorcycle. Insist that your authorized Harley-Davidson dealer uses only genuine Harley-Davidson replacement parts and accessories to keep your Harley-Davidson motorcycle and its limited warranty intact.

NOTE:

Installing off-road or competition parts to enhance performance may void all or part of your new motorcycle limited warranty. See the Harley-Davidson Motorcycle Limited Warranty in this manual or an authorized Harley-Davidson dealer for details.

CAUTION

It is possible to overload your vehicle's charging system by adding too many electrical accessories. If the combined electrical accessories operating at any one time consume more electrical current than the vehicle's charging system can produce, the electrical consumption can discharge the battery and cause damage to the vehicle's electrical system. See an authorized Harley-Davidson dealer for advice about the amount of current consumed by additional electrical accessories or for necessary wiring changes. (00211c)

California and Select International Markets Evaporative Emission Controls: 2013 Models

All new 2013 Harley-Davidson motorcycles sold in the State of California and select international markets are equipped with an evaporative emission control system. This system is designed to meet CARB and local regulations in effect at the time of manufacture.

The system requires a small amount of maintenance. Periodic inspection is required to make sure hoses are properly routed, not kinked or blocked and that all fittings are secure. Mounting hardware should also be checked periodically for tightness.

EPA Noise Regulations in the United States

EPA noise regulations require that the following statements be included in the Owner's Manual.

EPA Regulations

TAMPERING WITH NOISE CONTROL SYSTEM PROHIBITED: Federal law prohibits the following acts or the causing thereof: (1) The removal or rendering inoperative by any person other than for purposes of maintenance, repair, or replacement of any device or element of design incorporated into any new vehicle for the purpose of noise control prior to its sale or delivery to the ultimate purchaser or while it is in use, or (2) the use of the vehicle after such device or element of design has been removed or rendered inoperative by any person.

AMONG THOSE ACTS PRESUMED TO CONSTITUTE TAMPERING ARE THE FOLLOWING:

1. Replacing the muffler(s) and/or the entire exhaust system with parts not certified to be noise legal for street use.
2. Removing or modifying the muffler internal baffles in any way.
3. Replacing the air intake/cleaner assembly with one not certified to be noise legal for street use.
4. Modifying the air intake/cleaner assembly in such a way as to make the vehicle no longer noise legal for street use.

Harley-Davidson recommends that any and all noise related maintenance be done by an authorized Harley-Davidson dealer using genuine Harley-Davidson parts.

Warranty/Service Information

Any authorized Harley-Davidson dealer is responsible for providing the warranty repair work on your motorcycle. The fact that a dealership performs warranty repairs does not create an agency relationship between Harley-Davidson Motor Company and the authorized dealership. If you have any questions regarding warranty obligations contact your authorized Harley-Davidson dealer.

For normal service work or warranty work under the above conditions, you may obtain the name

and location of your nearest U.S. authorized Harley-Davidson dealer by calling 800-258-2464 (U.S. only). To find dealers worldwide, see www.harley-davidson.com.

Reporting Safety Defects in United States

Safety defects must be reported to the National Highway Traffic Safety Administration (NHTSA) and Harley-Davidson.

NHTSA Statement

If you believe that your motorcycle has a defect which could cause a crash or could cause injury or death, you should immediately inform the National Highway Traffic Safety Administration (NHTSA) in addition to notifying Harley-Davidson.

If NHTSA receives similar complaints, it may open an investigation, and if it finds that a safety defect exists in a group of motorcycles, it may order a recall and remedy campaign. However, NHTSA cannot become involved in individual problems between you, your authorized Harley-Davidson dealer, or Harley-Davidson.

Refer to NHTSA Contacts to contact NHTSA.

NHTSA Contacts

ITEM	DATA
Phone	Call the Auto Safety Hot Line toll-free at 888-DASH-2DOT
Mail	U.S. Department of Transportation, National Highway Traffic Safety Administration, Office of Defects Investigation, NVS-210, 400 7th Street S.W., Washington, D.C. 20590
Web site	www.nhtsa.dot.gov

You can also obtain other information about motor vehicle safety from the hot line.

Required Documentation for Imported Motorcycles

If a Harley-Davidson motorcycle is imported into the United States, additional documentation is required to be eligible for the United States Harley-Davidson's Limited Warranty. A Harley-Davidson dealer can provide a form explaining the requirements.

Owner Contact Information

If you move from your present address, sell your motorcycle, or purchase a pre-owned Harley-Davidson motorcycle, see an authorized Harley-Davidson dealer to update your owner contact information.

This will provide Harley-Davidson with an accurate registration (as required by law in some countries), and will allow Harley-Davidson to notify you in the event of a recall or product program.

The rights and benefits conferred upon you and the obligations of Harley-Davidson as set forth herein are separate and distinct from any rights and duties set forth in a service contract you may have purchased from a dealership and/or third-party insurance company. Harley-Davidson does not authorize any entity to expand the warranty obligations in connection with your motorcycle or this limited warranty.

When updating your contact information, your authorized Harley-Davidson dealer will need your vehicle identification number (VIN), odometer mileage, and date of vehicle transfer (if applicable).

Questions and Concerns

If you have questions or concerns regarding the performance of your motorcycle or the application of the limited warranty described here, or are not satisfied with the service you are receiving from an authorized Harley-Davidson dealership, do the following:

1. Contact the selling and/or servicing dealership and speak to the sales and/or service manager.

2. If your concern cannot be addressed to your satisfaction by the dealership, contact the Harley-Davidson Enterprise Contact Center by mailing your concern to the following address or calling the phone number below.

In the U.S., state warranty laws, often referred to as lemon laws, may provide you with certain rights not specifically mentioned here. To the extent allowed by your state, Harley-Davidson requires that you first send written notification of any defect or warranty non-conformity that you have experienced with your motorcycle to Harley-Davidson. Harley-Davidson appreciates the opportunity to investigate your concerns and restore your satisfaction in your motorcycle by making the necessary repairs consistent with the terms of the limited warranty. Harley-Davidson requests that you send your complaint to the Harley-Davidson Enterprise Contact Center.

- Harley-Davidson Motor Company
- Attention: Harley-Davidson Enterprise Contact Center
- P.O. Box 653
- Milwaukee, Wisconsin 53201
- (800) 258-2464 (U.S. only)
- (414) 343-4056

Limited Motorcycle Warranty

2013 HARLEY-DAVIDSON MOTORCYCLE LIMITED WARRANTY

24 Months/Unlimited Miles

Harley-Davidson warrants for any new 2013 Harley-Davidson motorcycle/sidecar that an authorized Harley-Davidson dealer will repair or replace without charge any parts found under normal use to be defective in factory materials or workmanship. Such repair or replacement of parts will be Harley-Davidson's sole obligation and your sole remedy under this limited warranty.

THERE IS NO OTHER EXPRESS WARRANTY (OTHER THAN THE SEPARATE EMISSIONS AND NOISE LIMITED WARRANTIES) ON THE MOTORCYCLE/SIDECAR. Any implied warranty of merchantability or fitness for particular purpose is limited to the duration of the express warranty, or to the duration set forth in your state's warranty statutes, whichever is shorter. The implied warranty is not transferred to subsequent purchasers/buyers.

Some states do not allow limitations on how long an implied warranty lasts, so the above limitation may not apply to you.

TO THE FULLEST EXTENT ALLOWED BY LAW, NEITHER HARLEY-DAVIDSON NOR ITS AUTHORIZED DEALERS SHALL BE LIABLE FOR LOSS OF TIME, INCONVENIENCE, LOSS OF MOTORCYCLE/SIDECAR USE, COMMERCIAL LOSS OR OTHER INCIDENTAL OR CONSEQUENTIAL DAMAGES.

Some states do not allow the exclusion or limitation of incidental or consequential damages, so the above limitation or exclusion may not apply to you.

This limited warranty gives you specific legal rights, and you may have other rights which vary from state to state.

The following terms and conditions apply to this limited warranty:

Duration

1. The duration of this limited warranty is twenty-four months, starting from the earlier of (a) the date of initial retail purchase and delivery from an authorized Harley-Davidson dealer, or (b) the third anniversary of the last day of the model year of the motorcycle/sidecar. Your authorized Harley-Davidson dealer will submit an electronic Sales and Warranty Registration form to initiate your limited warranty.

2. Any unexpired portion of this limited express warranty will be transferred to subsequent owners, upon the resale of the motorcycle/sidecar during the limited warranty period.

Owner's Obligations

To obtain warranty service, return your motorcycle/sidecar at your expense within the limited warranty period to an authorized dealer. The authorized Harley-Davidson dealer should be able to provide warranty service during normal business hours and as soon as possible, depending upon the workload of the authorized dealer's service department and the availability of necessary parts.

Exclusions

This limited warranty will not apply to any motorcycle/sidecar as follows:

1. Which has not been operated or maintained as specified in the Owner's Manual.

2. Which has been abused, neglected, misused, improperly stored, used "off the highway," or used for racing or competition of any kind.

3. Which is not manufactured to comply with the laws of the market in which it is registered.

4. Which has off-road or competition parts installed to enhance performance, or has other unapproved modifications (even if these modifications include genuine Harley-Davidson parts and accessories that are not approved for use on your motorcycle). These modifications may void all or part of your new motorcycle/sidecar limited warranty. See an authorized Harley-Davidson dealer for details.

5. Acts of God, war, riot, insurrection, natural disasters, including, but not limited to, nuclear contamination, lightning, forest fires, dust storms, hail storms, ice storms, earthquakes, floods, or for other circumstances out of Harley-Davidson's control.

6. Which has been in an accident, collision, dropped or struck.

Other Limitations

This warranty does not cover:

1. Parts and labor for normal maintenance as recommended in the Owner's Manual, or the replacement of parts due to normal wear and tear including, but not limited to, the following: tires, lubrication, oil and filter change, fuel system cleaning, battery maintenance, engine tune-up, spark plugs, brake, clutch, chain/belt adjustment and chain replacement.

2. Cosmetic concerns that arise as a result of owner abuse, lack of proper maintenance or environmental conditions (except concerns that result from defects in factory materials or workmanship, which are covered by this limited warranty for the duration of the limited warranty period).

3. Any cosmetic condition existing at the time of retail delivery that has not been documented by the authorized Harley-Davidson selling dealer prior to retail delivery.

4. Defects or damage to the motorcycle/sidecar caused by alterations outside of Harley-Davidson's factory specifications or caused by alterations or use of non-Harley-Davidson approved parts or accessories.

5. Damage caused by installation or use of non-Harley-Davidson components, even those installed by an authorized dealership, that cause a Harley-Davidson part to fail. Examples include, but are not limited to performance-enhancing powertrain components or software, exhaust systems, non-approved tires, lowering kits, handlebars, add-ons connected to the factory electrical system, etc.

Important: Read Carefully

---

1. Authorized Harley-Davidson dealers are independently owned and operated and may sell non-Harley-Davidson products. Because of this, HARLEY-DAVIDSON IS NOT RESPONSIBLE FOR THE SAFETY, QUALITY, OR SUITABILITY OF ANY NON-HARLEY-DAVIDSON PART, ACCESSORY OR DESIGN MODIFICATION INCLUDING, BUT NOT LIMITED TO, LABOR WHICH MAY BE SOLD AND/OR INSTALLED BY AUTHORIZED HARLEY-DAVIDSON DEALERS.

2. This limited warranty is a contract between you and Harley-Davidson. It is separate and apart from any warranty you may receive or purchase from an authorized Harley-Davidson dealer. An authorized Harley-Davidson dealer is not authorized to alter, modify, or in any way change the terms and conditions of this limited warranty.

3. Any warranty work or parts replacement authorized by Harley-Davidson will not preclude Harley-Davidson from later relying on any exclusion where applicable.

4. Harley-Davidson and its dealers reserve the right to modify or service motorcycles designed and manufactured by Harley-Davidson at any time without incurring any additional obligation to make the same alteration or change to a motorcycle previously built and sold. Harley-Davidson reserves the right to provide post-warranty repairs, conduct repair campaigns, offer good-will or customer satisfaction repairs or extend the warranty coverage for certain motorcycles at its sole discretion. Said repairs or extensions of warranty coverage in no way obligates Harley-Davidson to provide similar accommodations to other owners of similar motorcycles. Sometimes Harley-Davidson may offer a special adjustment program to pay all or part of the cost of certain repairs beyond the terms of your limited warranty. Check with your dealer to learn whether such programs are available to you. Your state may prohibit these types of offers, in which case, they may not be available to you.

5. The fact that a part is labeled or branded Harley-Davidson does not necessarily make it appropriate or warranted for the make and model of your motorcycle. The use of parts not designed and tested for your motorcycle may have negative consequences on the performance of your motorcycle and may create conditions not covered by the limited factory warranty.

Limited Noise Warranty

2013 HARLEY-DAVIDSON MOTORCYCLE NOISE CONTROL SYSTEM LIMITED WARRANTY

The following limited warranty applies to the noise control system, is in addition to the MOTORCYCLE LIMITED WARRANTY and EMISSION CONTROL SYSTEM LIMITED WARRANTY, and applies only to Harley-Davidson motorcycles sold in the U.S.

Harley-Davidson warrants to the first owner and each subsequent owner that this motorcycle is designed and built so as to conform at the time of sale with applicable regulations of the U.S. Environmental Protection Agency (as tested following F-76 Drive-By test procedure) and that it is free from defects in factory materials and workmanship which can cause this motorcycle not to meet U.S. Environmental Protection Agency Standards within one (1) year from initial retail purchase and delivery from an authorized Harley-Davidson dealer or one (1) year from the [second] anniversary of the last day of the model year of the motorcycle, or 3,730 miles 6,000 kilometers whichever occurs first. Any unexpired portion of this limited warranty will be transferred to subsequent owners, upon the resale of the motorcycle during the limited warranty period. If the motorcycle was used as a demonstrator or company motorcycle, then the limited warranty period may have started and/or expired prior to the initial retail sale. See an authorized Harley-Davidson

dealer for details.

THERE IS NO OTHER EXPRESS WARRANTY (OTHER THAN THE SEPARATE MOTORCYCLE AND EMISSIONS LIMITED WARRANTIES) ON THE MOTORCYCLE. ANY IMPLIED WARRANTY OF MERCHANTABILITY OR FITNESS FOR PARTICULAR PURPOSE IS LIMITED TO THE DURATION OF THIS LIMITED WARRANTY.

Some states do not allow limitations on how long an implied warranty lasts, so the above limitation may not apply to you.

The limited one year warranty period shall begin on the date the motorcycle is delivered to the first retail purchaser or, if the motorcycle is placed in service as a demonstrator or company motorcycle prior to sale at retail, on the date it is first placed in service.

THE FOLLOWING ITEMS ARE NOT COVERED BY THE NOISE CONTROL SYSTEM LIMITED WARRANTY

1. Failures which arise as a result of misuse, alteration, or non-performance of maintenance as specified in the Owner's Manual.
2. Replacing, removing, or modifying any portion of the NOISE CONTROL SYSTEM (consisting of the exhaust system and air intake/cleaner assembly) with parts not certified to be noise legal for street use.
3. Any motorcycle on which the odometer mileage has been changed so that the mileage cannot be determined.
4. TO THE FULLEST EXTENT ALLOWED BY LAW, NEITHER HARLEY-DAVIDSON NOR ITS AUTHORIZED DEALERS SHALL BE LIABLE FOR LOSS OF TIME, INCONVENIENCE, LOSS OF MOTORCYCLE USE, COMMERCIAL LOSS OR OTHER INCIDENTAL OR CONSEQUENTIAL DAMAGES.

Some states do not allow the exclusion or limitation of incidental or consequential damages, so the above limitation or exclusion may not apply to you.

Other Rights

This limited warranty gives you specific legal rights, and you may have other rights which vary from state to state.

Recommendations for Required Maintenance

It is recommended that any noise system maintenance be performed by an authorized Harley-Davidson dealer using genuine Harley-Davidson replacement parts. The maintenance, replacement or repair of the noise control system may be performed by any other qualified service outlet or individual. Non-genuine Harley-Davidson parts may be used only if such parts are certified to comply with U.S. Environmental Protection Agency Standards.

Limited Emission Warranty

2013 HARLEY-DAVIDSON EMISSION CONTROL SYSTEM LIMITED WARRANTY

The following limited warranty applies to the emission control system, is in addition to the MOTORCYCLE LIMITED WARRANTY and NOISE CONTROL SYSTEM LIMITED WARRANTY, and applies only to Harley-Davidson motorcycles certified for sale, registered, and normally operated in the U.S. Refer to the "CALIFORNIA EMISSIONS CONTROL WARRANTY STATEMENT" for additional warranty provisions applicable to California motorcycles.

Harley-Davidson Motor Company warrants to the first owner and each subsequent owner that this vehicle is designed, built, and equipped so as to conform at the time of sale with applicable regulations under section 7521 of Title 42 of the United States Code, and that it is free from defects in materials and workmanship which would cause this motorcycle to fail to conform with

applicable regulations for five (5) years from the initial retail purchase and delivery from an authorized Harley-Davidson dealer (or five (5) years from the date the motorcycle is first placed in service, if it is first placed in service as a "demonstrator" or "company" motorcycle prior to delivery), or 18,641 miles 30,000 kilometers , whichever occurs first. Any unexpired portion of this limited warranty will be transferred to subsequent owners, upon the resale of the motorcycle during the warranty period.

THERE IS NO OTHER EXPRESS WARRANTY (OTHER THAN THE SEPARATE MOTORCYCLE AND NOISE LIMITED WARRANTIES) ON THE MOTORCYCLE. ANY IMPLIED WARRANTY OF MERCHANTABILITY OR FITNESS FOR PARTICULAR PURPOSE IS LIMITED TO THE DURATION OF THIS WARRANTY.

Some states do not allow limitations on how long an implied warranty lasts, so the above limitation may not apply to you.

The limited warranty period shall begin on the date the motorcycle is delivered to the first retail purchaser or, if the motorcycle is placed in service as a demonstrator or company motorcycle prior to sale at retail, on the date it is first placed in service.

THE FOLLOWING ITEMS ARE NOT COVERED BY THE EMISSION CONTROL SYSTEM LIMITED WARRANTY

1. Failures which arise as a result of misuse, tampering, alterations, accident, acts of nature, or improper or inadequate maintenance as specified in the Owner's Manual.

2. Required maintenance services (as specified in the Owner's Manual) and the replacement of parts (such as spark plugs, fuel and oil filters, etc.) used in required maintenance.

3. Any motorcycle on which the odometer mileage has been changed so that the mileage cannot be determined.

4. TO THE FULLEST EXTENT ALLOWED BY LAW, NEITHER HARLEY-DAVIDSON NOR ITS AUTHORIZED DEALERS SHALL BE LIABLE FOR LOSS OF TIME, INCONVENIENCE, TOWING OF THE VEHICLE, LOSS OF MOTORCYCLE USE, COMMERCIAL LOSS OR OTHER INCIDENTAL OR CONSEQUENTIAL DAMAGES.

Some states do not allow the exclusion or limitation of incidental or consequential damages, so the above limitation or exclusion may not apply to you.

Items Covered by this Emission Warranty

The emission control system warranty may cover the following parts if the defect is deemed to be emissions related:

- Intake manifold
- Air cleaner backplate with solenoid operated door, as applicable
- Air cleaner filter
- Cam shaft
- Spark plug
- Ignition coil
- Ignition wires
- Vapor valve
- Catalytic converter mufflers, as applicable
- Crankcase breather
- MAP sensor

Fuel Injection:

- Induction module (including all sensors, injectors and all their associated connectors)
- Engine temperature sensor
- Electronic control unit
- Regulator/fuel pump (for leaks and/or high and low pressure failures)
- Fuel filter
- Oxygen sensors

Fuel Tank: (non-cosmetic failures only)

- Leaks
- Fuel vapor separator
- Fuel cap

If used on the above: hoses, clamps, fittings, tubing, sealing gaskets and mounting hardware.

Detailed instructions for proper maintenance and use of this motorcycle, including the time and/or mileage intervals at which such maintenance is to be performed, may be found in this Owner's Manual under Regular Service Intervals.

Other Rights

This limited warranty gives you specific legal rights, and you may have other rights which vary from state to state.

Recommendations for Required Maintenance

It is recommended that any emission system maintenance be performed by an authorized Harley-Davidson dealer using genuine Harley-Davidson replacement parts. However the maintenance, replacement or repair of the emissions control system may be performed by any other qualified service outlet or individual. Non-genuine Harley-Davidson parts may be used only if such parts are certified to comply with U.S. Environmental Protection Agency Standards.

California Emissions Control Warranty

CALIFORNIA EMISSIONS CONTROL WARRANTY STATEMENT

Your Warranty Rights and Obligations

The California Air Resources Board and Harley-Davidson Motor Company are pleased to explain the emission control system warranty on your 2013 model year motorcycle. In California, new motor vehicles must be designed, built and equipped to meet the State's stringent anti-smog standards. Harley-Davidson Motor Company must warrant the emission control system on your motorcycle for the periods of time listed below provided there has been no abuse, unapproved modification, neglect or improper maintenance of your motorcycle.

Your emission control system may include parts such as the carburetor or fuel-injection system, the ignition system, catalytic converter, and engine computer. Also included may be hoses, connectors and other emission-related assemblies.

Where a warrantable condition exists, within the warranty period noted below, your authorized Harley-Davidson dealer will repair your motorcycle at no cost to you including diagnosis, parts and labor.

Manufacturer's Warranty Coverage

For a period of use of five years or 18,641 miles 30,000 kilometers , whichever first occurs, beginning on the date the motorcycle is delivered to the ultimate purchaser:

If any emission related part on your motorcycle is defective, the part will be repaired or replaced by Harley-Davidson Motor Company. This is your emission control system DEFECTS WARRANTY.

Owner's Warranty Responsibilities

As the motorcycle owner, you are responsible for the performance of the required maintenance listed in your Owner's Manual. Harley-Davidson recommends that you retain all receipts covering maintenance on your motorcycle, but Harley-Davidson cannot deny emissions warranty coverage solely for the lack of receipts or for your failure to ensure the performance of all scheduled maintenance.

You are responsible for presenting your motorcycle to an authorized Harley-Davidson dealer as soon as a problem exists. The warranty repairs should be completed in a reasonable amount of time, not to exceed 30 days.

As the motorcycle owner, you should also be aware that Harley-Davidson may deny you warranty coverage if your motorcycle or a part has failed due to abuse, neglect, improper maintenance or unapproved modifications.

If you have any questions regarding your warranty rights and responsibilities, you should contact Harley-Davidson Customer Service Department at (800) 258-2464 (U.S. only) or (414) 343-4056, or the California Air Resources Board at 9528 Telstar Ave., El Monte, California 91731.

Additional Warranty Terms

The warranty period starts the date the motorcycle is delivered to the ultimate purchaser or, if the motorcycle is placed in service as a demonstrator or company motorcycle prior to sale at retail, the date it is first placed in service.

The emission control system of each new Harley-Davidson® motorcycle was designed, built and tested using only Genuine Harley-Davidson parts and with these parts the motorcycle is certified as being in conformity with California emission control regulations.

We recommend that you take your motorcycle to an authorized Harley-Davidson dealer for repairs under this warranty. The dealer has factory-trained mechanics and genuine Harley-Davidson parts. However, in the case of an "emergency" (as defined below), you could have repairs performed at any available service establishment or by the owner, using any replacement part. An authorized Harley-Davidson dealer not being reasonably available, or a part not being available within a reasonable time period (not to exceed 30 days from the time the motorcycle is initially presented to a Harley-Davidson dealer for repair) constitutes an emergency. Harley-Davidson will reimburse the owner for such repairs, including diagnosis, only if it is established that the repairs are covered under this emission warranty. Harley-Davidson's parts reimbursement, however, will not exceed our suggested retail price for all warranted parts replaced and our labor reimbursement will be limited to our recommended time allowances for emission system repairs at the geographically appropriate hourly labor rate.

To obtain reimbursement from Harley-Davidson for such emergency repairs, you must keep all failed parts and original receipts, so you can present them to an authorized Harley-Davidson dealer for inspection. Harley-Davidson recommends that you bring your motorcycle to an authorized dealer for inspection to ensure that the emergency repairs were done properly.

Remember: Use of non-Harley-Davidson replacement parts may impair the effectiveness of the emission control system or otherwise damage your motorcycle. If other than genuine Harley-Davidson parts are used for maintenance, replacement or repair of components affecting emission control, you should obtain written assurances that such non-Harley-Davidson parts are warranted by their manufacturer to be equal in quality to Genuine Harley-Davidson parts in both performance and durability. The use of non-Harley-Davidson replacement parts does not invalidate the existing warranty, if any, on other Harley-Davidson components unless the non-Harley-Davidson parts cause damage to warranted parts or result in the creation of an emissions non-compliant motorcycle. However, HARLEY-DAVIDSON ASSUMES NO LIABILITY UNDER THIS WARRANTY WITH RESPECT TO ANY PARTS WHICH ARE NOT GENUINE HARLEY-DAVIDSON PARTS, unless Harley-Davidson parts cause damage to non-genuine Harley-Davidson parts.

What Is Covered By This Emission Warranty

The emission control system warranty covers the following "warranted parts" only:

- Intake manifold
- Air cleaner backplate with solenoid operated door, as applicable
- Air cleaner filter
- Cam shaft
- Spark plug
- Ignition coil
- Ignition wires
- Charcoal canister
- Vapor valve
- Catalytic converter mufflers, as applicable
- Crankcase breather
- Purge control valves
- MAP sensor

Fuel Injection:

- Induction module (including all sensors, injectors and all their associated connectors)
- Engine temperature sensor
- Electronic control unit
- Regulator/fuel pump (for leaks and/or high and low pressure failures)
- Fuel filter
- Oxygen sensors

Fuel Tank: (non-cosmetic failures only)

- Leaks
- Fuel vapor separator
- Fuel cap

If used on the above: hoses, clamps, fittings, tubing, sealing gaskets and mounting hardware

What Is Not Covered By This Emission Warranty

The emission control system warranty does not cover:

Malfunctions in any "warranted parts" caused by any of the following: abuse, misuse, unapproved modification or alteration, tampering, disconnection, or improper or inadequate maintenance. The warranty also does not cover replacement of listed parts in the event that the vehicle has been rendered emissions non-compliant in the state of California through actions noted above.

Damage resulting from accident, acts of nature or other events beyond the control of Harley-Davidson.

The repair or replacement of "warranted parts" which are scheduled for replacement prior to 18,641 mi 30,000 km , once these parts have been replaced at the first replacement interval as part of required maintenance services.

Repairs and services performed by anyone other than an authorized Harley-Davidson Dealer (except in case of emergency as defined above).

Loss of time, inconvenience, loss of use of the motorcycle, towing of the vehicle, or commercial loss and/or consequential damages.

Repairs on any motorcycle of which odometer mileage has been changed so that mileage cannot be readily determined.

Limited Radio Warranty

2013 LIMITED RADIO WARRANTY

Harley-Davidson warrants that your Harley-Davidson radio will be free from factory defects in factory materials and workmanship, under normal use and service, for a period of twenty-four (24) months starting from the earlier of (a) the date of initial retail purchase of the motorcycle/sidecar

on which the radio is installed, or (b) the third anniversary of the last day of the model year of the motorcycle/sidecar on which the radio is installed. Any unexpired portion of this limited warranty will be transferred to subsequent owners, upon the resale of the motorcycle/sidecar during the limited warranty period. If the motorcycle/sidecar was used as a demonstrator or company motorcycle, then the limited warranty period may have started and/or expired prior to the initial retail sale. See an authorized Harley-Davidson Dealer for details.

This limited warranty does not cover defects or damage due to abuse, misuse or improper installation, or any radio on a motorcycle/sidecar which has been registered with Harley-Davidson as a collector's vehicle. See an authorized Harley-Davidson dealer for details.

To obtain warranty service, return your motorcycle/sidecar with sound system intact, at your expense, within the limited warranty period to an authorized Harley-Davidson dealer. Authorized Harley-Davidson dealers should be able to provide warranty service during normal business hours and as soon as possible, depending upon the service department's workload and the availability of necessary parts.

The remedy for breach of this warranty is expressly limited to the repair or replacement **(which may include a refurbished replacement radio)**, without charge for parts and labor, of any part that proves to be defective, AND DOES NOT EXTEND TO LIABILITY FOR CONSEQUENTIAL DAMAGES, COSTS OR EXPENSES, INCLUDING LOSS OF TIME, INCONVENIENCE OR LOSS OF USE OF THE VEHICLE, RESULTING FROM ANY PART THAT PROVES TO BE DEFECTIVE.

THERE IS NO OTHER EXPRESS WARRANTY ON THE RADIO. ANY IMPLIED WARRANTY RELATING TO THIS RADIO, INCLUDING WARRANTIES OF MERCHANTABILITY OR FITNESS FOR A PARTICULAR PURPOSE, IS EXPRESSLY LIMITED TO THE DURATION OF THIS LIMITED WARRANTY.

TO THE FULLEST EXTENT ALLOWED BY LAW, HARLEY-DAVIDSON AND ITS AUTHORIZED DEALERS SHALL NOT BE LIABLE FOR LOSS OF TIME, INCONVENIENCE, LOSS OF MOTORCYCLE USE, COMMERCIAL LOSS OR OTHER INCIDENTAL OR CONSEQUENTIAL DAMAGES.

Some states do not allow the exclusion or limitation of incidental or consequential damages, so the above limitation or exclusion may not apply to you.

Other Rights

This limited warranty gives you specific legal rights, and you may have other rights which vary from state to state.

Maintenance Scheduling

Regular Service Intervals

Refer to Regular Service Intervals: 2013 Touring Models. Regular maintenance must be performed at specified intervals to help keep your new Harley-Davidson motorcycle operating at peak performance and ke your new motorcycle limited warranty in force. Your authorized Harley-Davidson dealer knows best how to s your motorcycle with factory approved methods and equipment assuring you of thorough and competent workmanship.

Some maintenance items should be done at least once per year as specified, even if the next mileage interv not been reached. In severe riding conditions, some maintenance items may need to be performed more fre Refer to the notes in Regular Service Intervals: 2013 Touring Models.

NOTES:

- *The use of parts and service procedures other than Harley-Davidson approved parts and service proce may void the limited warranty. Any alterations to the emission system components, such as the intake exhaust system, may be in violation of motor vehicle laws.*
- *Some countries, such as Brazil, may require all regular maintenance to be performed by an authorized Davidson dealer for your limited warranty to remain in effect. Check with your authorized Harley-David*

dealer.

- *Some countries, such as Brazil, may require additional annual (or semi-annual) regular maintenance s be performed to keep your limited warranty in effect and/or comply with vehicle regulations. Check with authorized Harley-Davidson dealer and check the motorcycle regulations in your country for local requirements.*
- *After completing the final service interval in Regular Service Intervals: 2013 Touring Models, rep service schedule starting at the 5000 mi 8000 km interval.*

⚠WARNING

Perform the service and maintenance operations as indicated in the regular service interval table. Lack of regular maintenance at the recommended intervals can affect the safe operation of your motorcycle, which could result in death or serious injury. (00010a)

⚠WARNING

If you operate your motorcycle under adverse conditions (severe cold, extreme heat, very dusty environment, very bad roads, through standing water, etc.), you should perform the regular maintenance intervals more frequently to ensure the safe operation of your motorcycle. Failure to maintain your motorcycle could result in death or serious injury. (00094a)

Regular Service Intervals: 2013 Touring Models

ITEM SERVICED	PROCEDURE	1000 MI 1600 KM	5000 MI 8000 KM	10000 MI 16000 KM	15000 MI 24000 KM	20000 MI 32000 KM	25000 MI 40000 KM	30000 MI 48000 KM	35000 MI 56000 KM	40000 MI 64000 KM	45000 MI 72000 KM	50000 MI 80000 KM	M
Engine oil and filter	Replace	X	X	X	X	X	X	X	X	X	X	X	3
Oil lines and brake system	Inspect for leaks, contact or abrasion	X	X	X	X	X	X	X	X	X	X	X	1
Air cleaner	Inspect, service as required		X	X	X	X	X	X	X	X	X	X	7
Tires	Check pressure, inspect tread	X	X	X	X	X	X	X	X	X	X	X	3
Wheel spokes (if equipped)	Check tightness	X	X			X			X			X	1
Primary chaincase lubricant	Replace	X		X		X		X		X		X	7
Transmission lubricant	Replace	X				X				X			7
Clutch	Check adjustment	X	X	X	X	X	X	X	X	X	X	X	1
Drive belt and sprockets	Inspect, adjust belt	X	X	X	X	X	X	X	X	X	X	X	1
Rear sprocket isolators		Inspect for wear at each rear tire change.											

Brake and clutch controls	Check and lubricate	X	X	X	X	X	X	X	X	X	X	X	1
Jiffy stand	Inspect and lubricate	X	X	X	X	X	X	X	X	X	X	X	1
Fuel lines and fittings	Inspect for leaks, contact or abrasion	X	X	X	X	X	X	X	X	X	X	X	1
Fuel filter element		Replace every 100,000 mi 160,000 km .											1
Brake fluid	Inspect sight glass	X	X	X	X	X	X	X	X	X	X	X	4
Brake pads and discs	Inspect for wear	X	X	X	X	X	X	X	X	X	X	X	
Spark plugs	Replace							X					8
Electrical equipment and switches	Check operation	X	X	X	X	X	X	X	X	X	X	X	
Front forks	Rebuild											X	1
Steering head bearings	Lubricate	X		X		X		X		X			
Steering head bearings	Adjust						X					X	1
Air suspension (if equipped)	Check pressure, operation and leakage	X	X	X	X	X	X	X	X	X	X	X	1
Windshield bushings (if applicable)	Inspect			X		X		X		X		X	1
Fuel door, Tour-Pak, saddlebags (if equipped)	Lubricate hinges and latches	X	X	X	X	X	X	X	X	X	X	X	
Critical fasteners	Check tightness	X		X		X		X		X		X	1
Battery		Check battery and clean connections annually.											
Exhaust system	Inspect for leaks, cracks, and loose or missing fasteners or heat shields	X	X	X	X	X	X	X	X	X	X	X	3
Road test	Verify component and system functions	X	X	X	X	X	X	X	X	X	X	X	
NOTES:	1. Should be performed by an authorized Harley-Davidson dealer, unless you have the prope service data and are mechanically qualified. 2. Disassemble, lubricate and inspect every 50,000 mi 80,000 km . 3. Perform annually or at specified intervals, whichever comes first. 4. Change DOT 4 brake fluid and flush system every two years.												

	5. Perform spoke tension check at 1000 mi 1600 km , 5000 mi 8000 km , 20,000 mi 32,000 k services and every 15,000 mi 24,000 km interval thereafter. Not all vehicles are equipped wit spoke wheels. Consult appropriate topic in service manual. 6. Disassemble, inspect, rebuild forks and replace fork oil every 50,000 mi 80,000 km . 7. Perform maintenance more frequently in severe riding conditions (such as extreme temper dusty environments, mountainous or rough roads, long storage conditions, short runs, heavy stop/go traffic or poor fuel quality). 8. Perform every two years or at specified intervals, whichever comes first.

Owner's Maintenance Records

SERVICE MILE INTERVAL	DATE	DEALER NUMBER	TECHNICIAN NAME	TECHNICI SIGNATU
1000 mi 1600 km				
5000 mi 8000 km				
10,000 mi 16,000 km				
15,000 mi 24,000 km				
20,000 mi 32,000 km				
25,000 mi 40,000 km				
30,000 mi 48,000 km				
35,000 mi 56,000 km				
40,000 mi 64,000 km				
45,000 mi 72,000 km				
50,000 mi 80,000 km				

Service Literature

Refer to Service Literature: 2013 Touring Models. Visit any Harley-Davidson dealer or go to www.harle davidson.com to purchase a service or parts manual for your motorcycle. Factory authorized manuals are th complete and detailed source of information outside of your Harley-Davidson dealer.

Service Literature: 2013 Touring Models

DOCUMENT	LANGUAGE	PART NUME
Touring Models Service Manual	English	99483-13
	French	99483-13FR
	German	99483-13DE
	Spanish	99483-13ES
	Italian	99483-13IT
	Simplified Chinese	99483-13ZH
	Japanese	99483-13JA
Touring Models Electrical Diagnostics Manual	English	99497-13
	French	99497-13FR
	German	99497-13DE
	Spanish	99497-13ES
	Italian	99497-13IT
	Simplified Chinese	99497-13ZH
	Japanese	99497-13JA

H-D Michigan, Inc. Trademark Information

Bar & Shield, Cross Bones, Digital Tech, Digital Technician, Digital Technician II, Dyna, Electra Glide, Evolut
Bob, Fat Boy, Forty-Eight, Glaze, Gloss, H-D, H-Dnet.com, Harley, Harley-Davidson, HD, Heritage Softail, Ir
Low Rider, Night Rod, Nightster, Night Train, Profile, Revolution, Road Glide, Road King, Road Tech, Rocke
Screamin' Eagle, Seventy-Two, Softail, Sportster, Street Glide, Street Rod, Sun Ray, Sunwash, Super Glide,
SuperLow, Switchback, SYN3, TechLink, TechLink II, Tour-Pak, Twin Cam 88, Twin Cam 88B, Twin Cam 96
Cam 96B, Twin Cam 103, Twin Cam 103B, Twin Cam 110, Twin Cam 110B, Ultra Classic, V-Rod, VRSC, XI
and Harley-Davidson Genuine Motor Parts and Genuine Motor Accessories are among the trademarks of H-
Michigan, Inc.

Product Registered Marks

Apple, Alcantara S.p.A., Allen, Amp Multilock, Bluetooth, Brembo, Delphi, Deutsch, Dunlop, Dynojet, Fluke, (
Versilube, Garmin, Gunk, Hydroseal, Hylomar, iPhone, iPod, Kevlar, Lexan, Loctite, Lubriplate, Keps, K&N,
Magnaflux, Marson Thread-Setter Tool Kit, MAXI fuse, Molex, Michelin, MPZ, Mulitilock, nano, NGK, Novus,
Packard, Pirelli, Permatex, Philips, PJ1, Pozidriv, Robinair, S100, Sems, Snap-on, Teflon, Threadlocker, Tor
Torco, TORX, Tufoil, Tyco, Ultratorch, Velcro, X-Acto, XM Satellite Radio, and zumo are among the tradema
their respective owners.