2016 SuperLow 1200T - Owner's Manual

Safety First

Safe Operating Rules

⚠WARNING

Motorcycles are different from other vehicles. They operate, steer, handle and brake differently. Unskilled or improper use could result in loss of control, death or serious injury. (00556c)

- Take a rider training course.
- Read owner's manual before riding, adding accessories or servicing.
- Wear a helmet, eye protection and protective clothing.
- Never tow a trailer.

Before operating your motorcycle, read and follow the operating and maintenance instructions in this manual. Follow these basic rules for your personal safety.

- Know and respect the rules of the road. Carefully read and familiarize yourself with the motorcycle safety information provided by your country or state. Read the RIDING TIPS booklet in your owner's kit (in the U.S.) and the MOTORCYCLE HANDBOOK from your state or regional traffic authority. The RIDING TIPS booklet is also available on www.msf-usa.org. See Rules of the Road.
- Before starting engine, check for proper operation of brake, clutch, shifter, throttle controls, correct fuel and oil supply.

⚠WARNING

Harley-Davidson parts and accessories are designed for Harley-Davidson motorcycles. Using non-Harley-Davidson parts or accessories can adversely affect performance, stability or handling, which could result in death or serious injury. (00001b)

- Use only Harley-Davidson approved parts and accessories. Use of certain other manufacturer's performance parts may void your new motorcycle warranty, except where prohibited by law. See your Harley-Davidson dealer for details.

⚠WARNING

Stop the engine when refueling or servicing the fuel system. Do not smoke or allow open flame or sparks near gasoline. Gasoline is extremely flammable and highly explosive, which could result in death or serious injury. (00002a)

When refueling your motorcycle, observe the following rules.

- Refuel in a ventilated area with the engine turned off.
- Remove fuel filler cap slowly.
- Do not smoke or allow open flames or sparks when refueling or servicing the fuel system.
- Do not fill fuel tank above the bottom of the filler neck insert.
- Leave air space to allow for fuel expansion.

⚠WARNING

Do not store motorcycle with gasoline in tank within the home or garage where open flames, pilot lights, sparks or electric motors are present. Gasoline is extremely flammable and highly explosive, which could result in death or serious injury. (00003a)

⚠WARNING

Engine exhaust from this product contains chemicals known to the State of California to cause cancer, and birth defects or other reproductive harm. (00004f)

⚠WARNING

Do not run motorcycle in a closed garage or confined area. Inhaling motorcycle exhaust, which contains poisonous carbon monoxide gas, could result in death or serious injury. (00005a)

⚠WARNING

The jiffy stand locks when placed in the full forward (down) position with vehicle weight on it. If the jiffy stand is not in the full forward (down) position with vehicle weight on it, the vehicle can fall over which could result in death or serious injury. (00006a)

⚠WARNING

Be sure jiffy stand is fully retracted before riding. If jiffy stand is not fully retracted, it can contact the road surface causing a loss of vehicle control, which could result in death or serious injury. (00007a)

- A new motorcycle must be operated according to the special break-in procedure. See Break-in Riding Rules.
- Operate motorcycle at moderate speed and out of traffic until you become thoroughly familiar with its operation and handling characteristics under all conditions.

NOTE:

Harley-Davidson recommends that you obtain information and formal training in the correct motorcycle riding technique. In the United States, both the Harley-Davidson Riding Academy (1-414-343-4056) and the Motorcycle Safety Foundation (1-800-446-9227) offer beginning and advanced rider safety courses.

⚠WARNING

Travel at speeds appropriate for road and conditions and never travel faster than posted speed limit. Excessive speed can cause loss of vehicle control, which could result in death or serious injury. (00008a)

- Do not exceed the legal speed limit or drive too fast for existing conditions. Always reduce speed when poor driving conditions exist. High speed increases the influence of any other condition affecting stability and increases the possibility of loss of control.
- Pay strict attention to road surfaces and wind conditions. Keep both hands on the handlebar grips when riding the motorcycle. Any two-wheeled vehicle may be subject to upsetting forces such as wind blasts from passing trucks, holes in the pavement, rough road surfaces and rider control error. These forces may influence the handling characteristics of your motorcycle. If you experience these conditions, reduce speed and guide the motorcycle with a relaxed grip to a controlled condition. Do not brake abruptly or force the handlebar. This may aggravate an unstable condition.
- Keep cargo weight concentrated close to the motorcycle and as low as possible to minimize the change in the motorcycle's center of gravity. Distribute weight evenly on both sides of the vehicle. Do not load bulky items too far behind the rider or add weight to the handlebars or front forks. Do not exceed maximum specified load in each saddlebag.

NOTE:

New riders should gain experience under various conditions while riding at moderate speeds.

- Operate your motorcycle defensively. Remember, a motorcycle does not afford the same protection as an automobile in an accident. One common risk for an accident occurs when another vehicle turns left in front of an on-coming motorcyclist. Operate only with headlamp on.
- Wear an approved helmet, clothing and foot gear suited for motorcycle riding. Bright or light colors are best for greater visibility in traffic, especially at night. Avoid loose, flowing garments and scarves.

⚠WARNING

Avoid contact with exhaust system and wear protective clothing that completely covers legs while riding. Exhaust pipes and mufflers get very hot when engine is running and remain too hot to touch, even after engine is turned off. Failure to wear protective clothing could result in burns or other serious injury. (00009a)

- When carrying passengers, it is your responsibility to instruct them on proper riding procedures. See the RIDING TIPS booklet included in your owner's kit (in the U.S.) or available on www.msf-usa.org.

- Do not allow other individuals, under any circumstances, to operate your motorcycle unless you know that they are experienced and licensed riders. Make sure they are thoroughly familiar with the operation of your particular motorcycle.

- Protect your motorcycle against theft. Using the fork lock immediately after parking your motorcycle will discourage unauthorized use or theft.
- Safe motorcycle operation requires alert mental judgment combined with a defensive driving attitude. Do not allow fatigue, alcohol or drugs to endanger your safety or that of others.
- For vehicles with a sound system, adjust the volume to a non-distracting level before operating vehicle.
- Proper care and maintenance, including tire pressure, tire condition, tread depth and proper adjustment to steering head bearings are important to the stability and safe operation of the motorcycle. Maintain your motorcycle in proper operating condition. Refer to Regular Service Intervals: 2016 Sportster Models.

⚠WARNING

Do not operate vehicle with forks locked. Locking the forks restricts the vehicle's turning ability, which could result in death or serious injury. (00035a)

⚠WARNING

Perform the service and maintenance operations as indicated in the regular service interval table. Lack of regular maintenance at the recommended intervals can affect the safe operation of your motorcycle, which could result in death or serious injury. (00010a)

⚠WARNING

Do not operate motorcycle with loose, worn or damaged steering or suspension systems. Contact a Harley-Davidson dealer for repairs. Loose, worn or damaged steering or suspension components can adversely affect stability and handling, which could result in death or serious injury. (00011a)

⚠WARNING

Regularly inspect shock absorbers and front forks. Replace leaking, damaged or worn parts that can adversely affect stability and handling, which could result in death or serious injury. (00012a)

⚠WARNING

Use Harley-Davidson replacement fasteners. Aftermarket fasteners can adversely affect performance, which could result in death or serious injury. (00013a)

- See your Harley-Davidson service manual for proper torque values.
- Aftermarket fasteners may not have the specific property requirements to perform properly.

⚠WARNING

Be sure tires are properly inflated, balanced, undamaged, and have adequate tread. Inspect your tires regularly and see a Harley-Davidson dealer for replacements. Riding with excessively worn, unbalanced, improperly inflated, overloaded or damaged tires can lead to tire failure and adversely affect stability and handling, which could result in death or serious injury. (00014b)

⚠WARNING

Replace punctured or damaged tires. In some cases, small punctures in the tread area may be repaired from within the removed tire by a Harley-Davidson dealer. Speed should NOT exceed 50 mph (80 km/h) for the first 24 hours after repair, and the repaired tire should NEVER be used over 80 mph (130 km/h). Failure to follow this warning could lead to tire failure and result in death or serious injury. (00015b)

⚠WARNING

Only install original equipment tire valves and valve caps. A valve, or valve and cap combination, that is too long or too heavy can strike adjacent components and damage the valve, causing rapid tire deflation. Rapid tire deflation can cause loss of vehicle control, which could result in death or serious injury. (00281a)

⚠WARNING

Do not exceed the motorcycle's Gross Vehicle Weight Rating (GVWR) or Gross Axle Weight Rating (GAWR). Exceeding these weight ratings can lead to component failure and adversely affect stability, handling and performance, which could result in death or serious injury. (00016f)

CAUTION

When lifting a motorcycle using a jack, be sure jack contacts both lower frame tubes where down tubes and lower frame tubes converge. Never lift by jacking on cross-members, oil pan, mounting brackets, components or housings. Failure to comply can cause serious damage resulting in the need to perform major repair work. (00586d)

- GVWR is the sum of the weight of the motorcycle, accessories and the maximum weight of the rider, passenger and cargo that can be safely carried.
- GAWR is the maximum amount of weight that can be safely carried on each axle.
- The GVWR and GAWR are shown on the information label which is on the frame downtube in some destinations. See Specifications.

⚠WARNING

Do not tow a disabled motorcycle. Towing can adversely affect stability and handling, which could result in death or serious injury. (00017a)

⚠WARNING

Do not pull a trailer with a motorcycle. Pulling a trailer can cause tire overload, damage and

failure, reduced braking performance, and adversely affect stability and handling, which could result in death or serious injury. (00018c)

⚠WARNING

Batteries, battery posts, terminals and related accessories contain lead and lead compounds, and other chemicals known to the State of California to cause cancer, and birth defects or other reproductive harm. Wash hands after handling. (00019e)

⚠WARNING

Do not open storage compartments while riding. Distractions while riding can lead to loss of control, which could result in death or serious injury. (00082a)

⚠WARNING

Consult a Harley-Davidson dealer regarding any questions or problems that occur in the operation of your motorcycle. Failure to do so can aggravate an initial problem, cause costly repairs, cause an accident and could result in death or serious injury. (00020a)

⚠CAUTION

Direct contact of D.O.T. 4 brake fluid with eyes can cause irritation. Avoid eye contact. In case of eye contact flush with large amounts of water and get medical attention. Swallowing large amounts of D.O.T. 4 brake fluid can cause digestive discomfort. If swallowed, obtain medical attention. Use in well ventilated area. KEEP OUT OF REACH OF CHILDREN. (00240a)

- Make sure all equipment required by federal, state and local law is installed and in good operating condition.

Anti-lock Brake System (ABS)

⚠WARNING

If ABS lamp continues flashing at speeds greater than 3 mph (5 km/h) or remains on continuously, the ABS is not operating. The standard brake system is operational, but wheel lock up can occur. Contact a Harley-Davidson Dealer to have ABS repaired. A locked wheel will skid and can cause loss of vehicle control, which could result in death or serious injury. (00361b)

⚠WARNING

ABS cannot prevent lockup of rear wheel due to engine braking. ABS will not aid in cornering or on loose/uneven surfaces. A locked wheel will skid and can cause loss of vehicle control, which could result in death or serious injury. (00362a)

To operate motorcycles equipped with an anti-lock brake system, see Brake System.

Rules of the Road

- Always sound your horn, use your turn signals and exercise caution when passing other vehicles going in the same direction. Never pass going in the same direction at street intersections, on curves or when going up or down a hill.
- At street intersections, give the right-of-way. Do not presume you have the right-of-way, as the other driver may not know that it is your turn.
- Always signal when preparing to stop, turn or pass.
- Promptly obey all traffic signs, including those signs used for the control of traffic at intersections. Always obey traffic signs near schools and at railroad crossings.
- When intending to turn, signal at least 100 ft 30.5 m before reaching the turning point. If turning across an intersection, move over to the centerline of the street (unless local rules require otherwise). Slow down when entering the intersection and turn carefully.
- Never anticipate a traffic light. When a change is indicated from GO to STOP (or STOP to GO), slow down and wait for the light to change. Never run through a yellow or red traffic light.
- While turning, watch for pedestrians, animals, as well as vehicles.
- Do not leave the curb or parking area without signaling. Make sure that your way is clear to enter moving traffic. A moving line of traffic always has the right-of-way.
- Make sure that your license plate is installed in the position specified by law. Make sure that your license plate is always clearly visible. Keep the license plate clean.
- Ride at a safe speed that is consistent with the type of highway you are on. Pay strict attention to whether the road is dry, oily, icy or wet.
- Watch for debris such as leaves or loose gravel.
- Weather and traffic conditions on the highway dictate adjusting your speed and driving habits accordingly.

Accessories and Cargo

Harley-Davidson Motor Company cannot test and make specific recommendations concerning every accessory or combination of accessories sold. Therefore, the rider must be responsible for safe operation when installing accessories or carrying extra weight.

⚠WARNING

See the Accessories and Cargo section in your owner's manual. Improper cargo loading or accessory installation can cause component failure and adversely affect stability, handling and performance, which could result in death or serious injury. (00021b)

⚠WARNING

Do not exceed the motorcycle's Gross Vehicle Weight Rating (GVWR) or Gross Axle Weight Rating (GAWR). Exceeding these weight ratings can lead to component failure and adversely affect stability, handling and performance, which could result in death or serious injury. (00016f)

- GVWR is the sum of the weight of the motorcycle, accessories and the maximum weight of the rider, passenger and cargo that can be safely carried.
- GAWR is the maximum amount of weight that can be safely carried on each axle.
- The GVWR and GAWR are shown on the information label which is on the frame downtube in some destinations. Refer to weight tables. See Specifications.

⚠WARNING

Do not pull a trailer with a motorcycle. Pulling a trailer can cause tire overload, damage and failure, reduced braking performance, and adversely affect stability and handling, which could result in death or serious injury. (00018c)

Accessories and Cargo Guidelines

Follow the following guidelines when equipping a motorcycle, carrying passengers and/or cargo.

⚠WARNING

Travel at speeds appropriate for road and conditions and never travel faster than posted speed limit. Excessive speed can cause loss of vehicle control, which could result in death or serious injury. (00008a)

- Do not exceed the legal speed limit or drive too fast for existing conditions. Always reduce speed when poor driving conditions exist. High speed increases the influence of any other condition affecting stability and increases the possibility of loss of control.
- Pay strict attention to road surfaces and wind conditions, and always keep both hands on the handlebar grips when riding. Two-wheeled vehicles are subject to upsetting forces such as wind blasts from passing trucks, holes in the pavement, rough road surfaces, rider control error. These forces may influence the handling characteristics of your motorcycle. If you experience these conditions, reduce speed and guide the motorcycle with a relaxed grip to a controlled condition. Do not brake abruptly or force the handlebar. This may aggravate an unstable condition.
- Keep cargo weight concentrated close to the motorcycle and as low as possible. This position minimizes the change in the motorcycle's center of gravity.
- Distribute weight evenly on both sides of the vehicle.
- Do not load bulky items too far behind the rider or add weight to the handlebars or front forks.
- If equipped, do not exceed maximum specified load in each saddlebag.
- If equipped, do not overload luggage racks. Luggage racks are designed for lightweight items.
- Make sure cargo is secure and will not shift while riding and recheck the cargo periodically. Accessories that change the operator's riding position may increase reaction time and affect handling.
- Extra electrical equipment can overload the motorcycle's electrical system. This overload can result in electrical system and/or component failure.

⚠WARNING

Front and/or rear guard(s) can provide limited leg and cosmetic vehicle protection under unique circumstances. (Fall over while stopped, very slow speed slide.) It is not made or intended to provide protection from bodily injury in a collision with another vehicle or any other object. (00022b)

- Large surfaces such as fairings, windshields, backrests and luggage racks can have an adverse effect on stability and handling.
- Install only Genuine Harley-Davidson accessories designed specifically for your motorcycle.
- Pay particular attention to the weights of accessories, cargo, riding gear, passenger and rider. These weights affect the loading requirements of your motorcycle.

⚠WARNING

Harley-Davidson parts and accessories are designed for Harley-Davidson motorcycles. Using non-Harley-Davidson parts or accessories can adversely affect performance, stability or handling, which could result in death or serious injury. (00001b)

⚠WARNING

Do not add sidecar to this motorcycle. Operating motorcycle with sidecar can cause loss of vehicle control, which could result in death or serious injury. (00590d)

Noise Control System

Tampering

Removal or replacement of any noise control system component may be prohibited by law. This prohibition includes modifications made prior to vehicle sale or delivery to the ultimate purchaser. Use of a vehicle on which noise control system components have been removed or rendered inoperative may also be prohibited by law.

Labels

See Labels. The safety and maintenance labels on your motorcycle indicate compliance to market regulations. Refer to Labels.

NOTE:

Some labels are available in different languages for destinations outside the United States.

If removed or damaged, replacement labels can be purchased. See a Harley-Davidson dealer for all available labels.

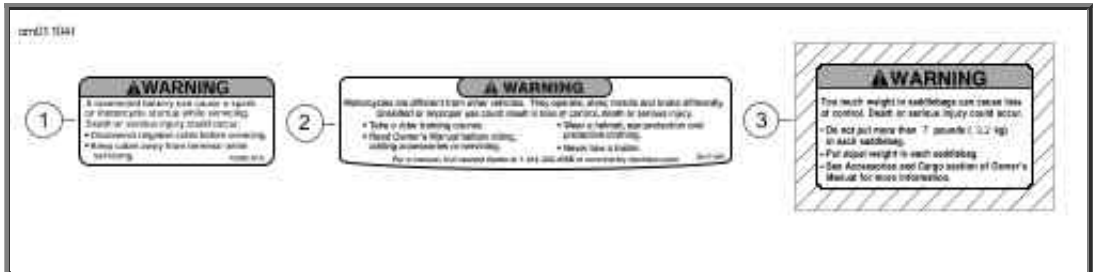

Labels

Labels

LABEL	PART NO.	DESCRIPTION	LOCATION	TEXT
1	15368-01A	Battery warning	On frame under seat	A connected battery can cause a spark or motorcycle startup while servicing. Death or serious injury could occur. • Disconnect negative cable before servicing. • Keep cable away from terminal side while servicing.
2	29147-07	General warnings XL883N, XL1200X XL1200V	Top of air cleaner cover	Motorcycles are different from other vehicles. They operate, steer, handle and brake differently. Unskilled or improper use can result in loss of control, death or serious injury. • Take a rider training course. • Read Owner's Manual before riding, adding accessories or servicing. • Wear a helmet, eye protection and protective clothing. • Never tow a trailer. For a manual, find nearest dealer at 1-414-343-4056 or www.harley-davidson.com.
	29127-95B	General warnings XL883L XL1200C, XL1200CP XL1200CA, XL1200CB XL1200T	Top of air cleaner cover	
3	91494-06	Saddlebag warning XL1200T	Inside saddlebag	Too much weight in saddlebags can cause loss of control. Death or serious injury could occur. • Do not put more than 7 pounds (3 kg) in each saddlebag. • Put equal weight in each saddlebag. • See Accessories and Cargo section of Owner's Manual.

Identification

Vehicle Identification Number (VIN)

General

See Typical Harley-Davidson VIN: 2016 Sportster Models. A unique 17-digit serial or Vehicle Identification Number (VIN) is assigned to each motorcycle. Refer to Harley-Davidson VIN Breakdown: 2016 Sportster Models.

Location

See VIN Locations. The full 17-digit VIN is stamped on the right side of the frame near the steering head. In some destinations, a printed VIN label is also attached on the front downtube.

Abbreviated VIN

An abbreviated VIN showing the vehicle model, engine type, model year, and sequential number is stamped on the left side of the crankcase between the engine cylinders.

NOTE:

Always give the full 17-digit Vehicle Identification Number when ordering parts or making any inquiry about your motorcycle.

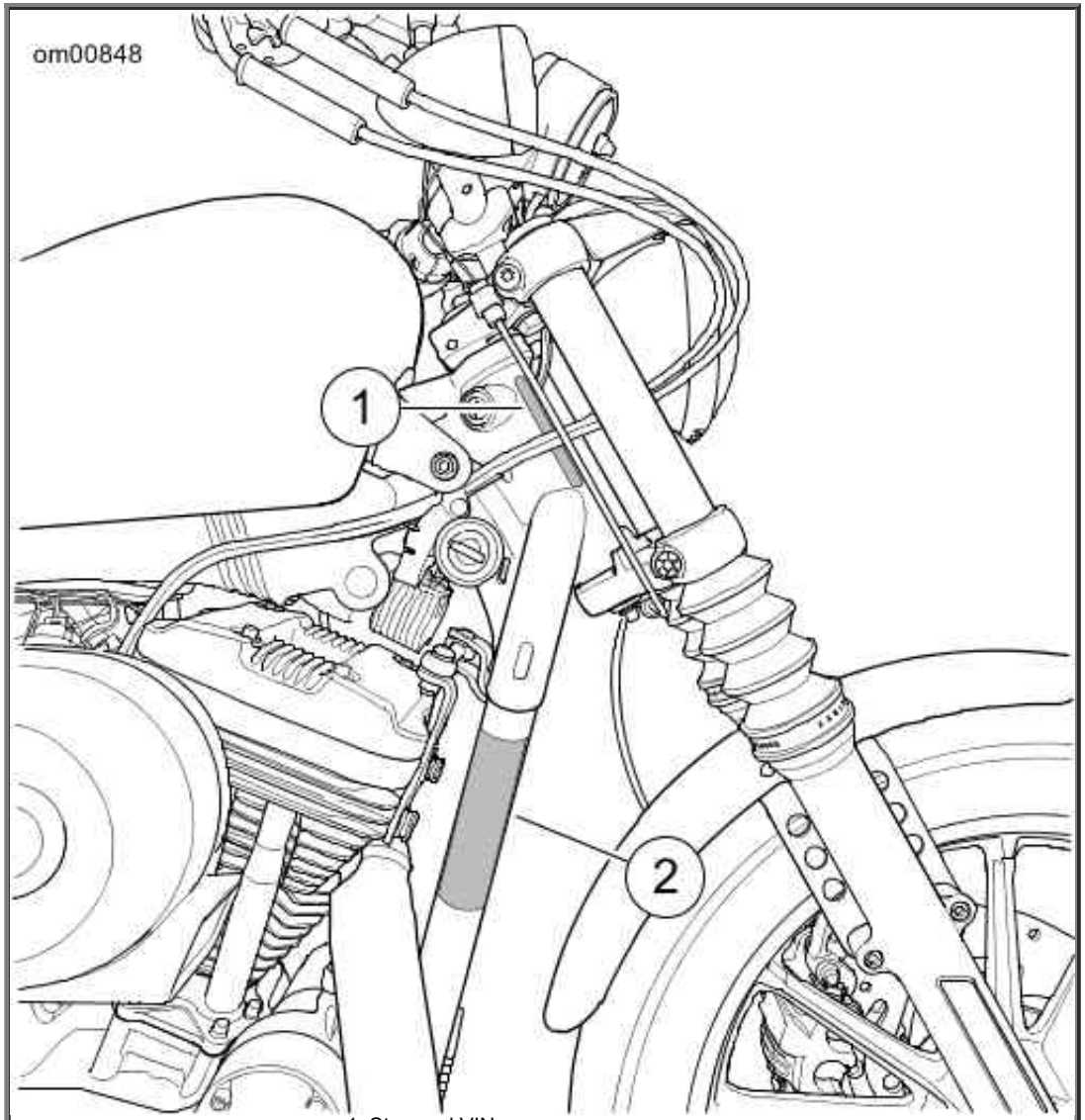

1. Stamped VIN
2. VIN label

VIN Locations

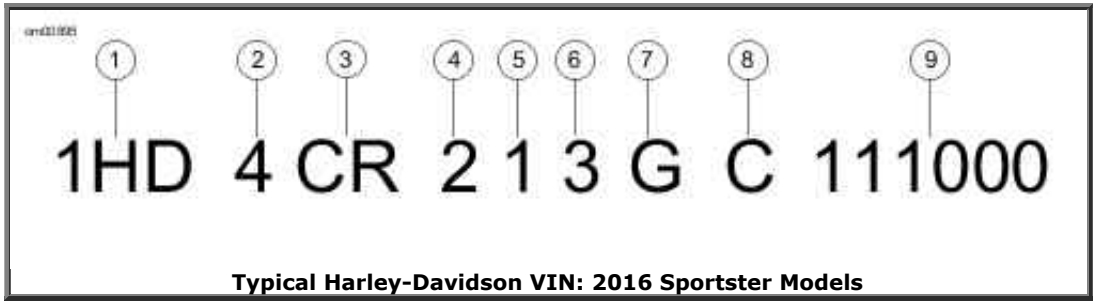

Typical Harley-Davidson VIN: 2016 Sportster Models

Harley-Davidson VIN Breakdown: 2016 Sportster Models

POSITION	DESCRIPTION	POSSIBLE VALUES	
1	World manufacturer identifier	1HD=Originally manufactured in the United States 5HD=Originally manufactured in the United States for sale outside of the United States 932=Originally manufactured in Brazil MEG=Originally manufactured in India	
2	Motorcycle type	1=Heavyweight motorcycle (901 cm^3 or larger) 4=Middleweight motorcycle (351 cm^3 to 900 cm^3)	
3	Model	See VIN model table	
4	Engine type	2=Evolution® 883 cm^3 air-cooled, fuel-injected 3=Evolution® 1202 cm^3 air-cooled, fuel-injected	
5	Configuration/calibration, introduction	**Normal Introduction**	**Mid-year or Special Introduction**
		1=Domestic (DOM)	2, 4=Domestic (DOM)
		3=California (CAL)	5, 6=California (CAL)
		A=Canada (CAN)	B=Canada (CAN)
		C=HDI	D=HDI
		E=Japan (JPN)	F=Japan (JPN)
		G=Australia (AUS)	H=Australia (AUS)
		J=Brazil (BRZ)	K=Brazil (BRZ)
		L=Asia Pacific (APC)	M=Asia Pacific (APC)
		N=India (IND)	P=India (IND)
6	VIN check digit	Can be 0-9 or X	
7	Model year	G=2016	
8	Assembly plant	C=Kansas City, MO U.S.A. D=H-D Brazil-Manaus, Brazil (CKD) N=Haryana India (Bawal District Rewari)	

9	Sequential number	Varies

VIN Model Codes: 2016 Sportster Models

CODE	MODEL	CODE	MODEL
CR	XL883L SuperLow®	LH	XL1200CP 1200 Custom (factory custom)
CT	XL1200C 1200 Custom	LJ	XL1200CA 1200 Custom Limited A
LC	XL1200X Forty-Eight®	LK	XL1200CB 1200 Custom Limited B
LE	XL883N Iron 883™	LL	XL1200T SuperLow® 1200T
LF	XL1200V Seventy-Two®		

Specifications

Specifications

NOTE:

Specifications in this publication may not match those of official certification in some markets due to timing of publication printing, variance in testing methods, and/or vehicle differences. Customers seeking officially recognized regulatory specifications for their vehicle should refer to certification documents and/or contact their respective dealer or distributor.

Transmission

TRANSMISSION	SPECIFICATION
Type	Constant mesh, foot shift
Speeds	5 forward

Engine

ITEM	XL883 MODELS		XL1200 MODELS	
Number of cylinders	2			
Type	4-cycle, 45 degree, V-twin, air cooled			
Compression ratio	9:1		10:1	
Bore	3.000 in	76.2 mm	3.500 in	88.9 mm
Stroke	3.811 in	96.8 mm	3.811 in	96.8 mm

Displacement	53.9 in^3	883 cm^3	73.4 in^3	1202 cm^3

Electrical

COMPONENT	SPECIFICATION	
Ignition timing	Not adjustable	
Battery	12 V, 225 CCA, 12 Ah, sealed and maintenance free	
Charging system	Single-phase, 30 A system (357 W @ 13.5 V, 2000 rpm, 405 W max power @ 13.5 V)	
Spark plug size	12 mm	
Spark plug gap	0.038-0.043 in	0.97-1.09 mm
Spark plug torque	12-18 ft-lbs	16.3-24.4 Nm

Sprocket Teeth

DRIVE	ITEM	XL883 MODELS		XL1200 MODELS	
		U.S.	WORLD	U.S.	WORLD
Primary	Engine	34	34	38	38
	Clutch	57	57	57	57
Final	Transmission	29	29	29	30
	Rear wheel	68	68	68	68

Overall Drive Ratios

GEAR	XL883 MODELS	XL1200 MODELS	
	ALL	U.S.	WORLD
First	10.407	9.315	9.004
Second	7.436	6.653	6.432
Third	5.531	4.948	4.783
Fourth	4.584	4.102	3.965
Fifth	3.931	3.517	3.400

Dimensions: XL883 Models

ITEM	XL883L		XL883N	
	in	mm	in	mm
Length	87.6	2225	85.8	2180
Overall width	33.3	845	33.5	850
Overall height	44.7	1135	44.1	1120
Wheel base	59.1	1500	59.6	1515
Road clearance	3.9	100	4.3	110
Seat height *	25.5	648	25.7	653
* With 180 lb 81.7 kg rider on seat.				

Dimensions: XL1200 Models

ITEM	XL1200C		XL1200CP*		XL1200CA		XL1200CB		XL1200T		XL1200X		XL1200V	
	in	mm	in	mm	in	mm	in	mm	in	mm	in	mm	in	mm
Length	87.6	2225	87.6	2225	87.6	2225	87.6	2225	87.6	2224	85.0	2159	89.6	2275
Overall width	33.1	840	33.1	840	32.3	820	37.0	940	33.7	856	33.3	845	36.2	920
Overall height	45.3	1150	45.3	1150	43.1	1095	48.2	1225	51.9	1319	42.7	1085	49.8	1265
Wheelbase	60.2	1530	60.2	1530	60.2	1530	60.2	1530	59.1	1500	59.3	1506	60.6	1540
Road clearance	4.3	110	4.3	110	4.3	110	4.3	110	4.2	107	3.9	100	5.2	132
Seat height **	26.6	676	26.6	676	26.6	676	26.6	676	26.1	664	26.2	666	26.9	683
* Dimensions vary for factory customized motorcycles. ** With 180 lb 81.7 kg rider on seat.														

⚠WARNING

Do not exceed the motorcycle's Gross Vehicle Weight Rating (GVWR) or Gross Axle Weight Rating (GAWR). Exceeding these weight ratings can lead to component failure and adversely affect stability, handling and performance, which could result in death or serious injury. (00016f)

- GVWR is the sum of the weight of the motorcycle, accessories and the maximum weight of the rider, passenger and cargo that can be safely carried.
- GAWR is the maximum amount of weight that can be safely carried on each axle.
- GVWR and GAWR are shown on the information plate, on the frame downtube.

NOTE:

The maximum additional weight allowed equals the Gross Vehicle Weight Rating (GVWR) minus the running weight. For example, a motorcycle with GVWR of 1200 lb 544 kg having a running weight of 800 lb 363 kg , would allow a maximum of an extra 400 lb 181 kg combined weight of the rider, passenger, riding gear, cargo and installed accessories.

Weights: XL883 Models

ITEM	XL883L		XL883N	
	lb	kg	lb	kg
Running weight *	565	256	562	255
Maximum added weight allowed **	435	198	438	199
GVWR	1000	454	1000	454
GAWR front	339	154	335	152
GAWR rear	661	300	665	302

* The total weight of the motorcycle as delivered with all oil/fluids and approximately 90% of fuel.

** The total weight of accessories, cargo, riding gear, passenger and rider must not exceed this weight.

Weights: XL1200 Models

ITEM	XL1200C		XL1200CP *		XL1200CA		XL1200CB		XL1200T		XL1200X		XL1200V	
	lb	kg	lb	kg	lb	kg	lb	kg	lb	kg	lb	kg	lb	kg
Running weight **	587	266	587	266	591	268	599	272	599	272	551	250	559	253
Maximum added weight allowed ***	413	188	413	188	409	186	401	184	403	183	449	204	441	200
GVWR	1000	454	1000	454	1000	454	1000	454	1002	455	1000	454	1000	454
GAWR, front	335	152	335	152	335	152	335	152	340	154	335	152	335	152
GAWR, rear	665	302	665	302	665	302	665	302	663	301	665	302	665	302

* Weights vary for factory customized motorcycles.

** Total weight as delivered with all oil/fluids and approximately 90% of fuel.

*** The total weight of accessories, cargo, riding gear, passenger and rider must not exceed this weight.

Capacities: XL883 Models

ITEM	XL883L		XL883N	
	U.S.	L	U.S.	L
Fuel tank (total)	4.5 gal	17.0	3.3 gal	12.5
Oil tank with filter	2.8 qt	2.6	2.8 qt	2.6
Transmission (approximate)	1.0 qt	0.95	1.0 qt	0.95
Low fuel warning light	1.0 gal	3.8	0.8 gal	3.0

Capacities: XL1200 Models

ITEM	XL1200C		XL1200CP		XL1200CA		XL1200CB		XL1200T		XL1200V		XL1200X	
	U.S.	L	U.S.	L	U.S.	L	U.S.	L	U.S.	L	U.S.	L	U.S.	L
Fuel tank (total)	4.5 gal	17.0	4.5 gal	17.0	4.5 gal	17.0	4.5 gal	17.0	4.5 gal	17.0	2.1 gal	7.9	2.1 gal	7.9
Oil tank with filter	2.8 qt	2.6	2.8 qt	2.6	2.8 qt	2.6	2.8 qt	2.6	2.8 qt	2.6	2.8 qt	2.6	2.8 qt	2.6
Transmission (approximate)	1.0 qt	0.95	1.0 qt	0.95	1.0 qt	0.95	1.0 qt	0.95	1.0 qt	0.95	1.0 qt	0.95	1.0 qt	0.95
Low fuel warning light	1.0 gal	3.8	1.0 gal	3.8	1.0 gal	3.8	1.0 gal	3.8 L	1.0 gal	3.8	0.65 gal	2.5	0.65 gal	2.5

Specified Tires

MODEL	MOUNT	DIAMETER	SPECIFIED TIRE	PRESSURE (cold)	
		in		psi	kPa
XL883L	front	18	Michelin Scorcher "11F" 120/70ZR18	36	248
	rear	17	Michelin Scorcher "11" 150/60ZR17	42	290
XL883N	front	19	Michelin Scorcher "31" 100/90B19	30	207
	rear	16	Michelin Scorcher "31" 150/80B16	40	276
XL1200C	front	16	Michelin Scorcher "31" 130/90-16	36	248
	rear	16	Michelin Scorcher "31" 150/80B16	40	276
XL1200CP XL1200CA XL1200CB	front	16	Michelin Scorcher "31" 130/90B16	36	248
	rear	16	Michelin Scorcher "31" 150/80B16	40	276
XL1200T	front	18	Michelin Scorcher "11T" 120/70ZR18	36	248
	rear	17	Michelin Scorcher "11T" 150/70ZR17	42	290
XL1200V	front	21	Dunlop D402F MH90-21	30	207
	rear	16	Dunlop D401 150/80B16	40	276
XL1200X	front	16	Michelin Scorcher "31" 130/90B16	36	248
	rear	16	Michelin Scorcher "31" 150/80B16	40	276

Tire Data

⚠WARNING

Match tires, tubes, rim strips or seals, air valves and caps to the correct wheel. Contact a Harley-Davidson dealer. Mismatching can lead to tire damage, allow tire slippage on the wheel or cause tire failure, which could result in death or serious injury. (00023c)

⚠WARNING

Only install original equipment tire valves and valve caps. A valve, or valve and cap combination, that is too long or too heavy can strike adjacent components and damage the valve, causing rapid tire deflation. Rapid tire deflation can cause loss of vehicle control, which could result in death or serious injury. (00281a)

⚠WARNING

Use only Harley-Davidson specified tires. See a Harley-Davidson dealer. Using non-specified tires can adversely affect stability, handling or braking, which could result in death or serious injury. (00024b)

Refer to Specified Tires for specified tires and recommended pressures.

Tubeless tires fitted with the correct size inner tubes may be used on Harley-Davidson laced (wire spoked) wheels. Install a **new** rim strip and correct size inner tube each time a new tire is installed on a laced wheel.

⚠WARNING

Harley-Davidson front and rear tires are not the same. Interchanging front and rear tires can cause tire failure, which could result in death or serious injury. (00026a)

⚠WARNING

Be sure tires are properly inflated, balanced, undamaged, and have adequate tread. Inspect your tires regularly and see a Harley-Davidson dealer for replacements. Riding with excessively worn, unbalanced, improperly inflated, overloaded or damaged tires can lead to tire failure and adversely affect stability and handling, which could result in death or serious injury. (00014b)

Always maintain proper tire pressure as specified in Specified Tires. Do not load tires beyond GAWR specified in Weights: XL883 Models. Under-inflated, over-inflated or overloaded tires can fail.

⚠WARNING

Replace tire immediately with a Harley-Davidson specified tire when wear bars become visible

Replace tire immediately with a Harley-Davidson specified tire when wear bars become visible or only 1/32 in (0.8 mm) tread depth remains. Riding with a worn tire could result in death or serious injury. (00090c)

⚠WARNING

Do not use liquid tire balancers or sealants in aluminum wheels. Using liquid tire balancers or sealants can cause rapid corrosion of the rim surface, which could cause tire deflation. Tire deflation can cause loss of vehicle control, which could result in death or serious injury. (00631b)

Harley-Davidson tires have wear bars that run horizontally across the tread. When a tire is worn to the point that the wear bars are visible, or 1/32 in 0.8 mm tread depth remains, the tire can:

- Be more easily damaged leading to tire failure.
- Provide reduced traction.
- Adversely affect stability and handling.

Harley-Davidson does not perform any testing with only nitrogen in tires. Harley-Davidson neither recommends nor discourages the use of pure nitrogen to inflate tires.

India Tire Compliance Statement: Harley-Davidson Motor Company declares that the tires listed in the specifications section (India Only) meet the Indian Standard 15627 requirement of the Bureau of Indian Standards (as amended from time to time) required for registration of vehicles assembled/manufactured in India. These tires also comply with the Central Motor Vehicle Rules requirements, 1989.

Gasoline Blends

Your motorcycle was designed to get the best performance and efficiency using unleaded gasoline. Most gasoline is blended with alcohol and/or ether to create oxygenated blends. The type and amount of alcohol or ether added to the fuel is important.

CAUTION

Do not use gasoline that contains methanol. Doing so can result in fuel system component failure, engine damage and/or equipment malfunction. (00148a)

- Gasoline/METHYL TERTIARY BUTYL ETHER (MTBE) blends are a mixture of gasoline and as much as 15 percent MTBE. Gasoline/MTBE blends use in your motorcycle is approved.
- ETHANOL fuel is a mixture of ethanol (grain alcohol) and unleaded gasoline and can have an impact on fuel mileage. Fuels with an ethanol content of up to 10 percent may be used in your motorcycle without affecting vehicle performance. U.S. EPA regulations currently indicate that fuels with 15 percent ethanol (E15) are restricted from use in motorcycles at the time of this publication. Some motorcycles are calibrated to operate with higher ethanol concentrations to meet the fuel standards in certain countries.
- REFORMULATED OR OXYGENATED GASOLINES (RFG) describes gasoline blends that are specifically designed to burn cleaner than other types of gasoline. This results in fewer tailpipe emissions. They are also formulated to evaporate less when filling the tank. Reformulated gasolines use additives to oxygenate the gas. Your motorcycle will run normally using this type of fuel. Harley-Davidson recommends using it whenever possible as an aid to cleaner air in our environment.
- Do not use racing fuel or fuel containing methanol. Use of these fuels will damage the fuel system.
- Using fuel additives other than those approved for use by Harley-Davidson may damage the engine, fuel system and other components.

Some gasoline blends might adversely affect starting, driveability or fuel efficiency. If any of these problems are experienced, try a different brand of gasoline

or gasoline with a higher octane blend.

Fuel

Always use a good quality unleaded gasoline. Octane ratings are usually found on the pump. Refer to Octane Ratings.

WARNING

Avoid spills. Slowly remove filler cap. Do not fill above bottom of filler neck insert, leaving air space for fuel expansion. Secure filler cap after refueling. Gasoline is extremely flammable and highly explosive, which could result in death or serious injury. (00028a)

WARNING

Use care when refueling. Pressurized air in fuel tank can force gasoline to escape through filler tube. Gasoline is extremely flammable and highly explosive, which could result in death or serious injury. (00029a)

Modern service station pumps dispense a high flow of gasoline into a motorcycle fuel tank. This can cause air entrapment and pressurization.

Octane Ratings

SPECIFICATION	RATING
Pump Octane (R+M)/2	91 (95 RON)

Catalytic Converters

Certain market Sportster model motorcycles have catalytic converters.

CAUTION

Do not operate catalytic converter-equipped vehicle with engine misfire. If you operate the vehicle under this condition, the exhaust will become abnormally hot, which can cause vehicle damage, including emission control loss. (00149c)

CAUTION

Use only unleaded fuel in catalytic converter-equipped motorcycles. Using leaded fuel will damage the emission control system. (00150b)

Controls and Indicators

General: Controls and Indicators

WARNING

Read the CONTROLS AND INDICATORS section before riding your motorcycle. Failure to understand the operation of the motorcycle could result in death or serious injury. (00043a)

Some features explained are unique to certain models. These features may be available as accessories for your Harley-Davidson motorcycle. See a Harley-Davidson dealer for a complete list of accessories that will fit your specific motorcycle.

Keyed Ignition

WARNING

The automatic-on headlamp feature provides increased visibility of the rider to other motorists. Be sure headlamp is on at all times. Poor visibility of rider to other motorists can result in death or serious injury. (00030b)

See Ignition Switch: Sportster Models. The ignition switch controls electrical functions of the motorcycle. The switch is located on the right side of the steering head. Refer to Ignition Switch.

Turn the key to the OFF position and remove key when the motorcycle is not in operation. The key may also be removed in the ACC position.

NOTES:

- *Write the key number in the space provided at the front of this manual.*
- *The lamps work when the switch is in the IGNITION position, as required by law in some localities.*

WARNING

Do not operate vehicle with forks locked. Locking the forks restricts the vehicle's turning ability, which could result in death or serious injury. (00035a)

CAUTION

Protect your vehicle against theft. Failure to lock the motorcycle after parking could result in

theft and/or equipment damage. (00151b)

CAUTION

Do not lubricate barrel locks with petroleum based lubricants or graphite. Inoperative locks may result. (00152a)

CAUTION

Turn the ignition switch to the OFF position before locking the motorcycle. Leaving the switch in the ACC position will keep the instrument lights on and result in a discharged battery. (00492b)

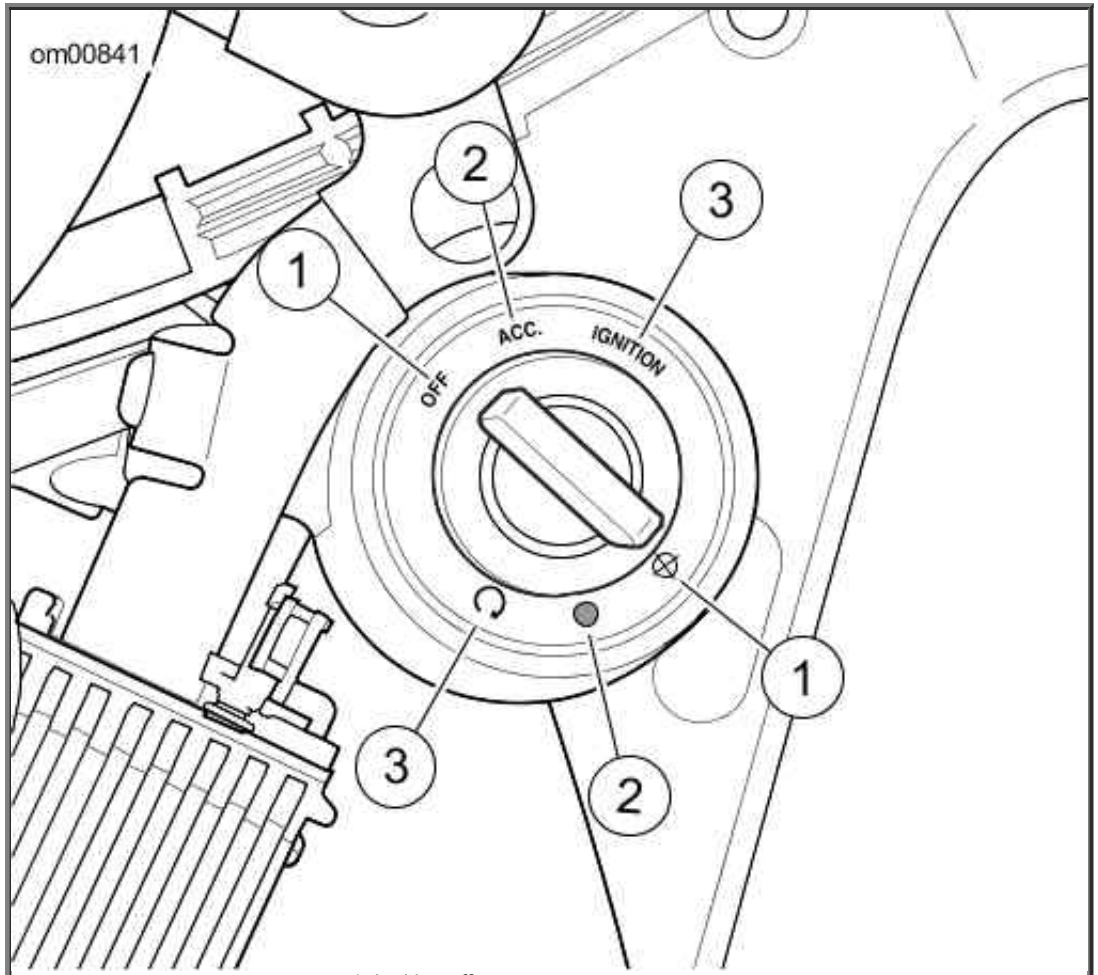

1. Ignition off
2. Accessory on
3. Ignition on

Ignition Switch: Sportster Models

Ignition Switch

POSITION	FUNCTION
OFF	Ignition and lamps are off. Key can be removed.
ACC.*	Instrument lamps are on. Brake lamp and horn can be activated. Key can be removed.
IGNITION	Ignition and lamps are on.
*International models: Position and tail lamps are also on.	

Keyless Ignition

⚠WARNING

The automatic-on headlamp feature provides increased visibility of the rider to other motorists. Be sure headlamp is on at all times. Poor visibility of rider to other motorists can result in death or serious injury. (00030b)

⚠WARNING

Do not operate vehicle with forks locked. Locking the forks restricts the vehicle's turning ability, which could result in death or serious injury. (00035a)

A Motorcycle with a keyless ignition does not require a key for operation. Instead, an assigned security fob must be present or the PIN must be used before the motorcycle can be started.

The key supplied with the motorcycle is for the fork lock. See Fork Lock.

Ignition Mode

With security fob present, set the OFF/RUN switch to RUN. The lights and instruments become operational and the motor can be started. To disarm the security system using the PIN, see Arming and Disarming.

The motorcycle remains on (or the engine continues running) until the OFF/RUN switch is set to OFF. Taking the security fob out of range will not shut down the engine or turn off the motorcycle after it is turned on. However, the speedometer will display a NO FOB message if the motorcycle begins moving without the fob present.

NOTE:

With the OFF/RUN switch in RUN, the system will turn off after 15 minutes of inactivity.

When parked, set the OFF/RUN switch to OFF and take the security fob from the motorcycle to prevent theft or startup. With the motorcycle turned off and the security fob out of range, the starter, ignition system and OFF/RUN switch remain disabled, immobilizing the motorcycle.

Accessory Mode

See Left Hand Switch Module. With the security fob present, press and hold the TRIP switch (1). The instruments and accessory circuit are powered. The headlamp and turn signal lamps remain off. While in accessory mode:

- The speedometer displays the odometer functions.
- The headlamp can be activated by pressing the headlamp flash to pass switch.
- The stop lamps can be operated.
- The license plate lamp illuminates.

To turn off accessory mode, press and hold the TRIP switch.

Do not leave the motorcycle in accessory mode for an extended period. This can discharge the battery. If the vehicle is left in accessory mode for two hours, the vehicle will automatically shut off to prevent complete battery discharge. To resume accessory mode, press and hold the TRIP switch.

Primary Controls

Clutch Hand Lever

⚠WARNING

Do not position fingers between hand control lever and handlebar grip. Improper hand positioning can impair control lever operation and cause loss of vehicle control, which could result in death or serious injury. (00032a)

The clutch hand lever is located on the left handlebar and is operated with the fingers of the left hand.

A clutch switch is incorporated into the left handlebar switch assembly. It enables the rider to start the vehicle in any gear (or in neutral) as long as the clutch lever is pulled in. If the clutch is not disengaged and the vehicle is in gear, the vehicle will not start.

Gear Shift Lever

The gear shift lever is located in front of the left rider footrest. The gear shift is operated with the left foot.

Neutral is found between first and second gear in a five speed shift pattern. See Shifting Gears.

Front Brake Lever

The front brake lever operates the front brake. Operate the hand lever with the fingers of the right hand. See Brake System.

Throttle Control Grip

The throttle control grip is located on the right handlebar control and is operated with the right hand.

To reduce rider fatigue on long trips, a spring-loaded throttle friction adjustment screw (10) is located at the bottom of the throttle grip clamp on non-cruise equipped models.

1. Slowly turn throttle control grip clockwise (toward the front) to close the throttle (decelerate).
2. Slowly turn throttle control grip counterclockwise (toward rear of motorcycle) to open the throttle (accelerate).

⚠WARNING

Do not tighten throttle friction adjustment screw to the point where the engine will not return to idle automatically. Over-tightening can lead to loss of vehicle control, which could result in death or serious injury. (00031b)

3. Loosen the throttle friction adjustment screw so the throttle returns to the idle position when the hand is removed from the grip.

   NOTE:

   The throttle adjustment screw should not be used under normal stop and go operating conditions.

4. Screw the throttle adjustment screw in to increase friction on the grip. This friction provides a damping effect on throttle motion.

Rear Brake Pedal

The rear brake pedal operates the brake on the rear wheel. Operate the rear brake pedal with the right foot. See Brake System.

Left Hand Control Switches

Trip

The TRIP switch activates the trip odometers and is used to activate the odometer display to scroll through the optional screens. With the ignition off, the TRIP switch can activate time or odometer displays. Refer to Left Hand Control Switches.

Horn

See Left Hand Switch Module. The horn is operated by pressing on the HORN switch. The horn can be activated for up to 10 seconds at a time. If the HORN switch is held for a longer period, the horn will automatically deactivate. Refer to Left Hand Control Switches.

High Beam

See Left Hand Switch Module. Press the high beam switch to activate the high beam. The (blue) high beam indicator lamp is lit when the high beam is on. Refer to Left Hand Control Switches.

Low Beam/Flash to Pass

Low beam: See Left Hand Switch Module. Press the bottom of the switch to activate the low beam.

Flash to pass: When the low beam switch is on, press and release the flash to pass switch to flash the high beam before passing another vehicle. The high beam indicator lamp in the speedometer face is illuminated as long as the flash to pass switch is pressed.

When in accessory, press the flash to pass switch to activate the headlamp. Refer to Left Hand Control Switches.

Left Turn Signal

Activate: See Left Hand Switch Module. Press the left turn signal switch to activate the left turn signal. Refer to Left Hand Control Switches.

Cancel: Press the left turn signal switch to cancel the left turn signal. For detailed operation, see Turn Signal Switch Operation.

NOTE:

Front turn signal lamps also function as running lamps. This feature may not be available in all markets.

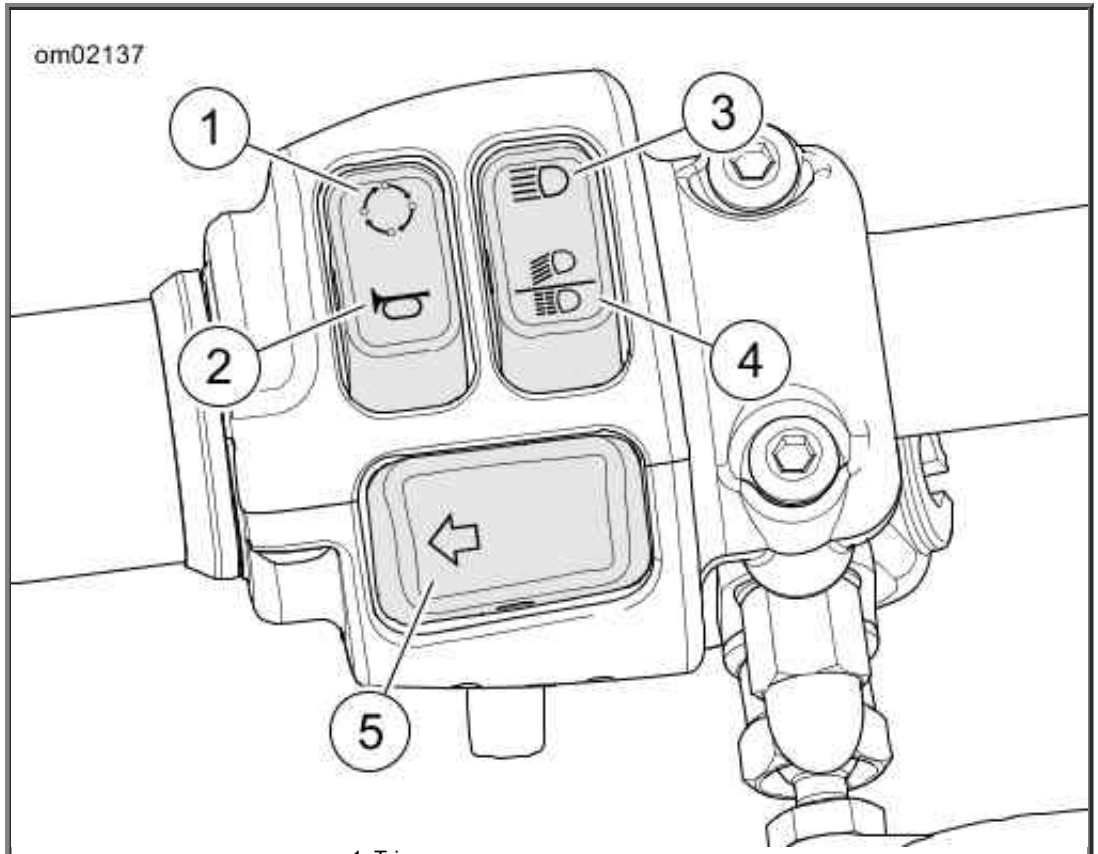

1. Trip
2. Horn
3. High beam
4. Low beam/flash to pass
5. Left turn signal

Left Hand Switch Module

Left Hand Control Switches

SWITCH	NAME	FUNCTION
	Trip	Press the switch to alternate odometer displays.
	Horn	Press the switch to sound the horn.
	High beam	Press the switch to switch the headlamp to high beam.
	Low beam/ flash to pass	Press the switch to switch the headlamp to low beam. Press and release to flash the high beam. In ACC, press to activate the headlamp.
	Left turn	Press the switch to activate the left turn signal.

Right Hand Control Switches

Hazard Warning 4-Way Flasher

See Right Hand Control Module. This switch is used to allow a stranded motorcycle to be left in the 4-way flashing mode. With the flashers, the motorcycle can be left with the ignition locked until help is found. Refer to Right Hand Control Switches.

1. With the ignition switch in the IGNITION or ACC position, press on the hazard warning triangle to activate the 4-way flashers.

   NOTE:

   Security models: *The fob must be present when turning on the 4-way flashers and when canceling the flashers.*

2. Turn ignition off. The 4-way flashers continue for 2 hours or until cancelled by the rider.
3. To cancel, turn the ignition to ACC or IGNITION. Press the warning triangle above the start switch.

Start

See Right Hand Control Module. The start switch is on the right handlebar control module. Refer to Right Hand Control Switches.

1. Switch the OFF/RUN switch to the RUN position. Shift the transmission to neutral. The neutral (green) indicator should be illuminated. See Starting the Engine.
2. Turn the ignition switch to IGNITION. Press the start switch to operate the starter motor.

   NOTES:
   - *When the starter is activated, the headlamp is momentarily turned off to reduce battery load.*
   - *If the engine does not start, the starter motor runs for five seconds and then stops. Release the start switch. Press the start switch to try again. After several unsuccessful attempts to start the engine, see a Harley-Davidson dealer.*

Engine Off

See Right Hand Control Module. Press the engine OFF switch to shut off the engine. Refer to Right Hand Control Switches.

After turning off the engine. Turn the ignition switch to OFF to disconnect the electric power.

Engine Run

See Right Hand Control Module. Push the engine RUN switch to enable engine start and run. The engine OFF/RUN switch must be in the RUN position to start or operate the engine. Refer to Right Hand Control Switches.

Right Turn Signal

Activate: See Right Hand Control Module. Press the right turn signal switch to activate the right turn signal. Refer to Right Hand Control Switches.

Cancel: Press the right turn signal switch to cancel the right turn signal. For detailed operation, see Turn Signal Switch Operation.

NOTE:

Front turn signal lamps also function as running lamps. This feature may not be available in all markets.

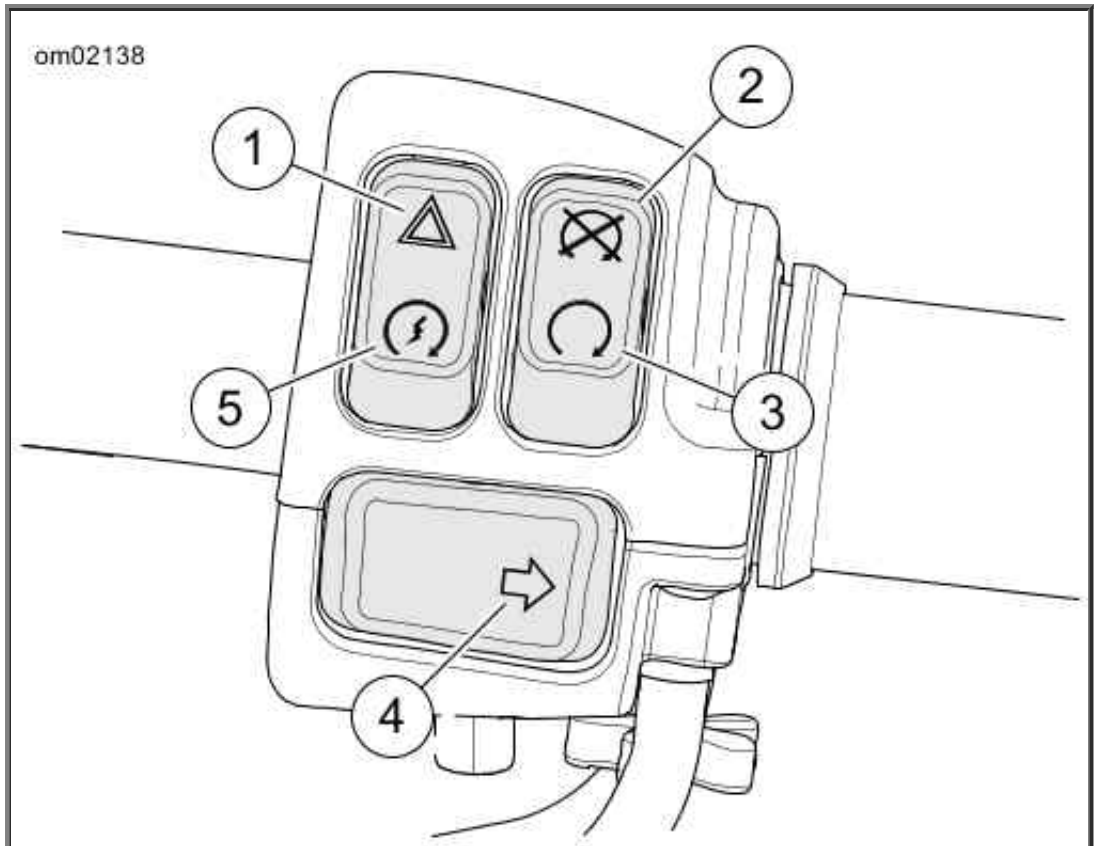

1. Hazard
2. Off
3. Run
4. Left turn signal
5. Start

Right Hand Control Module

Right Hand Control Switches

SWITCH	NAME	FUNCTION

	Hazard	Press the switch to activate the 4-way flashers.
	Start	Press the switch to start the engine.
	Off	Press the switch to the off position to stop the engine or to prevent the engine from starting.
	Run	Press the switch to the run position to allow the engine to run.
	Right turn	Press the switch to signal a right turn.

Turn Signal Switch Operation

Operating

Press and release the left or right turn signal switch to activate the turn signal lamps. The lamps flash until they are automatically canceled or manually canceled by the rider.

NOTE:

If a turn signal indicator flashes rapidly, a turn signal is not operating. Exercise caution. Use hand signals. Immediately replace defective components.

Automatic Canceling

The turn signal lamps automatically cancel when a full turn has been detected based on speed, acceleration and turn completion.

The lamps also cancel if the turn signal has been activated for a prolonged period (20 flashes) while the motorcycle speed is greater than 7 mph 11 km/h . If the motorcycle is stopped or moving slower than this speed, the turn signal continues flashing.

Manual Canceling

To cancel the turn signal, press and release the turn signal switch a second time.

To activate the opposite turn signal, press and release the turn signal switch for the new direction. The first turn signal cancels and the opposite turn signal lamps begin flashing.

Instruments

Speedometer

⚠WARNING

Travel at speeds appropriate for road and conditions and never travel faster than posted speed limit. Excessive speed can cause loss of vehicle control, which could result in death or serious injury. (00008a)

See Instruments. The speedometer (1) registers miles per hour (U.S. models only), kilometers per hour (international models only) or in certain markets, displays both MPH and km/h.

The instrument backlight activates after a slight delay. The backlight may change briefly when ambient lighting changes (such as going through a tunnel).

Odometer

See Instruments. The odometer window (2) is located in the speedometer face.

Keyed ignition: The ignition switch must be in the ACC or IGNITION position.

Keyless ignition: With an assigned fob within range, turn the OFF/RUN switch to RUN.

The odometer window provides the following selectable displays:

- Odometer
- Trip odometer A
- Trip odometer B
- Time
- Gear number and tachometer

Press and release the TRIP switch to cycle through the displays.

Changing Units of Measurement

With odometer displayed, press and hold the TRIP switch until the units change to MI or KM. All odometer functions will display the selected unit.

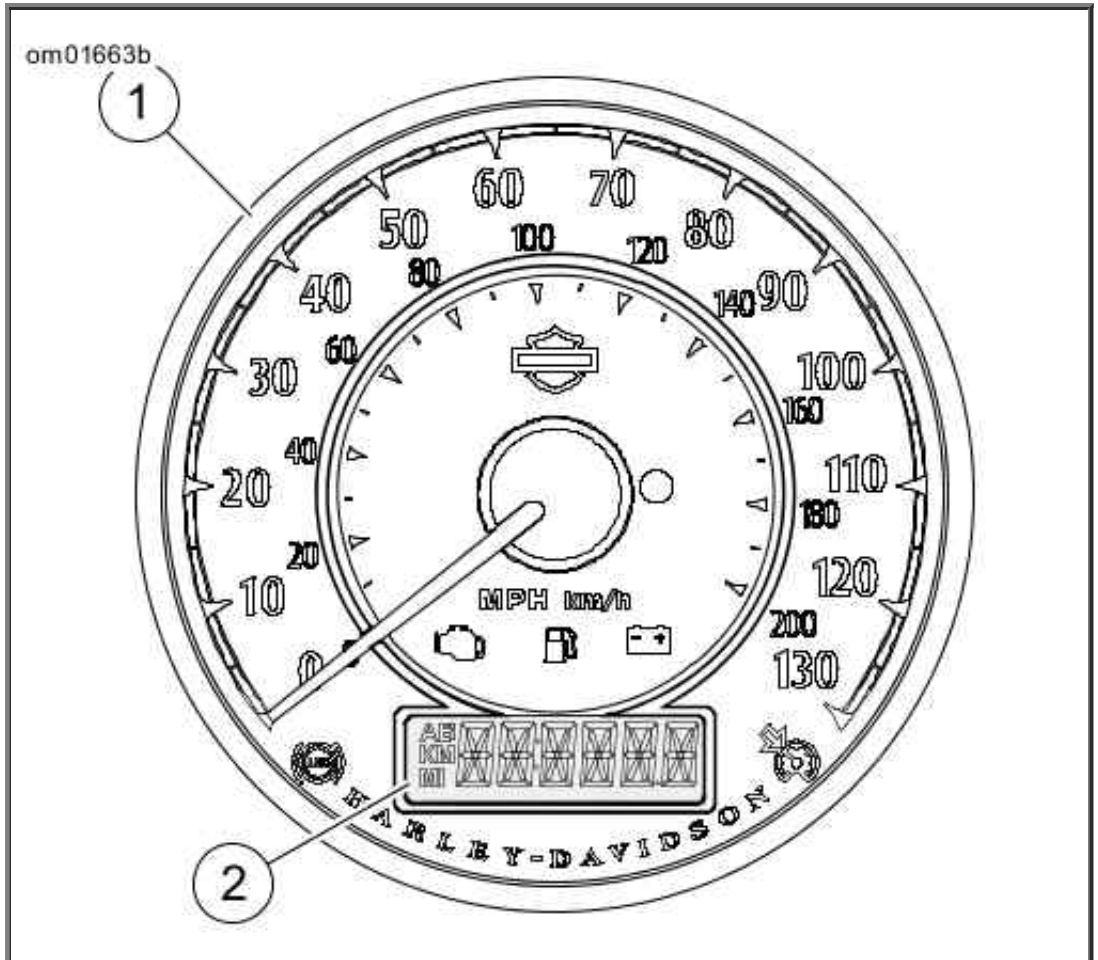

1. Speedometer
2. Odometer

Instruments

Trip Odometers A and B

See Trip Odometers, Gear Indicator and RPM. To check mileage or to reset trip odometers, press and release the TRIP switch (1) to display either the A (2) or B (3) trip odometer. An A or B in the upper left of the display window identifies the trip odometer.

To reset trip odometers, select the A or B odometer. Press the TRIP switch and hold for approximately three seconds. The trip odometer resets to zero.

Gear Selection/Tachometer

See Trip Odometers, Gear Indicator and RPM. Press and release the TRIP switch (1) to cycle through the odometer displays to select the gear number and the tachometer display (4). The odometer shows the current gear (1-5) and the engine speed in revolutions per minute (rpm).

When the transmission is in neutral or the clutch lever is pulled in, the gear number is blank.

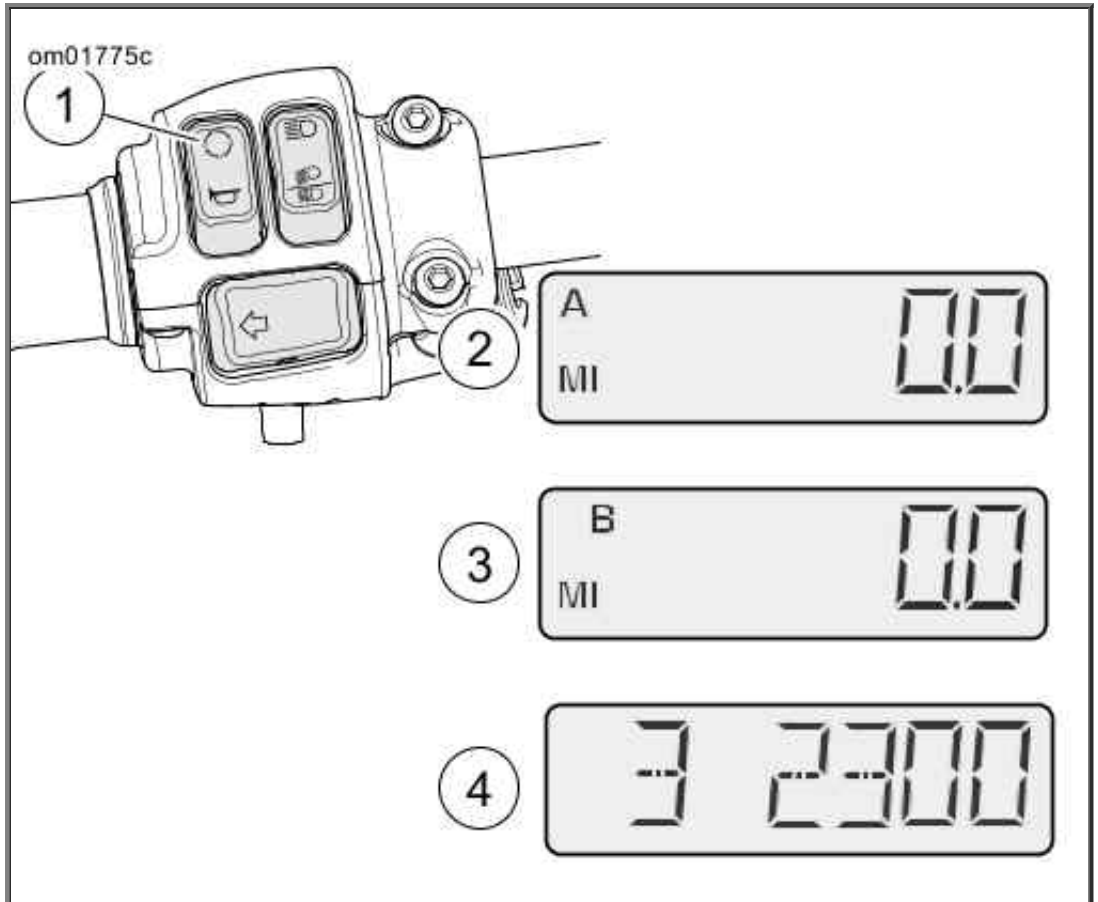

1. Trip switch
2. Trip odometer A
3. Trip odometer B
4. Gear and rpm

Trip Odometers, Gear Indicator and RPM

Time

Press and release the TRIP switch to cycle through the odometer window displays to the time display. To set the time:

1. See Time Displays. Press and release the TRIP switch (1) until time (hour and minutes) is displayed. Press and hold the TRIP switch until 12h (2) begins to blink

in the speedometer display window. Release the switch.

2. Press and release the TRIP switch once to advance to a blinking 24h or military style time display. Each time you press and release the switch, the display switches between 12h and 24h.
3. When the desired time style is displayed, press and hold the TRIP switch until the hours display (3) is blinking.
4. Press and release the TRIP switch repeatedly to advance the hours.
5. When the correct hour is displayed, press and hold the TRIP switch until the minutes display (4) starts blinking.
6. Press and release the TRIP switch repeatedly to advance the minutes display.
7. When the correct minutes are displayed (5), press and hold the TRIP switch until the display advances to AM or PM (6).

   NOTE:

   AM or PM does not appear in the regular time display. The motorcycle uses the selection for diagnostic purposes.

8. In the 12h display, AM or PM flashes. Select AM or PM with the TRIP switch and press and hold the switch for five seconds.
9. Turn the OFF/RUN switch to OFF.

1. Trip switch
2. 12 hour or 24 hour
3. Hour select
4. Minute select
5. Hour and minutes set
6. AM or PM

Time Displays

Tip Message

WARNING

If tip occurs, check all controls for proper operation. Restricted control movement can adversely affect the performance of the brakes, clutch or ability to shift, which could result in loss of vehicle control and death or serious injury. (00350a)

See tIP, NO FOB and SidEStAnd. Should motorcycle be tipped over, the word "tIP" (1) appears in the odometer window. The engine does not start until reset.

Keyed reset: To reset, set the motorcycle upright and turn the ignition switch OFF-IGNITION.

Keyless reset: To reset, set the motorcycle upright and turn the OFF/RUN switch OFF-RUN.

No Fob Message

See tIP, NO FOB and SidEStAnd. If the motorcycle is equipped with a security system and is driven off leaving the fob behind, "NO FOB" (2) is displayed in the odometer window as the motorcycle starts moving. The display lasts for 10 seconds as a reminder to retrieve the fob.

With the motorcycle separated from its assigned fob, the motorcycle can only be started with a manual PIN entry to disarm the security system. See Arming and Disarming.

Sidestand Message

See tIP, NO FOB and SidEStAnd. On international (HDI) models, if the motorcycle is placed into gear while the jiffy stand is down a 'SidEstAnd' (3) message is displayed. See Jiffy Stand Interlock: International Models.

1. Tip over
2. No fob
3. Jiffy stand down

tIP, NO FOB and SidEStAnd

Instrument Lamps

See Instrument Lamps. Warning lamps are in the instrument face.

Check Engine

The check engine lamp (1) indicates whether the engine/engine management system is operating normally. The engine lamp color is amber.

The check engine lamp normally comes on when the ignition is first turned on and remains on for approximately 4 seconds, as the engine management system runs a series of self-diagnostics.

If the check engine lamp comes on at any other time, see a Harley-Davidson dealer.

Low Fuel

The low fuel lamp (2) indicates when fuel falls below the reserve level in the fuel tank. The low fuel lamp color is amber. Refer to Capacities: XL883 Models.

The low fuel lamp will not turn off until there is sufficient fuel in the tank, the ignition switch has been turned off and back on, and the vehicle has begun forward speed. If the low fuel lamp flashes at a steady rate, see a Harley-Davidson dealer.

Battery

The red battery charging lamp (3) indicates either overcharging or undercharging of the battery. See Battery Maintenance.

If the lamp remains illuminated, see a Harley-Davidson dealer.

Security Lamp

The red security lamp (4) indicates when the security system is armed. See Security System.

If the lamp remains lit continuously, see a Harley-Davidson dealer.

ABS Lamp

WARNING

If ABS lamp continues flashing at speeds greater than 3 mph (5 km/h) or remains on continuously, the ABS is not operating. The standard brake system is operational, but wheel lock up can occur. Contact a Harley-Davidson Dealer to have ABS repaired. A locked wheel will skid and can cause loss of vehicle control, which could result in death or serious injury. (00361b)

Flashing: On vehicles with ABS, the ABS lamp begins flashing when the vehicle is turned on. The flashing lamp indicates that the system is in self-diagnosis mode. It continues to flash until motorcycle speed exceeds 3 mph 5 km/h . ABS is not operational until the lamp turns off. Refer to Brake System.

Solid: Continuous illumination of the lamp indicates an ABS malfunction. ABS is disabled and the brakes are operating as if they were non-ABS brakes. See a Harley-Davidson dealer for service.

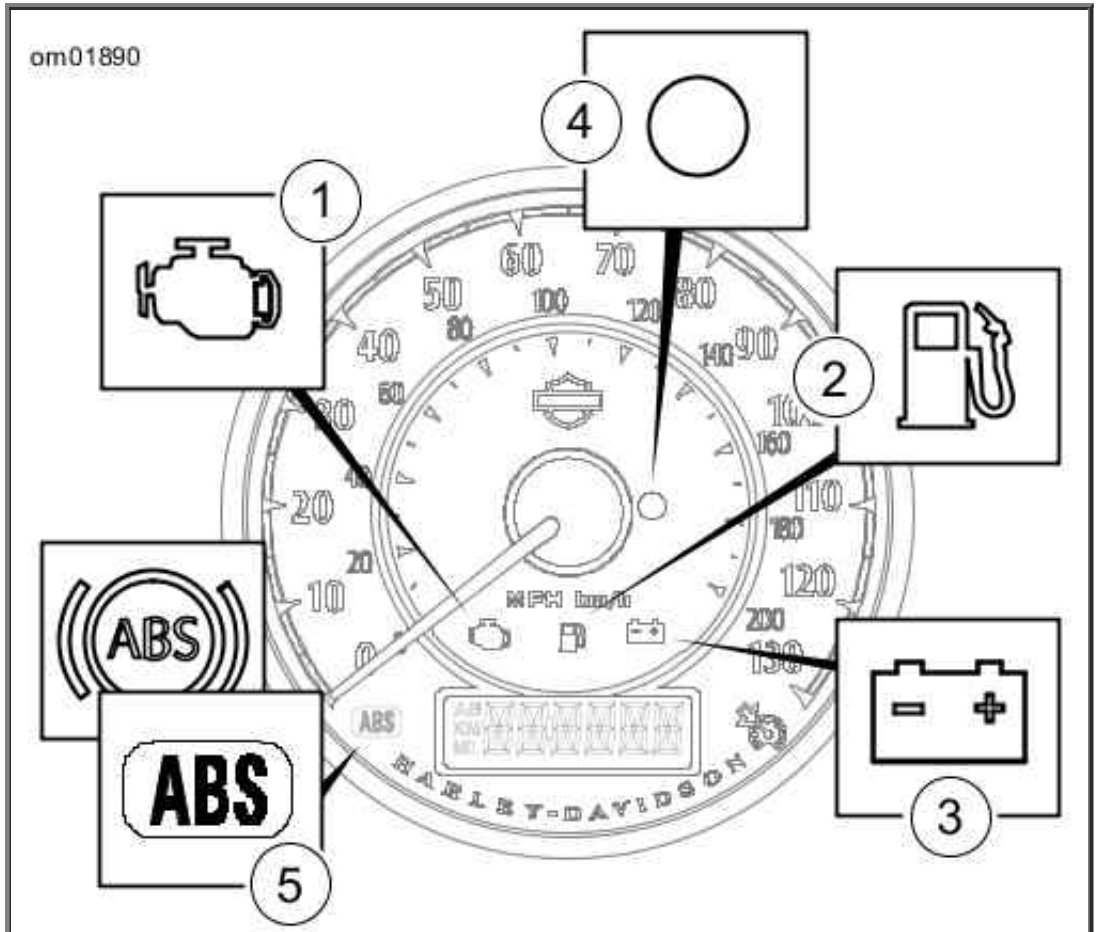

1. Check engine
2. Low fuel
3. Battery
4. Security system
5. ABS (ABS km/h icon also shown)

Instrument Lamps

Indicator Lamps

See Indicator Lamp Bar. Five indicator lamps are provided in the instrument panel.

Turn Indicator Lamps

The turn indicators (1, 5) flash when a turn signal is activated. When the 4-way hazard flashers are operating, both turn indicators flash simultaneously.

Headlamp High Beam Indicator Lamp

The headlamp high beam indicator lamp (2) is lit when the high beam or flash to pass switch is activated.

Neutral Indicator Lamp

The neutral indicator lamp (3) is lit when the transmission is in neutral.

Oil Pressure Indicator Lamp

The oil pressure indicator lamp (4) is lit when sufficient oil is not circulating through the engine.

The lamp is lit when the ignition is turned on before starting the engine. With engine running, lamp should be off when engine speed is above idle.

Circumstances that could cause the oil indicator lamp to illuminate:

- Low oil level. Stop engine immediately. Add oil.
- Diluted oil. Change oil as soon as possible.
- Incorrect oil for the operating temperature. Change oil as soon as possible.
- For further information, see Troubleshooting.

CAUTION

If the oil pressure indicator lamp remains lit, always check the oil supply first. If the oil supply is normal and the lamp is still lit, stop the engine at once and do not ride further until the trouble is located and the necessary repairs are made. Failure to do so may result in engine damage. (00157a)

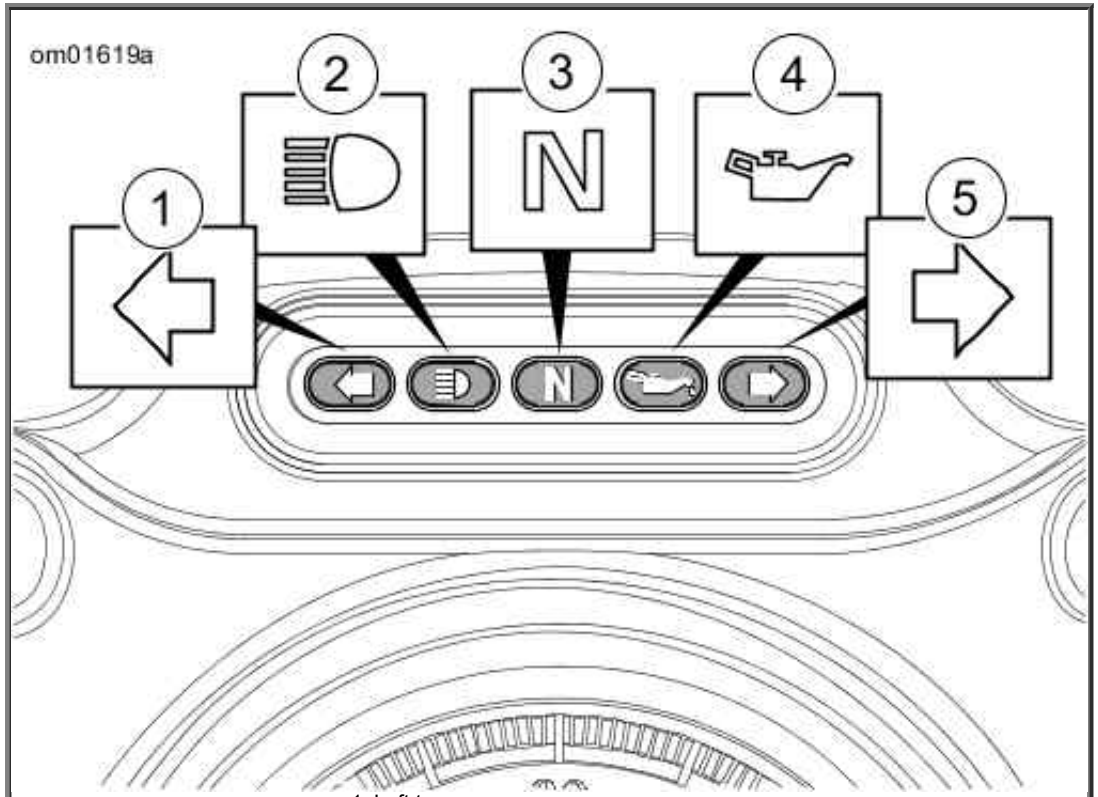

1. Left turn
2. High beam
3. Neutral
4. Oil pressure
5. Right turn

Indicator Lamp Bar

Gear Shift Lever

Location

See Shift Lever and Shift Pattern. The gear shift lever is located on the left side of the motorcycle and is operated with the left foot. The shift lever changes gears in a sequential five-speed transmission.

Shift Pattern

CAUTION

The clutch must be fully disengaged before attempting a gear shift. Failure to fully disengage the clutch can result in equipment damage. (00182a)

See Shift Lever and Shift Pattern. Each gear must be engaged in sequence. Lift the gear shift lever to upshift and press the lever to downshift. After each gear change, release the gear shift lever to allow it to return to its resting position. See Shifting Gears.

Neutral

Neutral is located between first and second gear. The transmission can be shifted to neutral from either first or second gear. Lift or press the gear shift lever one-half of its stroke. In neutral, the indicator lamp will light.

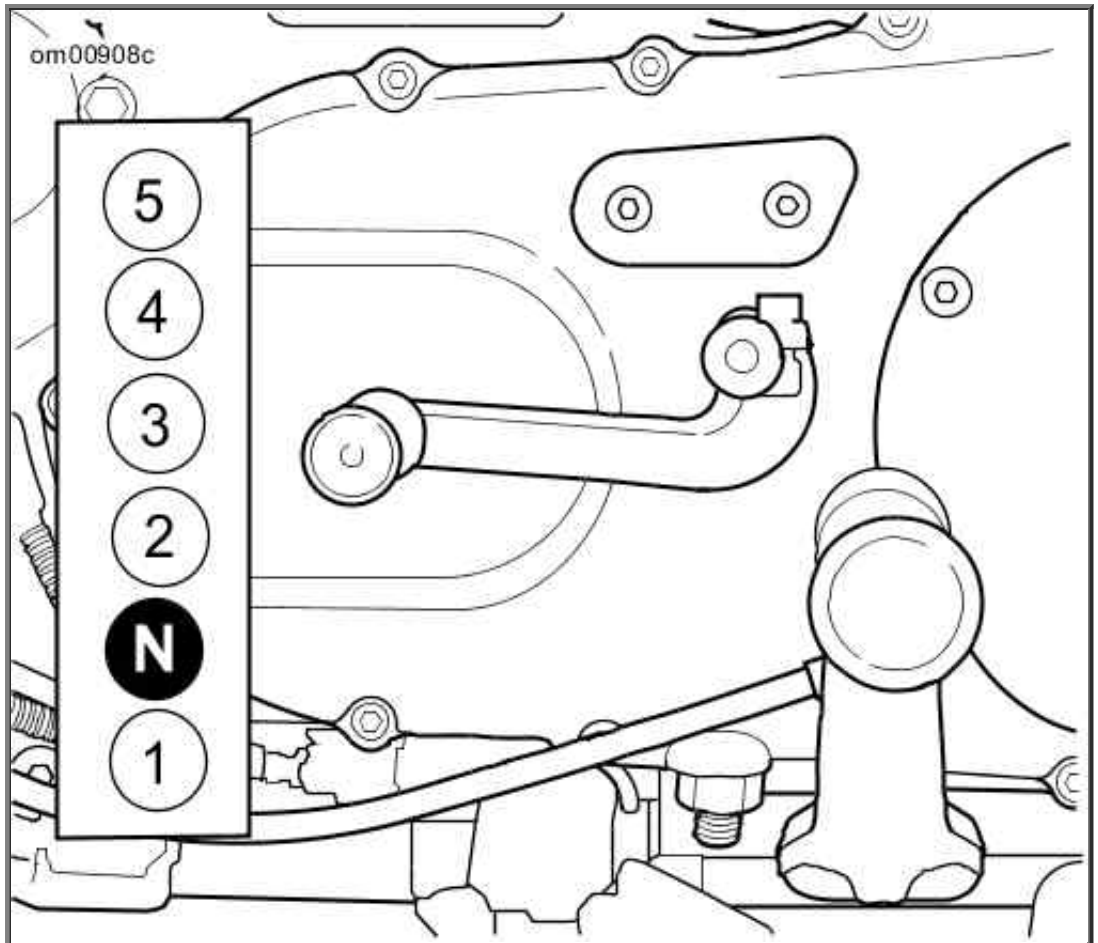

Shift Lever and Shift Pattern

Identification

See Wheel Speed Sensor Clip (ABS Identification). Sportster models with the ABS option can be identified by a wheel speed sensor on the left side of the front wheel. The wheel speed sensor has a clip with 'ABS' on it.

See ABS Module (EHCU). These motorcycles also have an ABS module (EHCU) mounted just in front of the rear wheel.

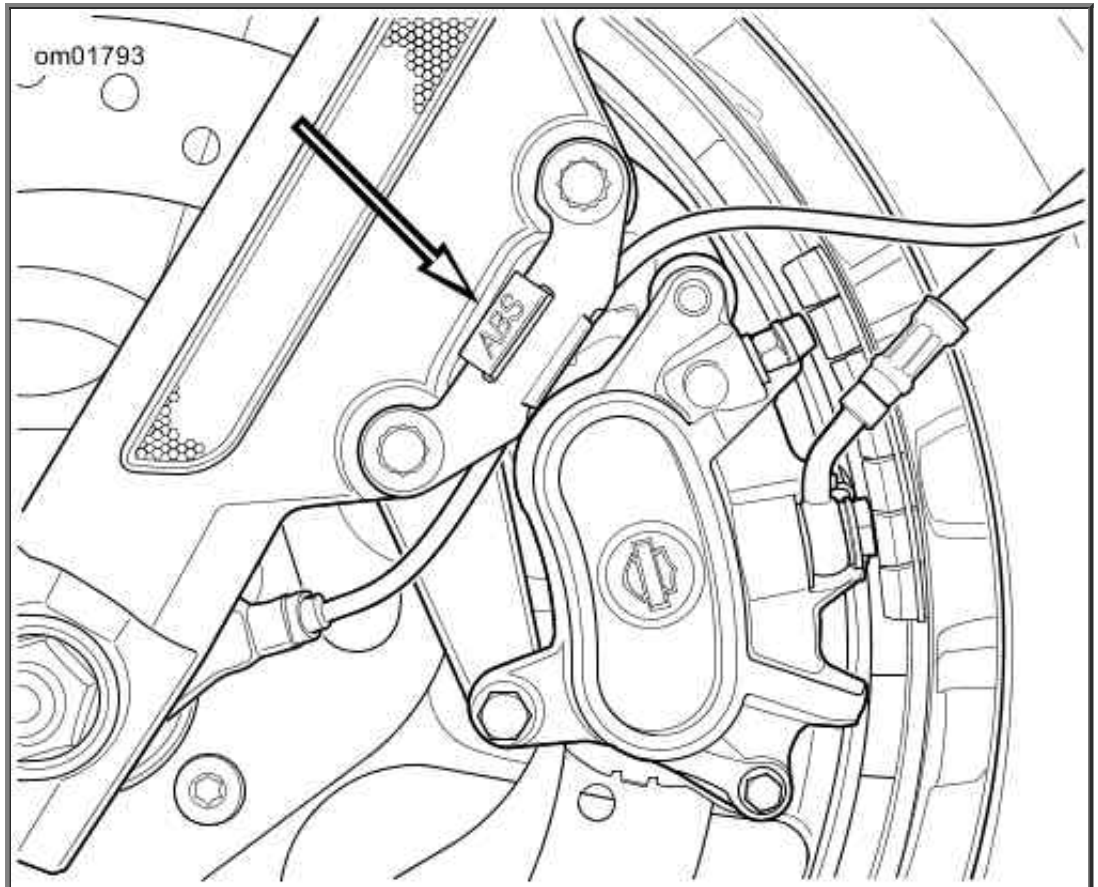

Wheel Speed Sensor Clip (ABS Identification)

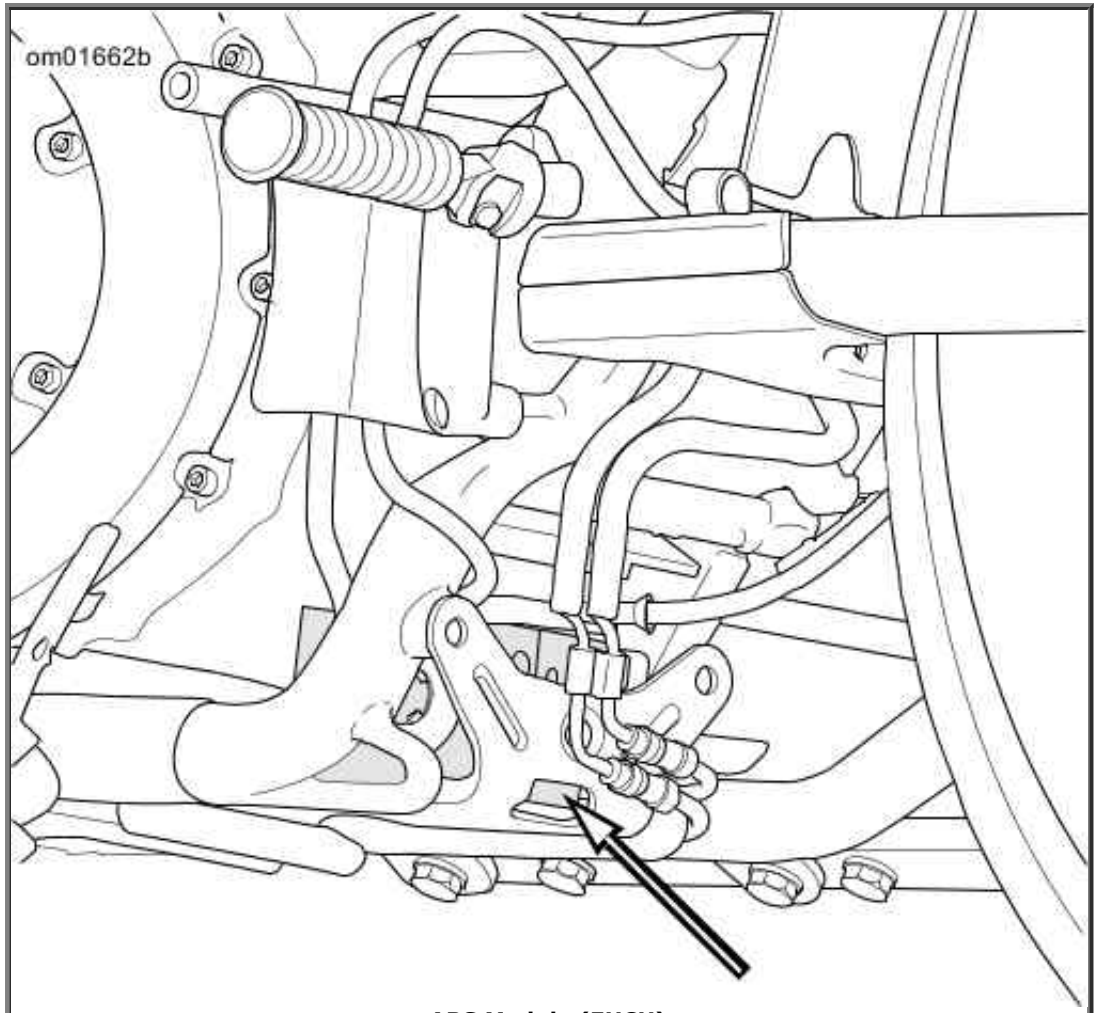

ABS Module (EHCU)

Brake System

Front Brake Lever

⚠WARNING

Do not position fingers between hand control lever and handlebar grip. Improper hand

positioning can impair control lever operation and cause loss of vehicle control, which could result in death or serious injury. (00032a)

See Brake Controls. The front brake hand lever (1) controls the front wheel brake and is located on the right handlebar. Operate the hand lever with the fingers of the right hand.

Rear Brake Pedal

See Brake Controls. The rear brake pedal (2) controls the rear wheel brake and is located on the right side. Operate the rear brake pedal with the right foot.

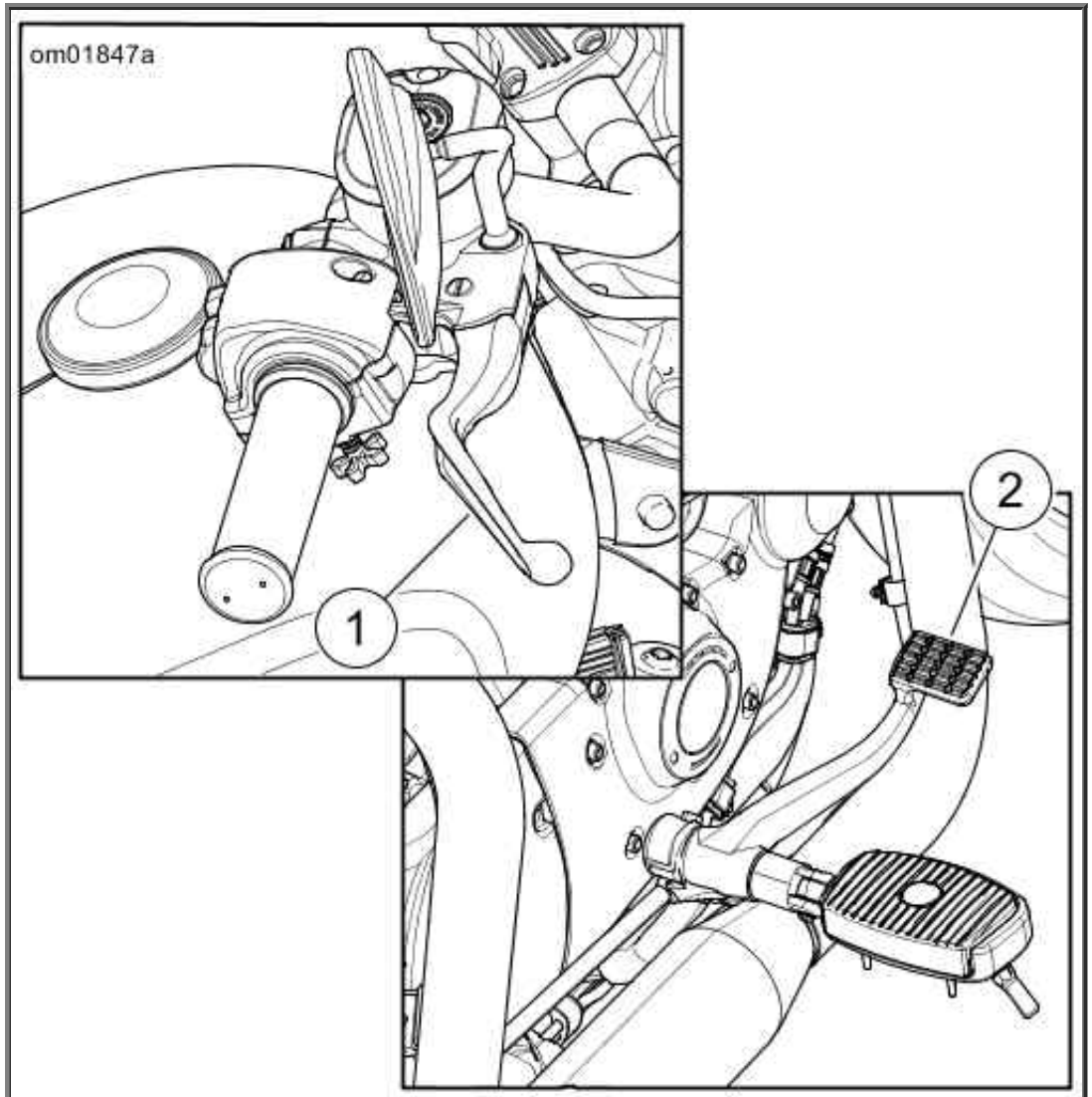

1. Front brake lever
2. Rear brake pedal

Brake Controls

Non-ABS Brake System

Apply brakes uniformly and evenly to prevent wheels from locking. Use front and rear brakes equally for best results.

⚠WARNING

Do not apply brake strongly enough to lock the wheel. A locked wheel will skid and can cause loss of vehicle control, which could result in death or serious injury. (00053a)

Anti-lock Brake System (ABS)

The optional Harley-Davidson anti-lock brake system assists the rider in maintaining control when braking in a straight-line emergency situation. ABS operates independently on front and rear brakes to keep the wheels rolling and prevent uncontrolled wheel lock-ups either on dry pavement or on slick surfaces such as gravel, leaves or when riding in wet conditions.

How ABS Works

The ABS monitors sensors at the front and rear wheels to determine wheel speed. If the system detects one or both wheels are slowing down too quickly, which indicates they are close to locking, the ABS reacts. If the deceleration rate does not match a criteria stored in memory, the ABS also reacts. The system rapidly opens and closes valves to modulate the brake caliper pressure utilizing only the brake lever/pedal pressure being applied by the rider. During ABS activation, the system provides the electronic equivalent of manually pumping the brakes. ABS is capable of cycling up to seven times per second.

The rider will recognize ABS activation by the slight pulsing sensation in the hand lever or the rear brake pedal. The pulsing sensation may also be accompanied by a clicking sound from the ABS module. Both are the result of normal operation. Refer to ABS Symptoms and Conditions.

How To Use ABS

While an advantage in emergency braking, ABS is not a substitute for safe riding. The safest way to stop a motorcycle is upright with both wheels straight.

Harley-Davidson ABS is a manual assist system. When stopping in an emergency stopping situation, maintain pressure on the brakes through all ABS events. Do not modulate or "pump" the brake controls. The wheels will not lock until the end of the stop when motorcycle speed reaches approximately 4 mph 6 km/h and ABS is no longer needed.

⚠WARNING

ABS cannot prevent lockup of rear wheel due to engine braking. ABS will not aid in cornering or on loose/uneven surfaces. A locked wheel will skid and can cause loss of vehicle control, which could result in death or serious injury. (00362a)

ABS: Tires and Wheels

Motorcycles equipped with ABS must always use Harley-Davidson tires and wheels. The ABS monitors the rotational speed of the wheels through individual wheel speed sensors. Changing to different diameter wheels or different-sized tires can alter the rotational speed. This can upset the calibration of the ABS and have an adverse effect on its ability to detect and prevent uncontrolled wheel lockups. Operating at tire pressures other than those specified in Specified Tires can reduce ABS braking performance.

ABS Symptoms and Conditions

SYMPTOM	CONDITION
ABS lamp continuously lit	ABS malfunction detected. See a Harley-Davidson dealer for service.
ABS lamp flashing	This indicates a normal self-diagnostics process when the motorcycle is first turned on and the speed is under 3 mph 5 km/h . ABS is not operational until the lamp turns off. If the lamp continues flashing at speeds greater than 3 mph 5 km/h , see a Harley-Davidson dealer for service.
Pulsing brake lever or pedal during an ABS event	Normal condition.
Clicking sound during an ABS event	Normal condition.
"Surge" sensation while braking	Normal condition. This is most noticeable when braking with one brake (front only or rear only). Result of a reduction in deceleration which can be caused by cracks or bumps in road, engine braking (high engine RPMs causing the rear wheel to slow down), hard braking at slow speeds, and other conditions. This is due to ABS modulating caliper brake pressure to prevent uncontrolled wheel lock.
Temporarily stiff rear brake pedal	Normal condition. Engine braking (high engine RPMs causing the rear wheel to slow down) or down shifting can activate ABS. If applying the rear brake at the same time or immediately after, the ABS may be closing a valve to prevent pressure to the rear brake. This is due to ABS modulating caliper brake pressure to prevent uncontrolled wheel lock.
Tire chirp	Normal condition. Depending on surface, tire can chirp without locking the wheel.
Black mark on pavement	Normal condition. Depending on surface, tire can leave a black mark without locking the wheel.
Wheel lock at low speed	Normal condition. ABS does not activate on front wheel below 3 mph 5 km/h or on rear wheel below 5 mph 8 km/h .

Jiffy Stand

WARNING

Always park motorcycle on a level, firm surface. An unbalanced motorcycle can fall over, which could result in death or serious injury. (00039a)

The jiffy stand is located on the left side of the motorcycle. The stand swings outward to support the motorcycle for parking.

WARNING

The jiffy stand locks when placed in the full forward (down) position with vehicle weight on it. If the jiffy stand is not in the full forward (down) position with vehicle weight on it, the vehicle can fall over which could result in death or serious injury. (00006a)

WARNING

Be sure jiffy stand is fully retracted before riding. If jiffy stand is not fully retracted, it can contact the road surface causing a loss of vehicle control, which could result in death or serious injury. (00007a)

Jiffy Stand Interlock: International Models

Some international models have a jiffy stand interlock.

If the transmission is in neutral, the motorcycle will start and run. If the jiffy stand is down and the transmission in gear, engaging the clutch stalls the motorcycle. The message "SidEStAnd" scrolls across the odometer. Raising the jiffy stand or putting the transmission in neutral will permit the engine to run. The odometer will clear the message.

If the stand lowers at a speed greater than 10 mph 15 km/h , the engine will continue to run. The indicators will flash twice. The message "SidEStAnd" will scroll across the odometer. The message remains until the system detects the jiffy stand in the fully retracted position again. The rider can continue to ride while in this mode.

The rider can clear the text messages at any time by pressing the TRIP/trigger switch once while the vehicle is powered up.

Rear View Mirrors

WARNING

Objects in mirrors are closer than they appear. Use caution when judging distance of objects in mirrors. Failure to judge correct distances could result in death or serious injury. (00033a)

Your motorcycle has two convex rear view mirrors.

This type of mirror is designed to give a much wider view to the rear than a flat mirror. However, cars and other objects seen in this type of mirror look smaller and farther away than they actually are.

- Use caution when judging the size or relative distance of objects seen in rear view mirrors.
- Always adjust the rear view mirrors to reflect the area behind the motorcycle before riding.

NOTE:

Adjust mirrors so you can see a small portion of your shoulders in each mirror. This will help you establish the relative distance of vehicles to the rear of your motorcycle.

Rear View Mirrors: XL1200X

CAUTION

Improperly aligned handlebars or components can contact the fuel tank when turned to the left or right. Contact with the fuel tank can cause cosmetic damage. (00372b)

See Rear View Mirror: XL1200X. When adjusting mirrors, slowly turn handlebars to the full right and full left positions to make sure the mirrors do not contact the fuel tank.

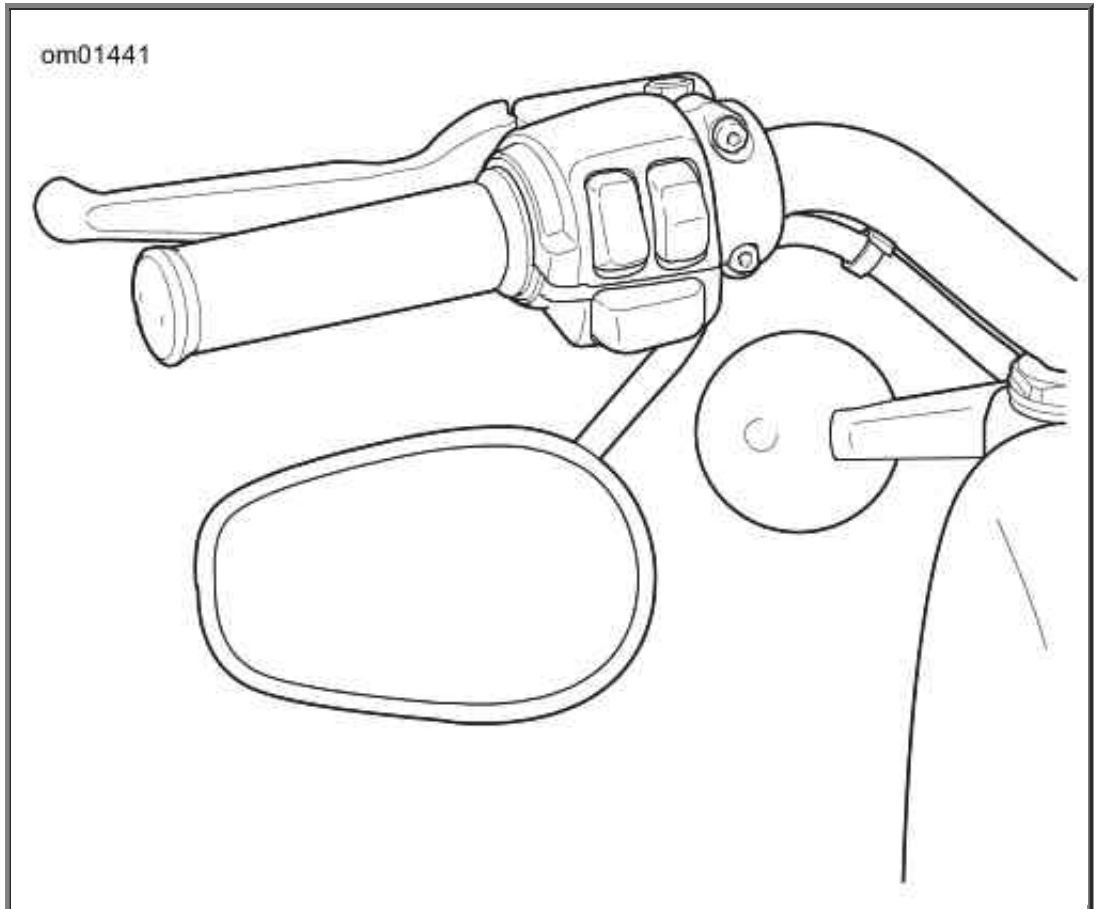

Rear View Mirror: XL1200X

Fuel Filler Cap

See SAFE OPERATING RULES section and review the following safety procedures.

⚠WARNING

Do not store motorcycle with gasoline in tank within the home or garage where open flames, pilot lights, sparks or electric motors are present. Gasoline is extremely flammable and highly explosive, which could result in death or serious injury. (00003a)

⚠WARNING

Avoid spills. Slowly remove filler cap. Do not fill above bottom of filler neck insert, leaving air space for fuel expansion. Secure filler cap after refueling. Gasoline is extremely flammable and highly explosive, which could result in death or serious injury. (00028a)

⚠WARNING

Do not use aftermarket fuel caps. Aftermarket fuel caps may fit improperly and leak, which could lead to death or serious injury. See a Harley-Davidson dealer for approved fuel caps. (00034a)

CAUTION

Do not spill fuel onto the motorcycle while refueling. Immediately wipe up fuel spills on your motorcycle. Fuel can cause damage to cosmetic surfaces. (00147b)

CAUTION

Use only unleaded fuel in catalytic converter-equipped motorcycles. Using leaded fuel will damage the emission control system. (00150b)

NOTE:

Fuel filler cap rotates approximately a three-quarter turn before it starts unscrewing.

See Fuel Filler Cap. To open, turn fuel filler cap counterclockwise and lift. To close, turn fuel filler cap clockwise until it clicks. The ratchet action of the cap prevents over-tightening.

Sportsters sold in some countries are equipped with a locking fuel cap.

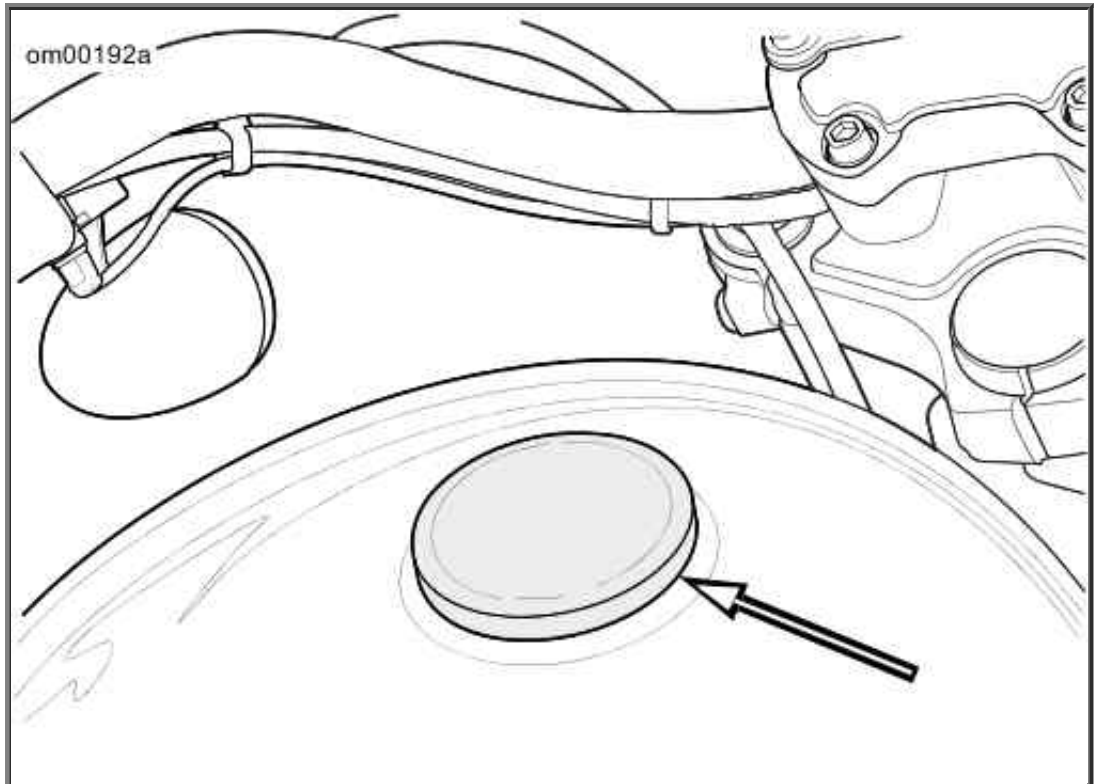

Fuel Filler Cap

Locking Fuel Filler Cap (Japan and Asia Pacific)

Replacement Keys

Find the four-digit key number stamped on the back of the key opposite the H-D logo. Write the ignition key number in the space provided at the front of this manual. With that number, your Harley-Davidson dealer can order a replacement.

Removal

1. See Locking Fuel Filler Cap. Rotate the lock cover to access the key lock.
2. Insert the key.
3. Hold the fuel filler cap in place. Turn the key counterclockwise until it stops.
4. Turn key back to its original position. Remove the key.

5. Turn cap counterclockwise until resistance is felt. Continue to turn cap counterclockwise to remove cap.

Installation

1. See Locking Fuel Filler Cap. Insert the key into the lock.
2. To make sure that the cap is unlocked, firmly, hold the cap. Turn the key counterclockwise until it stops.
3. Allow the key to return to a neutral position. Remove the key.

   NOTE:

   When installing the fuel cap, rotate the cap one full turn past the audible click.
4. Turn the cap clockwise to install the fuel cap.
5. Close the lock cover.

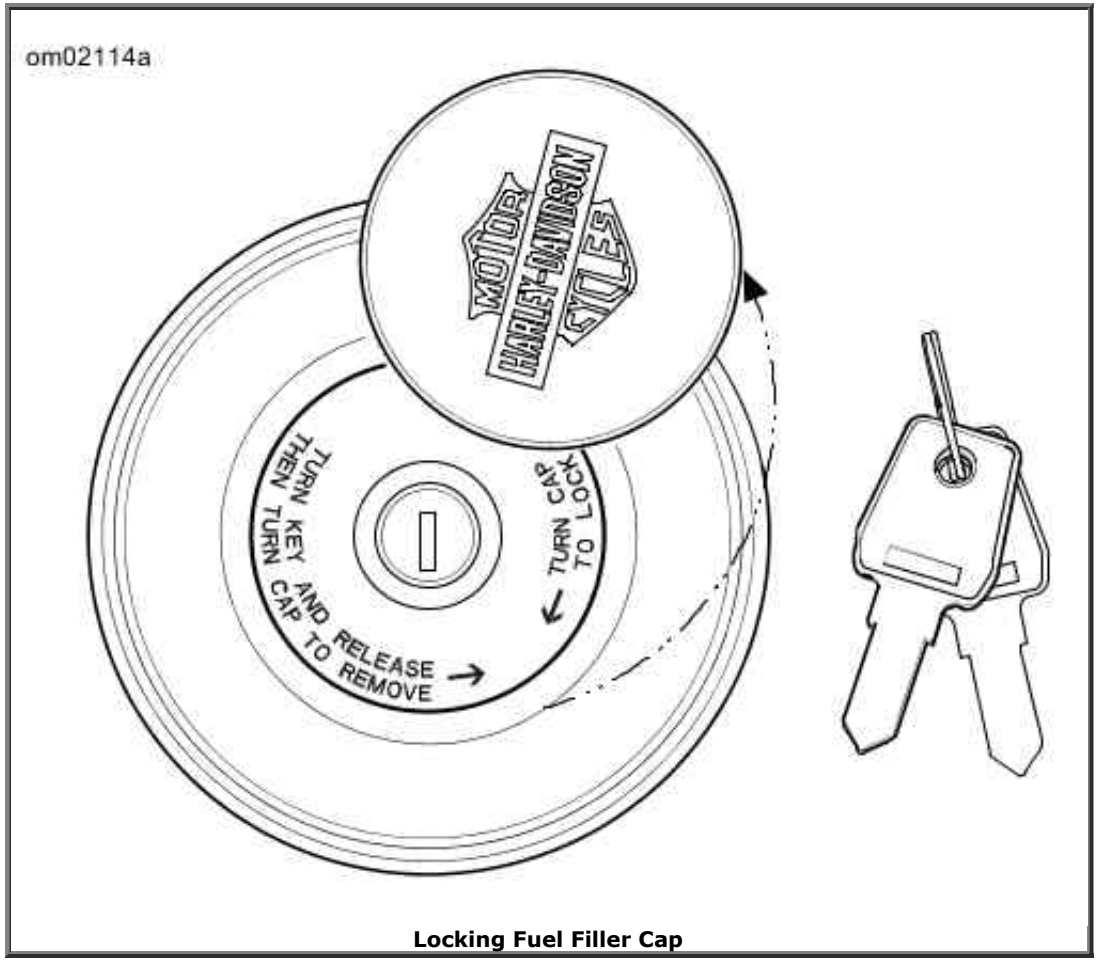

Locking Fuel Filler Cap

Fork Lock

CAUTION

Protect your vehicle against theft. Failure to lock the motorcycle after parking could result in theft and/or equipment damage. (00151b)

See Fork Lock Location: Sportster Models. Sportster models have the fork lock on the right side of the steering head. Using the fork lock immediately after parking your motorcycle will discourage unauthorized use or theft.

WARNING

Do not operate vehicle with forks locked. Locking the forks restricts the vehicle's turning ability, which could result in death or serious injury. (00035a)

See Fork Lock Positions: Sportster Models. Lock the fork.

1. Turn fork to full left position.
2. Insert key into fork lock.
3. Turn to right position (clockwise).
4. Remove lock key.

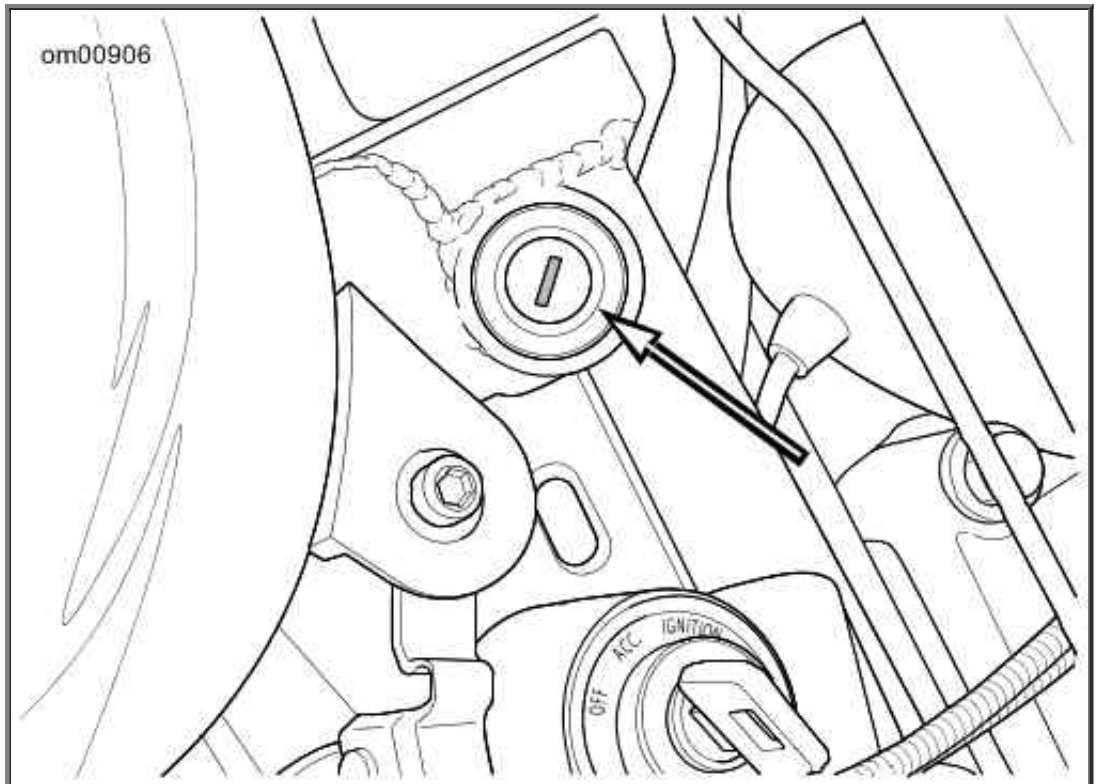

Fork Lock Location: Sportster Models

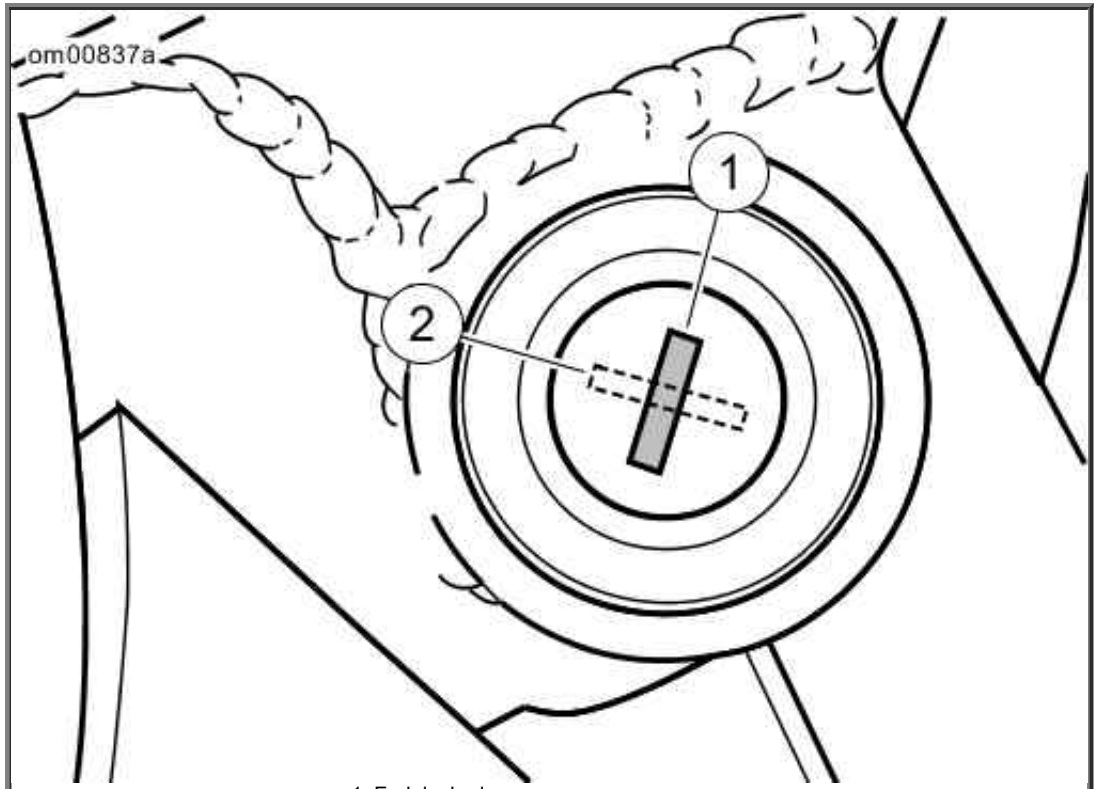

1. Fork locked
2. Fork unlocked

Fork Lock Positions: Sportster Models

Windshield: XL1200T

Removal

CAUTION

Polycarbonate windscreens/windshields require proper attention and care to maintain. Failure to maintain polycarbonate properly can result in damage to the windscreen/windshield. (00483d)

CAUTION

Use only Harley-Davidson recommended products on Harley-Davidson windshields. Do not use harsh chemicals or rain sheeting products, which can cause windshield surface damage, such as dulling or hazing. (00231c)

NOTE:

Windshields require special care. Do not use ammonia-based or gas station window cleaners. These cleaners can damage the windshield. For proper windshield maintenance, see Windshield Care.

1. See Windshield Clamp Levers. While supporting the windshield, open the clamp levers.
2. Lift the windshield forward off the front forks.

Installation

⚠WARNING

Be sure that steering is smooth and free without interference. Interference with steering could result in loss of vehicle control and death or serious injury. (00371a)

⚠WARNING

Pinched throttle cables can restrict throttle response, which could result in loss of control and death or serious injury. (00423b)

1. Verify that rubber gaskets are in place in the clamp saddles.
2. To check operation, cycle the clamps open and close.
3. Straddle the front fender. Hold the windshield with both hands.
4. Fit the clamps to the fork slider tubes between the upper and lower fork brackets. If any of the four clamps do not align to the fork slider tubes:
    a. Loosen the clamp shoulder bolt.
    b. Rotate the clamp to align with the slider tube.
    c. Repeat until all four clamps align to the slider tube.
    d. Seat each clamp bolt in the windshield bracket. Tighten to 48-72 in-lbs (5.4-8.1 Nm).
5. Align the windshield:
    a. Center the windshield to the fork tubes, headlamp and speedometer.
    b. Align the height to not block turn signals, pinch turn signal wire harnesses or interfere with clutch cable.

6. Lock the clamps with the levers.
7. Check that all four clamps are in the locked position and the windshield is secure.

Check the windshield mounting hardware periodically. Never ride with loose mounts. A loose mount causes extra stress on the remaining mounts, as well as the windshield itself, and could cause premature failure of components.

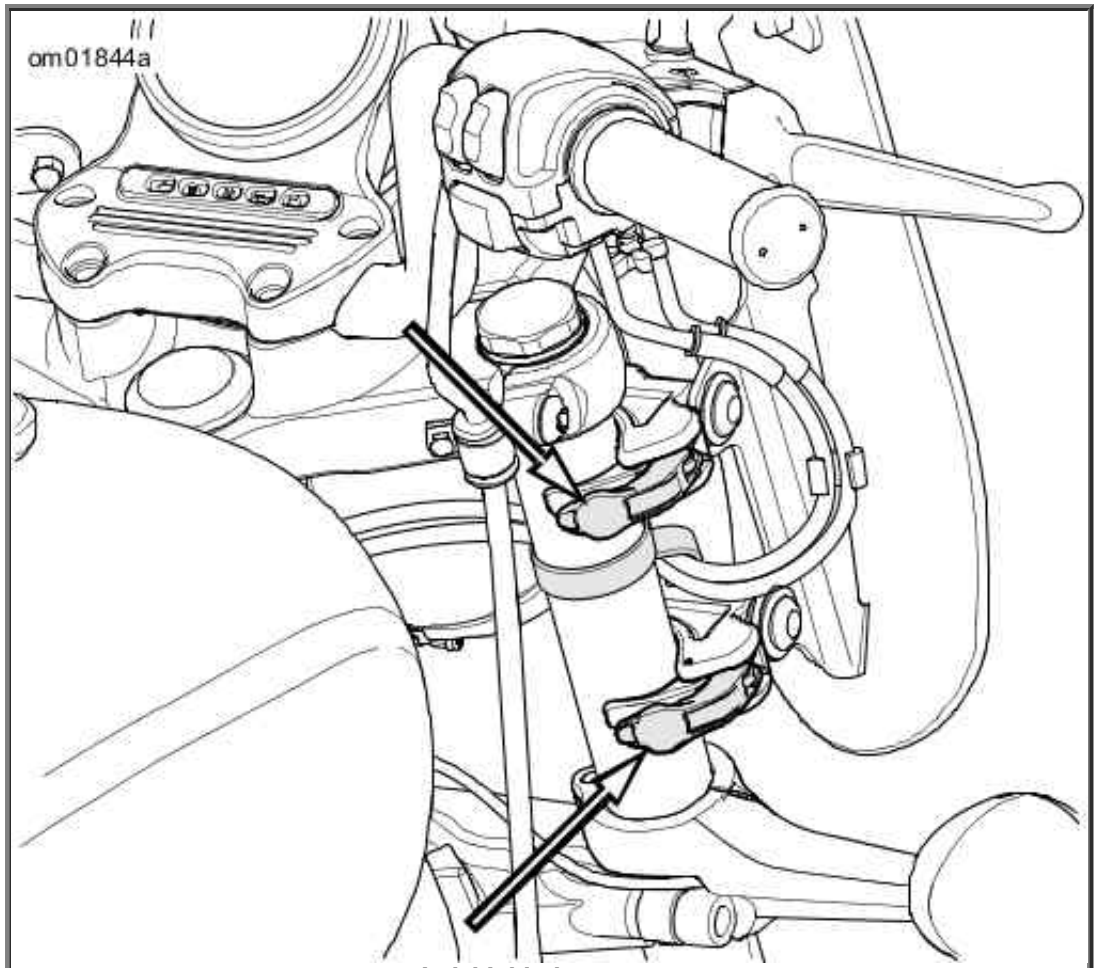

Windshield Clamp Levers

Shock Absorber Preload: All But XL1200T

Identify Length of Shock

Different Sportster models in various markets have either a low, medium or tall shock absorber.

1. Park your motorcycle on the jiffy stand without any luggage or load.
2. See Shock Absorber Length. Measure from the center of the lower shock mounting bolt to the center of the upper mounting bolt.
3. Compare the measurement to the identification table to determine if your motorcycle has low, medium or tall shock absorbers. Refer to Shock Absorber Length.

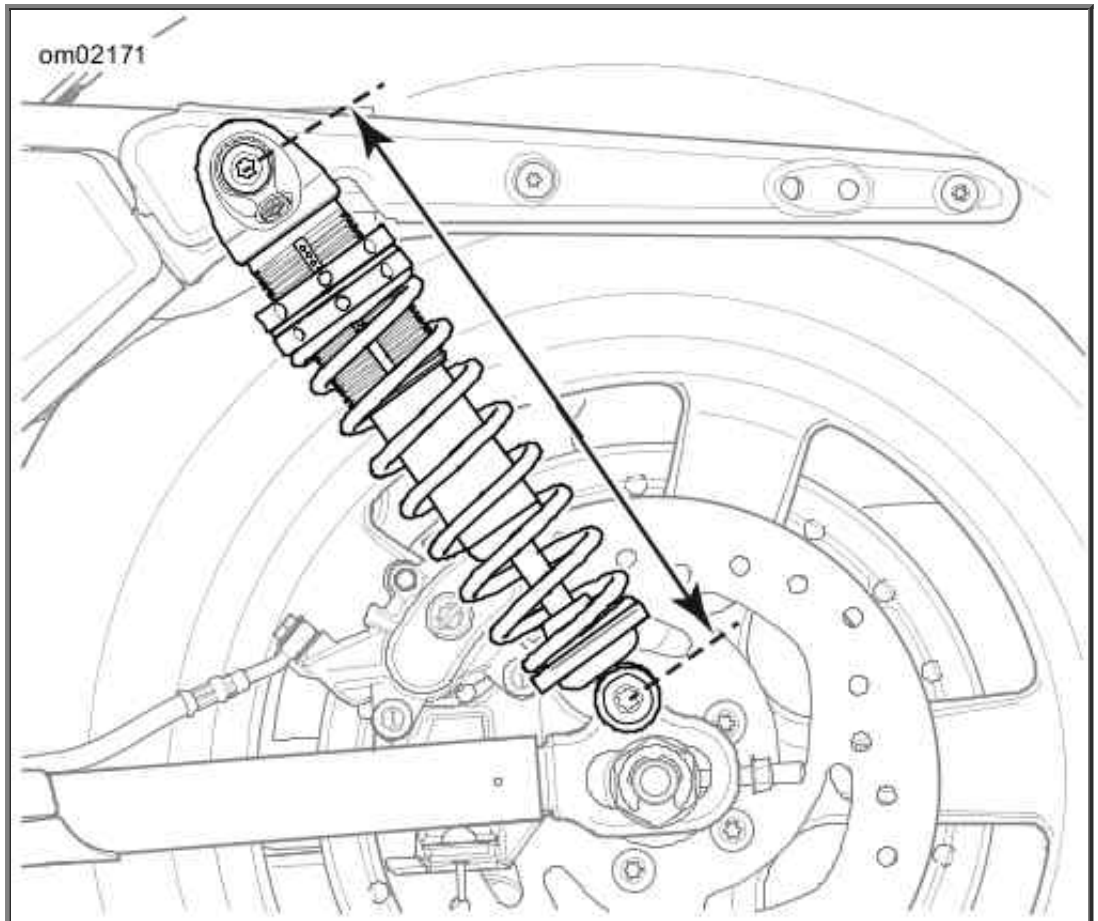

Shock Absorber Length

Shock Absorber Length

MEASUREMENT *		SHOCK
in	mm	
11.220	285.0	Low. Refer to Low Travel Shocks Preload.
11.712	297.5	Medium. Refer to Medium Travel Shocks Preload.
13.366	339.5	Tall. Refer to Tall Travel Shocks Preload.
* Measure unladed on sidestand.		

Identify the Preload Dot

1. Add the weight of the rider and riding gear to get the rider weight.
2. Separately, add the weight of the passenger, their riding gear, intended cargo and any accessories.

NOTE:

The total of rider weight and passenger plus cargo and accessories cannot exceed the maximum added weight allowed. Refer to Maximum Added Weight Allowed: All except XL1200T.

Maximum Added Weight Allowed: All except XL1200T

MODEL	SPECIFICATIONS	
	lb	kg
XL883L	435	198
XL883N	438	199
XL1200C	413	188
XL1200CP	413	188
XL1200CA	409	186
XL1200CB	401	182
XL1200X	449	204
XL1200V	441	200

3. In the table corresponding to the shock length (low, medium, tall) on your motorcycle, identify the preload dot.
   a. Under RIDER WEIGHT, identify the row that includes the total weight of the rider
   b. In the row of PASSENGER, CARGO AND ACCESSORIES, identify the total weight column for any passenger, cargo and accessories.
   c. The number at the intersection of the RIDER WEIGHT row and the PASSENGER, CARGO AND ACCESSORIES column is the recommended preload dot.

Low Travel Shocks Preload

ADDITIONAL WEIGHT OF PASSENGER, CARGO AND ACCESSORIES														
lb		0	20	40	60	80	100	120	140	160	180	200	220	240
kg		0	9.0	18.1	27.2	36.3	45.4	54.4	63.5	72.6	81.6	90.7	99.8	108.7
RIDER WEIGHT		PRELOAD DOT												
lb	kg													
100-129	45.4-58.5	1	2	3	4	5	6	6	7	8	9	9	10	10
130-159	59.0-72.1	2	3	4	5	6	7	7	8	9	9	10	10	11

160-189	72.6-85.7	3	4	5	6	7	7	8	9	9	10	10	11	12
190-219	86.2-99.3	4	5	6	7	7	8	9	9	10	11	11	12	-

Medium Travel Shocks Preload

		WEIGHT OF PASSENGER, CARGO AND ACCESSORIES															
lb		0	16	32	48	64	80	96	112	128	144	160	176	192	208	224	240
kg		0	7.3	14.5	21.8	29.0	36.3	43.5	50.8	58.0	65.3	72.6	79.8	87.1	94.3	101.6	108.9
RIDER WEIGHT		**PRELOAD DOT**															
lb	**kg**																
100-123	45.4-55.8	1	2	3	4	5	6	7	7	8	9	9	10	11	11	12	13
124-147	56.2-66.7	2	3	4	5	6	7	7	8	9	9	10	11	11	12	13	13
148-171	67.1-77.6	3	4	5	6	7	8	8	9	9	10	11	11	12	13	13	-
172-195	78.0-88.5	4	5	6	7	8	8	9	10	10	11	12	12	13	13	-	-
196-219	88.9-99.3	5	6	7	8	8	9	10	10	11	12	12	13	13	-	-	-

Tall Travel Shocks Preload

		WEIGHT OF PASSENGER, CARGO AND ACCESSORIES													
lb		0	18	36	54	72	90	108	126	144	162	180	198	216	234
kg		0	8.2	16.3	24.5	32.7	40.8	49.0	57.2	65.3	73.5	81.6	89.8	98.0	106.1
RIDER WEIGHT		**PRELOAD DOT**													
lb	**kg**														
116-141	52.6-64.0	1	2	3	4	5	6	7	8	9	10	11	11	12	13
142-167	64.4-75.7	2	3	4	5	6	7	8	9	10	11	11	12	13	-
168-193	76.2-87.5	3	4	5	6	7	8	9	10	11	11	12	13	-	-
194-219	88.0-99.3	4	5	6	7	8	9	10	11	11	12	13	-	-	-

Shock Adjustment

WARNING

Adjust both shock absorbers equally. Improper adjustment can adversely affect stability and

Adjust both shock absorbers equally. Improper adjustment can adversely affect stability and handling, which could result in death or serious injury. (00036b)

NOTE:

To prevent damage to the adjustment and locking rings, do not use any other wrench than the one supplied with your motorcycle.

1. Remove seat. See Seat.
2. See Spanner Wrench Retention Pocket. Lift the latch (2) and slide the spanner wrench (1) from the retention pocket.

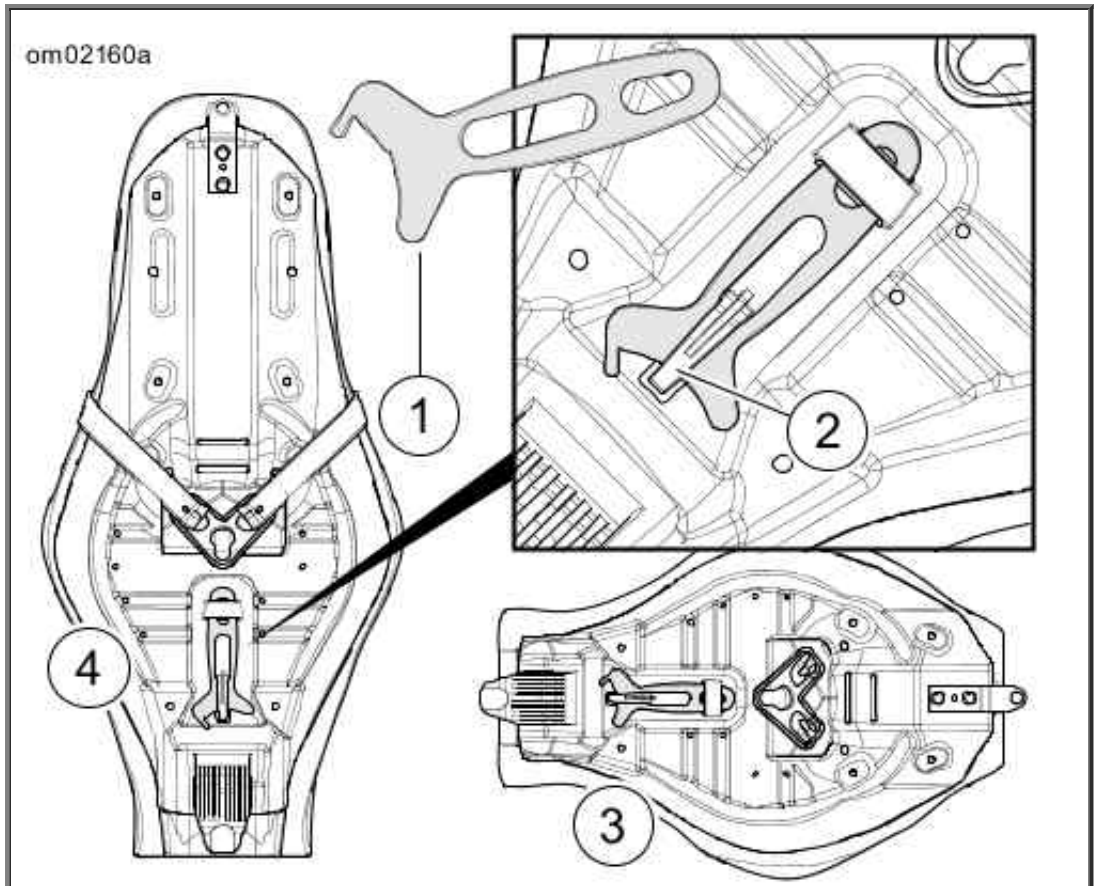

1. Spanner wrench
2. Latch
3. Solo seat
4. Two-up seat

Spanner Wrench Retention Pocket

CAUTION

Avoid shock damage. Make sure shock threads are clean and free of debris before loosening or tightening shock adjusting nuts. (00646b)

3. If necessary, clean the threads on the shock absorber.
4. See Preload Adjustment. Use the spanner wrench to turn the upper locking ring counterclockwise (1) to unlock the ring.

   NOTE:

   Count down from the top of the shock to locate the recommended preload dot.
5. Use the spanner wrench to turn (2) the lower adjustment ring below the recommended dot.
6. Rotate the upper locking ring to align with the recommended preload dot (3).
7. Cover one-half the recommended preload dot (4) with the upper locking ring.
8. Use the wrench to hand tighten the lower adjustment ring against the locking ring (5).
9. Return the spanner wrench to the retention pocket under the seat.
10. Install seat. See Seat.

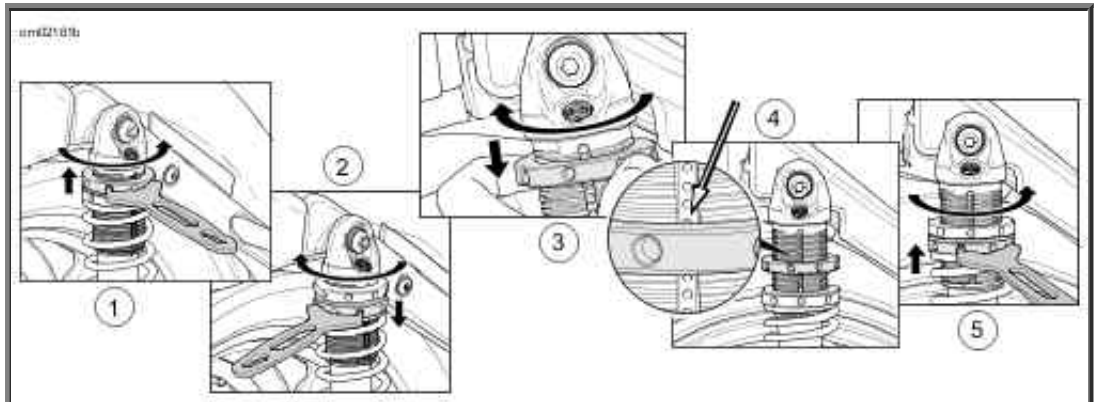

1. Loosen locking ring
2. Turn adjustment ring below recommended dot
3. Rotate locking ring to dot
4. Align locking ring to dot
5. Tighten adjustment ring

Preload Adjustment

Shock Absorber Preload: XL1200T

WARNING

Adjust rear shock before riding. Distractions can lead to loss of control, resulting in death or serious injury. (00638b)

⚠WARNING

Do not adjust suspension while riding. Adjustment knob is located near spinning rear tire/wheel, which could be inadvertently contacted, resulting in serious injury. (00639b)

1. See Preload Adjustment Knob: XL1200T. Locate the preload adjustment knob behind the left saddlebag.
2. Rotate the preload adjustment knob counterclockwise until it stops aligned with the LOW mark. The LOW setting is the minimum preload position.

   NOTES:
   - ***Example:*** *For a rider weighing 160 lb 73 kg riding with a passenger weighing 125 lb 56.7 kg and 10 lb 4.5 kg of cargo in the saddlebags, the recommended preload setting is 16 turns (32 clicks) from the LOW setting.*
   - *The HIGH setting is the maximum preload position.*
3. Rotate the preload adjustment knob clockwise the recommended number of turns for the weight of the rider and the combined weight of a passenger and cargo. Two clicks of the knob are a turn. Refer to Recommended Turns: XL1200T Shock Preload Knob (two clicks equal one turn).

⚠WARNING

Do not exceed the motorcycle's Gross Vehicle Weight Rating (GVWR) or Gross Axle Weight Rating (GAWR). Exceeding these weight ratings can lead to component failure and adversely affect stability, handling and performance, which could result in death or serious injury. (00016f)

NOTES:
- ***GVWR:*** *GVWR is the sum of the weight of the motorcycle, accessories and the maximum weight of the rider, passenger and cargo that can be safely carried.*
- ***GAWR:*** *GAWR is the maximum amount of weight that can be safely carried on each axle.*
- *See information label on frame downtube for GVWR, front axle GAWR and rear axle GAWR. Refer to Weights: XL883 Models or Weights: XL1200 Models.*
- *Maximum additional weight allowed cannot exceed specifications. Refer to Maximum Added Weight Allowed: XL1200T.*

Maximum Added Weight Allowed: XL1200T

MODEL	SPECIFICATIONS	
	lb	kg
XL1200T	403	183

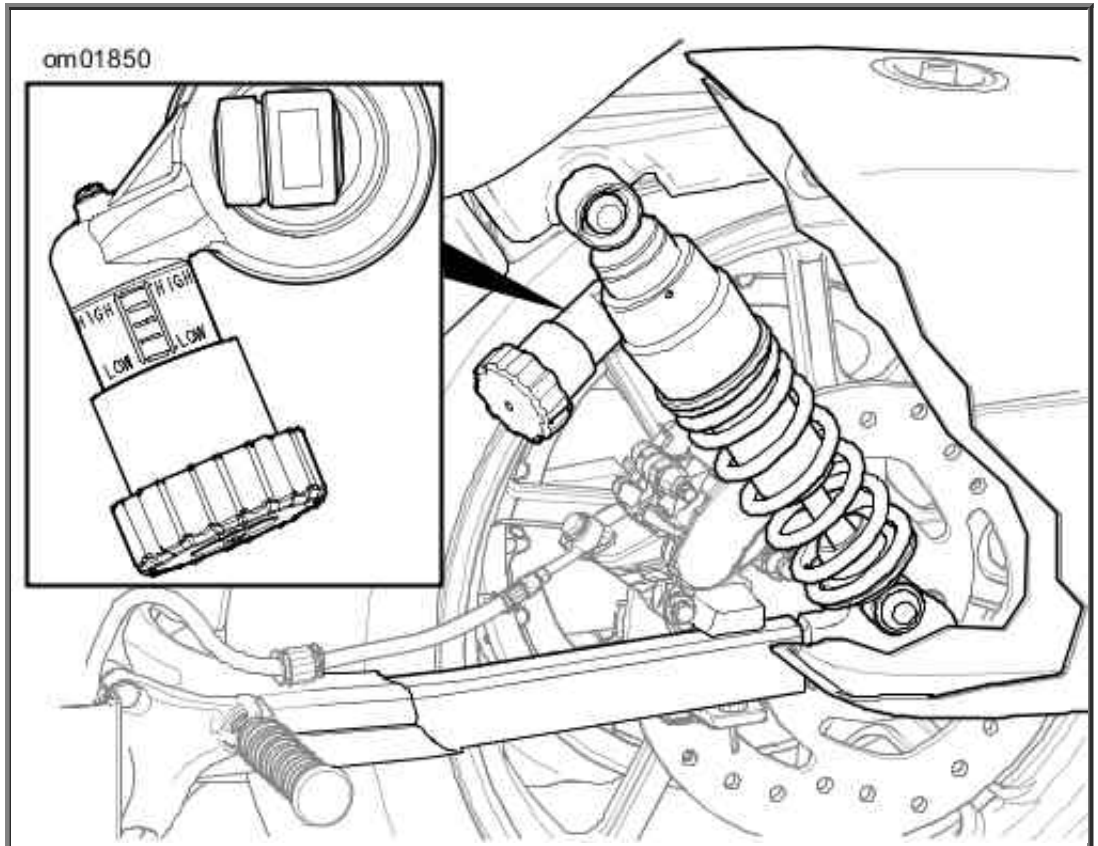

Preload Adjustment Knob: XL1200T

Recommended Turns: XL1200T Shock Preload Knob (two clicks equal one turn)

ADDITIONAL WEIGHT OF PASSENGER, CARGO AND ACCESSORIES																												
lb		0.0	7.5	15	22.5	30	37.5	45	52.5	60	67.5	75	82.5	90	97.5	105	112.5	120	127.5	135	142.5	150	157.5	165	172.5	180	187.5	195
kg		0.0	3.4	6.8	10.2	13.6	17	20.4	23.8	27.2	30.6	34	37.4	40.8	44.2	47.6	51	54.4	57.8	61.2	64.6	68	71.4	74.8	78.2	81.6	85	88.4
RIDER WEIGHT																												
lb	**kg**	Full turns of knob																										
100	45	0	0	0	0	0	0	0	0	0	1	2	3	4	5	6	7	8	9	10	11	12	13	14	15	16	17	18
110	50	0	0	0	0	0	0	0	0	1	2	3	4	5	6	7	8	9	10	11	12	13	14	15	16	17	18	HIGH
120	54	0	0	0	0	0	0	0	1	2	3	4	5	6	7	8	9	10	11	12	13	14	15	16	17	18	HIGH	
130	59	0	0	0	0	0	0	1	2	3	4	5	6	7	8	9	10	11	12	13	14	15	16	17	18	HIGH		
140	64	0	0	0	0	0	1	2	3	4	5	6	7	8	9	10	11	12	13	14	15	16	17	18	HIGH			
150	68	0	0	0	0	1	2	3	4	5	6	7	8	9	10	11	12	13	14	15	16	17	18	HIGH				
160	73	0	0	0	1	2	3	4	5	6	7	8	9	10	11	12	13	14	15	16	17	18	HIGH					
170	77	0	0	1	2	2	4	5	6	7	8	9	10	11	12	13	14	15	16	17	18	HIGH						

170	77	0	0	1	2	3	4	5	6	7	8	9	10	11	12	13	14	15	16	17	18	HIGH
180	82	0	1	2	3	4	5	6	7	8	9	10	11	12	13	14	15	16	17	18	HIGH	
190	86	1	2	3	4	5	6	7	8	9	10	11	12	13	14	15	16	17	18	HIGH		
200	91	2	3	4	5	6	7	8	9	10	11	12	13	14	15	16	17	18	HIGH			
210	95	3	4	5	6	7	8	9	10	11	12	13	14	15	16	17	18	HIGH				
220	100	4	5	6	7	8	9	10	11	12	13	14	15	16	17	18	HIGH					
230	104	5	6	7	8	9	10	11	12	13	14	15	16	17	18	HIGH						

Luggage

⚠WARNING

See the Accessories and Cargo section in your owner's manual. Improper cargo loading or accessory installation can cause component failure and adversely affect stability, handling and performance, which could result in death or serious injury. (00021b)

⚠WARNING

Do not exceed the motorcycle's Gross Vehicle Weight Rating (GVWR) or Gross Axle Weight Rating (GAWR). Exceeding these weight ratings can lead to component failure and adversely affect stability, handling and performance, which could result in death or serious injury. (00016f)

- GAWR is the sum of the weight of the motorcycle, accessories and the maximum weight of the rider, passenger and cargo that can be safely carried.
- GAWR is the maximum amount of weight that can be safely carried on each axle.
- The GVWR and GAWR are shown on the information label which is on the frame downtube in some destinations.

⚠WARNING

Improper loading of cargo or installation of accessories can affect motorcycle stability and handling, which could result in death or serious injury. (00095a)

- Keep cargo weight concentrated close to the motorcycle and as low as possible to minimize the change in the motorcycle's center of gravity. Distribute weight evenly on both sides of the vehicle. Do not load bulky items too far behind the rider or add weight to the handlebars or front forks. Do not exceed maximum load on the label within the luggage.
- Check that cargo is secure and does not shift while riding. Periodically recheck load.
- Close and lock luggage before riding or leaving the vehicle unattended.

Saddlebags: XL1200T

⚠WARNING

Do not exceed saddlebag weight capacity. Put equal weight in each bag. Too much weight in saddlebags can cause loss of control, which could result in death or serious injury. (00383a)

⚠WARNING

Do not allow passenger to use saddlebags as grab handles. Failure to use a grab strap, designed for passengers to hold onto when riding, could result in death or serious injury. (00081a)

NOTE:

Maximum saddlebag weight capacity is 7 lb 3.2 kg in each saddlebag.

Open

1. See Saddlebags: XL1200T. Unlock saddlebag with the key.
2. Press and release the latch button (1).
3. Lift the lid from the inner side of the saddlebag.

NOTE:

The docking points (2, 3) on the saddlebag mounts fit several P&A accessories (backrest, luggage rack, and so on). Follow all installation and usage instructions that include P&A accessories.

Close

1. See Saddlebags: XL1200T. Close the saddlebag lid.
2. Lock the saddlebag.

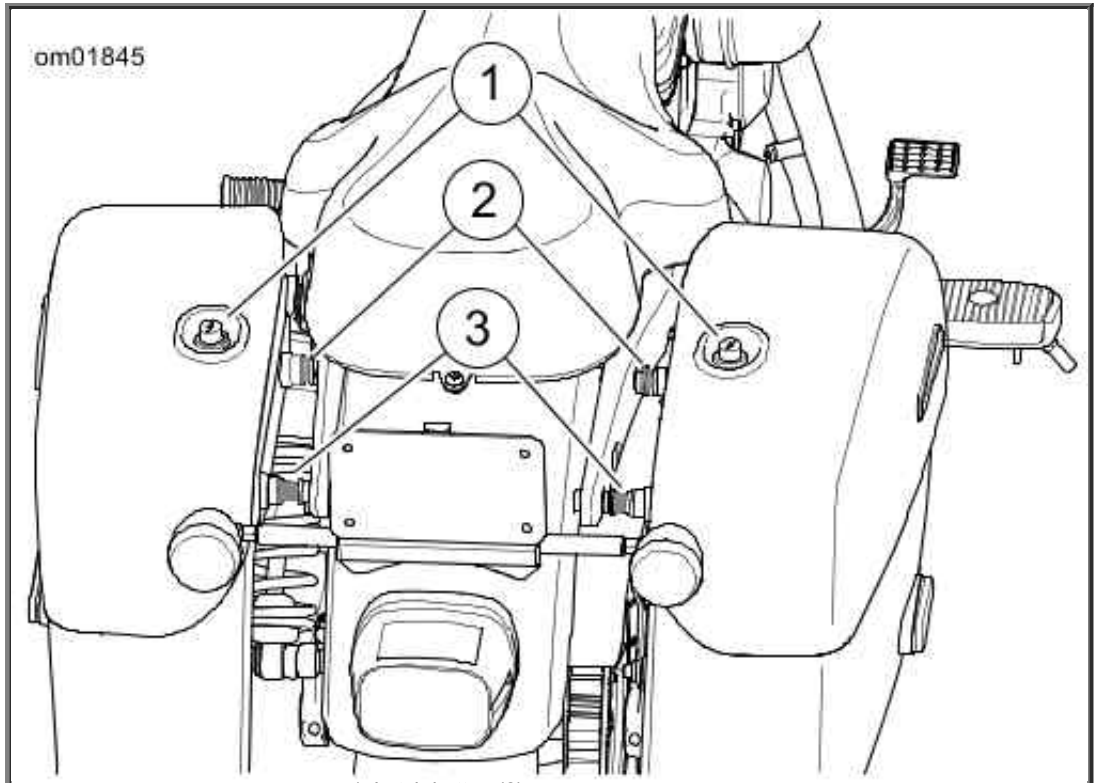

1. Latch button (2)
2. Front docking bushing (2)
3. Rear docking bushing (2)

Saddlebags: XL1200T

Side-Mounted License Plate

See Side-Mounted License Plate Assembly. Some models have a side-mounted license plate assembly. The license plate must be in the extended position during operation. This feature may not be available in all markets.

The side-mounted license plate assembly includes an LED lamp module. If the LED lamp fails, see a Harley-Davidson dealer for assembly replacement.

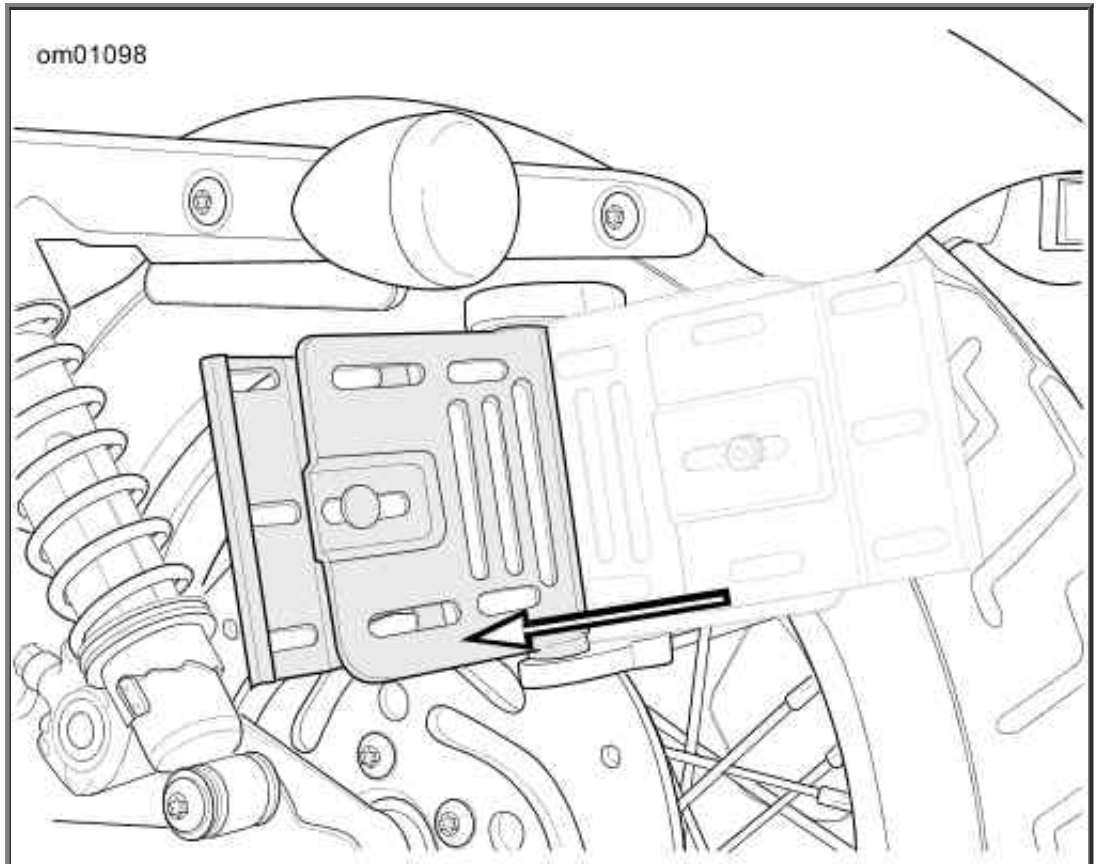

Side-Mounted License Plate Assembly

Security System

Security System

Components

The security system consists of a control module, a hands-free antenna mounted on the motorcycle and a hands-free fob carried by the rider.

After parking the motorcycle, set the OFF/RUN switch to OFF, and the security system will automatically **arm** within five seconds. While armed, the starter and ignition are disabled and the rider may leave the motorcycle knowing that the module will activate an alarm if someone tampers with the ignition or attempts to move the motorcycle.

When the fob is present, the security system will automatically **disarm** when the OFF/RUN switch is set to RUN, or when the TRIP switch is pressed (for accessory mode).

Options

See a Harley-Davidson dealer or www.harley-davidson.com for security system options.

- Smart Siren II.
- Security Pager Receiver II.
- Replacement Fobs.

FCC Regulations

FCC ID: L2C0027TR IC ID: 3432A-0027TR

FCC ID: L2C0028TR IC ID: 3432A-0028TR

This device complies with Part 15 of the FCC Rules and with RSS-210 of Industry Canada rules. Operation is subject to the following two conditions:

(1) This device may not cause harmful interference, and (2) This device must accept any interference received, including interference that may cause undesired operation.

NOTE:

Changes or modifications not expressly approved by the party responsible for compliance could void the user's authority to operate the equipment.

The term "IC:" before the radio certification number only signifies that Industry Canada technical specifications were met.

Security System Fob

Fob Assignment

See Fob: Security System. Key fobs are electronically assigned to the security system by a Harley-Davidson dealer so that the motorcycle can recognize a fob's unique signal. Only two fobs can be assigned at any one time.

Replacement fobs can be purchased from a dealership but can only be assigned to the motorcycle by a trained Harley-Davidson technician.

NOTES:

- *The reusable label found on the fob packaging lists the serial number of the fob. For reference, affix the label to a blank "NOTES" page in this Owner's Manual.*
- *The serial number of the fob is also found on the inside of the fob. See Fob Battery.*
- *The module will arm only if the fob has been assigned by a Harley-Davidson dealer and a Personal Identification Number (PIN) has been entered in the system. The PIN should be recorded on the Personal Information page in the front of this Owner's Manual and on the removable wallet card.*
- *Should the rider misplace the fob or if the fob fails, the rider can refer to the wallet card and use the PIN to manually disarm the system. See Arming and Disarming and Troubleshooting.*
- *The rider can change the PIN at any time. See Personal Identification Number (PIN).*

Riding with a Fob

- Always carry the fob when riding, loading, fueling, moving, parking or servicing the motorcycle. Carry the fob in a convenient pocket.
- Do not leave the fob attached to the handlebars or store the fob in a luggage compartment. Unintentionally leaving the fob with the motorcycle when it is parked prevents the system from activating the alarm.
- Do not ride with the fob stored in a metal case or with the fob closer than 3.0 in 76 mm to a mobile phone, PDA, display or other electronic device. Any electromagnetic interference may prevent the fob from disarming the system.
- For added security, always lock the fork and remove the key when parked. If the fob is within range and the motorcycle is unlocked, tampering with the motorcycle will not activate the alarm.

Riding without a Fob

If the motorcycle is ridden off without the fob, the odometer window temporarily displays "NO FOB." To restart a motorcycle without a fob, disarm the security system with the PIN.

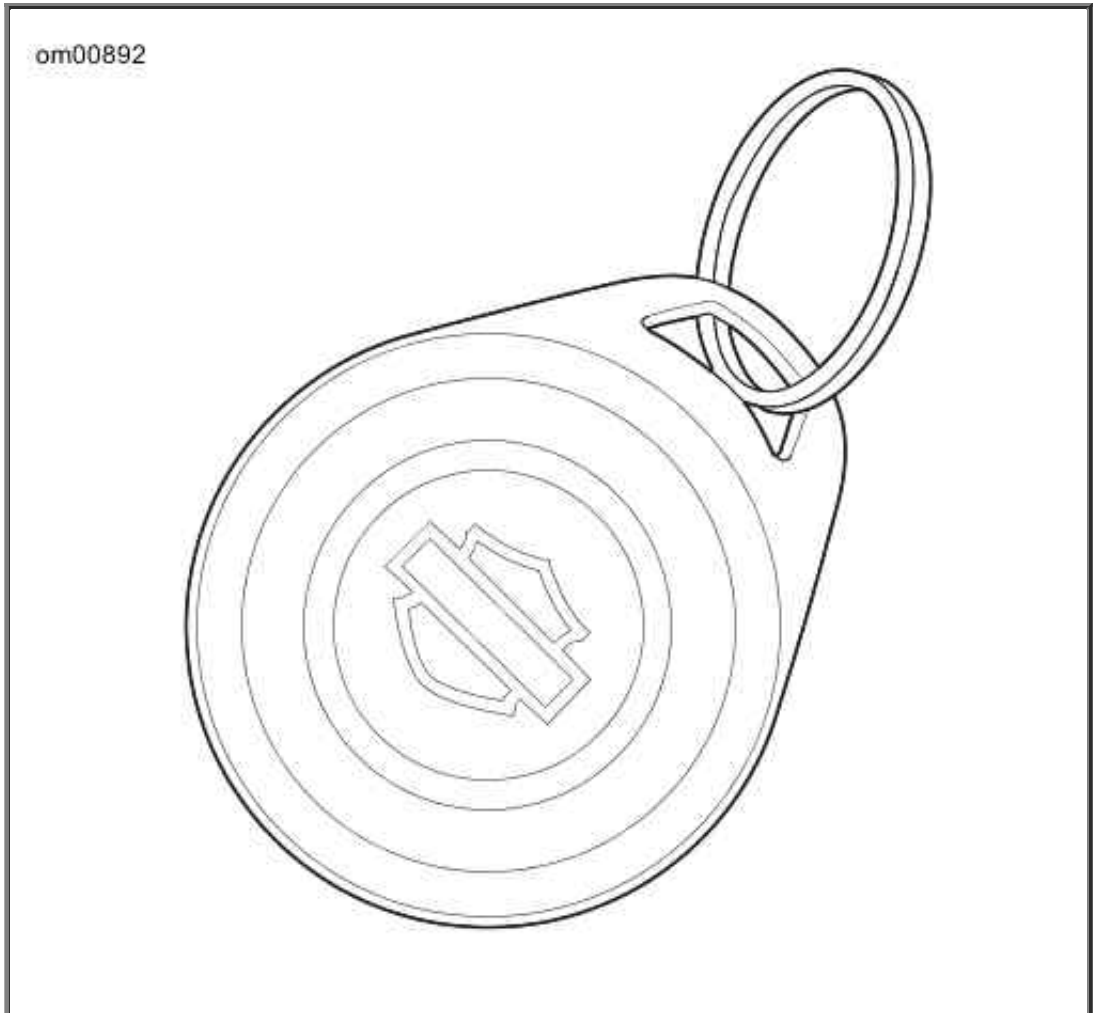

Fob: Security System

Personal Identification Number (PIN)

The personal identification number (PIN) is a number that can be used to disarm the security system. Use the PIN in case the assigned fob is misplaced, fails or if the fob cannot communicate with the motorcycle because of electromagnetic interference.

A PIN is a five-digit number (1-9, no zeros).

Changing the PIN

The rider can change the PIN at any time. Refer to Changing the PIN.

Changing the PIN

STEP NO.	ACTION	WAIT FOR CONFIRMATION	NOTES
1	Select a 5-digit (1 thru 9) PIN and record on the wallet card from Owner's Manual.		
2	With an assigned fob present, turn the OFF/RUN switch to **RUN**.		
3	Cycle the OFF/RUN switch twice: **OFF - RUN - OFF - RUN**.		
4	Press **left** turn signal switch **2 times**.	ENTER PIN scrolls through the odometer window.	
5	Press **right** turn signal switch **1 time** and release.	Turn signals will flash 3 times. Current PIN will appear in odometer. The first digit will be flashing.	
6	Enter first digit of new PIN by pressing and releasing the **left** turn signal switch until the selected digit appears.		
7	Press **right** turn signal switch **1 time** and release.	The new digit will replace the current in odometer window.	
8	Enter second digit of selected PIN by pressing and releasing the **left** turn signal switch until the selected digit is present.		
9	Press **right** turn signal switch **1 time** and release.	The new digit will replace the current in odometer window.	
10	Enter third digit of the selected PIN by pressing and releasing the **left** turn signal switch until the selected digit is present.		
11	Press **right** turn switch **1 time** and release.	The new digit will replace the current in odometer window.	
12	Enter fourth digit of new PIN by pressing and releasing the **left** turn signal switch until the selected digit is present.		
13	Press **right** turn switch **1 time** and release.	The new digit will replace the current in odometer window.	
14	Enter fifth digit of the new PIN by pressing and releasing the **left** turn signal switch until the selected digit is present.		
15	Press **right** turn switch **1 time** and release.	The new digit will replace the current in odometer window.	
16	Push the OFF/RUN switch to **OFF**.		Pushing the OFF/RUN switch to **OFF** stores the new PIN in the module.

Security Status Indicator

See Instrument Lamps. The security lamp in the speedometer face indicates the status of the security system.

- **Armed:** A lamp that blinks approximately every 3 seconds indicates that the system is armed.
- **Disarmed:** After the system disarms and the ignition is on, the lamp will remain illuminated for approximately four seconds and then turn off.
- **Service:** If the lamp remains lit continuously, see a Harley-Davidson dealer.

Arming and Disarming

Arming

When the motorcycle is parked and the OFF/RUN switch is set to OFF, the security system arms automatically within five seconds if no motion is detected. Even when the fob is present, the system will arm.

On arming, the turn signals will flash twice and the siren will chirp twice. While armed, the indicator lamp in the speedometer face will flash every three seconds.

NOTE:

The system must be in the Chirp Mode for the siren to chirp on arming or on disarming. See Siren Chirp Mode (Confirmation).

Disarming

Once disarmed, the rider may ride or move the motorcycle for parking, storage or service without setting off the alarm.

Fob: An armed security system is automatically disarmed when the fob is present and the OFF/RUN switch is set to RUN.

When the system disarms, the siren will chirp once and the security indicator lamp will illuminate for a solid four seconds and then turn off.

NOTE:

On any motion, like lifting the motorcycle up off of its jiffy stand, the system will electronically "poll" for the presence of the fob. If the fob is present, the system disarms.

Personal Identification Number (PIN): If the fob is misplaced or if the present fob fails to communicate, the system can be disarmed with the Personal Identification Number (PIN). Refer to Entering a PIN to Disarm Security System.

Disarming with a PIN

NOTES:

- *At any time during a PIN disarm, if the fob is brought within range of the motorcycle, the security system will disarm when the system receives the coded signal from the fob.*
- *If a mistake is made while entering PIN, wait two minutes before another disarming attempt.*
- *The security system will remain disarmed until the OFF/RUN switch is set to OFF.*

Entering a PIN to Disarm Security System

STEP	ACTION	WAIT FOR CONFIRMATION	NOTES

STEP NO.	ACTION	WAIT FOR CONFIRMATION	NOTES
1	If necessary, verify the current 5-digit PIN.		Should be recorded on wallet card.
2	Push the **OFF/RUN switch** to **RUN**.	The odometer window display will show ENTER PIN.	
3	Press and release the **left** turn signal switch.	In the odometer window, a flashing 1 will appear.	
4	Increment the digit by tapping the **left** turn signal until the odometer window displays the first digit of the PIN.	The first digit in the odometer will be the first digit in the PIN.	
5	Press **right** turn switch **1 time.**	The first digit is stored and the next digit will flash.	Serves as enter key.
6	Increment the second digit using the **left** turn switch until the digit reaches the second digit of the PIN.	The second digit in the odometer will be the second digit in the PIN.	
7	Press **right** turn switch **1 time**.	The second digit is stored and the next digit will flash.	Serves as enter key.
8	Increment the third digit using the **left** turn switch until it reaches the third digit of the PIN.	The third digit in the odometer will be the third digit in the PIN.	
9	Press **right** turn switch **1 time**.	The third digit is stored and the next digit will flash.	Serves as enter key.
10	Increment the fourth digit using the **left** turn switch until it reaches the fourth digit of the PIN.	The fourth digit in the odometer will be the fourth digit in the PIN.	
11	Press **right** turn switch **1 time.**	The fourth digit is stored and the next digit will flash.	Serves as enter key.
12	Increment the fifth digit using the **left** turn switch until it reaches the fifth digit of the PIN.	The fifth digit in the odometer will be the fifth digit in the PIN.	
13	Press **right** turn switch **1 time**.	The fifth digit is stored. The security system indicator lamp stops blinking.	Smart Security System is disarmed.

Alarm

Warnings

Once armed, if the motorcycle is moved or lifted up off of its jiffy stand and the fob is not present, the alarm will warn the operator with three alternate flashes of the turn signals and a chirp of the siren.

Within four seconds, if the motorcycle is back on its jiffy stand and no further motion is detected, the system will remain armed without activating the alarm.

If the motorcycle motion continues, the system will issue a second warning four seconds after the first.

NOTE:

During warnings and alarms, the starter motor and the ignition circuits remain disabled.

Alarm Activation

If the security system is still detecting motion after a second warning, the system will activate the alarm.

When activated, the security system will:

- Alternately flash the four turn signals.
- Sound the siren.

Duration: The alarm will stop within 30 seconds and if no motion is detected, the alarm will not restart.

However, if motorcycle motion continues the system will repeat the 30 second alarm and recheck for motion. The alarm will repeat this 30 second alarm cycle for five minutes (10 cycles) or until the alarm is deactivated.

NOTE:

The alarm will also activate the LED, vibration or audible modes of an optionally purchased Harley-Davidson Security Pager. The range of a pager can be up to 0.5 mi 0.8 km . See a Harley-Davidson dealer for details.

Alarm Deactivation

- **Key fob:** Bring the fob to the motorcycle. After the module identifies that the fob is present, the system will terminate the alarm.
- **PIN entry:** Enter the PIN to deactivate the alarm. If an error is made while entering the PIN, wait until the alarm is between cycles to enter the PIN.

Siren Chirp Mode (Confirmation)

Chirp Mode

Vehicles with a siren can be set to chirp upon arming and disarming. In chirp mode, the siren sounds two chirps when arming, and a single chirp when disarming.

Chirpless Mode

In chirpless mode, the siren does not chirp on arming or disarming.

The siren still provides warning chirps and sounds the alarm if the motorcycle is moved without the fob present.

Switching Modes

Perform the following to switch between chirp and chirpless modes.

1. With security fob present, set the OFF/RUN switch to RUN.
2. When the security lamp turns off, set the OFF/RUN switch to OFF.
3. When the security lamp turns off (but before the turn signals flash twice), immediately set the OFF/RUN switch to RUN.
4. When the security lamp turns off, immediately set the OFF/RUN switch to OFF.
5. When the security lamp turns off (but before the turn signals flash twice), immediately set the OFF/RUN switch to RUN. The system changes mode. The siren chirps or remains silent accordingly.

Transport Mode

It is possible to arm the security system without enabling the motion detector for one ignition cycle. This allows the vehicle to be picked up and moved in an armed state. The motorcycle cannot be turned on or started while in transport mode until the fob is present.

To Enter Transport Mode

1. With the fob present, set the OFF/RUN switch to RUN.
2. Set the OFF/RUN switch to OFF.
3. Simultaneously press both the left and the right turn signal switches. This must be done within five seconds of turning the OFF/RUN switch to OFF.
4. The turn signals flash once, then flash three times to indicate that the system is armed in transport mode.

To Exit Transport Mode

With the fob present, set the OFF/RUN switch to RUN to disarm the system and exit transport mode.

Storage and Service Departments

Long-Term Parking

To maintain arming, store the fob beyond the range of the antenna. The antenna range is approximately 5 ft 1.5 m . Have the fob present before moving parked motorcycle.

If the motorcycle will not be operated for several months, such as during the winter season, see Motorcycle Storage.

Service Departments

When the motorcycle is left at a Harley-Davidson dealer, there are two options:

1. Leave an assigned fob with the dealer.
2. To maintain possession of the fob, ask the dealer to disable the system for service (service mode) before leaving the dealership.

Fob Battery

Replacing the Battery

Replace the fob battery every year.

1. See Fob Battery. Slowly turn a thin blade in the thumbnail slot (1) on the side of the fob to separate the two halves.
2. Remove the battery (2) and discard.
3. Install a **new** battery (Panasonic 2032 or equivalent) with the positive side down.
4. Align the two halves of the fob. Snap the halves together.

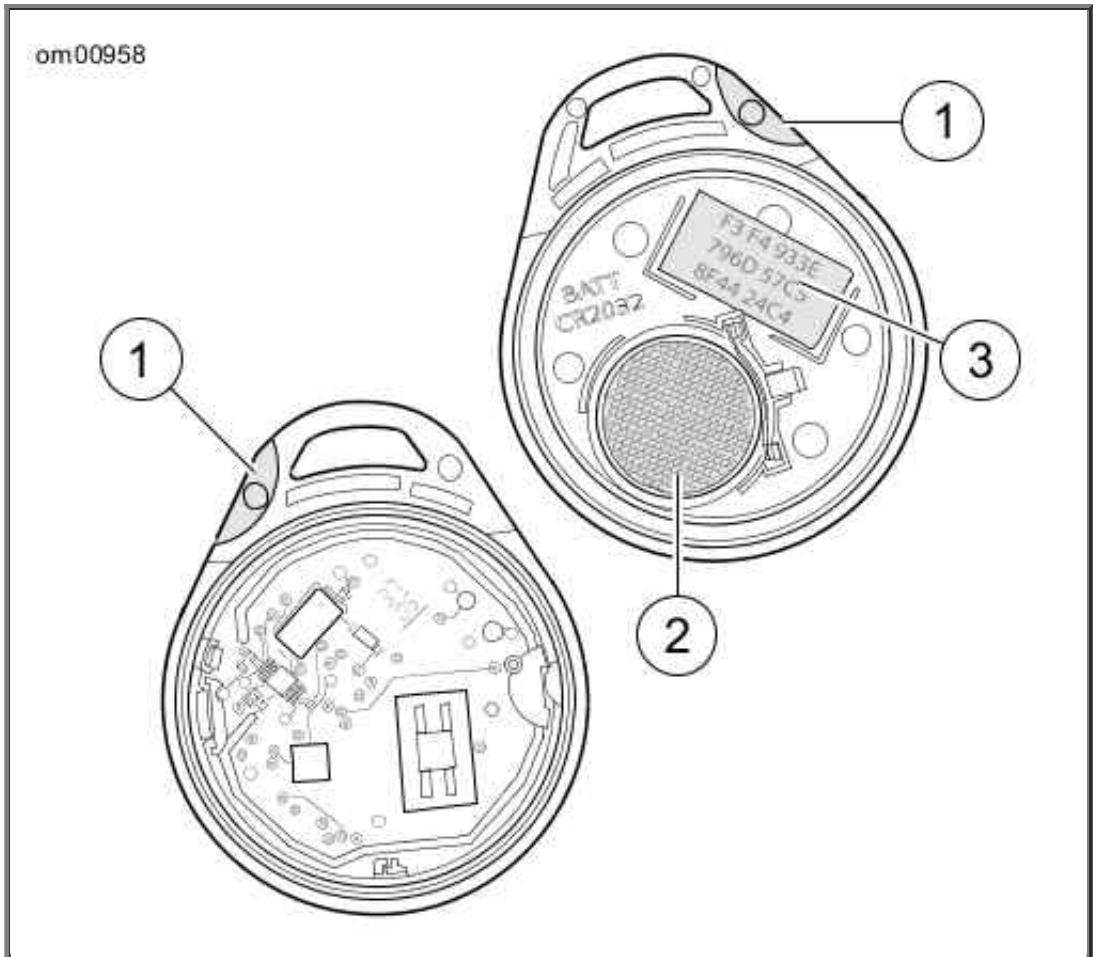

1. Thumbnail slot
2. Battery
3. Fob serial number

Fob Battery

Disconnecting Power

Optional Siren

When disconnecting the battery or removing the main fuse, perform the following steps to prevent the optional siren from sounding.

1. Verify that the fob is present.

2. Set the OFF/RUN switch to RUN.
3. Pull the main fuse from its holder or disconnect the battery.

NOTE:

Set the OFF/RUN switch back to OFF before installing main fuse.

Troubleshooting

Security Lamp

If the security lamp stays illuminated while riding, see a Harley-Davidson dealer.

Fob

If the security system continues to actuate warnings and alarms with the fob present, check for:

1. **Electromagnetic interference:** Other electronic devices, power lines, or other electromagnetic sources can cause the security system to operate inconsistently.
    a. Verify that the fob is not in a metal enclosure or within 3.0 in 76 mm of any other electronic devices.
    b. Place the fob on the seat and set the OFF/RUN switch to RUN. After the system disarms, return the fob to a convenient location.
    c. Move motorcycle at least 15 ft 5 m from the spot of interference.
2. **Discharged fob battery:** Use the PIN to disarm the system. Replace the battery. See Fob Battery.
3. **Damaged fob:** Use the PIN to disarm the motorcycle. Replacement fobs are available for purchase from a Harley-Davidson dealer.

Siren

- If the siren does not chirp two or three times on a valid arming command from the security module, the siren is either in the Chirpless Mode, not connected, not working, or the siren wiring was opened or shorted while the siren was disarmed.
- If the siren is armed and the internal siren battery is dead, shorted, disconnected, or has been charging for a period longer than 24 hours, the siren will respond with three chirps on arming instead of two.
- The internal siren battery may not charge if the vehicle's battery is less than 12.5 volts.
- If the siren enters the self-driven mode where it is powered from the siren's internal 9 volt battery, the turn signal lamps may or may not alternately flash. If the security module activates the siren, the turn signal lamps will alternately flash. If the siren has been armed and a security event occurs, and the siren is in self-driven mode, the siren will alarm 20-30 seconds and then turn off for 5-10 seconds. This alarm cycle will be repeated ten times if the siren is in the self-driven mode.

Operation

Operating Recommendations

⚠WARNING

Motorcycles are different from other vehicles. They operate, steer, handle and brake differently. Unskilled or improper use could result in loss of control, death or serious injury. (00556c)

⚠WARNING

Do not tow a disabled motorcycle. Towing can adversely affect stability and handling, which could result in death or serious injury. (00017a)

- Take a rider training course.
- Read the Owner's Manual before riding, adding accessories or servicing.
- Wear a helmet, eye protection and protective clothing.
- Never tow a trailer.

CAUTION

Do not run the engine at extremely high RPM with clutch disengaged or transmission in neutral. Running an engine at high RPM can result in engine damage. (00177a)

CAUTION

Do not exceed the maximum safe RPM specified below under any conditions. Exceeding the maximum safe engine RPM can result in equipment damage. (00248a)

- The maximum recommended safe engine speed is 6000 rpm.
- Do not idle engine unnecessarily for more than a few minutes with motorcycle standing still.

If motorcycle will not be ridden for a period of two weeks or more with security system armed, it is recommended to connect an automatic constant monitoring battery charger/tender to maintain battery charge. If security system will not be armed, remove the 40 A main fuse. See Fuses.

CAUTION

Air-cooled engines require air movement over the cylinders and heads to maintain proper operating temperature. Extended periods of idling or parade duty can overheat the engine, resulting in serious engine damage. (00178a)

An engine running long-distance at high speed must be given closer than ordinary attention to avoid overheating and possible engine damage.

NOTE:

Have the engine checked regularly and keep it well tuned.

This applies particularly to a motorcycle equipped with windshield and fairing.

WARNING

When riding on wet roads, brake efficiency and traction are greatly reduced. Failure to use care when braking, accelerating or turning on wet roads can cause loss of control, which could result in death or serious injury. (00041a)

WARNING

Continuous use of brake causes overheating and reduced efficiency, which could result in death or serious injury. (00042a)

NOTE:

When descending upon a long, steep grade, downshift. Use engine compression together with intermittent application of both brakes to slow the motorcycle.

Break-in Riding Rules

The First 500 Miles (800 Kilometers)

The sound design, quality materials, and workmanship that are built into your new Harley-Davidson will give you optimum performance right from the start.

To allow your engine to wear-in its critical parts, we recommend that you observe the riding rules provided below for the first 500 mi 800 km .

1. During the first 50 mi 80 km of riding, keep the engine speed below 3000 rpm in any gear. Do not lug the engine by running or accelerating at very low rpm, or by running at high rpm longer than needed for shifting or passing.
2. Up to 500 mi 800 km , vary the engine speed and avoid operating at any steady engine speed for long periods. Engine speed up to 3500 rpm in any gear is permissible.
3. Drive slowly and avoid fast starts at wide open throttle until the engine has warmed up.
4. Avoid lugging the engine by not running the engine at very low speeds in higher gears.
5. Avoid hard braking. Break-in new brakes with moderate use for the first 100 mi 160 km .

Pre-Riding Checklist

⚠WARNING

Read the CONTROLS AND INDICATORS section before riding your motorcycle. Failure to understand the operation of the motorcycle could result in death or serious injury. (00043a)

Always inspect motorcycle condition before riding.

⚠WARNING

Stop the engine when refueling or servicing the fuel system. Do not smoke or allow open flame or sparks near gasoline. Gasoline is extremely flammable and highly explosive, which could result in death or serious injury. (00002a)

⚠WARNING

Avoid spills. Slowly remove filler cap. Do not fill above bottom of filler neck insert, leaving air space for fuel expansion. Secure filler cap after refueling. Gasoline is extremely flammable and highly explosive, which could result in death or serious injury. (00028a)

⚠WARNING

Use care when refueling. Pressurized air in fuel tank can force gasoline to escape through filler tube. Gasoline is extremely flammable and highly explosive, which could result in death or serious injury. (00029a)

1. Check fuel level. Add fuel if necessary.
2. Adjust mirrors to proper riding positions.
3. Check engine oil level. Add oil if necessary.
4. Check controls to make sure that they operate properly. Operate the front and rear brakes, throttle, clutch and shifter. All controls should operate freely without binding.
5. Check steering for proper operation by turning the handlebars through the full operating range. Handlebars should turn smoothly without binding.

⚠WARNING

Be sure tires are properly inflated, balanced, undamaged, and have adequate tread. Inspect your tires regularly and see a Harley-Davidson dealer for replacements. Riding with excessively worn, unbalanced, improperly inflated, overloaded or damaged tires can lead to tire failure and adversely affect stability and handling, which could result in death or serious injury. (00014b)

6. Check tire condition, pressure and motorcycle loading. Incorrect pressure and excessive loading can lead to tire or wheel failure, and can affect

handling and stability. For correct tire pressures, refer to Specified Tires.

⚠WARNING

Be sure headlamp, tail and stop lamp and turn signals are operating properly before riding. Poor visibility of rider to other motorists can result in death or serious injury. (00478b)

7. Test all switches and lights for proper operation.
8. Check for any fuel, oil or hydraulic fluid leaks. Check for coolant leaks on applicable vehicles.
9. Check drive belt for wear or damage.
10. Service your motorcycle as necessary.

Starting the Engine

⚠WARNING

Shift transmission to neutral before starting engine to prevent accidental movement, which could result in death or serious injury. (00044a)

CAUTION

The engine should be allowed to run slowly for 15-30 seconds. This will allow the engine to warm up and let oil reach all surfaces needing lubrication. Failure to comply can result in engine damage. (00563b)

NOTE:

Do not open the throttle before starting the engine.

1. Turn the ignition on.
    a. **Keyed ignition:** Turn key to IGNITION.
    b. **Keyless ignition:** Bring an assigned fob within range.
2. See Right Handlebar Controls. Switch the OFF/RUN switch to the RUN (1) position.

    NOTE:

    The engine lamp will light for approximately 4 seconds. You will hear the fuel pump purr for approximately 2 seconds as it operates to fill the fuel lines with gasoline.
3. Though the illuminated green neutral lamp indicates that the transmission is in neutral, verify neutral by rolling the motorcycle back and forth with the clutch lever out.
4. Squeeze the clutch lever against the handlebar.

5. Press the start switch (2).
6. When the engine has started, you can operate your motorcycle as you normally would after raising the jiffy stand.

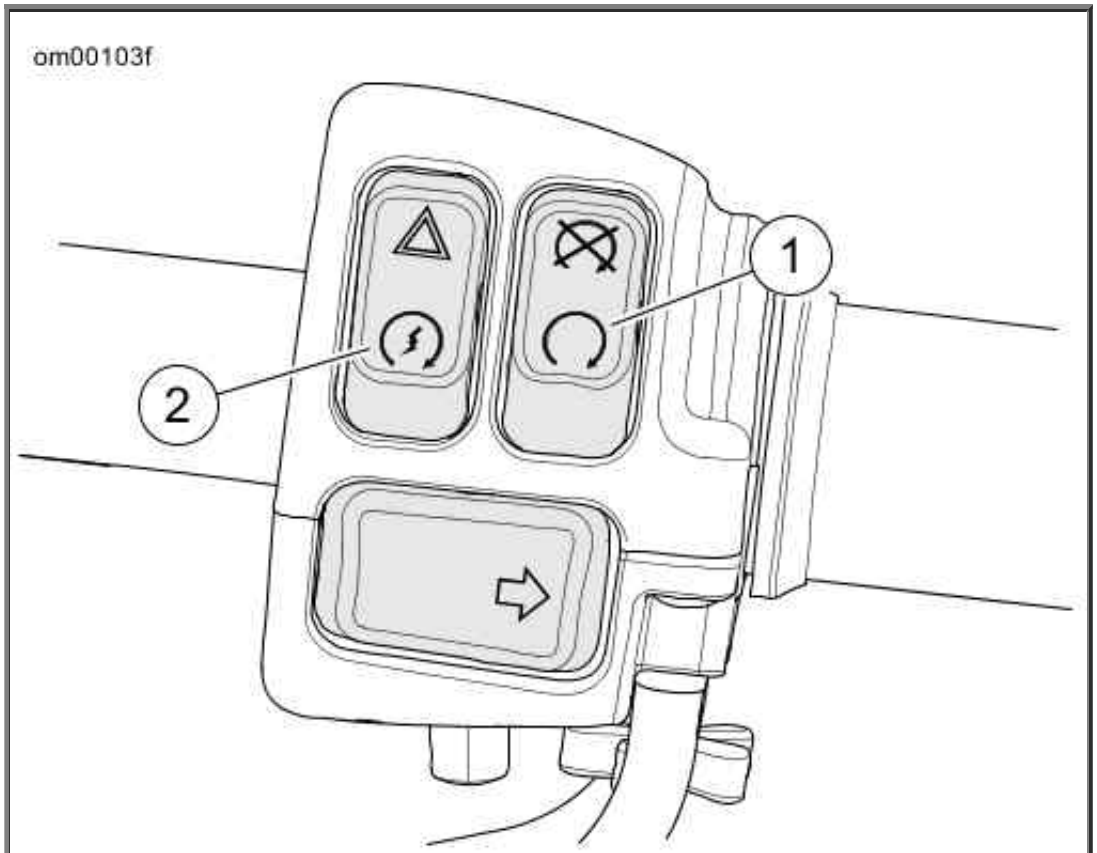

1. Engine run switch
2. Engine start switch

Right Handlebar Controls

Starting after Tip Over

WARNING

If tip occurs, check all controls for proper operation. Restricted control movement can adversely affect the performance of the brakes, clutch or ability to shift, which could result in loss of vehicle control and death or serious injury. (00350a)

After a tip over, reset the ignition before starting the engine.

NOTE:

The word "tIP" appears in the odometer window.

1. Set the motorcycle upright.
2. **Keyed ignition:** Reset the ignition by turning the ignition switch OFF-IGNITION.
3. **Keyless ignition:** Reset the ignition by turning the OFF/RUN switch OFF-RUN.

Shifting Gears

CAUTION

The clutch must be fully disengaged before attempting a gear shift. Failure to fully disengage the clutch can result in equipment damage. (00182a)

Stopped, Engine Off

Squeeze in the clutch lever to fully disengage the clutch. Gears may not engage because the transmission shafts are not turning and shifter components are not lined up. Rock the motorcycle backward and forward while lightly pressing on the shift lever.

Starting from a Stop

NOTE:

Always start the engine with the transmission in neutral. Always start forward motion in first gear.

1. With the engine running and the jiffy stand retracted, pull the clutch hand lever in against the handlebar grip to fully disengage the clutch.
2. Press the gear shift lever down to the end of its travel and release. The transmission is now in first gear.
3. Ease out the clutch lever and at the same time, gradually open the throttle.

Upshift (Acceleration)

See Upshift Sequence: Sportster Models. Engage the next higher gear when the motorcycle reaches the shifting speed. Refer to Upshift (Acceleration) Road Speeds*.

Upshift (Acceleration) Road Speeds*

GEAR CHANGE	mph	km/h
First to second	15	25

First to second	15	25
Second to third	25	40
Third to fourth	35	55
Fourth to fifth	45	70
* The listed speeds are recommendations. Individual riding styles can determine gear change road speeds.		

1. Close the throttle.
2. Squeeze in the clutch lever to fully disengage the clutch.
3. Lift the gear shift lever up to the end of its travel and release.
4. Ease out the clutch lever and gradually open the throttle.
5. Repeat the previous steps to engage remaining gears.

NOTES:

- *Disengage the clutch completely before each gear change.*
- *Partially open the throttle so the engine does not drag when the clutch lever is released.*

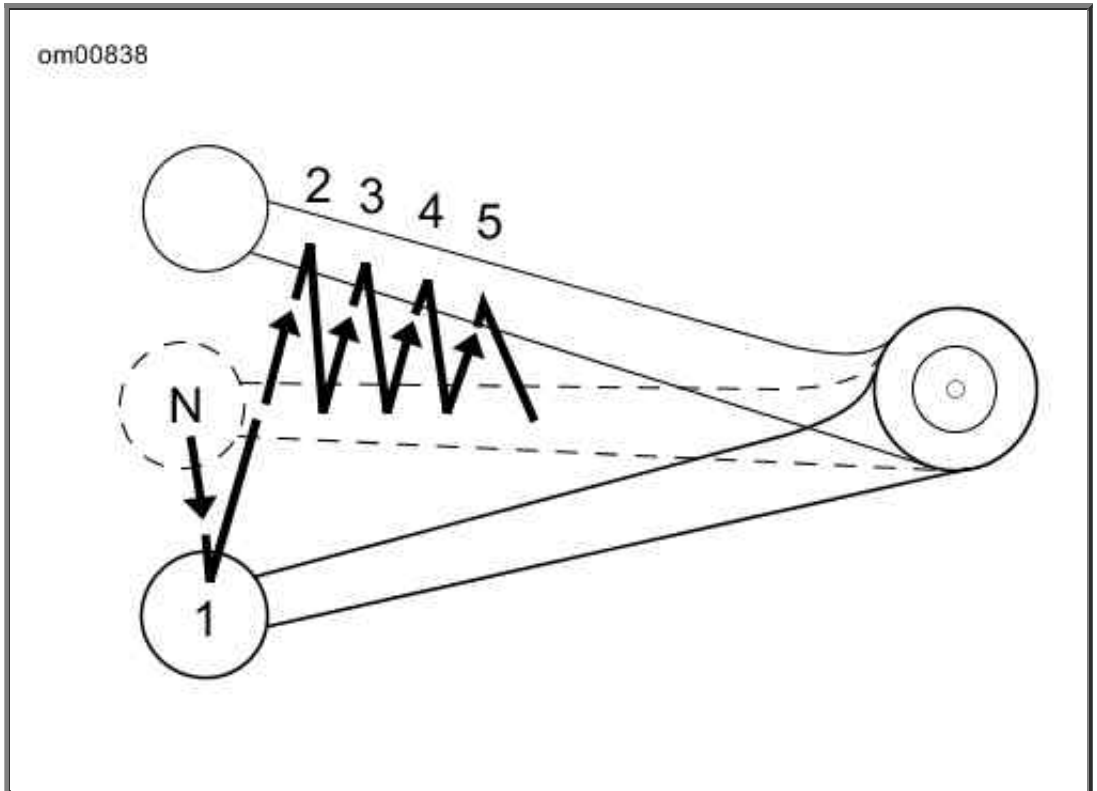

Upshift Sequence: Sportster Models

Downshift (Deceleration)

⚠WARNING

Do not downshift at speeds higher than those listed. Shifting to lower gears when speed is too high can cause the rear wheel to lose traction and lead to loss of vehicle control, which could result in death or serious injury. (00045b)

See Downshift Sequence: Sportster Models. When speed decreases, as when climbing a hill or slowing for a turn, shift to the next lower gear. Refer to Downshift (Deceleration) Road Speeds*.

Downshift (Deceleration) Road Speeds*

GEAR CHANGE	mph	km/h
Fifth to fourth	40	65
Fourth to third	30	50

Third to second	20	30
Second to first	10	15
* The listed speeds are recommendations. Individual riding styles can determine gear change road speeds.		

NOTE:

The shifting points shown in the table are recommendations. Vehicle owners may determine that their individual shifting patterns may differ from those stated and are appropriate for individual riding styles.

1. Close the throttle.
2. Squeeze in the clutch lever to fully disengage the clutch.
3. Press the gear shift lever down to the end of its travel and release.
4. Ease out the clutch lever and gradually open the throttle.
5. Repeat the previous steps to engage remaining gears.

NOTES:

- *Disengage the clutch completely before each gear change.*
- *Partially open the throttle so the engine does not drag when clutch lever is released.*

CAUTION

Shift to neutral before stopping engine. Shifting mechanism can be damaged by shifting gears while engine is stopped. (00183a)

The gear shifter mechanism permits shifting the transmission to neutral from either first or second gear.

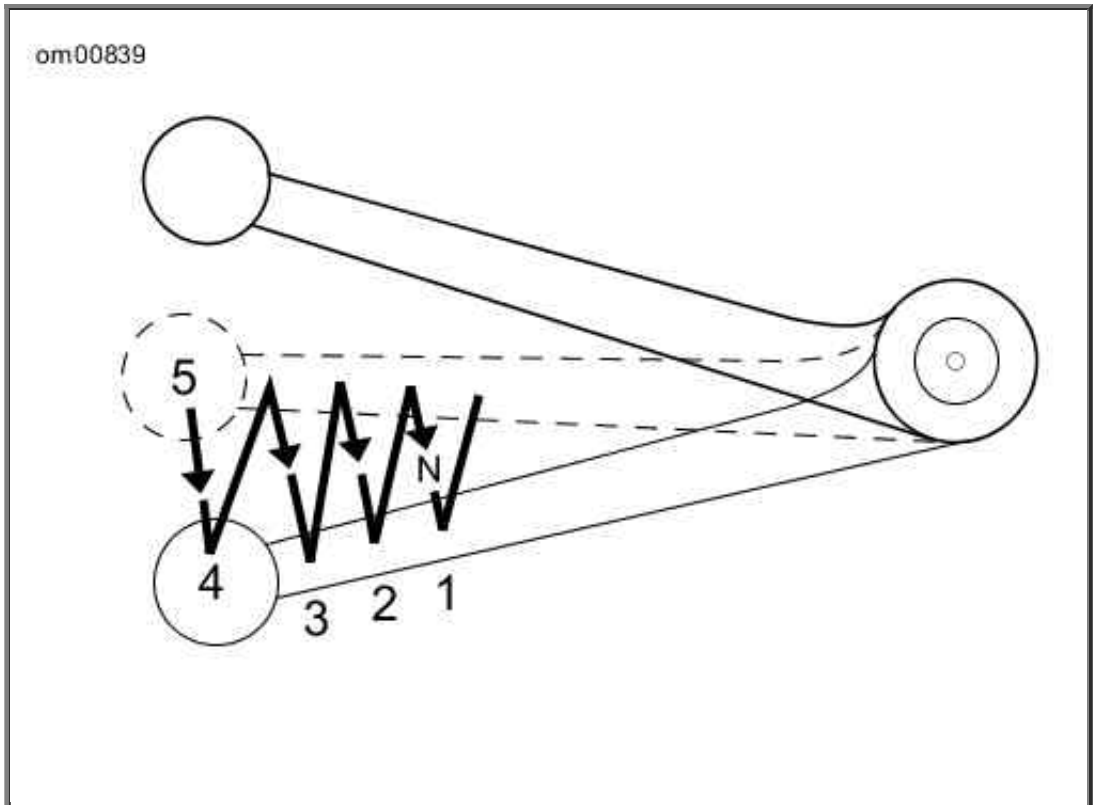

Downshift Sequence: Sportster Models

Stopping the Engine

NOTE:

Keyed ignition: *If the engine stalls or is stopped, turn the ignition switch to OFF to prevent battery discharge until the engine is restarted.*

1. **Keyed ignition:**
    a. Stop the engine by turning the engine OFF/RUN switch to OFF.
    b. Turn the ignition switch to OFF.
2. **Keyless ignition:** Stop the engine by turning the engine OFF/RUN switch to OFF.

Maintenance and Lubrication

Safe Operating Maintenance

⚠WARNING

Perform the service and maintenance operations as indicated in the regular service interval table. Lack of regular maintenance at the recommended intervals can affect the safe operation of your motorcycle, which could result in death or serious injury. (00010a)

CAUTION

When lifting a motorcycle using a jack, be sure jack contacts both lower frame tubes where down tubes and lower frame tubes converge. Never lift by jacking on cross-members, oil pan, mounting brackets, components or housings. Failure to comply can cause serious damage resulting in the need to perform major repair work. (00586d)

Good maintenance creates a safe motorcycle. A careful check of certain equipment must be made after periods of storage. Also, frequently inspect the motorcycle between the regular service intervals to determine if additional maintenance is necessary.

Check the following items:

1. Tires for correct pressure, abrasions or cuts.
2. Belt and primary chain for proper tension, wear or damage.
3. Brakes, steering and throttle for responsiveness and freedom from binding.
4. Brake fluid level and condition. Hydraulic lines and fittings for leaks. Also, check brake pads and discs for wear.
5. Cables for fraying or crimping and free operation.
6. Engine oil and primary chaincase/transmission fluid levels.
7. Headlamp, tail lamp, stop lamp and turn signals for proper operation.

Break-In Maintenance

NOTE:

The performance of new motorcycle initial service is required to keep your new motorcycle warranty in force and for proper emissions system operation.

After a new motorcycle has been ridden 1000 mi 1600 km , visit an authorized Harley-Davidson dealer for initial service. Refer to Regular Service Intervals: 2016 Sportster Models.

Disposal and Recycling

Help protect our environment! Many communities maintain facilities for recycling used fluids, plastics and metals. Dispose of or recycle used oil, lubricants, fuel, coolant, brake fluid and batteries in accordance with local regulations. Many Harley-Davidson parts and accessories are made of plastics and metals which can also be recycled.

Engine Lubrication

⚠CAUTION

Prolonged or repeated contact with used motor oil may be harmful to skin and could cause skin cancer. Promptly wash affected areas with soap and water. (00358b)

⚠CAUTION

If engine oil is swallowed, do not induce vomiting. Contact a physician immediately. In case of contact with eyes, immediately flush with water. Contact a physician if irritation persists. (00357d)

CAUTION

Do not switch lubricant brands indiscriminately because some lubricants interact chemically when mixed. Use of inferior lubricants can damage the engine. (00184a)

Engine oil is a major factor in the performance and service life of the engine. Use the proper grade of oil for the lowest temperature expected before the next oil change. Refer to Recommended Engine Oils.

This motorcycle was originally equipped with GENUINE HARLEY-DAVIDSON H-D 360 MOTORCYCLE OIL 20W50. H-D 360 is the preferred oil under normal operating conditions. If operation under extreme cold or heat are expected, refer to Recommended Engine Oils for alternative choices.

If H-D 360 is not available, add oil certified for diesel engines. Acceptable designations include: CH-4, CI-4 and CJ-4. The preferred viscosities, in descending order are: 20W50, 15W40 and 10W40.

At the first opportunity, see an authorized dealer to change back to 100 percent Harley-Davidson oil.

Recommended Engine Oils

TYPE	VISCOSITY	RATING	LOWEST AMBIENT TEMPERATURE	COLD-WEATHER STARTS BELOW 50 °F (10 °C)
Screamin' Eagle SYN 3 Full Synthetic Motorcycle Lubricant	SAE 20W50	HD 360	Above 30 °F -1 °C	Excellent
Genuine Harley-Davidson H-D 360 Motorcycle Oil	SAE 20W50	HD 360	Above 40 °F 4 °C	Good
Genuine Harley-Davidson H-D 360 Motorcycle Oil	SAE 50	HD 360	Above 60 °F 16 °C	Poor
Genuine Harley-Davidson H-D 360 Motorcycle Oil	SAE 60	HD 360	Above 80 °F 27 °C	Poor
Genuine Harley-Davidson H-D 360 Motorcycle Oil	SAE 10W40	HD 360	Below 40 °F 4 °C	Excellent

Checking and Adding Oil

Removing and Replacing Oil Filler Cap

1. Park the motorcycle on level ground.
2. See Filler Cap Location. Remove the filler cap from the oil tank.
    a. Press straight down on the filler cap and release. The cap will pop up.
    b. Pull up on the filler cap while turning counterclockwise one-quarter turn as if removing the filler cap.
3. Wipe dipstick clean.

   NOTE:

   See Filler Cap Slots. Align tabs on oil tank filler neck to slots (1, 2) on dipstick.
4. Install the dipstick into the tank.
    a. Turn the filler cap clockwise one-quarter turn as if screwing the filler cap into tank. When the filler cap stops turning, it is seated.
    b. Press down on the filler cap until it snaps in place, flush with the top of the oil tank cover.

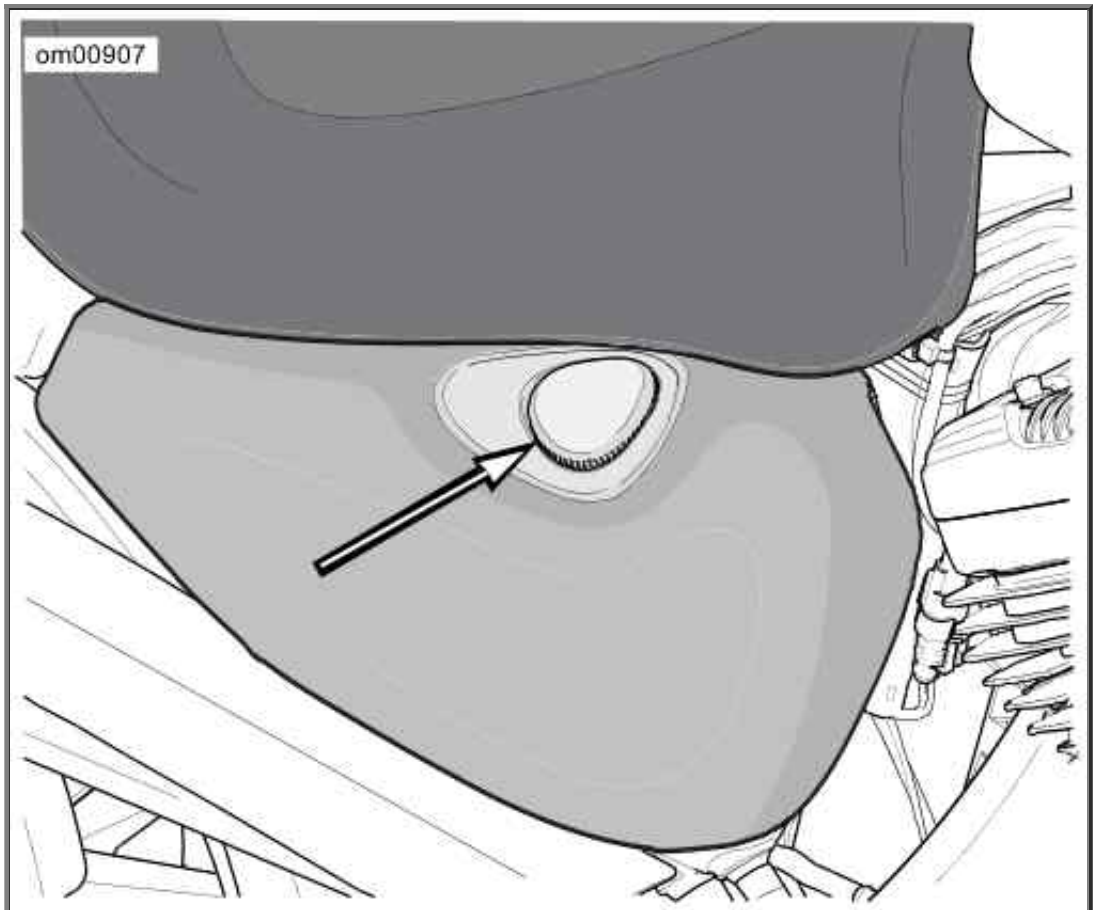

Filler Cap Location

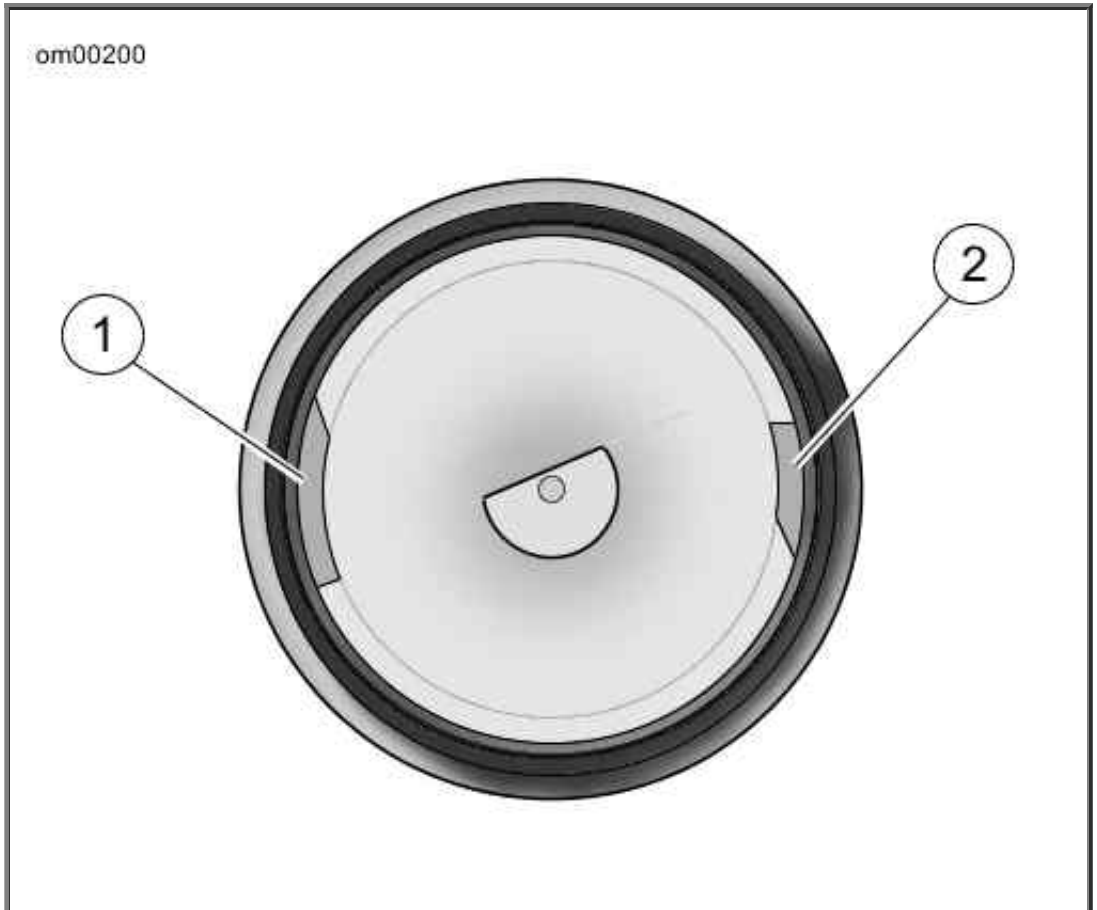

1. Wide slot
2. Narrow slot

Filler Cap Slots

Oil Level Cold Check

NOTES:

- *Check engine oil level at each complete fuel refill.*
- *An accurate engine oil check can only be made with the engine at operating temperature (Hot Check).*

1. Park the motorcycle on level ground.
2. Remove the filler cap and wipe the dipstick clean. Install the oil filler cap in tank.
3. Remove oil filler cap again and visually check for oil in the tank.

4. If oil is not visible in the tank, install the filler cap.

NOTE:

If the oil pressure lamp stays lit after starting engine, immediately shut off the engine.

5. Start and idle the engine for 30 seconds. Stop the engine.
6. Remove oil filler cap and visually check for oil in the tank.

CAUTION

Do not overfill oil. Doing so can result in oil carryover to the air cleaner leading to equipment damage and/or equipment malfunction. (00190b)

NOTE:

Use only recommended oil. Recommended viscosity depends upon ambient temperature. Refer to Recommended Engine Oils.

7. If there is no oil visible in the tank, add oil until it is present on the bottom of the dipstick.
8. When oil is present on the bottom of the dipstick, perform a hot check.

Oil Level Hot Check

---

1. Run the engine until the engine oil is at operating temperature.
2. Idle the motorcycle on the jiffy stand for one to two minutes. Turn off engine.
3. Park the motorcycle on level ground.
4. Remove the filler cap. Wipe dipstick clean. Install the filler cap in the tank.

CAUTION

Do not allow hot oil level to fall below Add/Fill mark on dipstick. Doing so can result in equipment damage and/or equipment malfunction. (00189a)

CAUTION

Do not overfill oil. Doing so can result in oil carryover to the air cleaner leading to equipment damage and/or equipment malfunction. (00190b)

NOTES:

- *Use only recommended oil. Recommended viscosity depends upon ambient temperature. Refer to Recommended Engine Oils.*
- *The oil tank has a built-in pressure relief valve. If the oil tank is overfilled, excessive pressure is created in the oil tank. The pressure relief valve opens to relieve the pressure and prevent damage to the oil tank. Excessive oil due to overfilling is forced out the pressure relief valve when it*

opens.

5. See Dipstick. Remove the filler cap. Check engine oil level.
    a. **Below the lower mark:** Add only enough oil until the level reads between the upper and lower marks.
    b. **Between the upper and lower marks:** It is safe to operate the motorcycle.
    c. **Above the upper mark:** Drain the oil until the level reads between the upper and lower marks.
6. Install the filler cap.
7. If oil was added, remove the filler cap to verify the engine oil level in the oil tank. Do not fill oil tank to a level above upper mark on the dipstick. Install the filler cap.

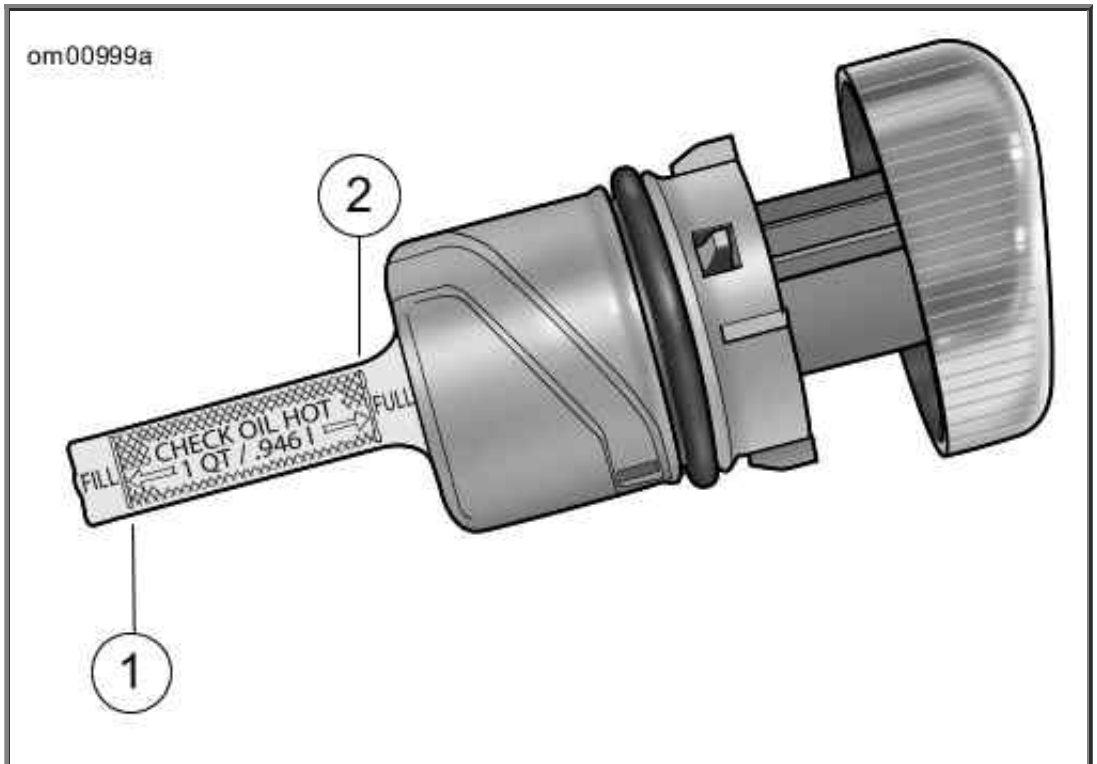

1. Lower mark (FILL)
2. Upper mark (FULL)

Dipstick

Changing Oil and Filter

Draining Oil Tank

⚠WARNING

Be sure that no lubricants or fluids get on tires, wheels or brakes when changing fluid. Traction can be adversely affected, which could result in loss of control of the motorcycle and death or serious injury. (00047d)

CAUTION

Do not switch lubricant brands indiscriminately because some lubricants interact chemically when mixed. Use of inferior lubricants can damage the engine. (00184a)

Completely drain oil tank of used oil at scheduled service intervals. Refill with fresh oil. Refer to Regular Service Intervals: 2016 Sportster Models.

NOTES:

- *Change oil at specified intervals in normal service at warm or moderate temperatures.*
- *Change engine oil at shorter intervals in cold weather or in severe operating conditions. See Winter Lubrication.*
- *Change engine oil at shorter intervals if ridden extremely hard, used in competition or driven on dusty roads.*
- *Always change oil filter when changing engine oil.*

1. Run motorcycle until engine is at normal operating temperature.
2. Remove dipstick from oil tank.

   NOTE:

   The drain pan must hold approximately 3.0 qt 2.8 L .

3. Place a drain pan directly under the oil tank.
4. See Drain Hose. Pull clip (1) from frame tube.
5. Direct drain hose (2) in front of bracket (3) into drain pan.
6. Loosen clamp (4). Remove plug (5) from end of hose.

   NOTE:

   Completely drain engine oil from oil tank.

7. Allow oil to drain.
8. Install plug into hose.
9. Tighten clamp to 6-10 in-lbs (0.7-1.1 Nm).
10. Route drain hose along frame tube.
11. Clip hose to frame.

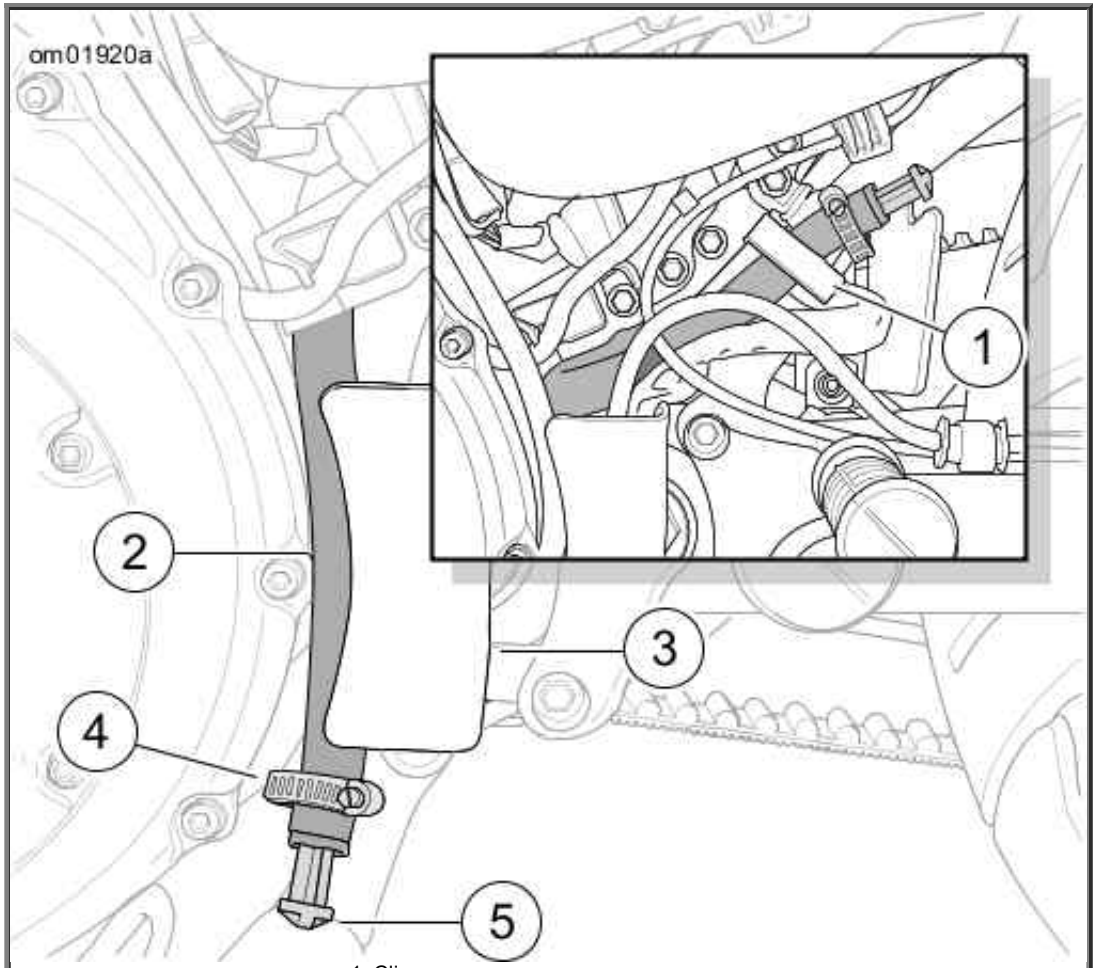

1. Clip
2. Drain hose
3. Bracket
4. Clamp
5. Plug

Drain Hose

Removing Oil Filter

1. Place a drain pan under the oil filter.

CAUTION

Use Harley-Davidson oil filter wrench for filter removal. This tool can prevent damage to crankshaft position sensor and/or sensor cable. (00192b)

NOTE:

See Oil Filter. Turn filter (1) counterclockwise to remove from mount (2).

2. Remove oil filter using HARLEY-DAVIDSON OIL FILTER WRENCH HD-42311 or HARLEY-DAVIDSON OIL FILTER WRENCH HD-44067-A .
3. Drain engine oil. Discard oil filter.
4. Clean any oil spills off crankcase and frame.

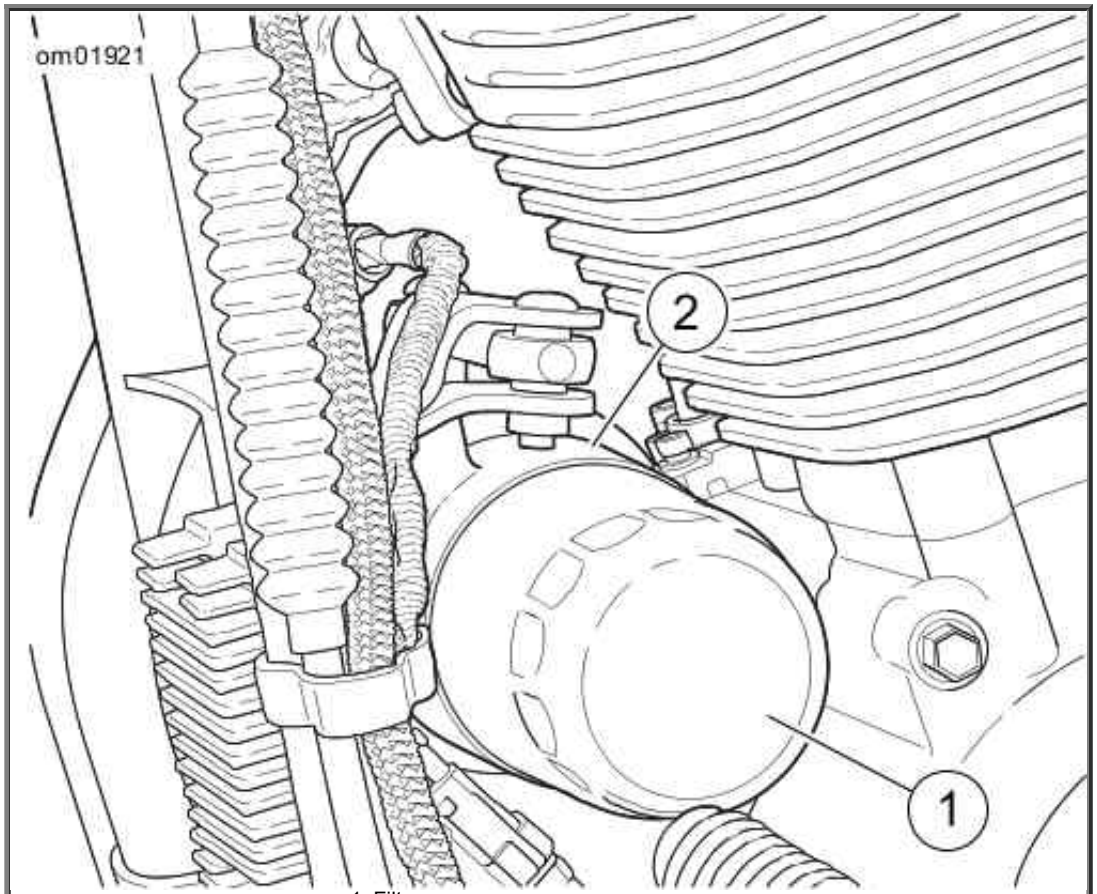

1. Filter
2. Mount

Oil Filter

Installing Oil Filter

NOTE:

To build oil pressure on engine startup, partially fill oil filter.

1. Pour about 4 fl oz 120 mL of fresh, clean engine oil into **new** oil filter.
2. Allow time for oil to soak into filter element.
3. See Installing Oil Filter. Wipe oil filter mount contact surface (1) with a clean cloth. Surface must be smooth and free of debris or old gasket material.
4. Apply a thin film of oil to contact surface of the oil filter mount and filter gasket (2) of **new** oil filter.

   NOTE:

   *Do not use oil filter wrench to install **new** oil filter.*

5. Install **new** oil filter.
   a. Screw filter onto adapter (3) until gasket contacts the gasket contact surface.
   b. Hand-tighten one-half to three-quarters turn to secure the oil filter.

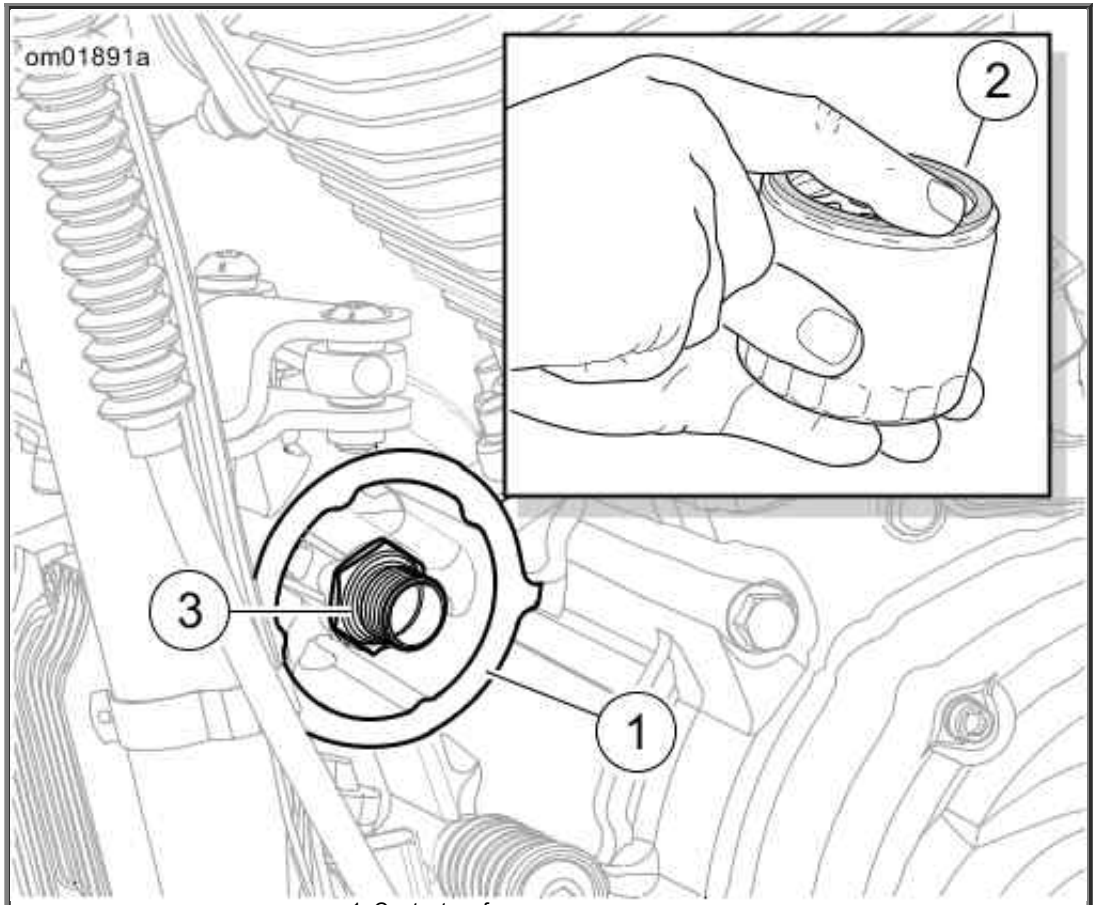

1. Contact surface
2. Filter gasket
3. Adapter

Installing Oil Filter

Refilling Oil Tank

CAUTION

Do not overfill oil. Doing so can result in oil carryover to the air cleaner leading to equipment damage and/or equipment malfunction. (00190b)

NOTE:

Use the proper grade of oil for the lowest temperature expected before the next oil change. Refer to Recommended Engine Oils.

1. Pour 2.0 qt 1.9 L of oil into engine oil tank.
2. Install dipstick in oil tank. Seat cap.
3. See Oil Pressure Indicator. Verify oil pressure.
    a. Start engine.
    b. Verify that the oil pressure indicator turns off at 1000 rpm or above.
    c. Turn off engine.
4. Perform engine oil level hot check.
5. Start engine and carefully check for oil leaks around drain plug and oil filter.

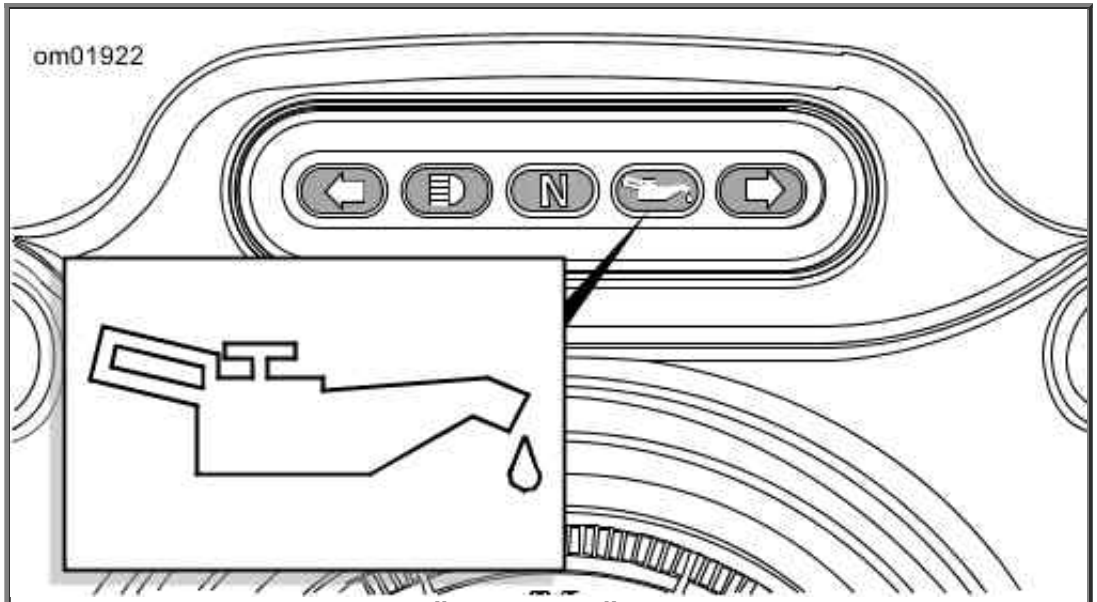

Oil Pressure Indicator

Winter Lubrication

Change engine oil often in colder climates. If motorcycle is frequently used for trips less than 15 mi 24 km , in ambient temperatures below 60 °F 16 °C , reduce oil change intervals to 1500 mi 2400 km .

NOTE:

Lower ambient temperatures require more frequent oil changes.

Water vapor is a normal by-product of combustion. During cold-weather operation, some water vapor condenses to liquid form on the cool surfaces inside the engine. In freezing weather this water becomes slush or ice. If the engine is not warmed to operating temperature, accumulated slush or ice blocks the oil lines and causes engine damage. Over time, water will accumulate, mix with the engine oil and form a sludge that is harmful to the engine.

If the engine is allowed to warm to normal operating temperature, most of the water evaporates and exits through the crankcase breather.

Transmission Lubrication

NOTE:

When checking the transmission lubricant level, motorcycle should be standing STRAIGHT UP, not leaning on the jiffy stand. Keep motorcycle upright for a short time to equalize lubricant level in the transmission compartments.

Drain and refill the transmission with fresh lubricant at proper intervals. For best results, drain lubricant while hot. Refer to Regular Service Intervals: 2016 Sportster Models.

⚠WARNING

Be sure that no lubricants or fluids get on tires, wheels or brakes when changing fluid. Traction can be adversely affected, which could result in loss of control of the motorcycle and death or serious injury. (00047d)

CAUTION

When draining or adding lubricant, do not allow dirt, debris or other contaminants to enter the engine. (00198a)

CAUTION

Do not overfill the primary chaincase with lubricant. Overfilling can cause rough clutch engagement, incomplete disengagement, clutch drag and/or difficulty in finding neutral at engine idle. (00199b)

Check Lubricant Level

1. Run motorcycle until engine is at normal operating temperature.
2. Position motorcycle straight up.

⚠WARNING

To prevent accidental vehicle start-up, which could cause death or serious injury, remove main fuse before proceeding. (00251b)

3. Turn off ignition switch and STOP/RUN switch.
4. **XL models with mid-mount controls:** See Mid-Mount Rider Footrest Assembly. Remove screws and detach the rider footrest support bracket from the left side of the vehicle.

5. See Primary Cover. Remove screws with washers from clutch inspection cover. Remove clutch inspection cover from primary cover.

   NOTE:

   The filler access is the clutch inspection cover.

6. See Chaincase Lubricant Level. Verify that lubricant level is even with bottom of clutch diaphragm spring.

   NOTE:

   Add only enough of FORMULA+ TRANSMISSION AND PRIMARY CHAINCASE LUBRICANT through clutch inspection cover opening until the lubricant reaches the bottom of clutch diaphragm spring.

7. Install the clutch inspection cover.

   a. Install **new** quad ring.

   b. Verify that quad ring is fully seated in groove of primary cover.

   c. Install clutch inspection cover. Secure with six screws.

   d. Tighten in a crosswise pattern to 90-120 in-lbs (10.2-13.6 Nm).

8. If the left footrest assembly was removed, install support bracket with two screws. Tighten screws to 45-50 ft-lbs (61.0-67.8 Nm).

9. Start engine. Check for any lubricant leaks.

10. Turn off engine.

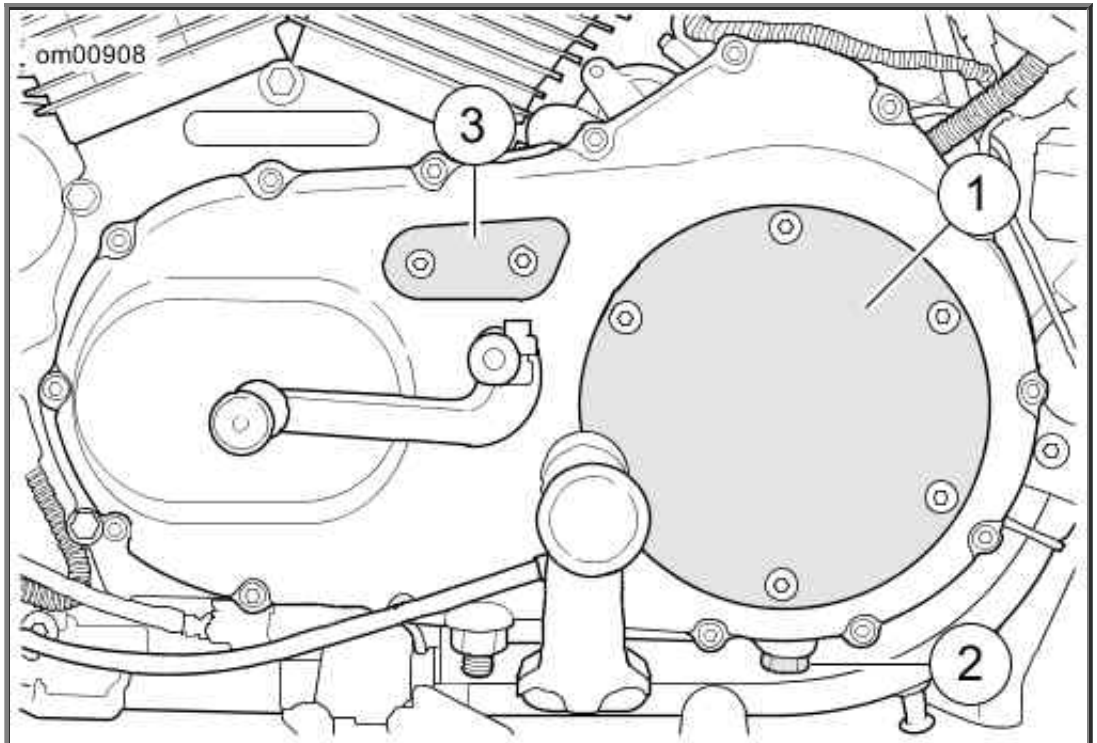

1. Clutch inspection cover
2. Drain plug
3. Primary chain inspection cover

Primary Cover

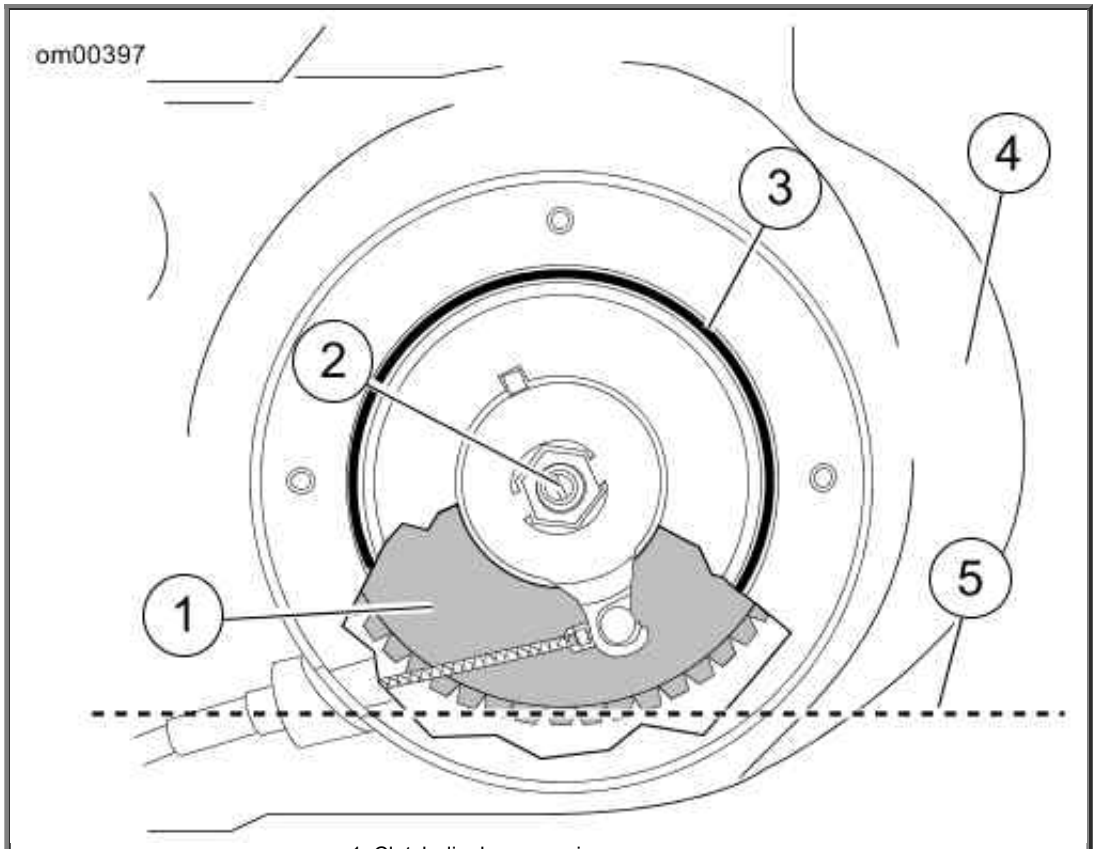

1. Clutch diaphragm spring
2. Clutch adjusting screw
3. Quad ring
4. Primary cover
5. Chaincase lubricant level

Chaincase Lubricant Level

Changing Lubricant

1. Run motorcycle until engine is at normal operating temperature.
2. When the engine reaches normal operating temperature, park motorcycle on jiffy stand. This allows the chaincase lubricant to drain out of transmission.

⚠WARNING

To prevent accidental vehicle start-up, which could cause death or serious injury, remove

main fuse before proceeding. (00251b)

3. Turn off ignition switch and STOP/RUN switch.
4. See Primary Cover. Position a suitable container under transmission drain plug (2).
5. The drain plug is located under the clutch, on the underside of the primary cover. Remove drain plug and drain lubricant.
6. Position the motorcycle STRAIGHT UP and LEVEL. This allows more fluid to drain from the clutch compartment.

CAUTION

Do not over-tighten filler or drain plug. Doing so could result in a lubricant leak. (00200b)

NOTE:

Dispose of lubricant in accordance with local regulations.

7. Clean magnetic drain plug. Replace drain plug O-ring if damaged.
8. Apply LOCTITE 565 PIPE SEALANT WITH TEFLON to the drain plug. Install drain plug. Tighten to 14-30 ft-lbs (19.0-40.7 Nm).
9. **XL models with mid-mount controls:** See Mid-Mount Rider Footrest Assembly. Remove screws (2) and detach the rider footrest support bracket (1) from the left side of the vehicle.
10. See Primary Cover. Remove screws with washers from clutch inspection cover (1). Remove clutch inspection cover from primary cover.

    NOTE:

    The filler access is the clutch inspection cover.

11. See Chaincase Lubricant Level. Add 1.00 qt 0.95 L of FORMULA+ TRANSMISSION AND PRIMARY CHAINCASE LUBRICANT (Part No. 98851-05 qt) through clutch inspection cover opening until the lubricant reaches the bottom of clutch diaphragm spring.
12. Install the clutch inspection cover.
    a. Install **new** quad ring (3).
    b. Verify that quad ring is fully seated in groove of primary cover.
    c. Install clutch inspection cover. Secure with six screws.
    d. Tighten in a crosswise pattern to 90-120 in-lbs (10.2-13.6 Nm).
13. If the left footrest assembly was removed, install support bracket with two screws. Tighten to 45-50 ft-lbs (61.0-67.8 Nm).
14. Start engine. Check for any lubricant leaks.
15. Turn off engine.

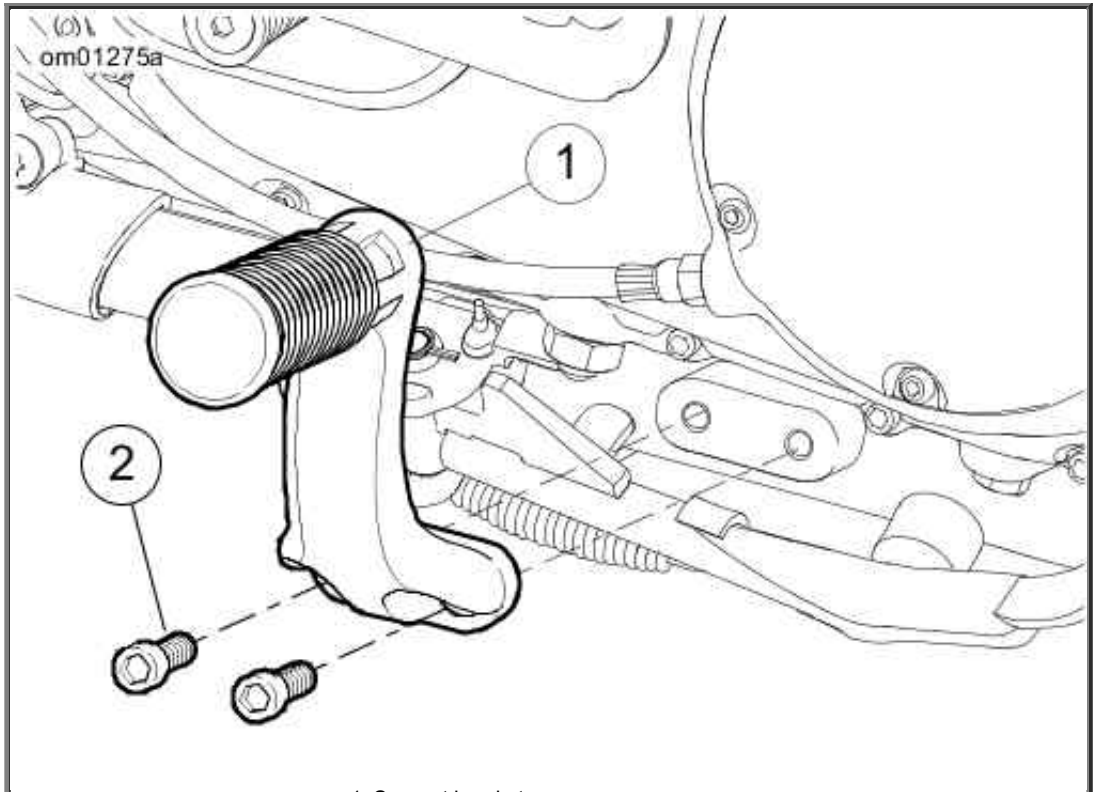

1. Support bracket
2. Screws (2)

Mid-Mount Rider Footrest Assembly

Primary Chain Free Play

Primary Chain Inspection

Inspect primary chain free play at proper intervals and adjust as necessary. Loose chains cause the motorcycle to jerk when running at low speed, and chain and sprockets wear excessively. If this happens, see a Harley-Davidson dealer.

⚠WARNING

To prevent accidental vehicle start-up, which could cause death or serious injury, remove main fuse before proceeding. (00251b)

1. Remove main fuse. See Fuses.

2. See Primary Chain Inspection Cover. Remove the two screws and the primary chain inspection cover.
3. See Primary Chain Free Play. Check primary chain tension by measuring free play.
    a. Measure free play through chain inspection cover opening.
    b. Rotate engine to move primary chain to a different position on sprockets.
    c. Measure free play several times, each time with primary chain moved so that the measurement is taken with sprockets rotated to the tightest chain position.
4. The tightest measurement in previous step must be within the specifications. Adjust as necessary. Refer to Primary Chain Free Play Specifications.

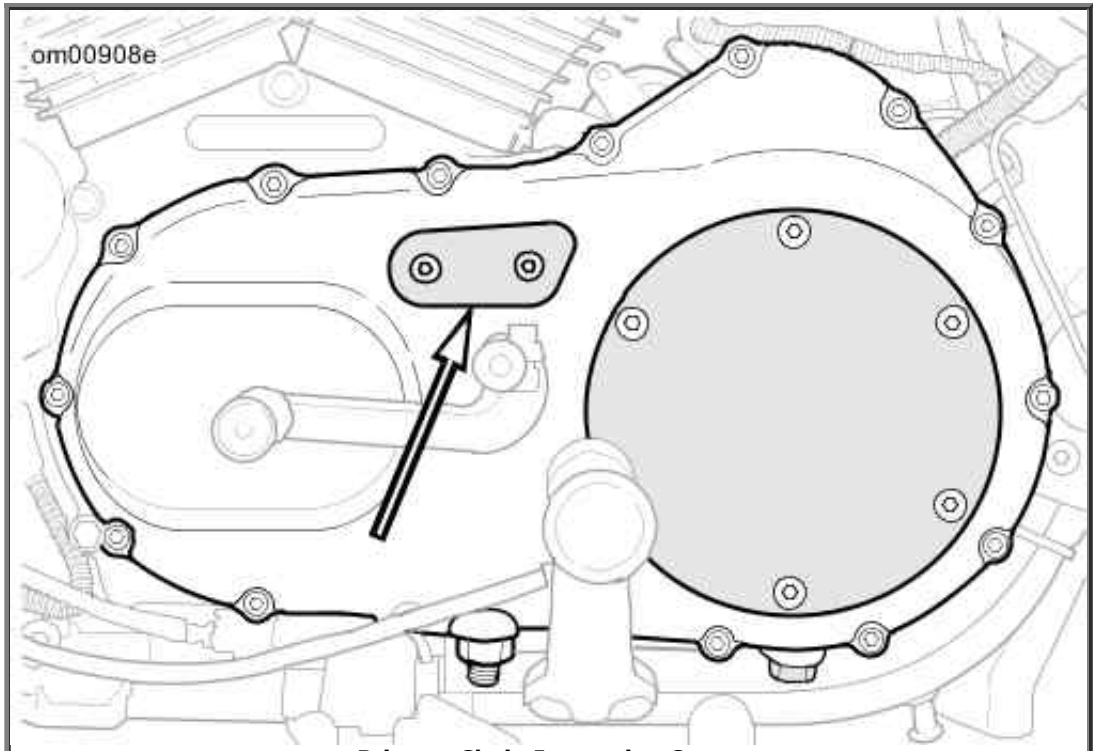

Primary Chain Inspection Cover

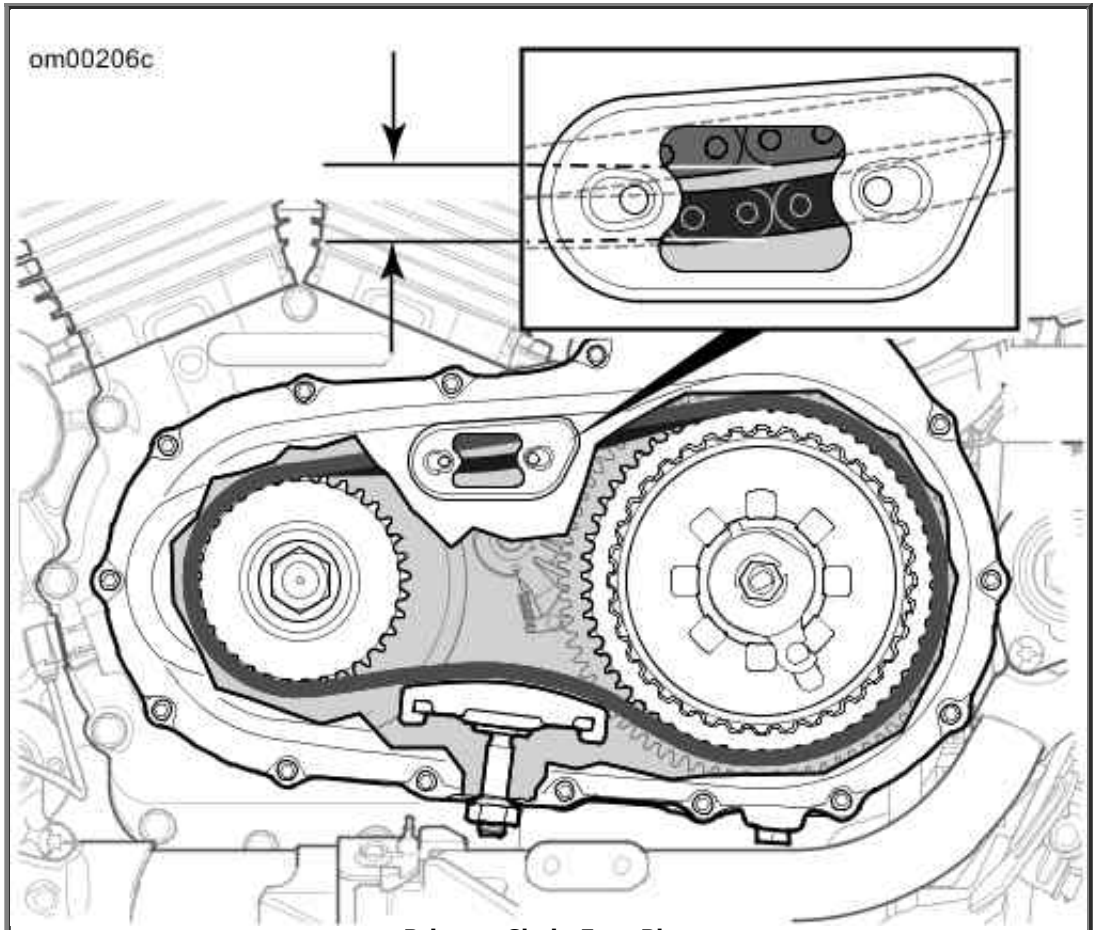

Primary Chain Free Play

Primary Chain Free Play Specifications

ENGINE	in	mm
Cold	3/8-1/2	9.5-12.7
Hot	1/4-3/8	6.3-9.5

Primary Chain Adjustment

CAUTION

Do not adjust the primary chain tighter than specified. Running chain too tight will result in excessive wear. (00202a)

1. See Primary Chain Adjuster: Sportster Models. Loosen locknut (1).
2. Turn chain adjuster screw (2) clockwise (inward) to reduce free play or counterclockwise (outward) to increase free play. Free play must fall within specifications. Refer to Primary Chain Free Play Specifications.

   NOTE:

   If free play cannot be set within specification, then primary chain and/or chain adjuster are worn beyond adjustment limits. See your Harley-Davidson dealer.
3. When free play is set correctly, hold chain adjuster screw and tighten locknut to 20-25 ft-lbs (27-34 Nm).
4. Install primary chain inspection cover with a **new** gasket. Tighten screws to 90-120 in-lbs (10.2-13.6 Nm).
5. Install main fuse.

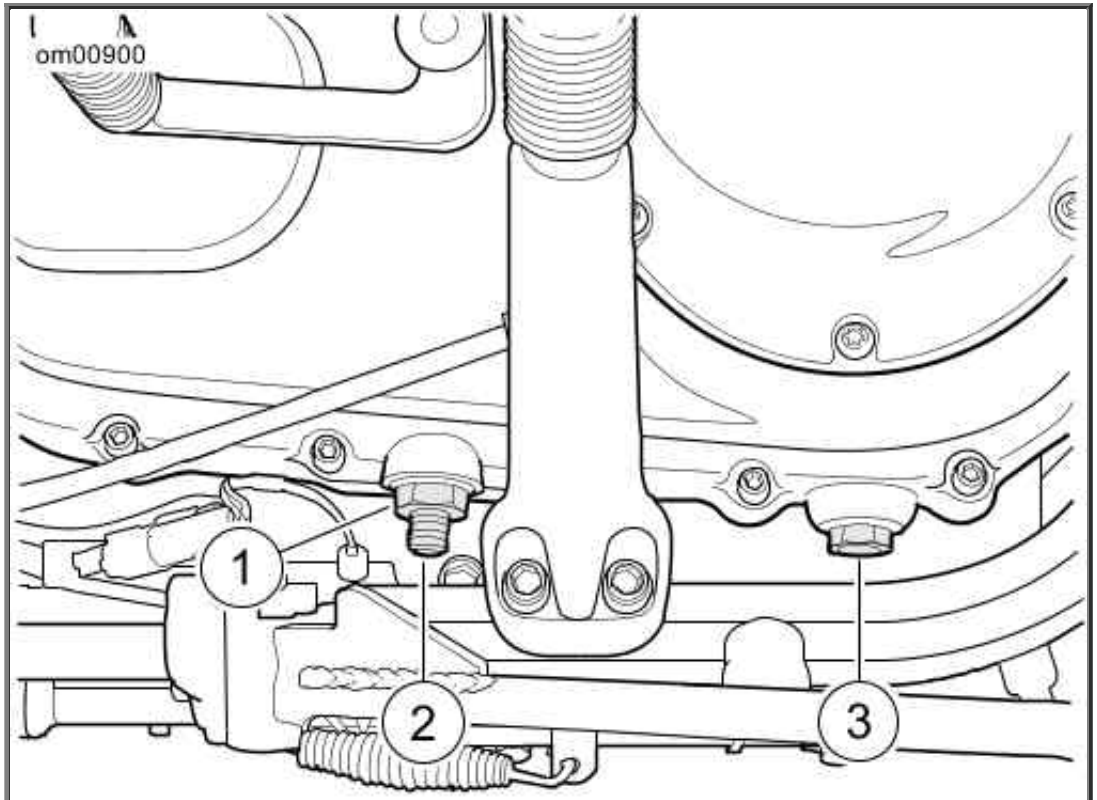

1. Locknut
2. Chain adjuster screw
3. Transmission chaincase drain plug

Primary Chain Adjuster: Sportster Models

Check Drive Belt Deflection

NOTE:

Always use BELT TENSION GAUGE HD-35381-A to measure belt deflection. Failure to use tension gauge may cause under-tensioned belts. Loose belts can fail due to "ratcheting" (jumping a tooth) which causes tensile cord crimping and breakage.

Check deflection:

- As part of pre-ride inspection.
- At every scheduled service interval.
- With transmission in neutral.
- With motorcycle at ambient temperature.
- With motorcycle upright or on jiffy stand with rear wheel on the ground.
- With the vehicle unladen: no rider, no luggage and saddlebags, if equipped, empty.

⚠WARNING

To prevent accidental vehicle start-up, which could cause death or serious injury, remove main fuse before proceeding. (00251b)

1. Disarm security system. Remove main fuse. See Fuses.
2. See Belt Tension Gauge. Measure belt deflection using H-D BELT TENSION GAUGE HD-35381-A :
    a. Slide O-ring (4) to 0 lb 0 kg mark (3).
    b. **Models equipped with belt deflection window:** Fit belt cradle (2) against bottom of drive belt in line with belt deflection window.
    c. **All other models:** Fit belt cradle (2) against bottom of drive belt halfway between drive pulleys.
    d. Press upward on knob (6) until O-ring slides down to 10 lb 4.5 kg mark (5) and hold steady.
3. Measure belt deflection:
    a. **Models equipped with belt deflection window:** See Checking Belt Deflection. Measure belt deflection as viewed through belt deflection viewing window while holding gauge steady. Each deflection graduation is approximately 1/16 in 1.59 mm .
    b. **All other models:** See Belt Deflection Window. Measure amount of deflection (4) while holding gauge steady.
4. Compare with specifications. Adjust as necessary. Refer to Belt Deflection Specifications*.
5. Install main fuse.

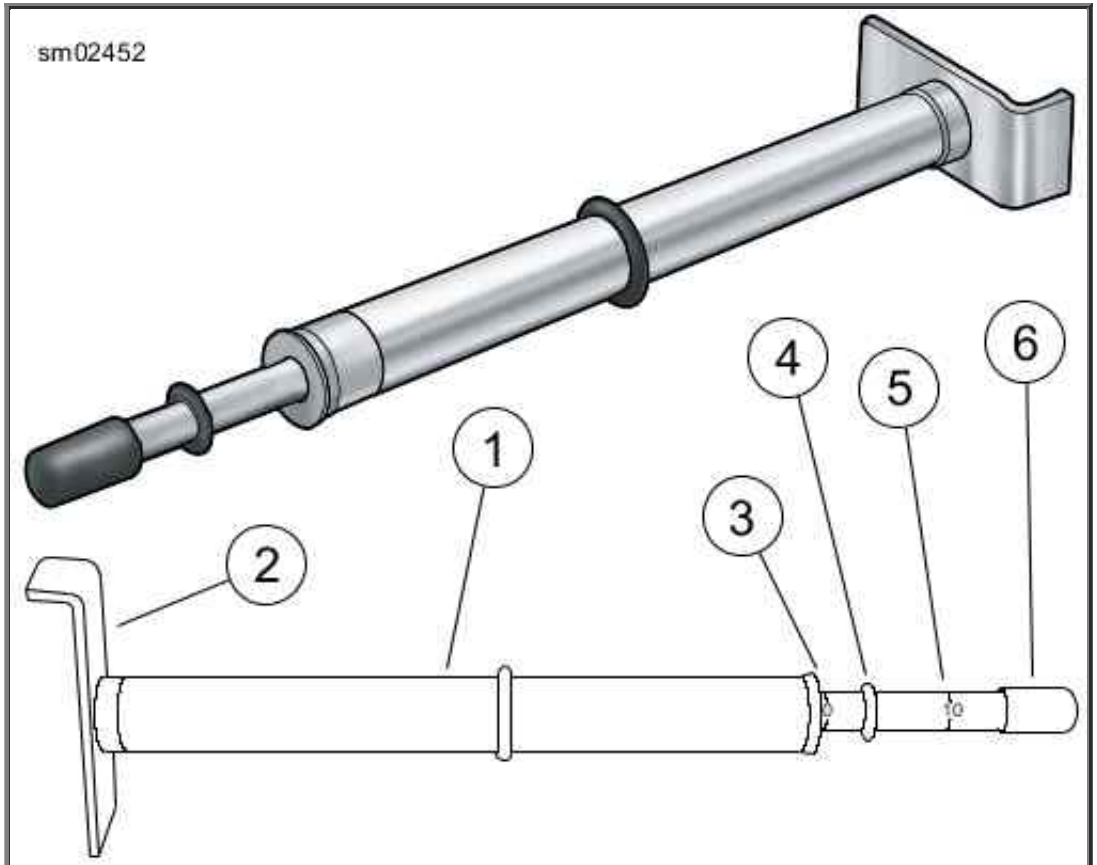

1. Belt tension gauge
2. Belt cradle
3. 0 lb (0 kg) mark
4. O-ring
5. 10 lb (4.5 kg) mark
6. Knob

Belt Tension Gauge

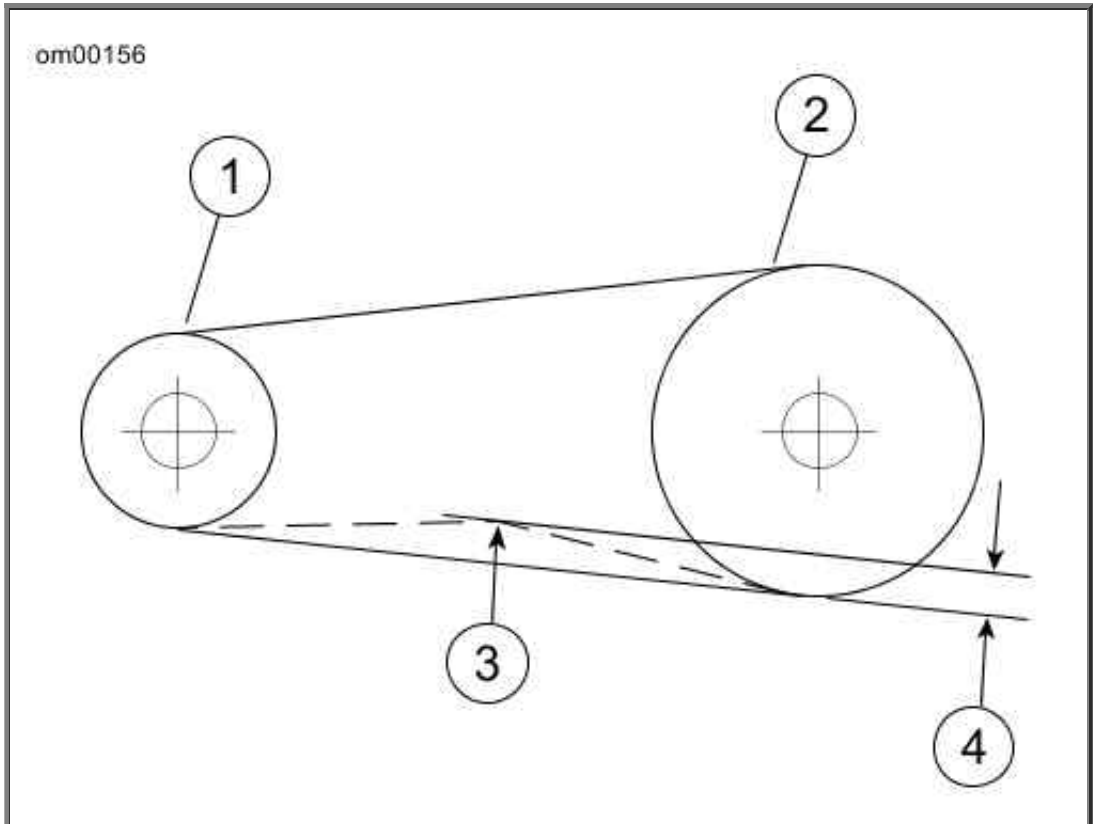

1. Transmission sprocket
2. Rear wheel sprocket
3. 10 lb (4.5 kg) of force
4. Amount of deflection

Checking Belt Deflection

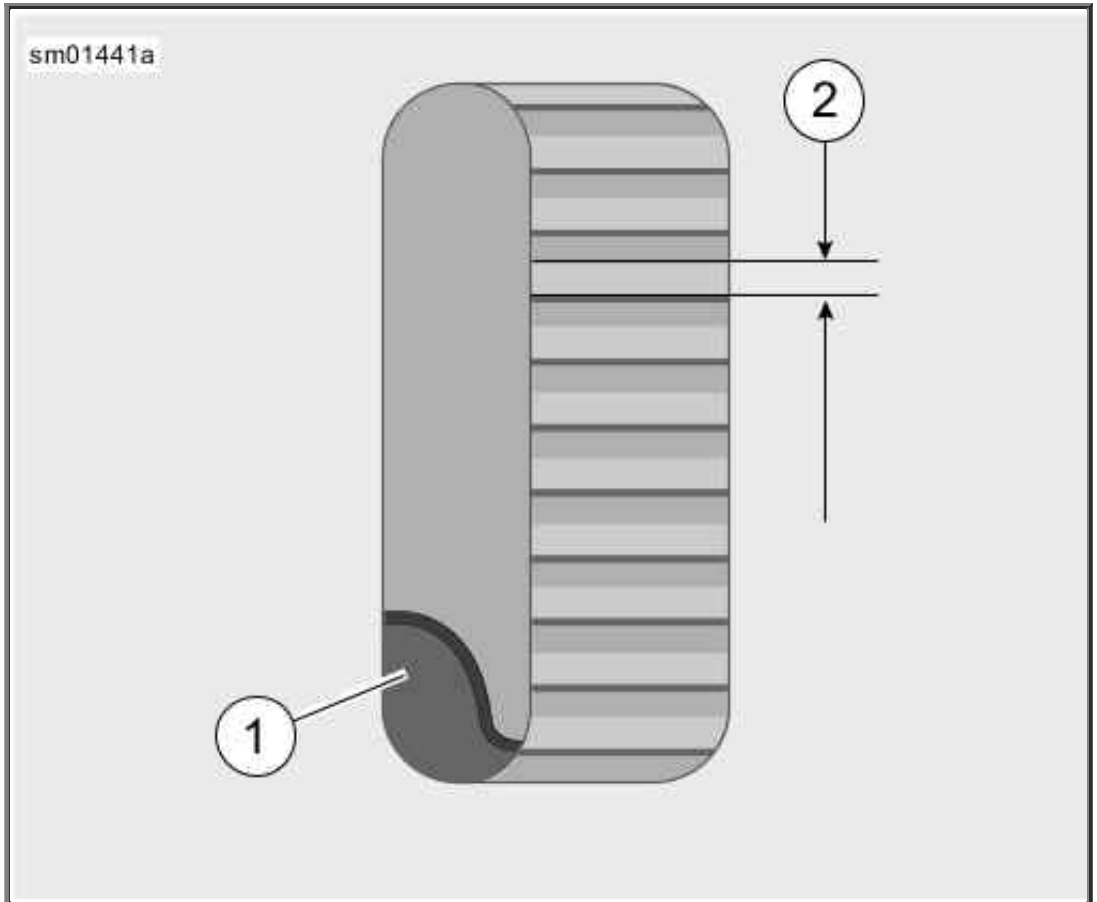

1. Drive belt
2. Deflection graduation

Belt Deflection Window

Belt Deflection Specifications*

MODELS	in	mm
All models	1/4-5/16	6.4-7.9
* Deflection measured at 10 lb 4.5 kg tension.		

Chassis Lubrication

Refer to Regular Service Intervals: 2016 Sportster Models for all maintenance schedules.

NOTE:

Use recommended SPECIAL PURPOSE GREASE for steering head bearings. Use a multipurpose chassis grease for other applications.

1. Remove and lubricate handlebar throttle control grip sleeve with fresh graphite.
2. Lubricate throttle control cables and clutch control cable with HARLEY LUBE.
3. Lubricate front brake hand lever and clutch control hand lever only if necessary.
4. Pack the steering head bearings with SPECIAL PURPOSE GREASE at recommended service intervals.
5. Lubricate the jiffy stand mechanism with SILVER GRADE ANTI-SEIZE.

NOTE:

For model specific information regarding the chassis lubrication, refer to the service manual or see a Harley-Davidson dealer.

Oil Applications

Lubricate motorcycle at regular intervals, particularly after washing motorcycle or driving in wet weather. Refer to Regular Service Intervals: 2016 Sportster Models.

Front Fork Oil

Have a Harley-Davidson dealer service the front fork at the specified intervals. If fork does not appear to be working properly or an appreciable amount of oil leakage develops, see a Harley-Davidson dealer. If there is insufficient oil in either side of fork, the rebound action will be incorrect. Refer to Regular Service Intervals: 2016 Sportster Models.

Mechanical Clutch

CAUTION

The clutch control cable must be oiled and adjusted periodically to compensate for lining wear. See MAINTENANCE SCHEDULING in this manual. Failure to oil and adjust the clutch control cable can result in equipment damage. (00203b)

Adjust the clutch control cable at specified intervals. Refer to Regular Service Intervals: 2016 Sportster Models.

If the clutch slips under load or drags when released, the control cable may need to be adjusted or clutch service may need to be performed. See a Harley-Davidson dealer for service.

Hydraulic Lifters

The hydraulic lifters are self-adjusting. They automatically adjust length to compensate for engine expansion and valve mechanism wear. This keeps the valve mechanism free of lash when the engine is running.

When starting an engine which has been turned off even for a few minutes, the valve mechanism may be slightly noisy until the hydraulic units completely refill with oil. If at any time the valve mechanism becomes abnormally noisy, other than for a short period immediately after engine is started, it is an

indication that one or more of the hydraulic units may not be functioning properly.

Always check the engine oil level first since normal circulation of oil through the engine is necessary for proper operation of the hydraulic lifters.

If engine oil is at the proper level, the lifters may not be functioning properly because of dirt in the oil supply passages leading to the lifter units. See a Harley-Davidson dealer for service.

Steering Head Bearings

⚠WARNING

Adjustments to steering head bearings should be performed by a Harley-Davidson dealer. Improperly adjusted bearings can adversely affect handling and stability, which could result in death or serious injury. (00051b)

Check for proper steering head bearing adjustment and lubricate bearings using SPECIAL PURPOSE GREASE at proper intervals. Refer to Regular Service Intervals: 2016 Sportster Models.

With motorcycle front end raised off the floor, be sure front fork turns freely without any binding or interference and that there is no appreciable front to rear fork movement indicating excessive bearing looseness. Steering head bearings should be adjusted according to service manual procedure, if necessary.

Brakes

Brake Fluid

⚠WARNING

Clean reservoir filler cap or cover before removing. Use only DOT 4 brake fluid from a sealed container. Contaminated fluid can adversely affect braking or clutch disengagement, which could result in death or serious injury. (00504d)

⚠CAUTION

Direct contact of D.O.T. 4 brake fluid with eyes can cause irritation. Avoid eye contact. In case of eye contact flush with large amounts of water and get medical attention. Swallowing large amounts of D.O.T. 4 brake fluid can cause digestive discomfort. If swallowed, obtain medical attention. Use in well ventilated area. KEEP OUT OF REACH OF CHILDREN. (00240a)

CAUTION

D.O.T. 4 brake fluid will damage painted and body panel surfaces it comes in contact with.

D.O.T. 4 brake fluid will damage painted and body panel surfaces it comes in contact with. Always use caution and protect surfaces from spills whenever brake work is performed. Failure to comply can result in cosmetic damage. (00239b)

CAUTION

Do not allow dirt or debris to enter the master cylinder reservoir. Dirt or debris in the reservoir can cause improper operation and equipment damage. (00205c)

CAUTION

D.O.T. 4 brake fluid will damage painted and body panel surfaces it comes in contact with. Always use caution and protect surfaces from spills whenever brake work is performed. Failure to comply can result in cosmetic damage. (00239b)

NOTES:

- *If the brake system is not leaking, there should never be a need to add fluid. If the fluid level is low, the pads are probably worn and need to be replaced. By replacing the pads, the fluid level rises.*
- *Replace the brake fluid every two years. Use only DOT 4 BRAKE FLUID. See a Harley-Davidson dealer.*

Front brakes: Position motorcycle and handlebar so the master cylinder reservoir is level.

See Brake Fluid Low Level Marks. View sight glass (1) to verify that fluid level is at or above the center of sight glass.

Rear brakes: Position motorcycle so the master cylinder reservoir is level. Verify that fluid level is visible within the window (2).

If the fluid level is below the minimum mark or not present in either the front or rear brake reservoir, see a Harley-Davidson dealer.

Verify front brake hand lever and rear brake foot pedal have a firm feel when applied. If brakes are not firm, the brake system must be bled. See a Harley-Davidson dealer.

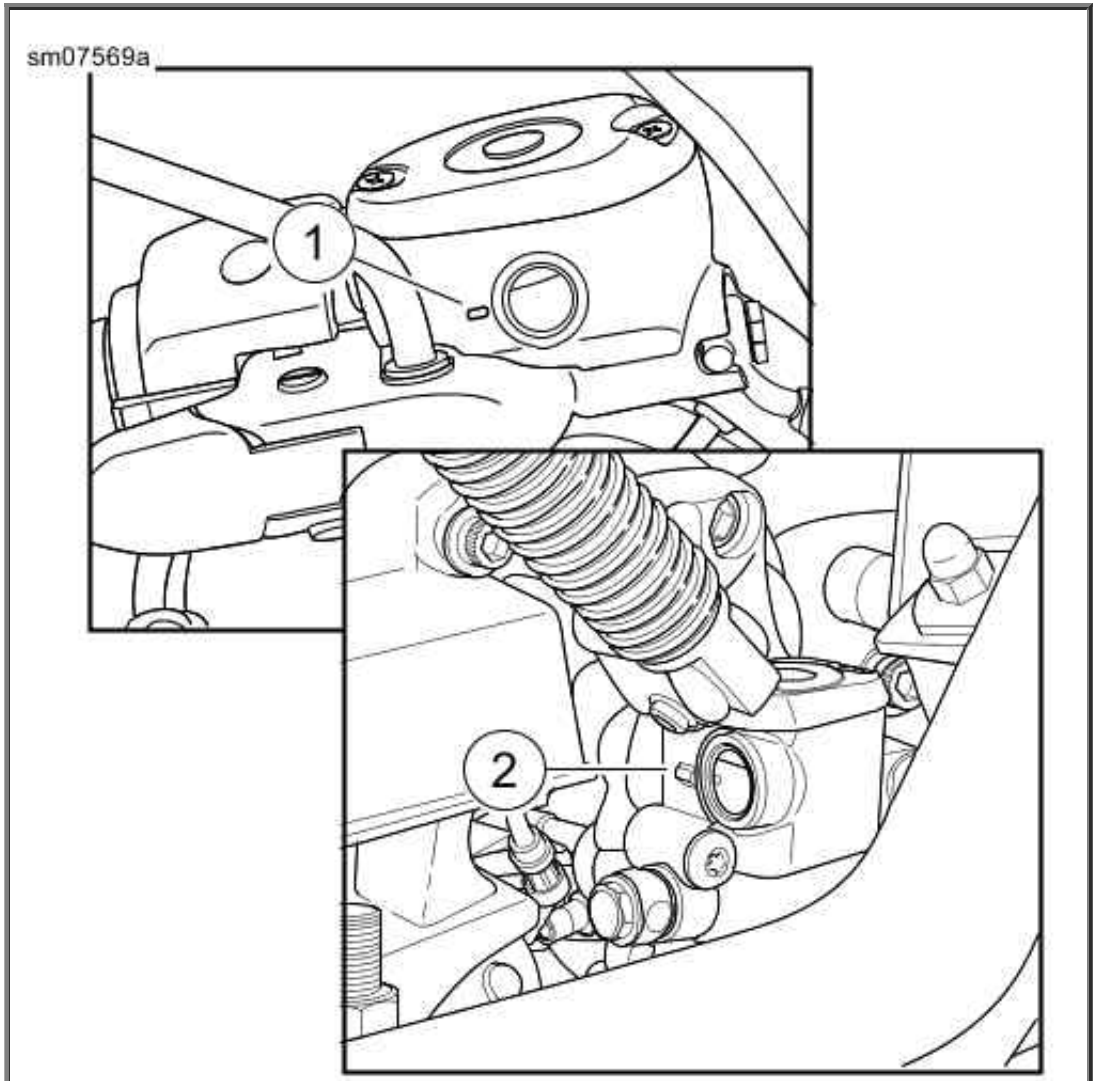

1. Front
2. Rear

Brake Fluid Low Level Marks

Brake Pads

⚠WARNING

Inspect brake pads for wear at service maintenance intervals. If you ride under adverse conditions (steep hills, heavy traffic, etc.), inspect more frequently. Excessively worn brake pads can lead to brake failure, which could result in death or serious injury. (00052a)

⚠WARNING

Always replace brake pads in complete sets for correct and safe brake operation. Improper brake operation could result in death or serious injury. (00111a)

⚠WARNING

Brakes are a critical safety component. Contact a Harley-Davidson dealer for brake repair or replacement. Improperly serviced brakes can adversely affect brake performance, which could result in death or serious injury. (00054a)

⚠WARNING

Perform routine scheduled brake maintenance. Lack of maintenance at recommended intervals can adversely affect brake performance, which could result in death or serious injury. (00055a)

Harley-Davidson has equipped your new motorcycle with the optimum brake pad friction material available. It is selected to give the best performance possible under dry or wet conditions and at high operating temperatures. It exceeds all regulatory requirements currently in effect. However, during some braking you can experience noise. This noise is normal for this friction material.

⚠WARNING

Be sure wheel and brake caliper are aligned. Riding with a misaligned wheel or brake caliper can cause the brake disc to bind and lead to loss of control, which could result in death or serious injury. (00050a)

1. Check the rear brake disc as it spins. The disc should run true in the brake caliper.
2. See Brake Pad Thickness. Measure the thickness of the brake pad friction material. For rear brakes, place the ruler against the brake disc through the space alongside the caliper.

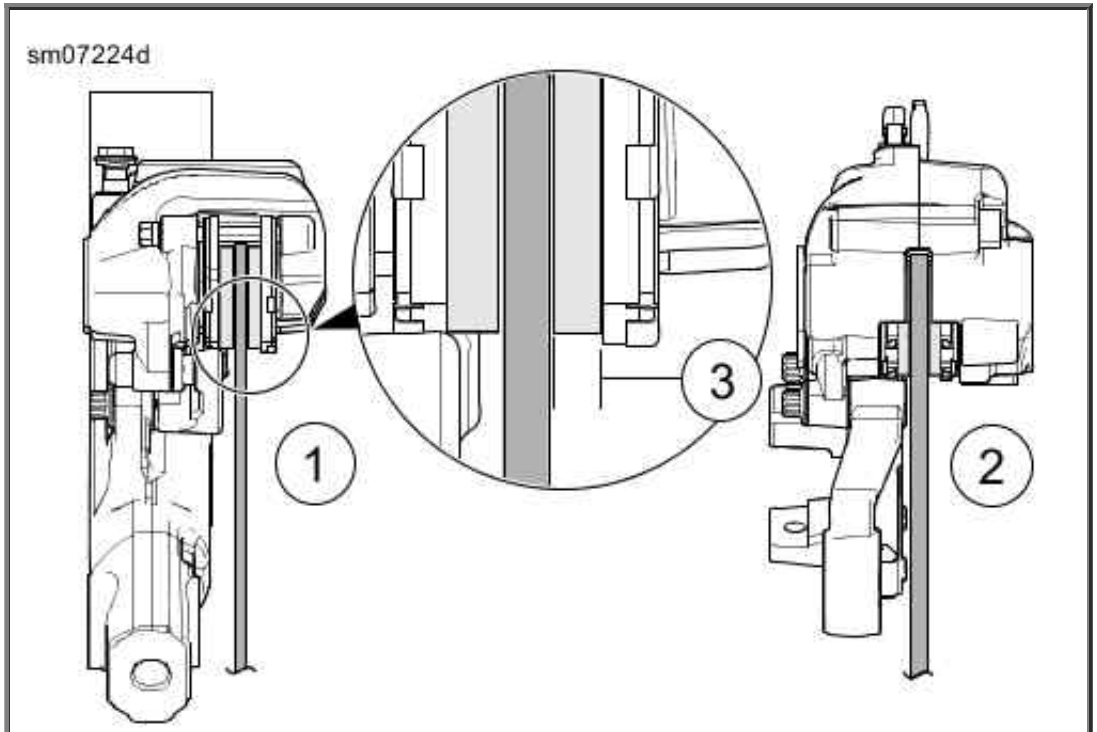

1. Front, from below
2. Rear, from above
3. Pad thickness

Brake Pad Thickness

NOTE:

Always replace brake pads in pairs.

3. Replace brake pads before friction material reaches minimum thickness. See a Harley-Davidson dealer. Refer to Minimum Brake Pad Friction Material Thickness.

Minimum Brake Pad Friction Material Thickness

in	mm
0.040	1.020

Tires

Refer to Specified Tires for tires and pressures.

- Keep tires properly inflated.
- Follow tire data for correct cold tire inflation pressure.
- Check tire pressures when tires are cold.

⚠WARNING

Be sure tires are properly inflated, balanced, undamaged, and have adequate tread. Inspect your tires regularly and see a Harley-Davidson dealer for replacements. Riding with excessively worn, unbalanced, improperly inflated, overloaded or damaged tires can lead to tire failure and adversely affect stability and handling, which could result in death or serious injury. (00014b)

⚠WARNING

Match tires, tubes, rim strips or seals, air valves and caps to the correct wheel. Contact a Harley-Davidson dealer. Mismatching can lead to tire damage, allow tire slippage on the wheel or cause tire failure, which could result in death or serious injury. (00023c)

⚠WARNING

Only install original equipment tire valves and valve caps. A valve, or valve and cap combination, that is too long or too heavy can strike adjacent components and damage the valve, causing rapid tire deflation. Rapid tire deflation can cause loss of vehicle control, which could result in death or serious injury. (00281a)

Check tires for correct pressure, excessive wear or any signs of tire damage at least weekly if in daily use. Check before each ride if only ridden occasionally.

Use only Harley-Davidson specified tires. Other tires may not fit correctly and could adversely affect stability, handling and performance. Refer to Specified Tires.

⚠WARNING

Tires are a critical safety component. Contact a Harley-Davidson dealer for tire repair or replacement. Improper tire service can adversely affect stability and handling, which could result in death or serious injury. (00057a)

⚠WARNING

Replace punctured or damaged tires. In some cases, small punctures in the tread area may be repaired from within the removed tire by a Harley-Davidson dealer. Speed should NOT exceed 50 mph (80 km/h) for the first 24 hours after repair, and the repaired tire should NEVER be

used over 80 mph (130 km/h). Failure to follow this warning could lead to tire failure and result in death or serious injury. (00015b)

⚠WARNING

Striking an object, such as a curb or pothole can cause internal tire damage. If an object is struck, have the tire inspected immediately inside and out by a Harley-Davidson dealer. A damaged tire can fail while riding and adversely affect stability and handling, which could result in death or serious injury. (00058b)

Tire Replacement

Tread Wear

⚠WARNING

Replace tire immediately with a Harley-Davidson specified tire when wear bars become visible or only 1/32 in (0.8 mm) tread depth remains. Riding with a worn tire could result in death or serious injury. (00090c)

Harley-Davidson tires are equipped with wear bars that run horizontally across the tread. When a tire is worn to the point that the wear bars are visible, or 1/32 in 0.8 mm tread depth remains, the tire can:

- Be more easily damaged leading to tire failure.
- Provide reduced traction.
- Adversely affect stability and handling.

Replace the tires with **new** tires before the tread wear bars appear:

- See Tread Pattern: Michelin Tires or Tread Pattern: Dunlop Tires. Indicators (1) on the tire sidewalls point to tread wear bars (2) in the tread.
- Tread wear bars appear in the tread pattern when 1/32 in 0.8 mm or less of tread remains.

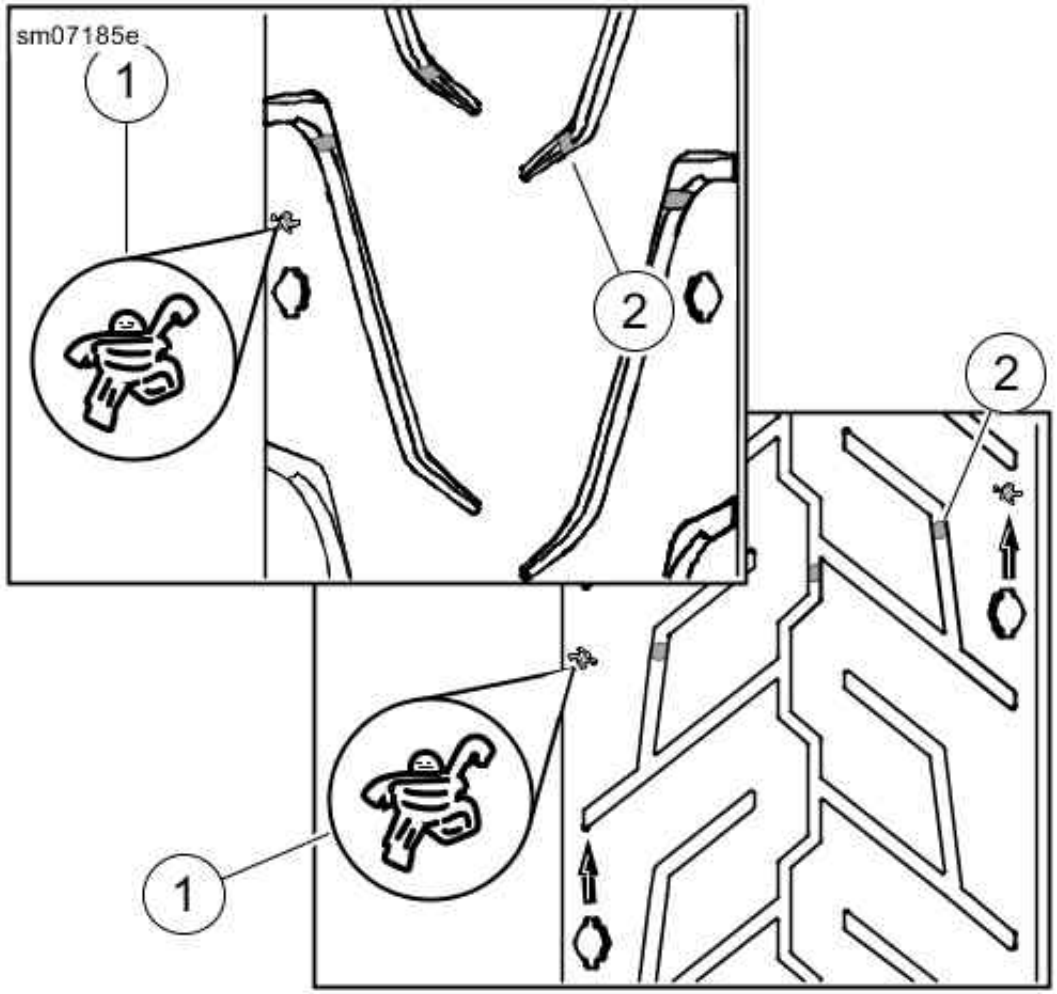

1. Indicator
2. Tread wear bar

Tread Pattern: Michelin Tires

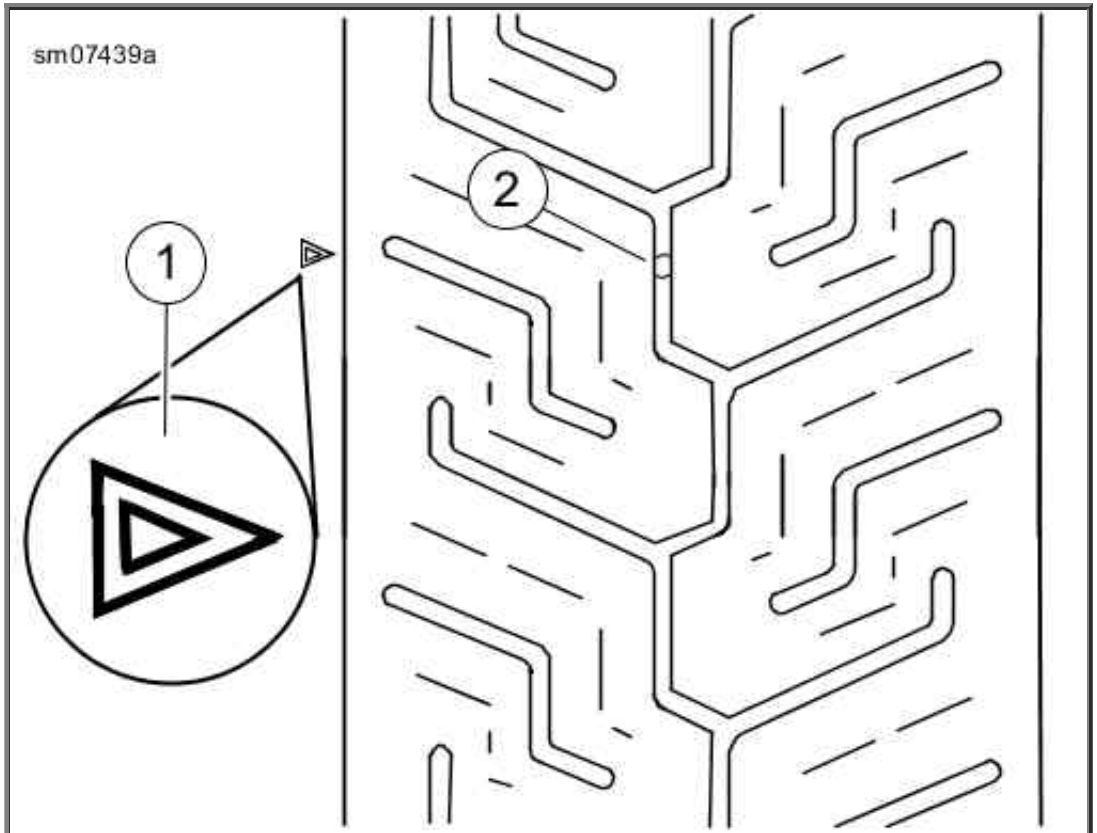

1. Indicator
2. Tread wear bar

Tread Pattern: Dunlop Tires

Tire Damage

Replace tires with **new** tires when:

- Tire cords or fabric are visible through cracked sidewalls, snags or deep cuts.
- A bump, bulge or split is found anywhere on the tire.
- A puncture, cut or other damage cannot be repaired.

Shock Absorbers

Inspect shock absorbers and rubber bushings for leaks and bushing deterioration at proper intervals.

Spark Plugs

WARNING

Disconnecting spark plug cable with engine running can result in electric shock and death or serious injury. (00464b)

CAUTION

Do NOT pull on any electrical wires. Pulling on electrical wires may damage the internal conductor causing high resistance, which may result in minor or moderate injury. (00168a)

Check the spark plugs at proper intervals. Refer to Regular Service Intervals: 2016 Sportster Models.

1. Disconnect spark plug cables from plugs by pulling up on the molded connector caps.
2. Check spark plug type. Only use those spark plugs specified for your model motorcycle.
3. Check spark plug gap against specifications. Refer to Electrical.

   NOTE:

   *If a torque wrench is not available, tighten **new** spark plugs finger-tight and then tighten an additional one-quarter turn with a spark plug wrench.*
4. Always tighten to the proper torque. Spark plugs must be tightened to the torque specified for proper heat transfer. Refer to Electrical.
5. Connect each molded connector cap until the cap snaps firmly into place over the spark plug.

Air Cleaner

Removal

CAUTION

Install air filter before running engine. Failure to do so can draw debris into the engine and could result in engine damage. (00207a)

NOTES:

At regular intervals, inspect the air filter element. Under dusty conditions, inspect more often. Refer to Regular Service Intervals: 2016 Sportster Models.

1. See Air Cleaner. Depending on your model Sportster, remove the cover screws (2), trim (7) and the air cleaner cover (6).
2. Inspect the filter element (3).

3. Remove and clean the air filter element if necessary.

Cleaning Filter Element

⚠WARNING

Do not use gasoline or solvents to clean filter element. Flammable cleaning agents can cause an intake system fire, which could result in death or serious injury. (00101a)

NOTES:

- *Do not tap the filter on a hard surface to dislodge dirt.*
- *Replace the filter element if damaged or if the element cannot be cleaned.*

1. Wash the filter in warm soapy water.

   NOTE:

   The filter is clean if light is visible through it.

2. Hold the filter up to a light.

   NOTE:

   Do NOT use air cleaner filter oil on the paper/wire mesh element.

⚠WARNING

Compressed air can pierce the skin and flying debris from compressed air could cause serious eye injury. Wear safety glasses when working with compressed air. Never use your hand to check for air leaks or to determine air flow rates. (00061a)

3. Air dry or blow dry the filter from the inside with low-pressure air.

Installation

NOTE:

See Air Cleaner. Check that the O-rings (1) on the breather tubes are in place.

1. If removed, install the air filter element:

   a. Install the baseplate gasket (2).

   b. Install the air filter element (3).

   c. Apply a drop of LOCTITE THREADLOCKER 243 (blue) to the threads of the element screws (4).

d. Install the element screws.

e. Tighten to specification. Refer to Air Cleaner Fastener Torque.

2. Install air cleaner cover.

a. Verify the air cleaner seal (5) is in place.

b. Install the cover (6).

c. Depending on your model Sportster, install the trim (7) and the screws (8).

d. Tighten to specification. Refer to Air Cleaner Fastener Torque.

Air Cleaner Fastener Torque

FASTENER	TORQUE	
	in-lbs	Nm
Air filter element screws	40-60	4.5-6.8
Air filter cover screws	36-60	4.1-6.8

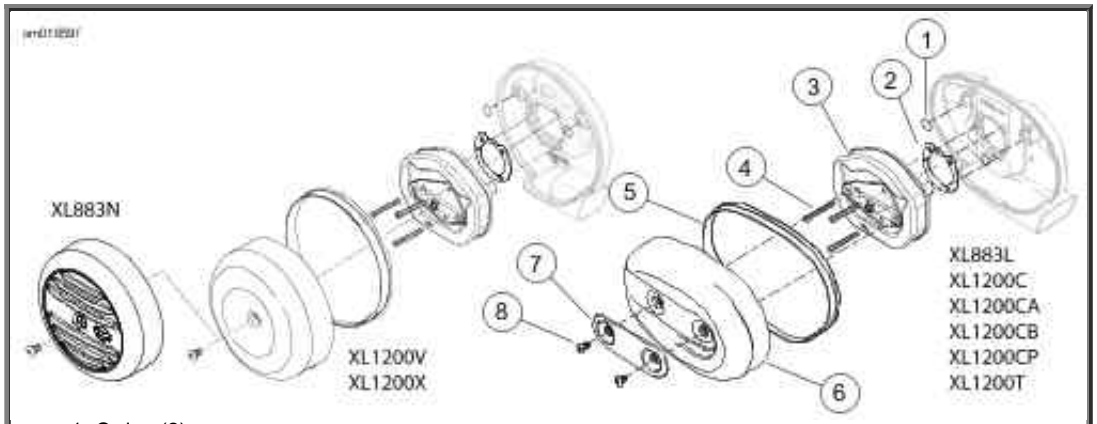

1. O-ring (2)
2. Gasket
3. Filter element
4. Element screw (3)
5. Seal
6. Cover
7. Trim
8. Cover screw

Air Cleaner

Headlamp Bulb

Removal

WARNING

To prevent accidental vehicle start-up, which could cause death or serious injury, remove main fuse before proceeding. (00251b)

CAUTION

When replacement is required, use only the specified sealed beam unit or bulb, available from a Harley-Davidson dealer. An improper wattage sealed beam or bulb, can cause charging system problems. (00209a)

1. Remove main fuse. See Fuses.
2. Loosen the trim ring screw. Remove the trim ring.
3. Support the lens and reflector.
4. See Headlamp. While compressing the release tabs (1) on the connector, pull the connector off the bulb spade terminals.
5. Pull the rubber boot (2) back.
6. To remove the bulb from the lens and reflector, press the loop (3) on the wire retaining clip (4) down and to one side to disengage the free end of the clip from the metal catch. Rotate the clip up.

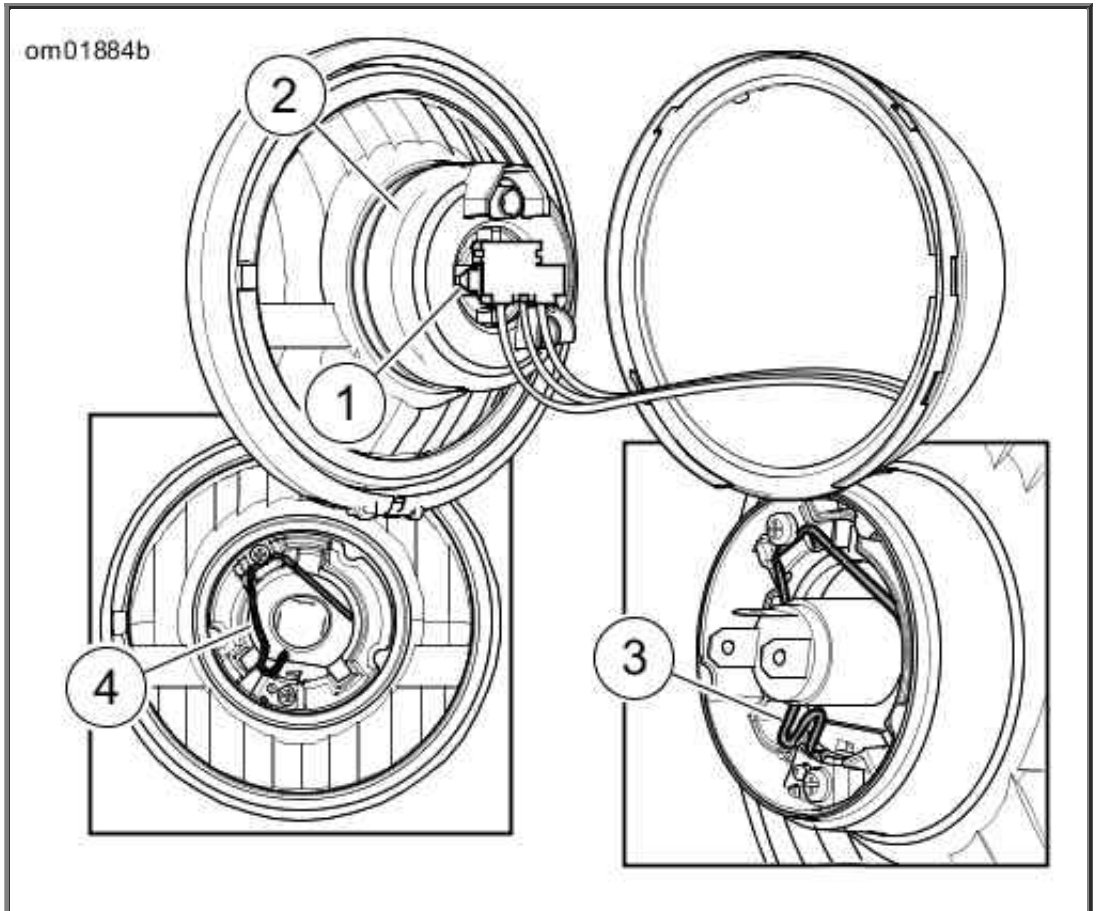

1. Release tab
2. Rubber boot
3. Loop
4. Retaining clip

Headlamp

Installation

WARNING

Handle bulb carefully and wear eye protection. Bulb contains gas under pressure, which, if not handled carefully, could cause serious eye injury. (00062b)

CAUTION

Never touch the quartz bulb. Fingerprints will etch the glass and decrease bulb life. Handle the bulb with paper or a clean, dry cloth. Failure to do so could result in bulb damage. (00210b)

1. Align bulb tabs with slots in the reflector. Install the bulb.
2. Rotate the retaining clip down against the bulb flange. Press the wire loop down and in until the free end of the clip engages the metal catch.
3. See Headlamp Assembly. Match the rubber boot TOP arrow to the reflector arrow (1). Fit the rubber boot over the spade terminals of the bulb. Press the air out of the boot to seal over the lens and the reflector assembly.
4. Install the connector.
5. Verify that the adapter ring is in place with the two tabs (2) of the ring in the two bulges in the headlamp shell.
6. Match the single tab on the reflector to the notch (3) on the inside of the adapter ring.
7. Fit the trim ring and rotate the ring clockwise to lock the ring on the lens and reflector.

   NOTES:
   - ***XL883L. XL1200N, XL1200R, XL1200T, XL1200X:*** *The trim ring is secured with a screw (4) and nut.*
   - ***XL1200C, XL1200CP, XL1200CA, XL1200CB, XL1200V:*** *A rubber finger gasket (5) cushions the reflector and a single screw secures the trim ring.*
8. Tighten the screw to 9-14 in-lbs (1.0-1.5 Nm).
9. Install main fuse. See Fuses.

⚠WARNING

Be sure that all lights and switches operate properly before operating motorcycle. Low visibility of rider can result in death or serious injury. (00316a)

10. Test headlamp operation.
11. Align headlamp. See Headlamp Alignment.

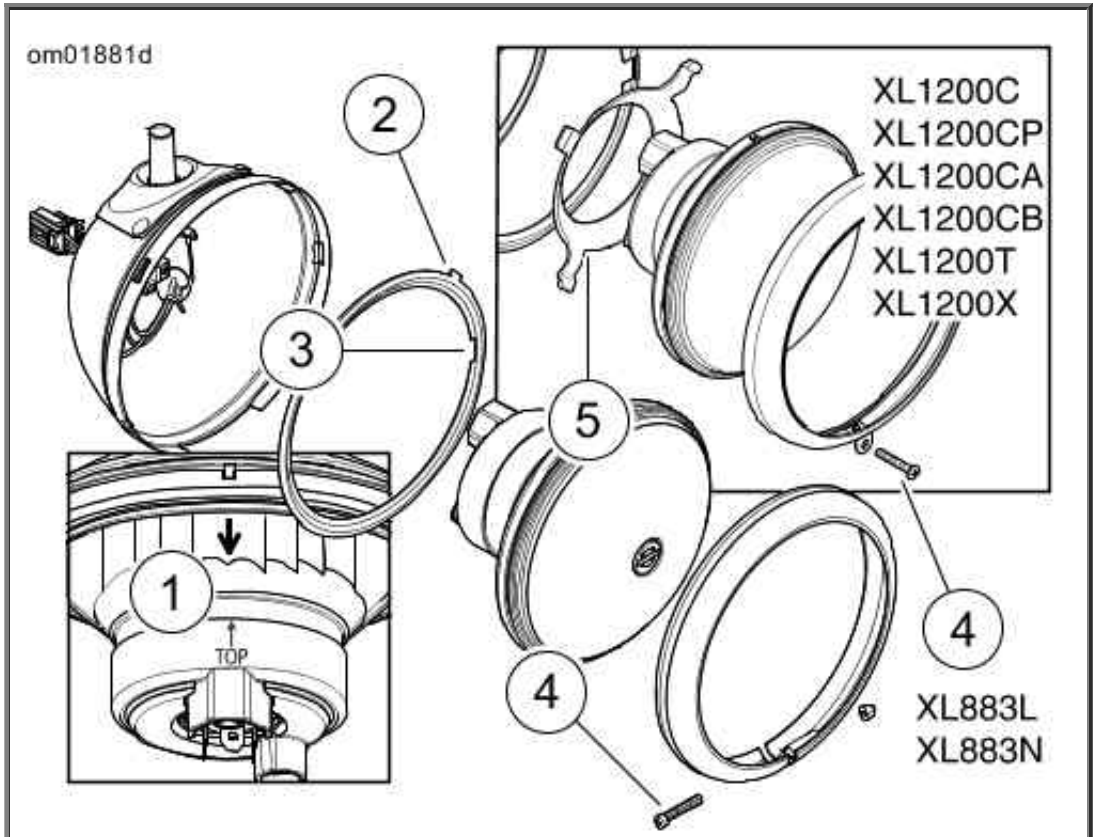

1. Arrows
2. Tabs
3. Notch
4. Screw
5. Finger gasket: XL1200C, XL1200CA, XL1200CB, XL1200CP, XL1200V

Headlamp Assembly

Position Lamp: HDI

1. Remove the main fuse. See Fuses.
2. Remove the trim ring. Support the lens and reflector.
3. See Position Lamp. Remove the spade connectors from the bulb.
4. Pull the bulb holder from the lens and reflector.
5. Turn the bulb one-quarter turn to remove. Install with a one-quarter turn.
6. Install the bulb and holder.
7. Match the reflector tab to the adapter ring notch.

8. Install the trim ring. Tighten to 9-14 in-lbs (1.0-1.5 Nm).

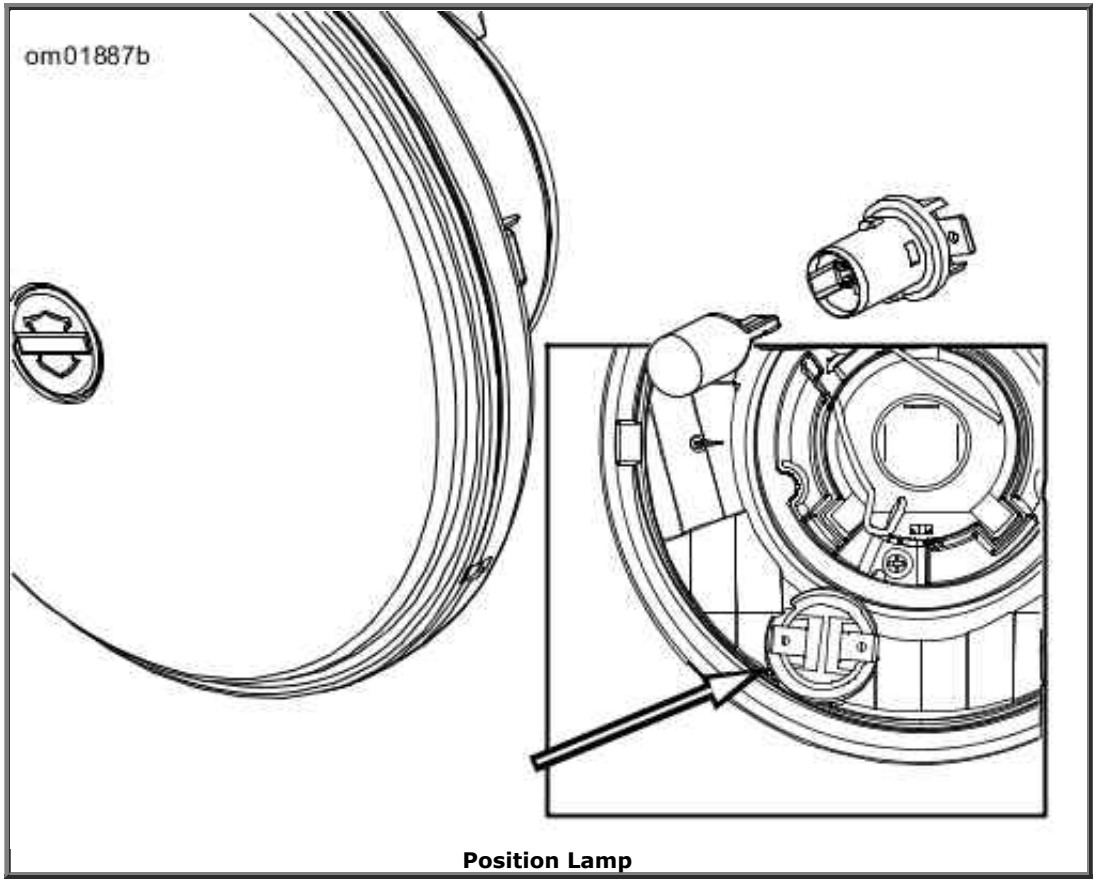

Position Lamp

Headlamp Alignment

1. Check tire pressure.
2. Fill fuel tank or add an equal amount of ballast.
3. Adjust rear shocks for the rider and intended load.

   NOTE:

   Choose a wall in minimum light.
4. See Headlamp Alignment: Sportster Models. Park the motorcycle on a perpendicular line (1) with the front axle 25 ft 7.6 m (3) from a wall.
5. Draw a vertical line (2) on the wall.

   NOTE:

   Adjust the headlamps of motorcycles with multiple beam headlamps to converge into one pattern.

6. With the motorcycle loaded, point the front wheel straight forward at wall. Measure the distance (4) from the floor to the center of the high beam bulb.
7. Draw a horizontal line (5) through the vertical line on the wall. Place line 2.1 in 53.3 mm lower than the measured bulb centerline.

   NOTE:

   The headlamp is aligned when the light beam hot spot is located over the intersection of the lines.

8. With the high beam activated, verify headlamp alignment. Adjust as necessary.

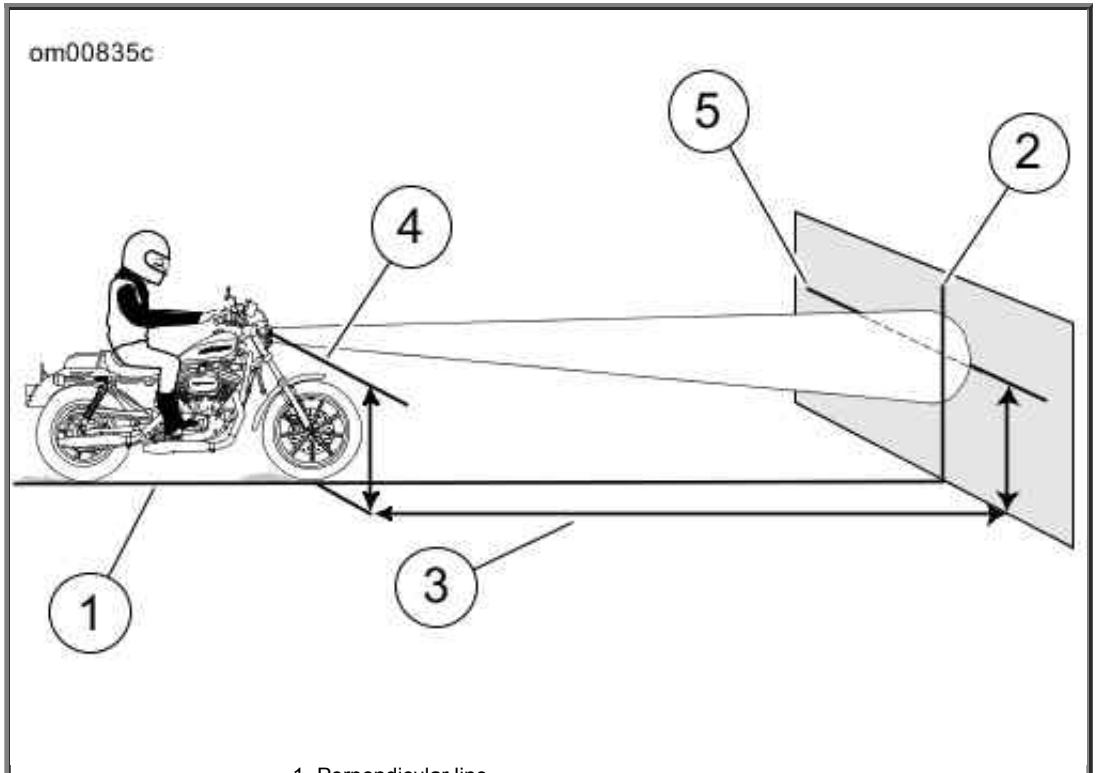

1. Perpendicular line
2. Vertical line
3. 25 ft (7.6 m)
4. High beam bulb centerline
5. Horizontal line 2.1 in (53.3 mm) lower than bulb centerline

Headlamp Alignment: Sportster Models

Headlamp Adjustment

Adjustment: XL1200C, XL1200CA, XL1200CB, XL1200CP, XL1200V, XL1200X

1. Set horizontal adjustment:
    a. See Headlamp Adjustment: XL1200C, XL1200CA, XL1200CB, XL1200CP, XL1200V, XL1200X. Loosen horizontal adjustment screw (3).
    b. Turn headlamp right or left as necessary to direct light beam straight ahead.
    c. Tighten horizontal adjustment screw to 30-35 ft-lbs (40.7-47.5 Nm).
2. Set vertical adjustment:
    a. Loosen locknut (1) for vertical adjustment bolt.
    b. Tilt headlamp up or down to aim it at horizontal line on wall.
    c. Tighten headlamp locknut to 30-35 ft-lbs (40.7-47.5 Nm).

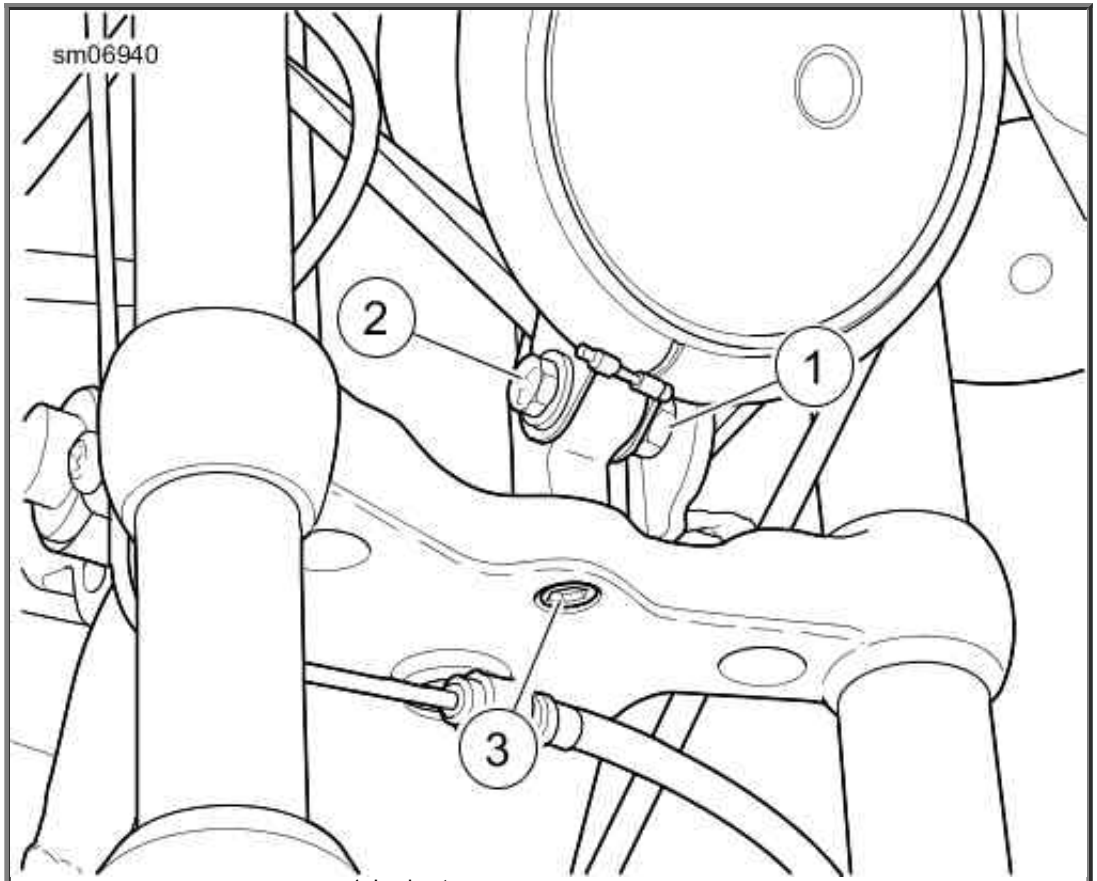

1. Locknut
2. Vertical adjustment bolt
3. Horizontal adjustment screw

Headlamp Adjustment: XL1200C, XL1200CA, XL1200CB, XL1200CP, XL1200V, XL1200X

Adjustment: XL883L, XL883N, XL1200T

1. See Headlamp Adjustment: XL883L, XL883N, XL1200T. Remove snap plug (1) on top of headlamp bracket (2).
2. Loosen headlamp clamp nut (3).
3. Tilt headlamp up or down to aim it at horizontal line. At same time, turn it right or left to aim beam straight ahead.
4. Tighten headlamp clamp nut to 120-240 in-lbs (13.6-27.1 Nm) after lamp is properly positioned.
5. Install snap plug.

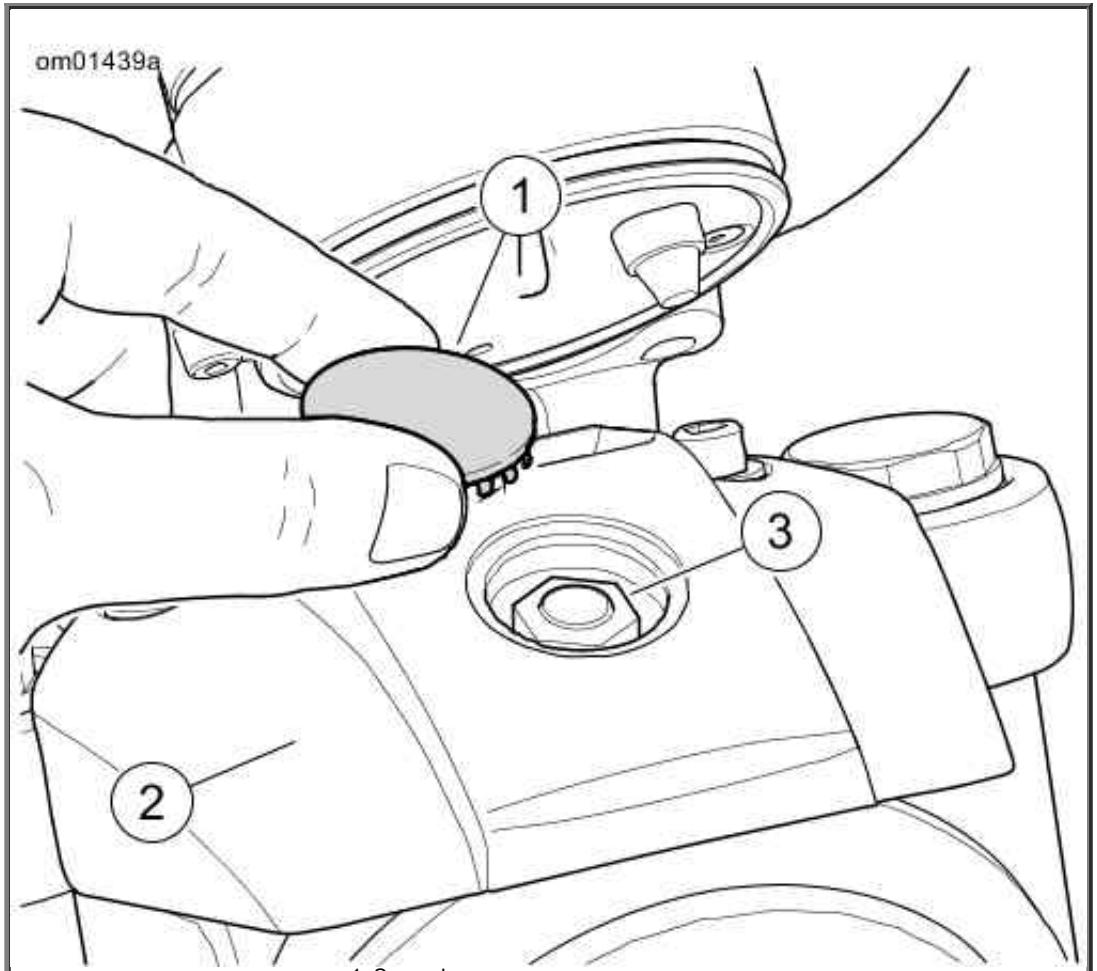

1. Snap plug
2. Headlamp bracket
3. Clamp nut

Headlamp Adjustment: XL883L, XL883N, XL1200T

Turn Signal Bulb Replacement: Bullet Style

NOTE:

Models with LED lamps do not contain replacement bulbs. Replace the LED assembly.

1. See Remove Lens. Insert a coin or the blade of a small screwdriver into the notch at the bottom of the lens cap. Carefully twist until the lens cap pops out of the lamp housing.
2. Push bulb in and rotate counterclockwise. Pull bulb from socket.

3. Inspect condition of electrical contacts in socket. If necessary, clean with a small wire brush and electrical contact cleaner.
4. Apply ELECTRICAL CONTACT LUBRICANT to contacts in socket and at bottom of **new** bulb.
5. Align pins on **new** bulb with pin guides in bulb socket. Push bulb in and turn clockwise to lock in place.
6. Snap lens cap onto the lamp housing with notch at bottom.

⚠WARNING

Be sure that all lights and switches operate properly before operating motorcycle. Low visibility of rider can result in death or serious injury. (00316a)

7. Check operation of all lamps.

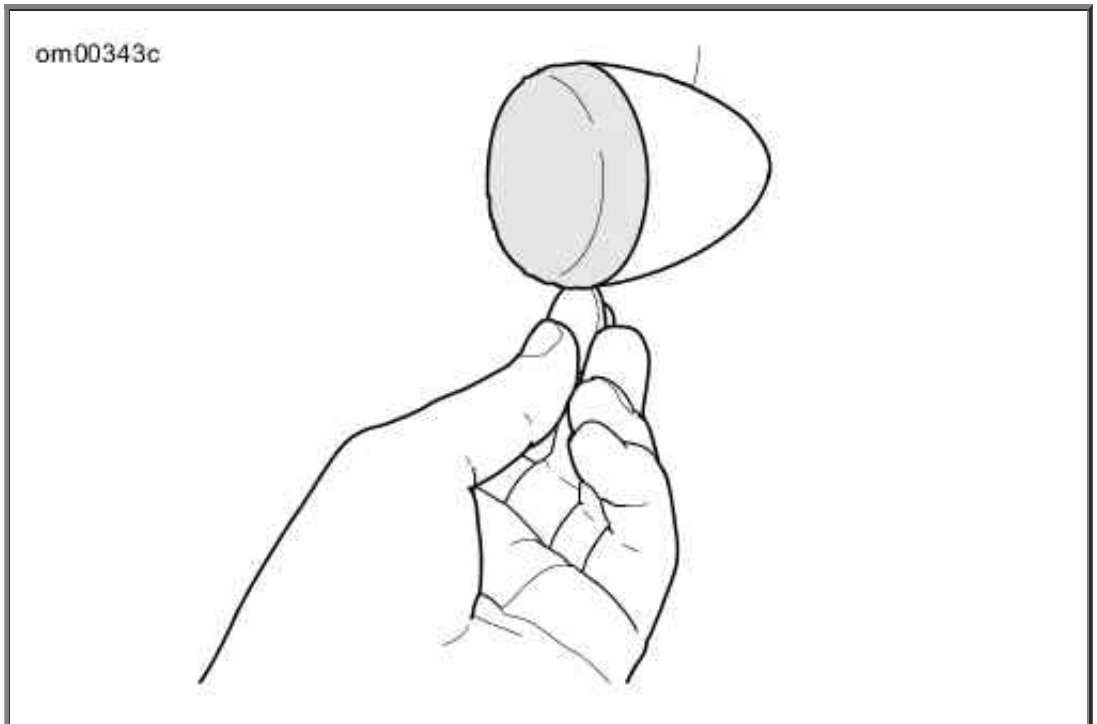

Remove Lens

Tail Lamp Bulb Replacement

XL883L XL1200L, XL1200T and Models with Standard Style Tail Lamp

1. See Tail Lamp Assembly. Remove two screws and lens from base.

   NOTE:

   Remove the 4-pin connector to ease bulb removal.

2. Pull bulb assembly from lens. Remove bulb.
3. Coat base of **new** bulb with ELECTRICAL CONTACT GREASE. Install **new** bulb.
4. Install (push) bulb assembly to lens.
5. If removed, connect connector to circuit board.
6. Install lens to base with two screws. Tighten to 20-24 in-lbs (2.3-2.7 Nm).

⚠WARNING

Be sure that all lights and switches operate properly before operating motorcycle. Low visibility of rider can result in death or serious injury. (00316a)

7. Turn ignition on. Check operation of all lamps.

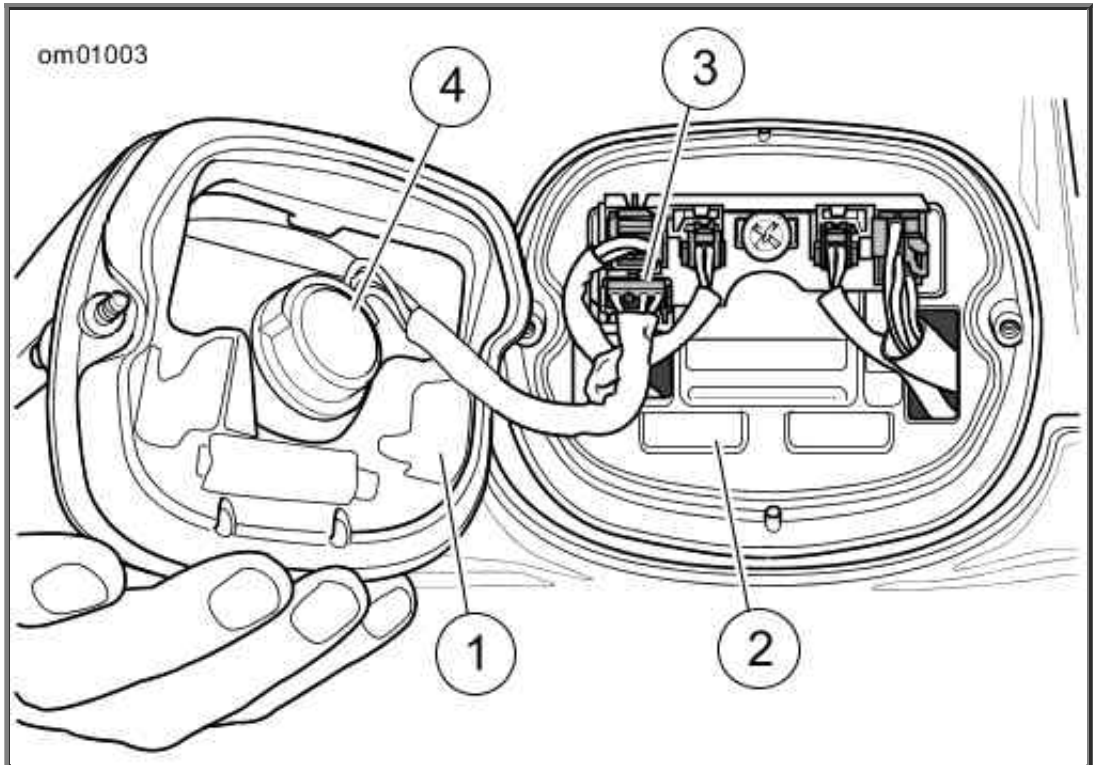

1. Lens
2. Base
3. Tail lamp connector
4. Bulb socket

Tail Lamp Assembly

XL1200C, XL1200CP XL1200CA, XL1200CB

Though similar in appearance to the standard style tail lamp, the tail lamp on XL1200C/CP/CA/CB models is an LED assembly. See a dealer or service manual for replacement.

XL883N, XL1200X, XL1200V

The tail and stop lamps are dual filament turn bulbs in the rear turn signal bullet housings with red lenses. To replace a tail or stop lamp, replace the turn signal bulbs. See Turn Signal Bulb Replacement: Bullet Style.

XL883N, XL1200X, XL1200V Models with LED Turn Signal Tail and

Stop Lamps

On International and Japanese XL883N, XL1200X and XL1200V models, the rear turn signal/tail lamps are LED assemblies. There are not replacement bulbs for this style lamp. The caps on the rear turn signals are not removeable. See a dealer or service manual for assembly replacement.

This feature may not be available in all markets.

Left Side Cover

The left side cover provides access to the battery and fuse block. No tools are required to remove or install the side cover.

Opening

NOTES:

- *The left side cover does not need to be completely removed from the vehicle to access the battery or fuses.*
- *Place a shop cloth or other clean, dry cloth over left passenger footpeg (if applicable). This will protect cover from damage.*

1. See Left Side Cover. Grasp left side cover at upper corners and gently pull away from frame. Disengage the front clip first for easier opening.
2. While rotating top of cover out away from motorcycle, slide cover down slightly so mounting slot slides down from mounting tab on battery tray.

Closing

1. Raise the left side cover.
2. Align the barrel clips on the cover with the socket clips on the frame. Press the cover to secure.

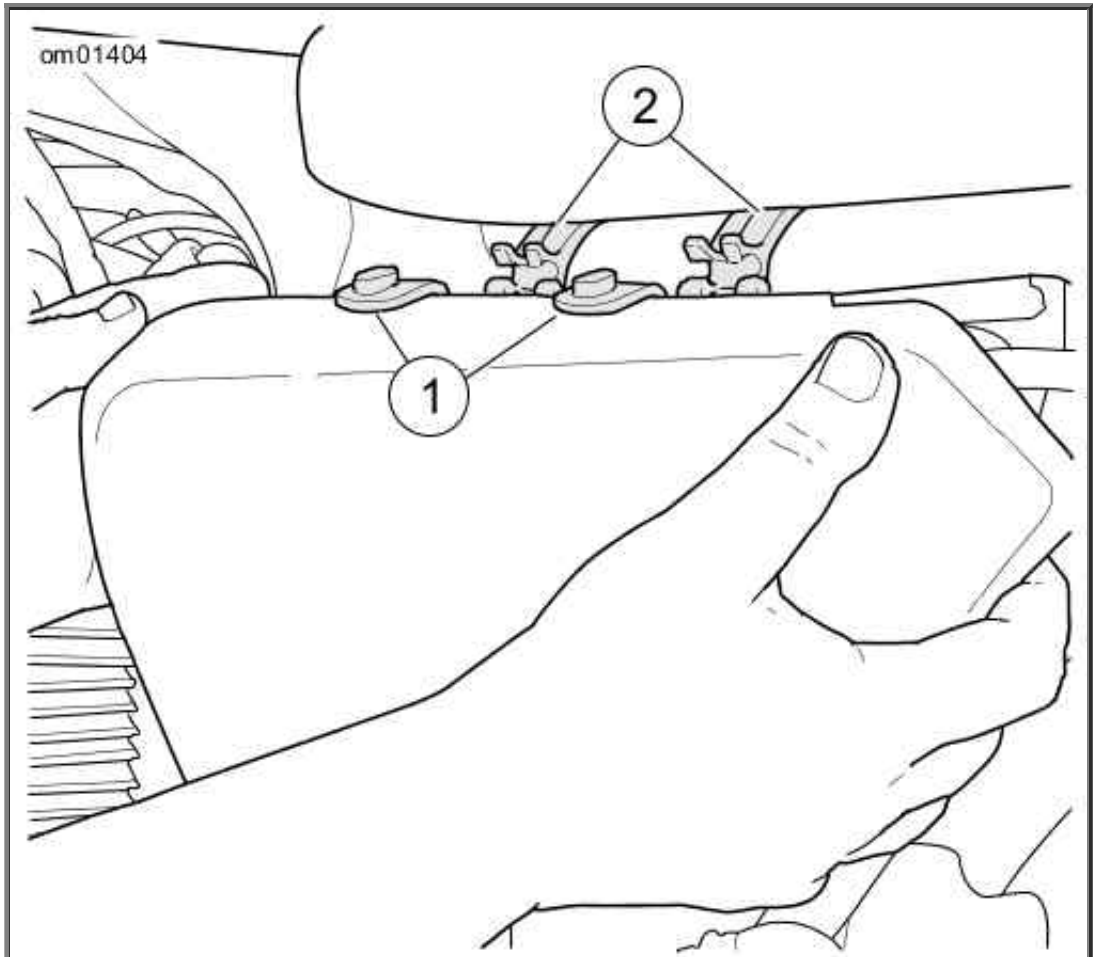

1. Barrel clips on cover
2. Socket clips on frame

Left Side Cover

Battery Maintenance

Type

Your motorcycle uses an Absorbed Glass Mat (AGM) battery. The AGM battery is permanently sealed, valve regulated, maintenance-free, lead/calcium and sulfuric acid battery. All batteries are shipped precharged and ready for service. Do not attempt to open the battery for any reason.

Antidotes for Battery Acid

CONTACT	TREATMENT
External	Flush with water.
Internal	Drink large quantities of milk or water, followed by milk of magnesia, vegetable oil or beaten eggs. Get immediate medical attention.
Eyes	Flush with water. Get immediate medical attention.

⚠WARNING

Batteries contain sulfuric acid, which could cause severe burns to eyes and skin. Wear a protective face shield, rubberized gloves and protective clothing when working with batteries. KEEP BATTERIES AWAY FROM CHILDREN. (00063a)

⚠WARNING

Explosive hydrogen gas, which escapes during charging, could cause death or serious injury. Charge battery in a well-ventilated area. Keep open flames, electrical sparks and smoking materials away from battery at all times. KEEP BATTERIES AWAY FROM CHILDREN. (00065a)

⚠WARNING

Batteries, battery posts, terminals and related accessories contain lead and lead compounds, and other chemicals known to the State of California to cause cancer, and birth defects or other reproductive harm. Wash hands after handling. (00019e)

⚠WARNING

Never remove warning label attached to top of battery. Failure to read and understand all precautions contained in warning, could result in death or serious injury. (00064a)

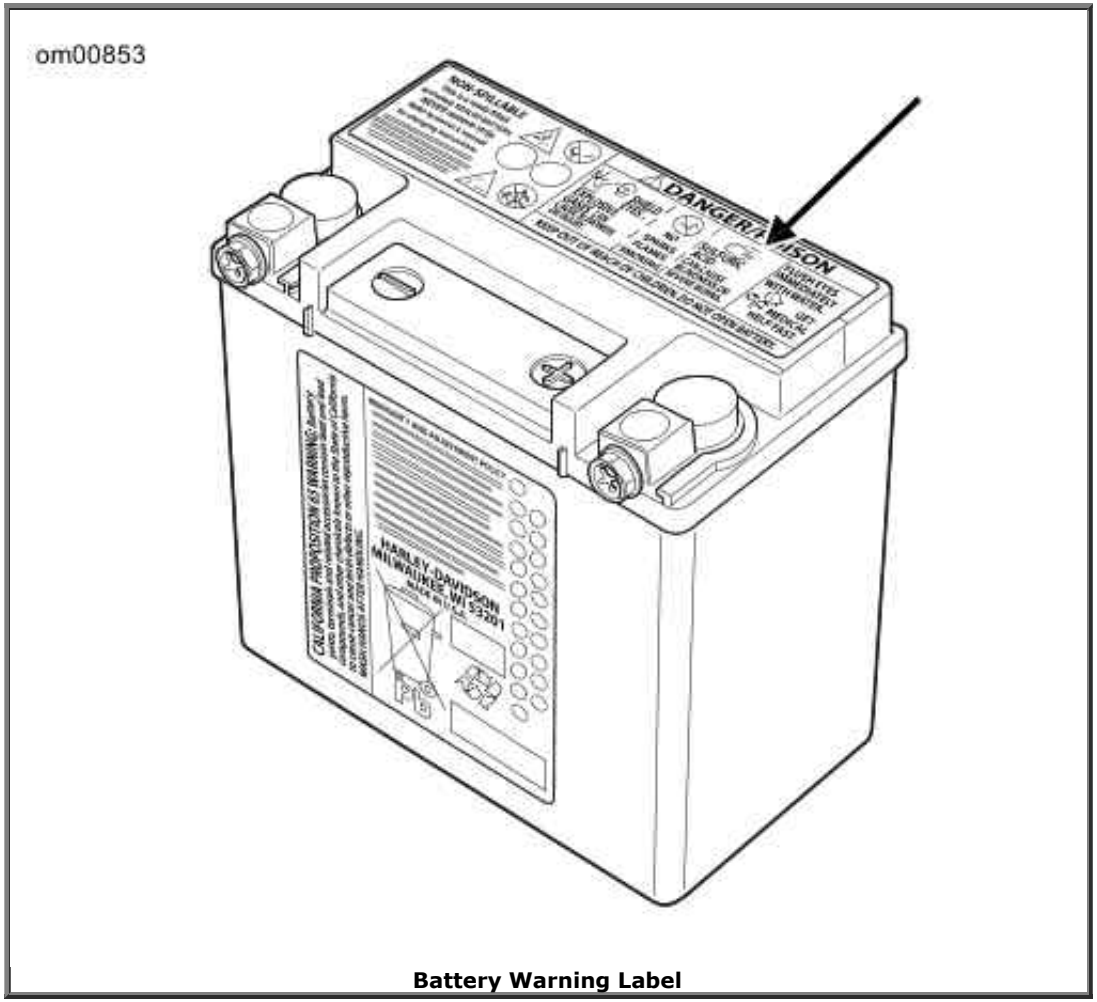

Battery Warning Label

1. Contents are corrosive
2. Wear safety glasses
3. Contents are explosive
4. Keep flames away
5. Read instructions
6. Keep away from children

Battery Warning Label

Voltmeter Test

The voltmeter test provides a general indicator of battery condition. Check the voltage of the battery to verify that it is in a 100 percent fully charged condition. If the open circuit (disconnected) voltage reading is below 12.7 V, charge the battery. Recheck the voltage after the battery has set for one to two hours. Refer to Voltmeter Test.

Voltmeter Test

READING IN VOLTS	PERCENT OF CHARGE
12.7	100
12.6	75
12.3	50
12.0	25
11.8	0

Cleaning and Inspection

Battery top must be clean and dry. Dirt and electrolyte on top of the battery can cause battery to self-discharge.

1. Clean battery top.
2. Clean cable connectors and battery terminals using a wire brush or fine grit sandpaper to remove any oxidation.
3. Inspect and clean the battery screws, clamps and cables. Check for breakage, loose connections and corrosion.
4. Check the battery posts for melting or damage caused by over-tightening.
5. Inspect the battery for discoloration, a raised top or a warped or distorted case. These conditions might indicate that the battery has been frozen, overheated or overcharged.
6. Inspect the battery case for cracks or leaks.

Charging

An automatic, constant monitoring battery charger/tender with a charging rate of 5 amps or less at less than 14.6 volts is recommended. The use of constant current chargers (including trickle chargers) to charge sealed AGM batteries is not recommended. Any overcharge will cause dry-out and premature battery failure. Never charge a battery without first reviewing the instructions for the charger being used. In addition to the manufacturer's instructions, follow these general safety precautions.

Charge the battery if any of the following conditions exist:

- Vehicle lamps appear dim.
- Electric starter sounds weak.
- Battery has not been used for an extended time.

⚠WARNING

Explosive hydrogen gas, which escapes during charging, could cause death or serious injury. Charge battery in a well-ventilated area. Keep open flames, electrical sparks and smoking materials away from battery at all times. KEEP BATTERIES AWAY FROM CHILDREN. (00065a)

⚠WARNING

Batteries contain sulfuric acid, which could cause severe burns to eyes and skin. Wear a protective face shield, rubberized gloves and protective clothing when working with batteries. KEEP BATTERIES AWAY FROM CHILDREN. (00063a)

1. Perform a voltmeter test to determine the state of charge. If battery needs to be charged, proceed to the next step.
2. Place the battery on a level surface.

⚠WARNING

Unplug or turn OFF battery charger before connecting charger cables to battery. Connecting cables with charger ON can cause a spark and battery explosion, which could result in death

or serious injury. (00066a)

⚠WARNING

Connect positive (+) battery cable first. If positive (+) cable should contact ground with negative (-) cable connected, the resulting sparks can cause a battery explosion, which could result in death or serious injury. (00068a)

⚠WARNING

Disconnect negative (-) battery cable first. If positive (+) cable should contact ground with negative (-) cable connected, the resulting sparks can cause a battery explosion, which could result in death or serious injury. (00049a)

CAUTION

Do not reverse the charger connections described in the following steps or the charging system of the motorcycle could be damaged. (00214a)

NOTES:

- *Do not use chargers with excessively high voltage designed for flooded batteries or excessively high current designed for much larger batteries. Do not charge at more than 5 amps or more than 14.6 volts.*
- *Most automatic, constant monitoring battery chargers are completely automatic and can be left connected to both AC power and to the battery that is being charged. When leaving this type of charger connected for extended periods of time, periodically check the battery to see if it is unusually warm. This is an indication that the battery may have a weak cell or internal short. Read the manufacturer's instructions for the charger being used.*

3. Connect the red battery charger lead to positive terminal of the battery.
4. Connect the black battery charger lead to negative terminal of the battery.

   NOTE:

   If the battery is still in the vehicle, connect the negative lead to the chassis ground. Make sure that the ignition and all electrical accessories are turned off.

5. Step away from the battery and turn on the charger.

⚠WARNING

Unplug or turn OFF battery charger before disconnecting charger cables from battery. Disconnecting clamps with charger ON can cause a spark and battery explosion, which could result in death or serious injury. (00067a)

6. After the battery is fully charged, turn OFF the charger. Disconnect the black battery charger lead from the negative terminal of the battery.
7. Disconnect the red battery charger lead from the positive terminal of the battery.

8. Mark the charging date on the battery.

Storage

If the motorcycle will not be operated for several weeks, such as during the winter season, remove the battery from the motorcycle and fully charge.

If the motorcycle will be stored with the battery installed, connect an automatic, constant monitoring charger/tender to maintain charge. See an authorized Harley-Davidson dealer for more information.

A battery that is removed from the vehicle is affected by self-discharge. A battery that is stored in the vehicle is affected by both self-discharge and, more significantly, parasitic loads.

- Batteries self-discharge at a faster rate at higher ambient temperatures.
- To reduce the self-discharge rate, store battery in a cool, dry place.
- Charge the battery every two weeks if stored in the vehicle.
- Charge the battery once per month if stored out of the vehicle.

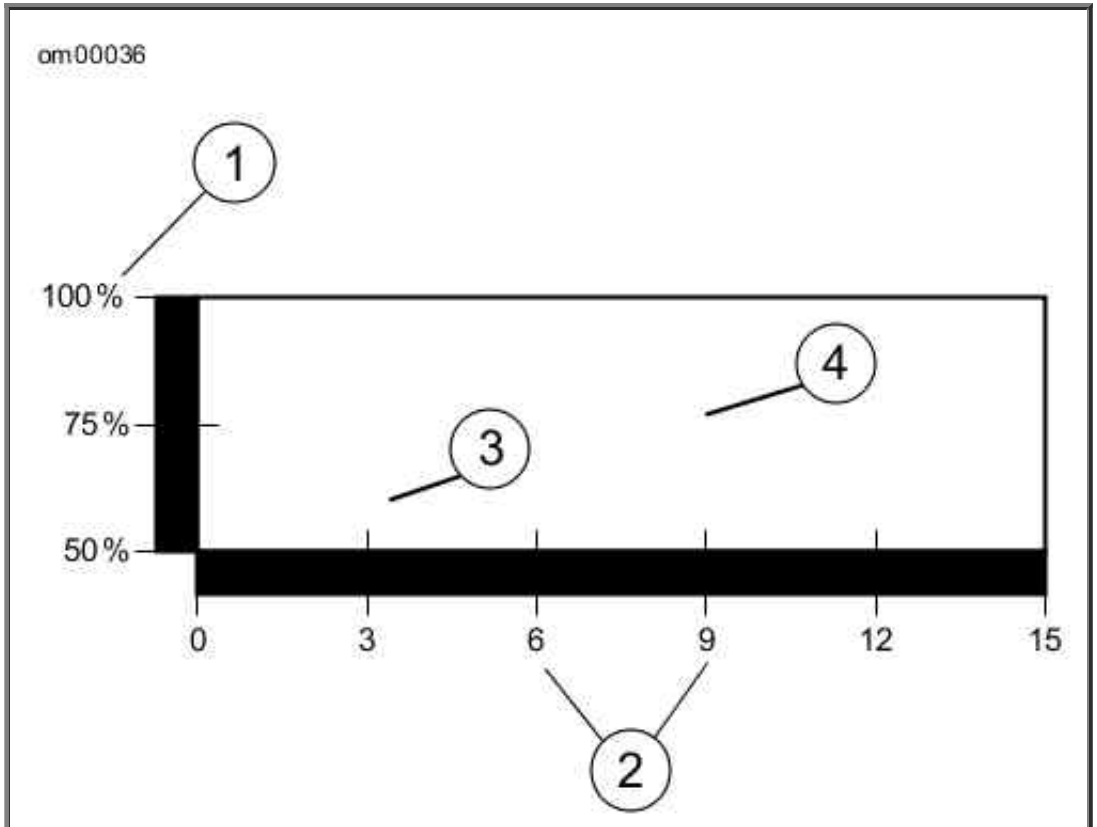

1. Capacity
2. Months of non-use
3. Measured at 105 °F (40 °C)
4. Measured at 77 °F (25 °C)

Effective Rate of Temperature on Battery Self-discharging Rate

Disconnection and Removal

⚠WARNING

Disconnect negative (-) battery cable first. If positive (+) cable should contact ground with negative (-) cable connected, the resulting sparks can cause a battery explosion, which could result in death or serious injury. (00049a)

1. Remove seat.

2. Remove left side cover.
3. **Keyless models with sirens:** Verify that fob is present. Switch OFF/RUN switch to RUN before removing main fuse or disconnecting battery.
4. See Battery Compartment. Pull fuse block (1) aside.
5. Remove main fuse.
6. Disconnect negative battery cable at negative terminal (2).
7. Remove positive terminal boot (3) from positive battery terminal. Disconnect positive battery cable.
8. See Battery Strap. Remove strap fastener (1).
9. Unhook battery strap from mount (2) on top of battery.
10. Remove battery.

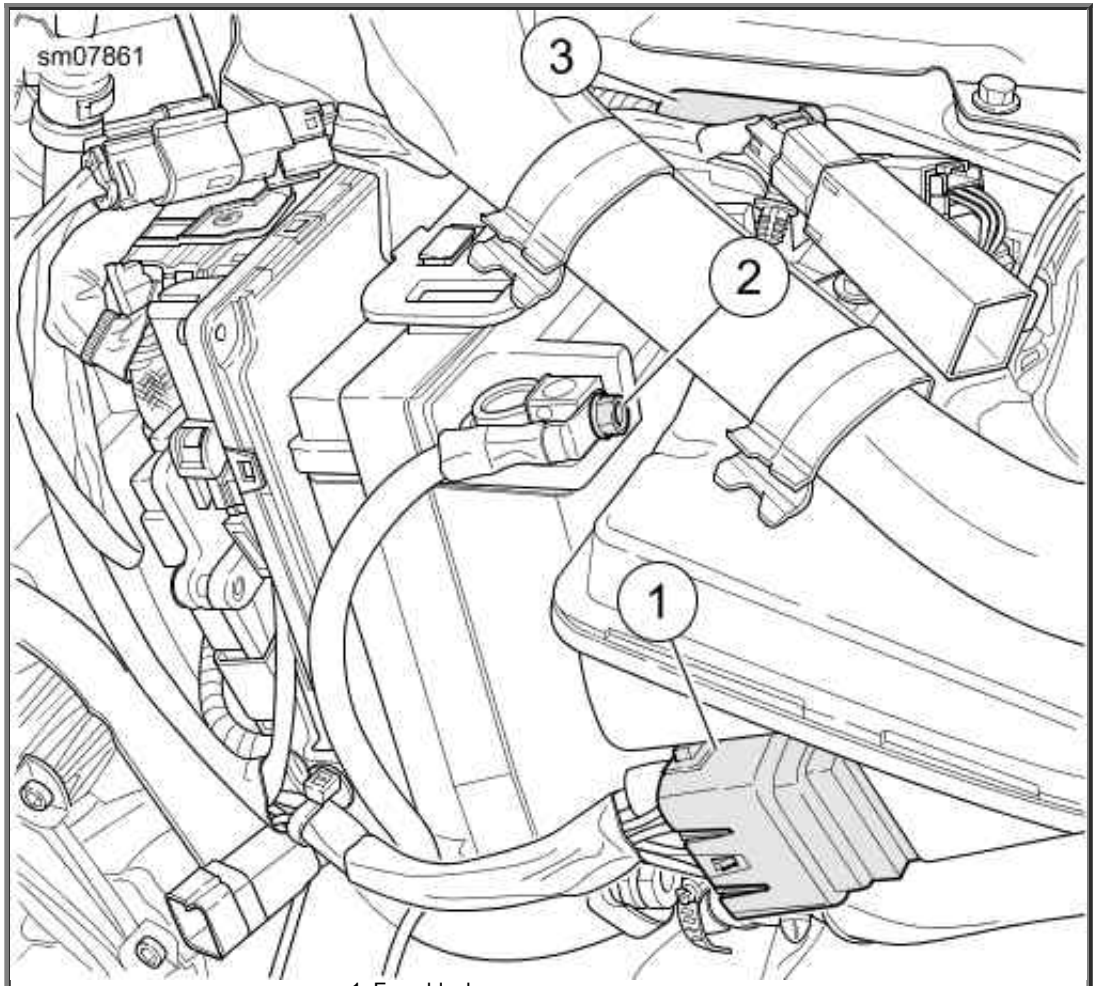

1. Fuse block
2. Negative terminal
3. Positive terminal boot

Battery Compartment

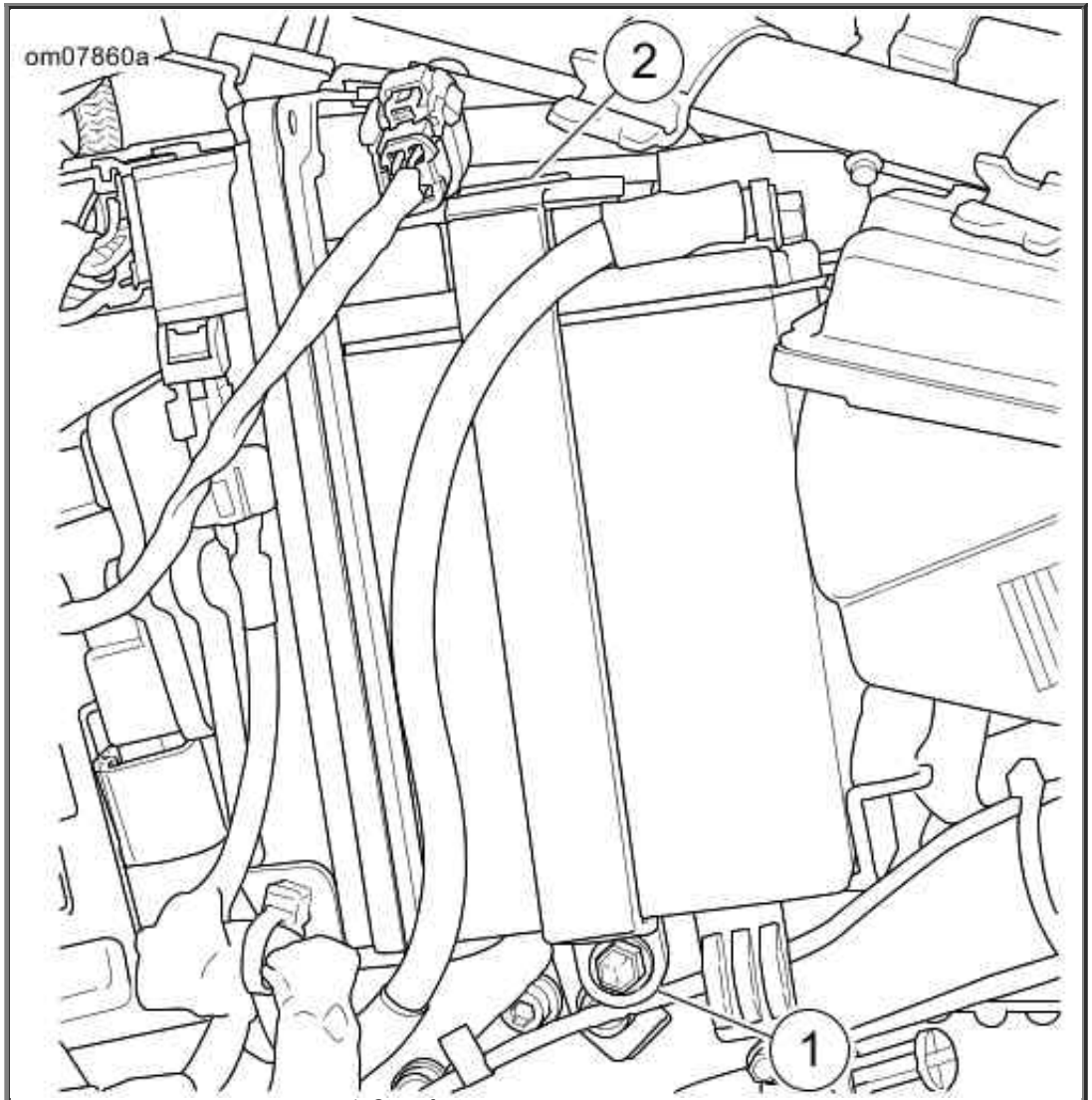

1. Strap fastener
2. Mount

Battery Strap

Installation and Connection

CAUTION

Connect the cables to the correct battery terminals. Failure to do so could result in damage to the motorcycle electrical system. (00215a)

1. Apply a light coat of petroleum jelly or corrosion retardant to negative and positive terminals.
2. Install battery.
3. See Battery Strap. Install top of battery strap to mount (2). Install strap fastener (1). Tighten to 72-96 in-lbs (8.1-10.8 Nm).

⚠WARNING

Connect positive (+) battery cable first. If positive (+) cable should contact ground with negative (-) cable connected, the resulting sparks can cause a battery explosion, which could result in death or serious injury. (00068a)

4. See Positive Terminal. Install positive terminal screw through main fuse cable (1) then positive cable (2). Tighten to 60-70 in-lbs (6.8-7.9 Nm).
5. Install rubber boot over terminal.

   NOTE:

   See Negative Battery Cable under Fuse Block Wire Harness. Route negative battery cable under fuse block wire harness.

6. Install screw through negative battery cable and into negative battery terminal. Tighten to 60-70 in-lbs (6.8-7.9 Nm).
7. Install main fuse.
8. Install fuse block to oil tank.
9. Install left side cover.

⚠WARNING

After installing seat, pull upward on seat to be sure it is locked in position. While riding, a loose seat can shift causing loss of control, which could result in death or serious injury. (00070b)

10. Install seat.

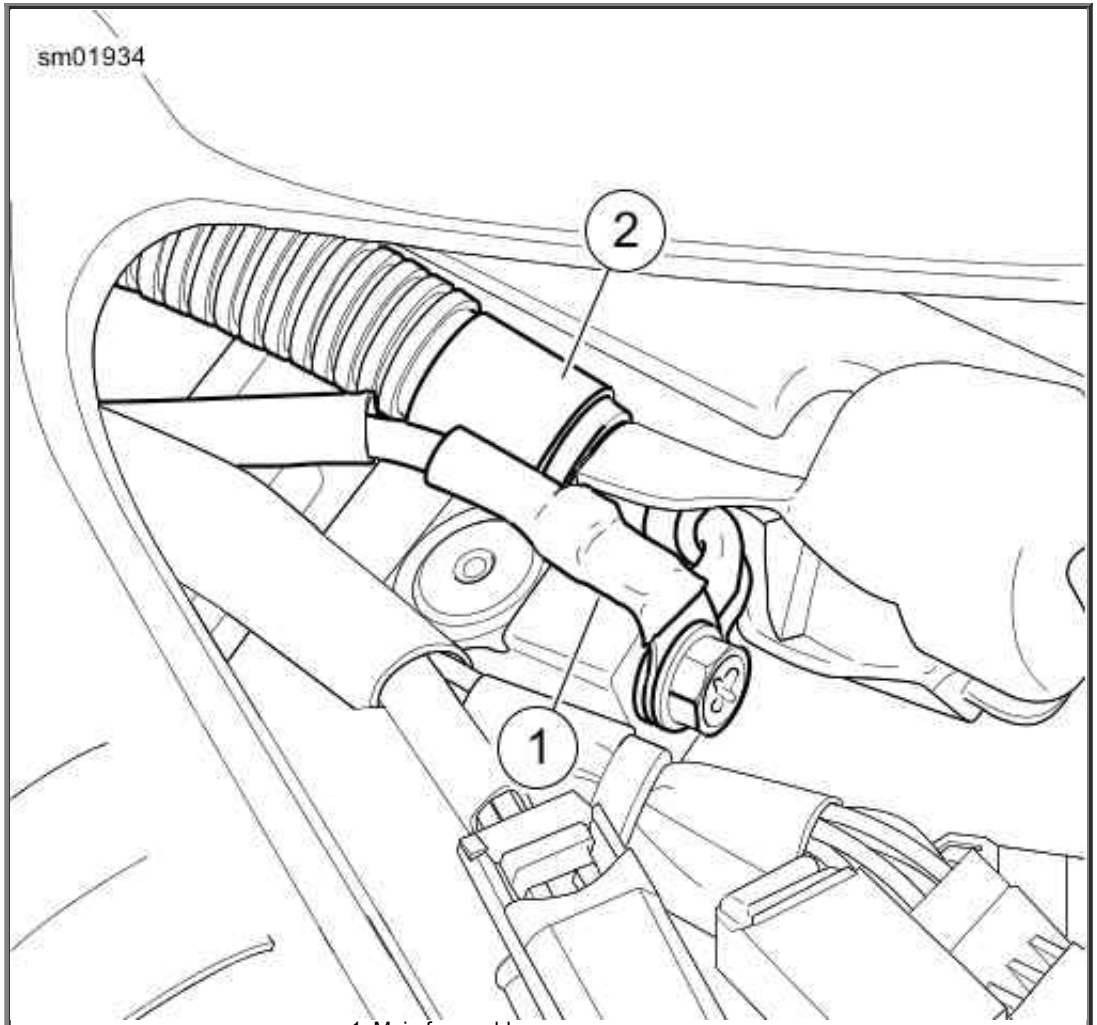

1. Main fuse cable
2. Positive cable

Positive Terminal

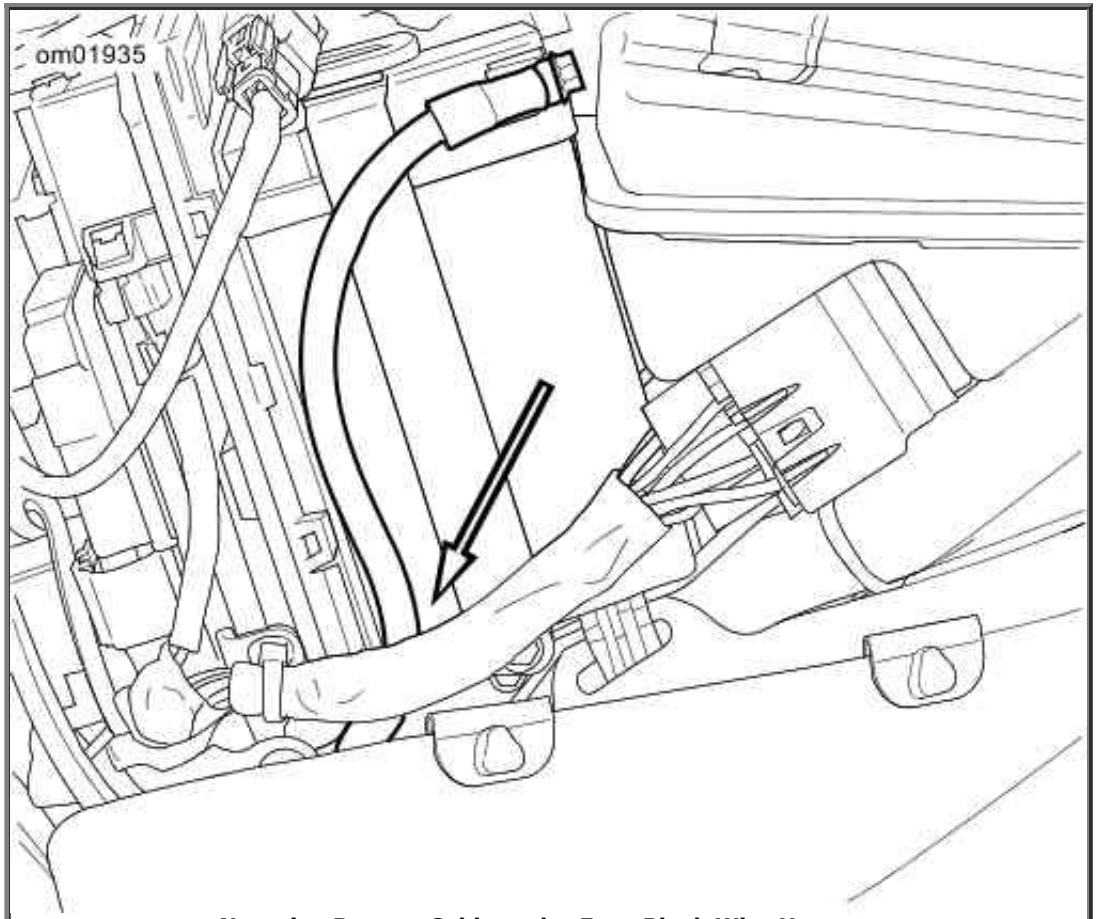

Negative Battery Cable under Fuse Block Wire Harness

Jump Starting

Jump starting a motorcycle is not recommended. However, in circumstances when a jump-start is necessary, use the following procedure.

⚠WARNING

Be sure jumper cables touch only appropriate battery terminals or ground. Allowing jumper cables to touch each other can result in sparks and a battery explosion, which could result in death or serious injury. (00072a)

⚠WARNING

Explosive hydrogen gas, which escapes during charging, could cause death or serious injury. Charge battery in a well-ventilated area. Keep open flames, electrical sparks and smoking materials away from battery at all times. KEEP BATTERIES AWAY FROM CHILDREN. (00065a)

CAUTION

Be sure both vehicles have the same battery voltage when jump starting. Connecting vehicles with different system voltages can result in vehicle damage. (00220c)

NOTES:

- *DO NOT jump-start from a running BOOSTER vehicle. The high output charging systems on some vehicles can damage the motorcycle's electrical components.*
- *Make sure the motorcycle and the BOOSTER vehicle are not touching one another.*

Connection

1. Turn off all unnecessary lamps and accessories.
2. See Jump-Start Cable Connections. Connect one end of a jumper cable to the motorcycle DISCHARGED battery positive terminal (1).
3. Connect the other end of the same cable to the BOOSTER vehicle battery positive terminal (2).

⚠WARNING

Do not connect negative (-) cable to or near the discharged battery negative (-) terminal. Doing so could cause a spark and explosion, which could result in death or serious injury. (00073a)

4. Connect one end of a jumper cable to the BOOSTER vehicle battery negative terminal (3).

CAUTION

Do not connect the negative (-) cable to painted or chrome parts. Doing so could result in discoloration at the attachment point. (00221a)

5. Connect other end of the same cable (4) to a safe motorcycle ground away from the DISCHARGED battery.
6. Start the motorcycle.

Disconnection

1. See Jump-Start Cable Connections. With the motorcycle continuing to run, remove the negative jumper cable motorcycle ground (4).

2. Remove the negative jumper cable from the BOOSTER vehicle battery negative terminal (3).
3. Remove the positive jumper cable from the BOOSTER vehicle battery positive terminal (2).
4. Remove the positive jumper cable from the DISCHARGED motorcycle battery positive terminal (1).

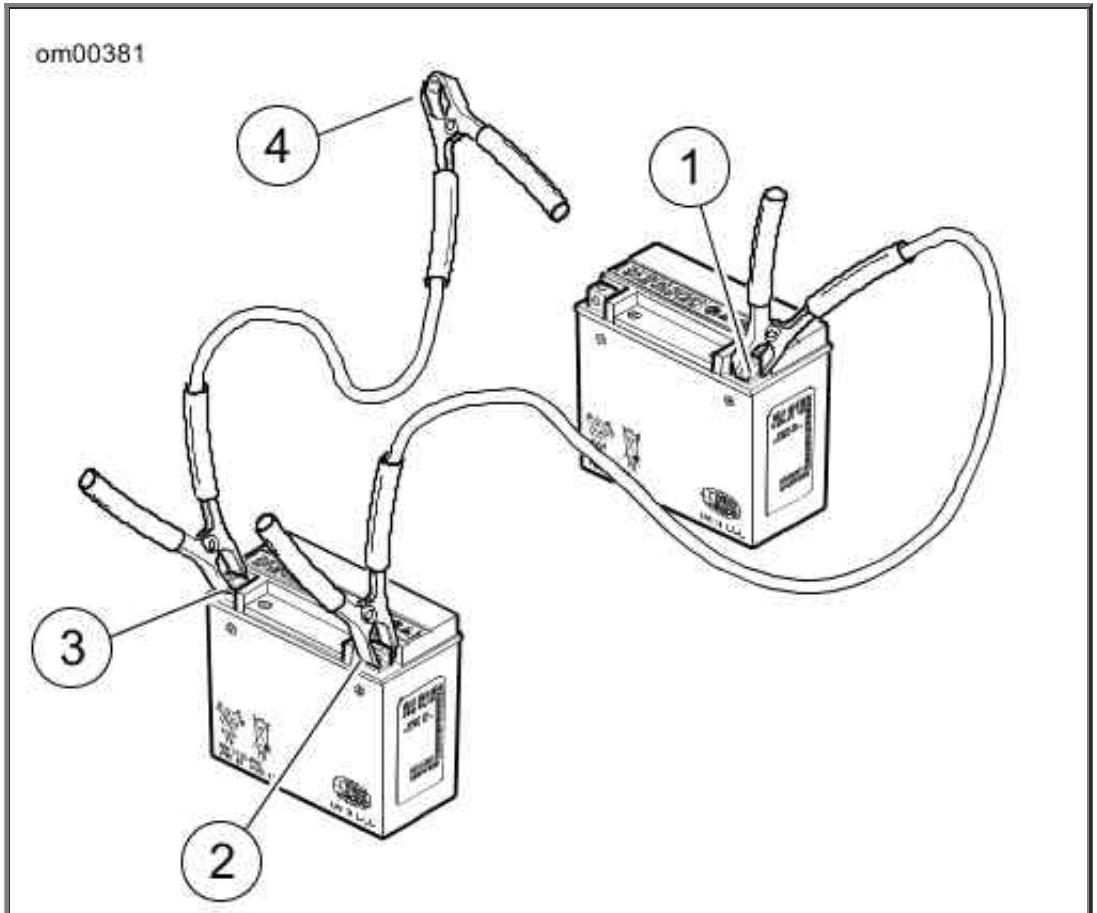

1. Discharged battery positive terminal
2. Booster battery positive terminal
3. Booster battery negative terminal
4. Ground

Jump-Start Cable Connections

Fuses

Fuse Replacement

CAUTION

Always use replacement fuses that are of the correct type and amperage rating. Use of incorrect fuses can result in damage to electrical systems. (00222a)

If replacing a fuse does not correct the problem or if a fuse is repeatedly blown, see a Harley-Davidson dealer.

1. Turn off the ignition.
    a. **Keyed ignition:** Turn the key to OFF.
    b. **Keyless ignition:** With a fob near, switch OFF/RUN switch to OFF.
2. Open left side cover.
3. See Fuse Block. Pull the fuse block from the oil tank.
4. Lift the side latches to remove the cover.

   NOTE:

   Models with sirens: *With fob present, turn OFF/RUN switch to RUN.*
5. See Fuses. Remove the suspect fuse.
    a. Main fuse (1)
    b. P&A (2)
    c. Battery (3)
6. Inspect the element. If the element is burned or separated, replace the fuse with an automotive type ATO fuse with the same Amp rating.
7. Align fuse block cover with retaining guide. Slide the fuse block cover until tab latches.
8. Press the fuse block into the recess in the oil tank.
9. Close left side cover.

Main Fuse

The 40 amp main fuse can be removed to disconnect power from the electrical system (except starter motor/solenoid).

To prevent a security siren from sounding, turn on the ignition with the hands-free fob present to disarm the security system before removing the main fuse.

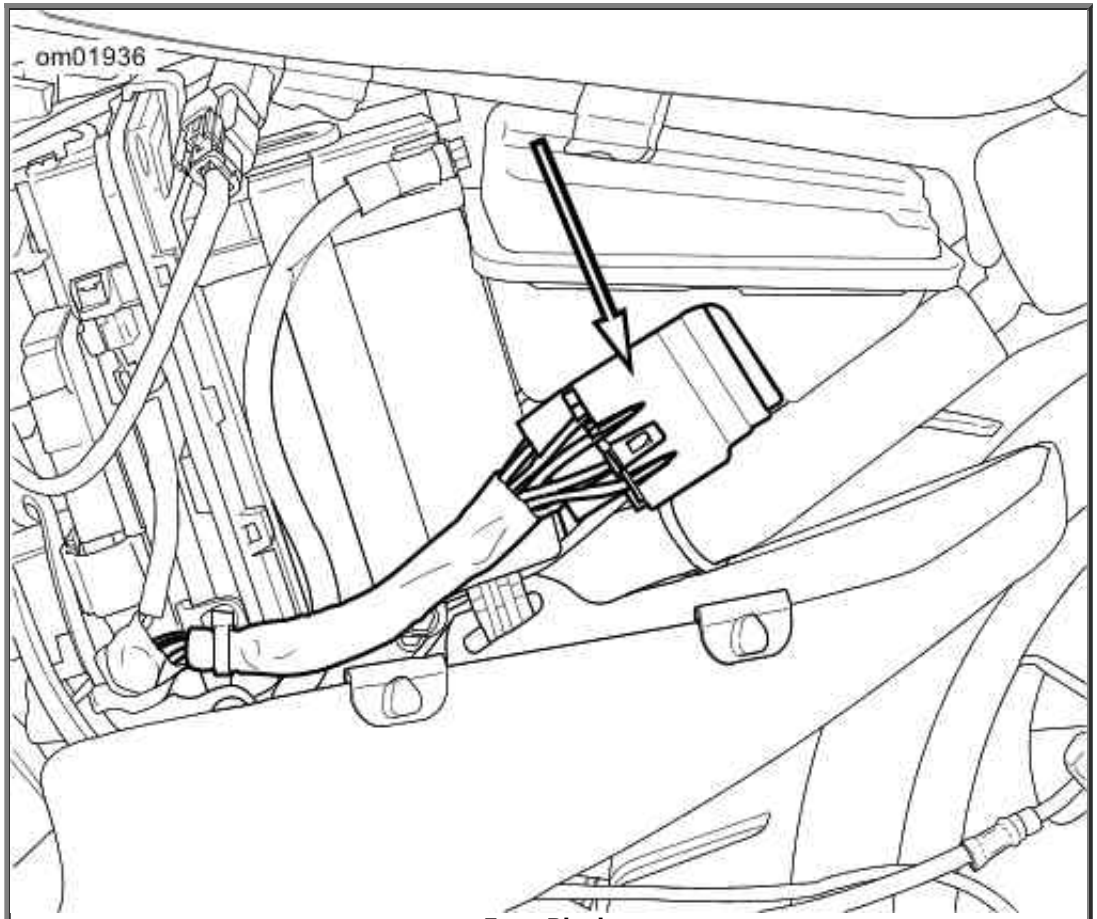

Fuse Block

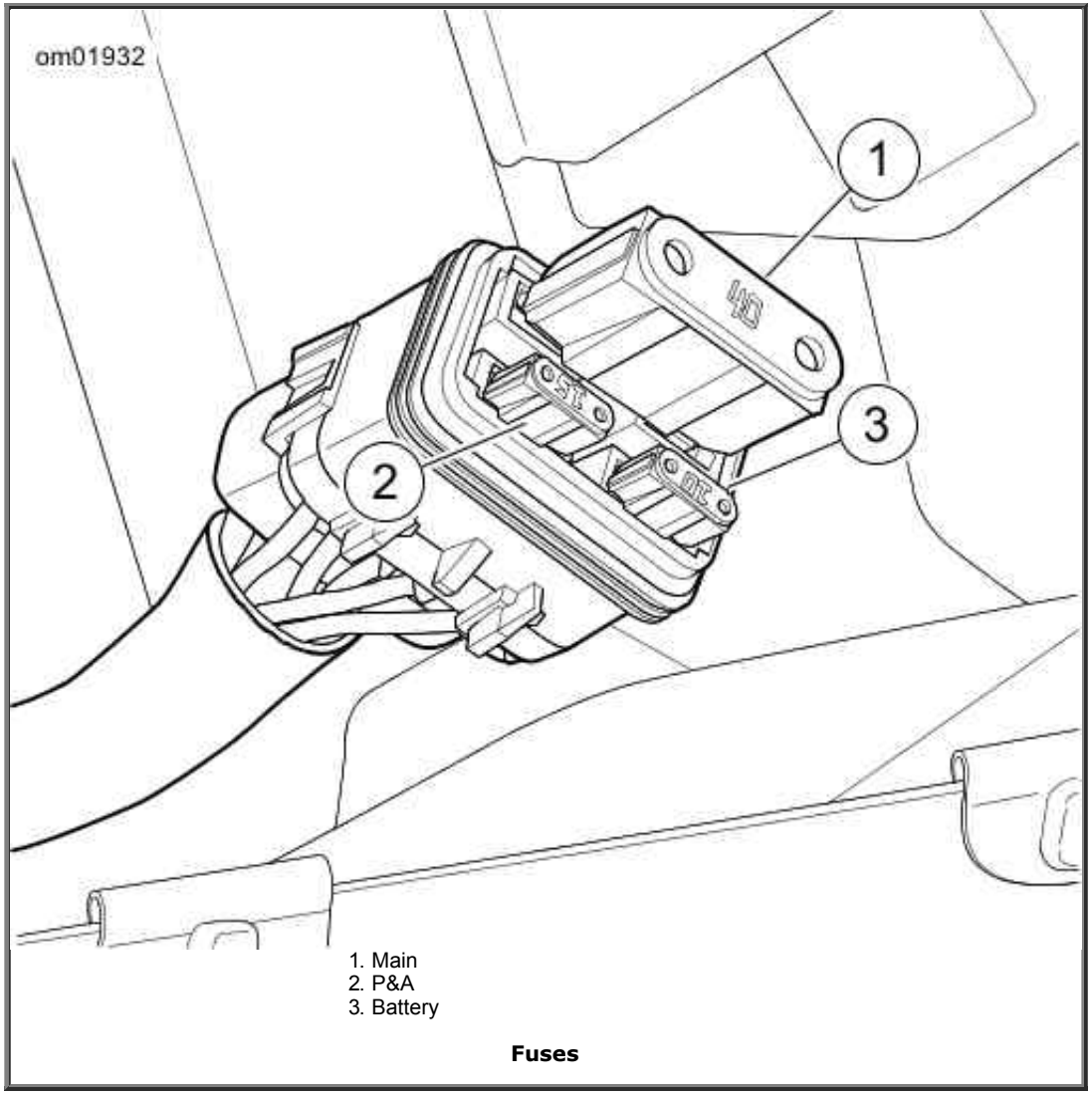

Fuses

Seat

Removal

1. See Remove Seat. Remove mounting screw (1) to detach seat from rear fender.
2. Press seat down and forward (2).

3. Lift (3) slightly to detach keyhole bracket from seat post.
4. Pull seat back (4) to detach seat tongue from fuel tank bracket.
5. Verify that tongue and mounting bracket are tightly secured to the seat bottom.

   NOTE:

   The passenger strap is not sold separately. Replace entire seat if the strap is damaged.

6. **Two-up seat:** Inspect passenger strap for damage or excessive wear.

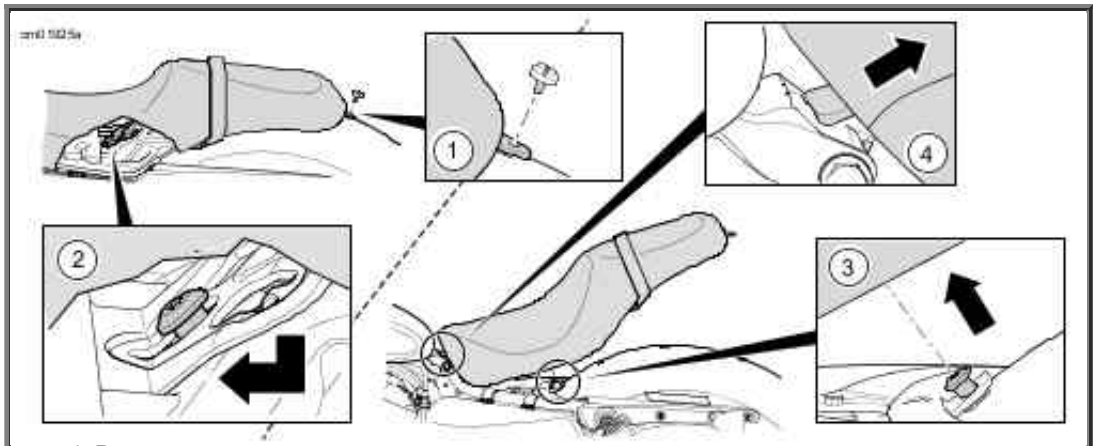

1. Remove screw
2. Press down and forward
3. Lift
4. Pull back

Remove Seat

Installation

1. See Solo and Two-Up Seats. Position seat on frame with mounting bracket (1) at rear.
2. Slide seat forward until the tongue (2) fits snugly under fuel tank bracket.
3. Push seat forward to engage keyhole (3) onto seat post. Pull seat back slightly.

   NOTE:

   Mounting bracket of solo seat uses forward hole in rear fender. Dual seat bracket uses rearward hole.

4. Install seat mounting screw with captive washer to fasten seat mounting bracket to top of rear fender. Tighten to 15-30 in-lbs (1.7-3.4 Nm).

⚠WARNING

After installing seat, pull upward on seat to be sure it is locked in position. While riding, a

loose seat can shift causing loss of control, which could result in death or serious injury. (00070b)

5. Pull up on seat to verify that it is locked at all three points.

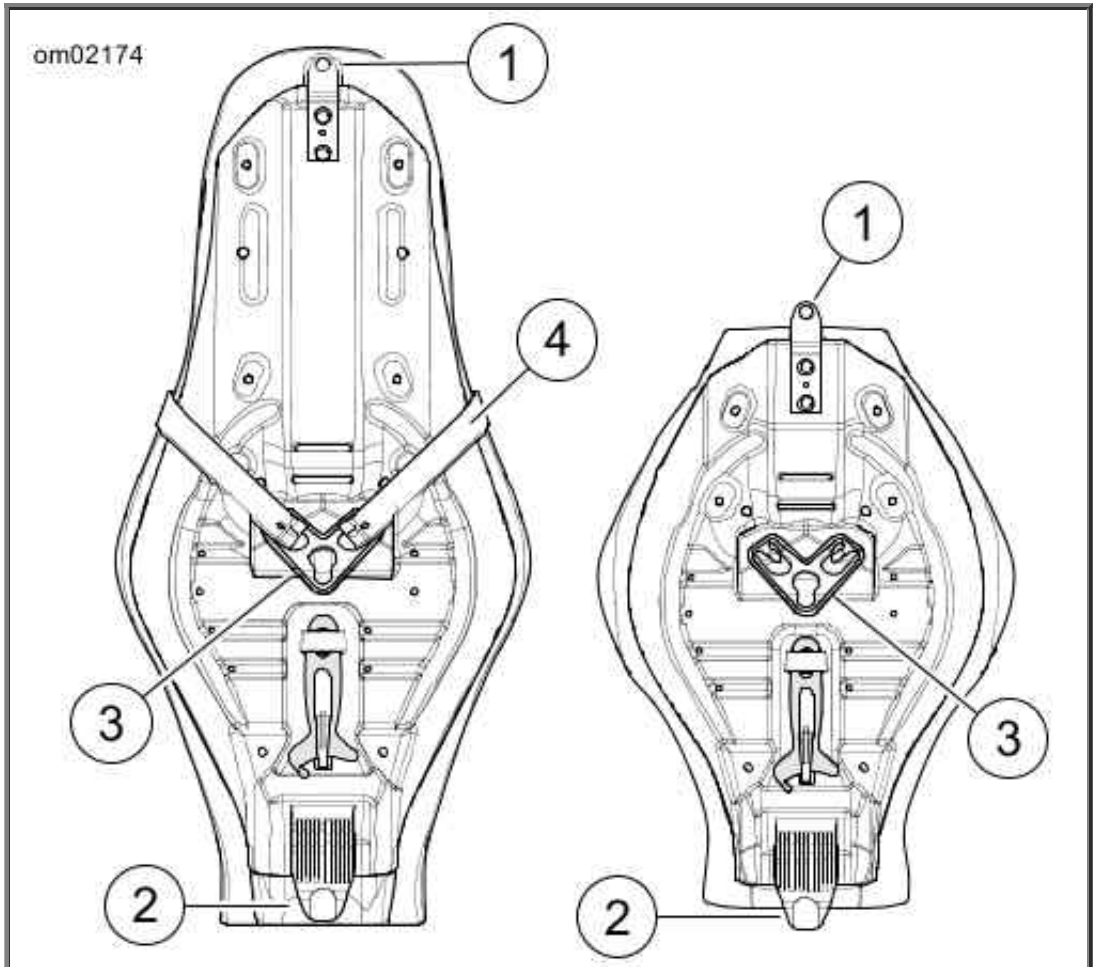

1. Mounting bracket
2. Tongue
3. Keyhole
4. Passenger strap

Solo and Two-Up Seats

Motorcycle Storage

Placing Motorcycle in Storage

CAUTION

Proper storage is important for the trouble-free operation of your motorcycle. See your Owner's Manual for storage recommendations or see a Harley-Davidson dealer. Improper storage procedures can lead to equipment damage. (00046a)

If the motorcycle is not to be ridden for several months, such as during the winter season, there are several tasks which must be performed. These steps protect parts against corrosion, preserve the battery and prevent the build-up of gum and varnish in the fuel system.

If possible, store the motorcycle in a dry area with a stable temperature. Keep the motorcycle away from harsh chemicals or other substances such as fertilizers or salt.

⚠WARNING

Do not store motorcycle with gasoline in tank within the home or garage where open flames, pilot lights, sparks or electric motors are present. Gasoline is extremely flammable and highly explosive, which could result in death or serious injury. (00003a)

NOTE:

Make a list of everything you do and fasten it to a hand grip. When you take the motorcycle out of storage, this list is your reference/checklist to get your motorcycle in operating condition.

1. Fill fuel tank. Add fuel stabilizer following manufacturer's instructions.
2. Warm motorcycle to operating temperature. Change oil and turn engine over to circulate the **new** oil.
3. Check and adjust belt if necessary.
4. Check tire pressure. Refer to Specified Tires for specified pressure.
5. Protect the body panels, engine, chassis and wheels from corrosion. Follow the cosmetic care procedures described in the Care and Cleaning section before storage.
6. Prepare battery for storage. See Battery Maintenance.

⚠WARNING

Explosive hydrogen gas, which escapes during charging, could cause death or serious injury. Charge battery in a well-ventilated area. Keep open flames, electrical sparks and smoking materials away from battery at all times. KEEP BATTERIES AWAY FROM CHILDREN. (00065a)

NOTES:

- *If the motorcycle is being stored with the security system armed, connect a 750mA SUPERSMART BATTERY TENDER 66000038 to maintain battery charge.*
- *If the motorcycle is being stored with the security system disarmed, turn on the motorcycle while the hands-free fob is present. This operation prevents the optional siren from sounding. Disconnect the negative battery cable and prepare battery for storage. See Battery Maintenance.*

7. Use a material such as light canvas that can breathe to cover the motorcycle. Plastic materials that do not breathe promote the formation of

condensation.

8. Remove the antennas or allow them to protrude through the cover, if equipped. Do not bend or tuck antennas under the cover.

Removing Motorcycle from Storage

⚠WARNING

The clutch failing to disengage can cause loss of control, which could result in death or serious injury. Prior to starting after extended periods of storage, place transmission in gear and push vehicle back and forth several times to assure proper clutch disengagement. (00075a)

NOTE:

Lubricants contaminated with water have a milky white appearance. Replace contaminated lubricants with the appropriate ***new*** *Harley-Davidson lubricant.*

1. Charge the battery.
2. Install battery. See Battery Maintenance.
3. Run motorcycle until engine is at normal operating temperature. Turn off engine.
4. Check engine oil level.
5. Check lubricant level.
6. Check controls to make sure that they are operating properly. Operate the front and rear brakes, throttle, clutch and shifter.
7. Check steering for smoothness by turning the handlebars through the full operating range.

⚠WARNING

Be sure tires are properly inflated, balanced, undamaged, and have adequate tread. Inspect your tires regularly and see a Harley-Davidson dealer for replacements. Riding with excessively worn, unbalanced, improperly inflated, overloaded or damaged tires can lead to tire failure and adversely affect stability and handling, which could result in death or serious injury. (00014b)

8. Check tire pressure. Refer to Specified Tires for specified pressure.
9. Check overall tire condition. See Tire Replacement.
10. Test all switches and lights for proper operation.
11. Check for any fluid leaks.

CAUTION

Turn engine over a few times to be sure there is no oil in the crankcase and that all oil has been pumped back into the oil tank. Stop engine and re-check oil level. Failure to do so can result in engine damage. (00071a)

Care and Cleaning

Cleaning and General Care

Clean and protect the cosmetic surfaces on your motorcycle as often as possible to inhibit rust and corrosion. After the motorcycle is cleaned, polish and seal the motorcycle to create a barrier of protection against the weather and harsh substances.

Harley-Davidson cleaning products are tested extensively for use on vehicle surfaces. These products are formulated to be compatible with one another. See a Harley-Davidson dealer to purchase recommended cleaning products. Refer to Recommended Cleaning and Care Products and Recommended Surface Care Products.

NOTES:

- *Use recommended surface care products. Do not use paper towels, terry cloths, cloth diapers or other materials with nylon fibers which can create fine scratches to surfaces.*
- *Dirty cleaning materials can scratch finished surfaces. Use only clean sponges and detailing cloths to prevent damage to the motorcycle.*
- *For repair of scratched surfaces, see a Harley-Davidson dealer.*

⚠WARNING

Observe warnings on labels of cleaning compounds. Failure to follow warnings could result in death or serious injury. (00076a)

⚠WARNING

Do not wash brake discs with cleaners containing chlorine or silicone. Cleaners containing chlorine and silicone can impair brake function, which could result in death or serious injury. (00077a)

CAUTION

Do not use a pressure washer to clean motorcycle. Using a pressure washer can result in equipment damage. (00489c)

CAUTION

Use of abrasive products or powered buffing equipment will cause permanent cosmetic

damage to body panels. Use only recommended products and techniques outlined in this manual to avoid damaging body panels. (00245b)

Recommended Cleaning and Care Products

PRODUCT PART NO.	PURPOSE	FRAME	BODY PANELS	WHEELS	DENIM FINISH	OTHER
BARE ALUMINUM WHEEL PROTECTANT - INDIVIDUAL WIPES 93600063	Corrosion control for bare aluminum surfaces.	No	No	Yes	No	"Burst" collection
BARE METAL POLISH 93600028 (U.S.) 93600083 (Non-U.S.)	Polishes non-clear coated polished aluminum or polished stainless steel surfaces.	As applicable				
BLACK LEATHER REJUVENATOR 93600033 (U.S.) 93600081 (Non-U.S.)	Rejuvenates black leather products so they look brand new.	No	No	No	No	Black leather goods
BOOT MARK REMOVER 93600001 (U.S.) 93600069 (Non-U.S.)	Removes boot marks from chrome exhaust components.	No	No	No	No	Exhaust system
BUG REMOVER 93600022 (U.S.) 93600075 (Non-U.S.)	Removes bugs from metal, plastic or painted surfaces. Also available as individual wipes (93600065).	Yes	Yes	Yes	Yes	
CHROME CLEAN & SHINE 93600031 (U.S.) 93600082 (Non-U.S.)	Shines chrome-plated surfaces and cleans brushed aluminum or stainless steel surfaces.	As applicable				
DENIM PAINT CLEANER 93600064 (U.S.) 93600078 (Non-U.S.)	Waterless quick cleaner and detailer.	Yes	Yes	Yes	Yes	
ENGINE BRIGHTENER 93600002 (U.S.) 93600068 (Non-U.S.)	Rejuvenates wrinkle black engine finish.	No	No	No	No	Wrinkle black engines
GLAZE POLY SEALANT 93600026 (U.S.) 93600079 (Non-U.S.)	Provides a protective barrier for glossy paint surfaces and chrome.	Yes	Yes	As applicable	No	
GLOSS DETAILER	Produces high gloss with UV protection. Allows chrome to breathe,	Yes	Yes	Yes	No	

93600062 (U.S.) 93600073 (Non-U.S.)	unlike wax. Good for windshields. Also available as individual wipes (97401-10).					
HARLEY TRAVEL CARE KIT 93600007	Travel size cleaning and care products.	Yes	Yes	Yes	Yes	
LEATHER PROTECTANT 93600034 (U.S.) 93600080 (Non-U.S.)	Weatherproofs and preserves leather products.	No	No	No	No	Leather goods
QUICK WASH 93600012 (U.S.) 93600071 (Non-U.S.)	A quick wash for a lightly soiled motorcycle. Cleans all surfaces, sheeting action prevents spots.	Yes	Yes	Yes	Yes	
SCRATCH & SWIRL REPAIR 93600025 (U.S.) 93600074 (Non-U.S.)	Removes fine scratches and swirls.	Yes	Yes	No	No	
SEAT, SADDLEBAG & TRIM CLEANER 93600010	Cleans and conditions vinyl, leather and plastic. Use on seats, saddlebags, inner fairings and any other trim.	No	No	No	No	Seats, saddlebags and trim
SPRAY CLEANER & POLISH 93600029 (U.S.) 93600084 (Non-U.S.)	Aerosol quick cleaner and detailer. Reduces static attraction to dust. Works great for removing bugs.	Yes	Yes	Yes	No	
SUNWASH BIKE SOAP 93600023 (U.S.) 93600077 (Non-U.S.)	Thorough washing of all surfaces with a wash mitt. Reduces hard water spots when washing a motorcycle in the sun.	Yes	Yes	Yes	Yes	
WHEEL & TIRE CLEANER 93600024 (U.S.) 93600076 (Non-U.S.)	Removes brake dust and road grime from wheels, tires and whitewalls. Do not use on frames or anodized parts.	No	No	Yes	No	Black-coated exhaust pipes and mufflers
WINDSHIELD CLEANER 93600067	Quick windshield cleaner in convenient single use wipe.	Yes	Yes	No	No	Windshield
WINDSHIELD WATER REPELLENT 93600032 (Global)	Allows water to bead and dissipate from the windshield.	No	No	No	No	Windshield

Recommended Surface Care Products

PRODUCT	PURPOSE

PART NO.	
BUG EATER SPONGE 93600110	When paired with water and BUG REMOVER, the BUG EATER SPONGE breaks down and dissolves baked on bugs and road grime.
CLEANING BRUSH KIT 94844-10	Brush kit for detailing your motorcycle.
DETAILING SWABS 93600107	Large cotton swabs for cleaning crevices and detailed surfaces.
DISPOSABLE DETAILING SOFT CLOTH 93600114	Non-absorbent cloth for applying and buffing SWIRL & SCRATCH REPAIR and GLAZE POLY SEALANT to painted surfaces or chrome.
HARLEY WASH BUCKET 94811-10	Wash bucket with apron to hold your supplies. Includes GRIT GUARD insert.
HOG BLASTER MOTORCYCLE DRYER 94651-09 (120 V) 94865-09 (220 V)	Blows a stream of warm dry filtered air. Reduces streaks and water spots.
MICROFIBER DETAILING CLOTH 94663-02	Highly absorbent detailing cloth for polishing and sealing. Contains no nylon fibers.
SYNTHETIC DRYING CHAMOIS 94791-01	Extra-absorbent, non-streaking synthetic towel for drying. Dampen towel and wring out before using for greatest absorbency.
WASH MITT 94760-99	Absorbent wool-blended washing mitten.
WHEEL & SPOKE BRUSH 43078-99	Cone-shaped scrub brush for wheels.

Washing the Motorcycle

Use only recommended cleaning and care products. Refer to Recommended Cleaning and Care Products and Recommended Surface Care Products.

NOTE:

During rinsing and washing, avoid direct spray on electrical components and any luggage or saddlebag sealing areas (if equipped). Avoid spraying water under leather saddlebag covers (if equipped).

Preparation

1. Allow motorcycle to cool before rinsing or washing. Spraying water on hot surfaces can leave water spots and mineral deposits.
2. Rinse the motorcycle from the bottom up.
3. To loosen dried bugs or hardened dirt, allow surfaces to soak under a damp towel.

Cleaning Wheels and Tires

1. Rinse wheel and tire surfaces. Avoid splashing brake dust on chrome or painted parts.
2. Apply WHEEL & TIRE CLEANER. Allow cleaner to set for one minute.
3. Clean the wheel with a BUG EATER SPONGE or WHEEL & SPOKE BRUSH. Thoroughly scrub all brake dust and other sediments off the wheel. Accumulated brake dust can trap moisture and dirt, which leads to wheel corrosion.
4. Rinse well.

Washing the Motorcycle

NOTE:

See the appropriate instructions in this section for cleaning leather, denim (flat) finishes, windshields or other special surfaces.

1. If necessary, use BUG REMOVER to remove bug splatters.
    a. Rinse the affected surfaces during preparation.
    b. Spray the area with BUG REMOVER.
    c. Wait one minute while the BUG REMOVER penetrates the bug splatters.
    d. Use the BUG EATER SPONGE while washing to easily remove bugs.
2. Prepare the wash.
    a. Fill a HARLEY WASH BUCKET with clean water.
    b. Add SUNWASH BIKE SOAP, following the directions on the package.
    c. Soak the WASH MITT and/or a BUG EATER SPONGE in the SUNWASH solution.
3. Wash all surfaces starting at the top working down toward the ground.
4. Rinse the motorcycle twice in both directions:
    a. Rinse from the bottom up.
    b. Rinse from the top down.

Drying the Motorcycle

1. Dry the surfaces from the top down using a SYNTHETIC DRYING CHAMOIS or a HOG BLASTER MOTORCYCLE DRYER. Avoid using any type of forced air on speakers or other sensitive components.
2. Dampen chamois in clean water and wring out the excess. The chamois is more absorbent when wet.
3. Wipe across the vehicle surface.
4. Repeat as necessary until surface is dry.

Polishing and Sealing

NOTE:

If motorcycle has denim finish, skip the Polishing and Sealing procedure.

1. Apply GLAZE POLY SEALANT with a DISPOSABLE DETAILING SOFT CLOTH or MICROFIBER DETAILING CLOTH, following the instructions on the package.
2. Buff with a DISPOSABLE DETAILING SOFT CLOTH.
3. Polish and seal the wheels to prevent corrosion.

Denim Finish Care

Some motorcycles have a denim (flat or matte) finish. The denim finish has qualities which differ from high gloss finishes on all other Harley-Davidson motorcycles. Like denim fabric, denim paint burnishes or mars with age and use that adds character and personality to the finish. Refer to Recommended Cleaning and Care Products for recommended products.

- If scratched, the color coat of paint does nick/scuff and these marks cannot be rubbed out.
- If polished, the finish will become less matte and more glossy over time.

How to Clean

For light deposits: Use DENIM PAINT CLEANER and a MICROFIBER DETAILING CLOTH. This treatment helps remove finger prints and light soil.

For heavier deposits: Use either SUNWASH BIKE SOAP and a clean WASH MITT or QUICK WASH. Rinse thoroughly with clean water.

Leather and Vinyl Care

CAUTION

Do not use bleach or detergents containing bleach on saddlebags, seats, tank panels or painted surfaces. Doing so can result in equipment damage. (00229a)

Do not use ordinary soap to clean leather or fur. It could dry or remove the oils from the leather.

Leather, vinyl and other synthetic surfaces must be periodically cleaned and treated to maintain its appearance and extend its life. Clean and treat these surfaces once a season or more frequently under adverse conditions.

These surfaces are not designed for long-term exposure to inclement weather. Protect these surfaces with an HARLEY-DAVIDSON SEAT RAIN COVER or MOTORCYCLE STORAGE COVER (sold separately).

1. Vacuum or blow dust off surface.
2. Thoroughly clean surfaces with SEAT, SADDLEBAG & TRIM CLEANER, following directions on the bottle.
3. Allow the material to dry naturally and completely at room temperature before applying other products to the material. Do not use artificial means to dry the material quickly.
4. For leather only, rejuvenate faded black surfaces with BLACK LEATHER REJUVENATOR. Apply LEATHER PROTECTANT to weatherproof and preserve the leather.

NOTE:

Many Harley-Davidson accessories and seats are made of either treated or untreated leather or have leather inserts. Natural materials age differently and require different care than man-made materials. Seat covers and panels made of leather gain "character", such as wrinkles, with age. Leather is porous and organic and each leather product settles into its own distinct form with use. Your leather product matures into its own custom shape and style from the sun, rain and time. This maturing is natural and enhances the custom quality of your Harley-Davidson motorcycle.

Wheel Care

Wheels can corrode or be cosmetically damaged if they are not properly cleaned, polished and preserved. Cleaning and sealing wheels with the proper treatment guards against pitting, corrosion, spots and stains. Harley-Davidson recommends that wheels be cared for weekly. Corrosion to wheels is not considered a defect in materials or workmanship.

NOTE:

Bare aluminum wheels do not have a protective coating and corrode unless properly treated. Apply BARE ALUMINUM WHEEL PROTECTANT when purchasing the motorcycle and at least twice per year to prevent cosmetic damage.

Keep wheels clean from harsh chemicals, acid-based wheel cleaners, salt and accumulated brake dust. After washing wheels with WHEEL & TIRE CLEANER, use the polish and sealing products according to the type of wheels. Refer to Wheel Polish and Sealing Products.

Wheel Polish and Sealing Products

WHEELS	PRODUCT	DESCRIPTION
Anodized	GLAZE POLY SEALANT	Cleans surface, removes fine scratches. Provides a breathable sealant against acid, chemicals, salt and brake dust.
	GLOSS DETAILER	Seals and protects against harsh chemicals, salt and other sediments to prevent corrosion.
Bare aluminum	BARE ALUMINUM WHEEL PROTECTANT	Creates a protective coating for bare aluminum wheels to prevent oxidation. Individual wipe.
Chrome	CHROME CLEAN & SHINE	Non-abrasive cleaner to brighten chrome wheels.
	GLOSS DETAILER	Seals and protects against harsh chemicals, salt and other sediments to prevent oxidation.
Polished aluminum or stainless steel	BARE METAL POLISH	Microabrasive polish to refurbish polished wheels. Do not use on chrome.

Windshield Care

CAUTION

Polycarbonate windscreens/windshields require proper attention and care to maintain. Failure to maintain polycarbonate properly can result in damage to the windscreen/windshield. (00483d)

CAUTION

Use only Harley-Davidson recommended products on Harley-Davidson windshields. Do not use harsh chemicals or rain sheeting products, which can cause windshield surface damage, such as dulling or hazing. (00231c)

- Powdered, abrasive or alkaline cleanser can damage windscreen/windshields. Ammonia-based window cleaners cause permanent yellow effects to windshields.
- Do not use gas station windshield cleaner as finish can be damaged.
- Do not use a brush or squeegee as finish can be damaged.
- Do not clean in hot sun or high temperature.

Windshields require special care. However, windshields can be washed with WINDSHIELD CLEANER - INDIVIDUAL WIPES, SUNWASH BIKE SOAP or QUICK WASH when washing the entire motorcycle. Refer to Recommended Cleaning and Care Products.

NOTES:

- *To treat windshields with water repellent use WINDSHIELD WATER REPELLENT.*
- *Use BUG REMOVER to soft bug splatters. Wipe clean with a BUG EATER SPONGE.*
- *Covering windshields with a clean, wet cloth for approximately 15-20 minutes before washing makes dried bug removal easier.*

1. Use WINDSHIELD CLEANER to detail windshields.
2. Wipe dry with a clean MICROFIBER DETAILING CLOTH.

NOTE:

To minimize swirl marks, clean windshield when the motorcycle is cool and parked in the shade. Faint swirl marks are normal. Swirl marks are more visible on tinted windshields.

Hard Candy Custom Paint

Hard Candy Custom paint features a unique coating which may include flakes of varied color and size. The surface may have an uneven texture, resulting from multiple layers of clear coat being applied over heavy concentrations of metallic flake. Each part has its own distinct and custom appearance. These are normal characteristics of the custom paint process, and do not reflect warrantable conditions.

Troubleshooting

Troubleshooting: General

⚠WARNING

The troubleshooting section of the Owner's Manual is a guide to diagnose problems. Read the service manual before performing any work. Improper repair and/or maintenance could result in death or serious injury. (00080a)

Use the following checklists for troubleshooting. Carefully check each cause because more than one condition can cause trouble.

Engine

Starter Does Not Operate or Does Not Turn Engine Over

1. Engine OFF/RUN switch off.
2. Ignition switch off.
3. Discharged battery or loose or corroded connections (solenoid chatters).
4. Clutch lever not squeezed against handlebar or transmission not in neutral.
5. Jiffy stand not in retracted position (for models equipped with jiffy stand interlock).
6. Blown fuse.

Engine Turns Over But Does Not Start

1. Fuel tank empty.
2. Fuel filter clogged.
3. Discharged battery or loose or damaged battery terminal connections.
4. Fouled spark plugs.
5. Spark plug cable connections loose or in bad condition and shorting.
6. Loose or corroded wire or cable connection at coil or battery.
7. Fuel pump inoperative.
8. Blown fuse.

Starts Hard

1. Spark plugs in bad condition, have improper gap or are partially fouled.
2. Spark plug cables in bad condition and leaking.
3. Battery nearly discharged.
4. Loose wire or cable connection at one of the battery terminals or at coil.
5. Engine oil too heavy (cold weather).
6. Fuel tank vent plugged or fuel line closed off, restricting fuel flow.
7. Water or dirt in fuel system or filter.
8. Fuel pump inoperative.

Starts But Runs Irregularly or Misses

1. Spark plugs in bad condition or partially fouled.
2. Spark plug cables in bad condition and leaking.
3. Spark plug gap too close or too wide.
4. Battery nearly discharged.
5. Damaged wire or loose connection at battery terminals or coils.
6. Intermittent short circuit due to damaged wire insulation.
7. Water or dirt in fuel system or filter.
8. Fuel vent system plugged. See dealer.
9. One or more injectors fouled.

A Spark Plug Fouls Repeatedly

1. Fuel mixture too rich.
2. Incorrect spark plug for service

Pre-ignition or Detonation (Knocks or Pings)

1. Incorrect fuel.
2. Incorrect spark plug for service

Overheats

1. Insufficient oil supply or oil not circulating.
2. Heavy carbon deposit from lugging engine. See dealer.
3. Insufficient air flow over cylinder heads during extended periods of idling or parade duty.

Excessive Vibration

1. Rear fork pivot shaft loose. See dealer.
2. Front engine mounting bolts loose. See dealer.
3. Front chain or links tight as a result of insufficient lubrication or belt badly worn.
4. Engine to transmission mounting bolts loose (applicable models). See dealer.
5. Damaged frame. See dealer.
6. Wheels and/or tires damaged. See dealer.
7. Vehicle not properly aligned. See dealer.

Engine Oil Not Circulating (Oil Pressure Lamp Lit)

1. Insufficient or diluted oil supply.
2. Oil feed clogged with ice and sludge in freezing weather.
3. Grounded oil signal switch wire or faulty signal switch. See dealer.
4. Damaged or improperly installed check valve. See dealer.
5. Oil pump problem. See dealer.

Electrical System

Alternator Does Not Charge

1. Regulator not grounded. See dealer.
2. Engine ground wire loose or damaged. See dealer.
3. Loose or damaged wires in charging circuit. See dealer.

Alternator Charge Rate is Below Normal

1. Weak battery.
2. Excessive use of add-on accessories.
3. Loose or corroded connections.
4. Extensive periods of idling or low speed riding.

Transmission

Transmission Shifts Hard

---

1. Bent shifter rod. See dealer.

Transmission Jumps Out of Gear

---

1. Worn shifter dogs in transmission. See dealer.

Clutch Slips

---

1. Clutch controls improperly adjusted. See dealer.
2. Worn friction discs. See dealer.
3. Insufficient clutch spring tension. See dealer.

Clutch Drags or Does Not Release

---

1. Clutch controls improperly adjusted. See dealer.
2. Primary chaincase overfilled.
3. Clutch discs warped. See dealer.

Clutch Chatters

---

1. Friction discs or steel discs worn or warped. See dealer.

Brakes

Brakes Do Not Hold Normally

1. Master cylinder low on fluid. See dealer.
2. Brake line contains air bubbles. See dealer.
3. Master cylinder piston worn. See dealer.
4. Brake pads contaminated with grease or oil. See dealer.
5. Brake pads badly worn. See dealer.
6. Brake disc badly worn or warped. See dealer.
7. Brake fades because of heat build up. Excessive braking or brake pads dragging. See dealer.
8. Brake drags. Insufficient hand lever free play. See dealer.

Accessories

Genuine Motor Parts and Accessories

Stop at your Harley-Davidson dealer to pick up a copy of the Genuine Motor Parts and Accessories catalog or go to *www.harley-davidson.com* to view thousands of Genuine Motor Accessories that are available for Harley-Davidson motorcycles.

The website includes the following tools and resources for accessorizing and personalizing your motorcycle.

Online Catalog

The full Genuine Motor Parts and Accessories catalog is available online in PDF format. The catalog includes hundreds of pages of Harley-Davidson accessories and maintenance products. For performance parts, check out the Screamin' Eagle Pro Racing Parts catalog.

NOTE:

Performance parts may not be available in some countries due to local restrictions. See your Harley-Davidson dealer for more information.

Shop for Your Bike

Browse through categories of accessories and options available specifically for your motorcycle. View product descriptions, pricing, fitment and online instruction sheets for many of the available products.

Customizer

Virtually redesign your motorcycle with parts and accessories using the Customizer. This tool allows you to experiment with different accessory and color combinations and shows how your motorcycle would look with the accessories installed. You can easily create a custom list of accessories to print out for your dealer.

Fit Shop

Learn how to customize your motorcycle to fit you personally. See how making changes to the suspension, seat, handlebars or foot controls can enhance the ergonomics and comfort of your motorcycle.

Custom Seats

Create a custom seat using selected designs, colors and textured materials. Custom seat specifications can be easily printed out for your dealer.

Custom Coverage

Add Accessories to Your New Motorcycle

NOTE:

Custom Coverage is not offered in some regions. See an authorized Harley-Davidson dealer to determine the parts and accessories warranty policies, terms and conditions in your area.

Harley-Davidson offers the Custom Coverage extended limited warranty for parts and accessories that are purchased and installed at an authorized Harley-Davidson dealer within 60 days after retail purchase of the motorcycle.

This limited warranty provides coverage for eligible *street legal* Genuine Harley-Davidson Motor Parts and Genuine Harley-Davidson Motor Accessories. This extended coverage on parts and accessories remains in effect for the remainder of the Harley-Davidson Motorcycle Limited Warranty for the vehicle. See Limited Motorcycle Warranty.

Purchases qualifying for Custom Coverage must be made at an authorized Harley-Davidson dealership within 60 days after retail purchase. Additional parts and accessories may be purchased and installed as often as desired within 60 days after retail purchase of the motorcycle.

Parts and accessories must be purchased and installed at an authorized Harley-Davidson dealership to qualify for Custom Coverage. Parts and accessories purchased via the internet are not eligible.

Warranties and Responsibilities

Warranty and Maintenance

This owner's manual contains your new motorcycle limited warranty and your owner's maintenance record.

It is your responsibility as the owner to follow the maintenance schedule at the mileage intervals as specified in the owner's manual. All of the specified

maintenance services must be performed on schedule to keep your limited warranty valid.

Some countries, states or other locations may require all regular maintenance and service work to be done by an authorized Harley-Davidson dealer for your limited warranty to remain in effect. Check with your authorized Harley-Davidson dealer for local requirements.

1. Make an appointment with a Harley-Davidson dealer for inspection and service prior to the first 1000 mi 1600 km , and as soon as possible after any issue arises.
2. Bring this owner's manual with you when you visit your authorized Harley-Davidson dealer to have your motorcycle inspected and serviced.
3. Have the dealer technician sign the maintenance record in the owner's manual at the proper mileage interval. These records should be retained by the owner as proof of proper maintenance.
4. Keep receipts covering any parts, service or maintenance performed.

These records should be transferred to each subsequent owner.

Use only Harley-Davidson approved parts and accessories that have been designed, tested and approved for your model and model year motorcycle.

Use of aftermarket performance parts may void all or parts of your limited warranty. See an authorized Harley-Davidson dealer for details.

Harley-Davidson authorized dealerships are independently owned and operated and may sell and install parts and accessories that are not manufactured or approved by Harley-Davidson for use on your motorcycle. Therefore, you should understand that Harley-Davidson is not and cannot be responsible for the quality, suitability, or safety of any non-Harley-Davidson part, accessory or design modification, including labor, which may be sold and/or installed by authorized Harley-Davidson dealerships.

Keeping It All Harley-Davidson

Genuine Harley-Davidson parts are engineered and tested specifically for use on your motorcycle. Insist that your authorized Harley-Davidson dealer uses only genuine Harley-Davidson replacement parts and accessories to keep your Harley-Davidson motorcycle and its limited warranty intact. Not all Harley-Davidson parts and accessories are appropriate for your model or model year motorcycle.

CAUTION

It is possible to overload your vehicle's charging system by adding too many electrical accessories. If the combined electrical accessories operating at any one time consume more electrical current than the vehicle's charging system can produce, the electrical consumption can discharge the battery and cause damage to the vehicle's electrical system. See an authorized Harley-Davidson dealer for advice about the amount of current consumed by additional electrical accessories or for necessary wiring changes. (00211c)

NOTE:

Installing off-road or competition parts to enhance performance may void all or parts of your limited warranty. See the Harley-Davidson Motorcycle Limited Warranty in this owner's manual or an authorized Harley-Davidson dealer for details.

California and Select International Markets Evaporative Emission Controls: 2016 Models

All new 2016 Harley-Davidson motorcycles sold in the State of California and select international markets have an evaporative emission control system. This system is designed to meet CARB and local regulations in effect at the time of manufacture.

The system requires a small amount of maintenance. Periodically inspect system to verify that hoses are properly routed, not kinked or blocked and that all

fittings are secure. Periodically check mounting hardware for tightness.

EPA Noise Regulations in the United States

EPA noise regulations require that the following statements be included in the Owner's Manual.

EPA Regulations

TAMPERING WITH NOISE CONTROL SYSTEM PROHIBITED: Federal law prohibits the following acts or the causing thereof: (1) The removal or rendering inoperative by any person other than for purposes of maintenance, repair, or replacement of any device or element of design incorporated into any new vehicle for the purpose of noise control prior to its sale or delivery to the ultimate purchaser or while it is in use, or (2) the use of the vehicle after such device or element of design has been removed or rendered inoperative by any person.

AMONG THOSE ACTS PRESUMED TO CONSTITUTE TAMPERING ARE THE FOLLOWING:

1. Replacing the muffler(s) and/or the entire exhaust system with parts not certified to be noise legal for street use.
2. Removing or modifying the muffler internal baffles in any way.
3. Replacing the air intake/cleaner assembly with one not certified to be noise legal for street use.
4. Modifying the air intake/cleaner assembly in such a way as to make the vehicle no longer noise legal for street use.

Harley-Davidson recommends that any and all noise related maintenance be done by an authorized Harley-Davidson dealer using Genuine Harley-Davidson parts.

Warranty/Service Information

Any authorized Harley-Davidson dealer may provide warranty repair work on your motorcycle. The fact that an authorized Harley-Davidson dealership performs warranty repairs does not create an agency relationship between Harley-Davidson and the authorized dealership. If you have any questions regarding warranty obligations contact your authorized Harley-Davidson dealer.

For normal service work or warranty work under the above conditions, you may obtain the name and location of your nearest U.S. authorized Harley-Davidson dealer by calling 1-800-258-2464 (U.S. only). To find dealers worldwide, see www.harley-davidson.com.

Reporting Safety Defects in the United States

Safety defects must be reported to the National Highway Traffic Safety Administration (NHTSA) and Harley-Davidson.

NHTSA Statement

If you believe that your motorcycle has a defect which could cause a crash or could cause injury or death, you should immediately inform the National Highway Traffic Safety Administration (NHTSA) in addition to notifying Harley-Davidson.

If NHTSA receives similar complaints, it may open an investigation, and if it finds that a safety defect exists in a group of motorcycles, it may order a recall and remedy campaign. However, NHTSA cannot become involved in individual problems between you, your authorized Harley-Davidson dealer, or Harley-Davidson.

You can contact NHTSA through the following means. Additional information about motor vehicle safety is available through the website.

Telephone: Vehicle Safety Hotline (toll-free) at 1-888-327-4236 (TTY: 1-800-424-9153).

Website: www.safercar.gov

Address: Administrator, NHTSA, 400 Seventh Street SW, Washington, DC 20590

Required Documentation for Imported Motorcycles

If a Harley-Davidson motorcycle is imported into the United States, additional documentation is required for that motorcycle to be eligible for the United States Harley-Davidson Motorcycle Limited Warranty. An authorized Harley-Davidson dealer can provide a form explaining the requirements.

Owner Contact Information

If you move from your present address, sell your motorcycle, or purchase a pre-owned Harley-Davidson motorcycle, see an authorized Harley-Davidson dealer to update your owner contact information.

This will provide Harley-Davidson with an accurate registration (as required by law in some countries), and will allow Harley-Davidson to notify you in the event of a recall or product program.

The rights and benefits conferred upon you and the obligations of Harley-Davidson as set forth herein are separate and distinct from any rights and duties set forth in any service contract you may have purchased from a dealership and/or third-party insurance company. Harley-Davidson does not authorize any entity to expand Harley-Davidson's warranty obligations in connection with your motorcycle or this limited warranty.

When updating your contact information, your authorized Harley-Davidson dealer will need your Vehicle Identification Number (VIN), odometer mileage, and date of vehicle transfer (if applicable).

Questions and Concerns

If you have questions or concerns regarding the performance of your motorcycle or the application of the limited warranty described here, or are not satisfied with the service you are receiving from an authorized Harley-Davidson dealership, do the following:

1. Contact the selling and/or servicing dealership and speak to the sales and/or service manager.
2. If your concern cannot be addressed to your satisfaction by the dealership, contact the Harley-Davidson Customer Support Center by mailing your concern to the following address or calling the phone number below.

In the U.S., state warranty laws, often referred to as lemon laws, may provide you with certain rights not specifically mentioned here. To the extent allowed by your state, Harley-Davidson requests that you first send written notification of any defect or warranty non-conformity that you have experienced with your motorcycle to Harley-Davidson. Harley-Davidson appreciates the opportunity to investigate your concerns and restore your satisfaction in your motorcycle by making the necessary repairs consistent with the terms of Harley-Davidson's limited warranty. Harley-Davidson requests that you send your complaint to the Harley-Davidson Customer Support Center.

- Harley-Davidson Motor Company
- Attention: Harley-Davidson Customer Support Center
- P.O. Box 653
- Milwaukee, Wisconsin 53201
- 1-800-258-2464 (U.S. only)
- 1-414-343-4056

This warranty does not mean that each Harley-Davidson motorcycle is free from defects. Defects may be unintentionally introduced into motorcycles during the design and manufacturing processes and such defects could result in the need for repairs. For this reason, Harley-Davidson provides the Limited Warranty in order to remedy any such defects that result in a component malfunction or failure during the warranty period. The remedy under this written

warranty, and any implied warranty, is limited to repair, replacement or adjustment of the defective part. This exclusive remedy shall not be deemed to have failed its essential purpose so long as Harley-Davidson, through its authorized dealers, is willing and able to repair, replace or adjust defective parts in the prescribed manner. Harley-Davidson's liability, if any, shall in no event exceed the cost of correcting any defect as herein provided and upon expiration of this warranty, any such liability shall terminate.

Limited Motorcycle Warranty

2016 Harley-Davidson Motorcycle Limited Warranty

---

24 Months/Unlimited Miles

Harley-Davidson warrants for any new 2016 Harley-Davidson motorcycle that an authorized Harley-Davidson dealer will repair or replace without charge any parts found under normal use to be defective in factory materials or workmanship. Such repair or replacement of defective parts will be Harley-Davidson's sole obligation and your sole and exclusive remedy under this limited warranty. This limited warranty applies only for the duration identified below.

No person, including Harley-Davidson dealers, may modify, extend or waive any part of this warranty.

As a condition of this warranty, you are responsible for properly using, maintaining, and caring for your motorcycle as outlined in your Owner Manual. Harley-Davidson recommends that you maintain copies of all maintenance records and receipts.

THERE IS NO OTHER EXPRESS WARRANTY (OTHER THAN THE SEPARATE EMISSIONS, NOISE, AND RADIO LIMITED WARRANTIES) ON THE MOTORCYCLE. Any implied warranty of merchantability or fitness for particular purpose is limited to the duration of the express warranty, or to the duration set forth in your state's warranty statutes, whichever is shorter. Any implied warranty is not transferred to subsequent purchasers/buyers of the motorcycle.

The implied warranty of fitness for a particular purpose does not apply if your motorcycle is used for racing, even if the motorcycle is equipped for racing.

Some states do not allow limitations on how long an implied warranty lasts, so the above limitation may not apply to you.

TO THE FULLEST EXTENT ALLOWED BY LAW, NEITHER HARLEY-DAVIDSON NOR ITS AUTHORIZED DEALERS SHALL BE LIABLE FOR LOSS OF TIME, INCONVENIENCE, LOSS OF MOTORCYCLE USE, COMMERCIAL LOSS OR ANY OTHER INCIDENTAL OR CONSEQUENTIAL DAMAGES.

Harley-Davidson and your dealer are not responsible for any time or income that you lose, any inconvenience, the loss of your transportation or use of your motorcycle, the cost of a rental motorcycle, fuel, travel, meals, or lodging, or for any other incidental or consequential damages you may have.

Punitive, exemplary, or multiple damages may not be recovered unless applicable law prohibits their disclaimer. You may not bring any warranty-related claim as a class representative, a private attorney general, a member of a class of claimants or in any other representative capacity. Harley-Davidson shall not be liable for any damages caused by delay in delivery or furnishing of any products and/or services.

Some states do not allow the exclusion or limitation of incidental or consequential damages, so the above limitation or exclusion may not apply to you.

This warranty gives you specific legal rights, and you may also have other rights which vary from state to state.

The following terms and conditions apply to this limited warranty:

Duration

---

1. The duration of this limited warranty is twenty-four months, starting from the earlier of (a) the date of initial retail purchase and delivery of the motorcycle from an authorized Harley-Davidson dealer, or (b) the third anniversary of the last day of the model year of the motorcycle. Your authorized Harley-Davidson dealer will submit an electronic Sales and Warranty Registration form to initiate your limited warranty.

2. Any unexpired portion of this limited warranty will be transferred to subsequent owners, upon the resale of the motorcycle during the limited warranty period.

Owner's Obligations

To obtain warranty service, return your motorcycle at your expense within the limited warranty period to an authorized Harley-Davidson dealer. The authorized Harley-Davidson dealer should be able to provide warranty service during normal business hours, depending upon the workload of the authorized dealer's service department and the availability of necessary parts.

Exclusions

This limited warranty will not apply to any motorcycle.

1. Which has not been operated or maintained as specified in the owner's manual.
2. Which has been abused, neglected, misused, improperly stored, used "off the highway," or used for racing or competition of any kind.
3. Which is not manufactured to comply with the laws of the market in which it is registered.
4. Which has off-road or competition parts installed to enhance performance, a trailer hitch, or has other unapproved modifications (even if these modifications include genuine Harley-Davidson parts and accessories that are not approved for use on your motorcycle). These modifications may void all or parts of your new motorcycle limited warranty. See an authorized Harley-Davidson dealer for details.
5. Which has been subjected to an act of God, war, riot, insurrection, nuclear contamination, natural disasters, including, but not limited to, lightning, forest fires, dust storms, hail storms, ice storms, earthquakes, or floods, or other circumstances out of Harley-Davidson's control.
6. Which has been in an accident or collision or has been dropped or struck.

Other Limitations

This limited warranty does not cover:

1. Parts and labor for normal maintenance as recommended in the owner's manual, or the replacement of parts due to normal wear and tear including, but not limited to, the following: tires, lubrication, oil and filter change, fuel system cleaning, battery maintenance, engine tune-up, spark plugs, brake, clutch, chain/belt adjustment and chain replacement.
2. Cosmetic concerns that arise as a result of owner abuse, lack of proper maintenance or environmental conditions (except concerns that result from defects in factory materials or workmanship, which are covered by this limited warranty for the duration of the limited warranty period).
3. Any cosmetic condition existing at the time of retail delivery that has not been documented by the authorized Harley-Davidson selling dealer prior to retail delivery.
4. Defects or damage to the motorcycle caused by alterations outside of Harley-Davidson's factory specifications or caused by alterations or use of parts or accessories not approved for the make and model year of your motorcycle.
5. Damage caused by installation or use of non-Harley-Davidson components, even those installed by an authorized Harley-Davidson dealership, that cause a Harley-Davidson part to fail. Examples include, but are not limited to performance-enhancing powertrain components or software, exhaust systems, trailer hitches, non-approved tires, lowering kits, handlebars, and add-ons connected to the factory electrical system.

Important: Read Carefully

1. Authorized Harley-Davidson dealers are independently owned and operated and may sell non-Harley-Davidson products. Because of this, HARLEY-DAVIDSON IS NOT RESPONSIBLE FOR THE SAFETY, QUALITY, OR SUITABILITY OF ANY NON-HARLEY-DAVIDSON PART, ACCESSORY OR DESIGN MODIFICATION INCLUDING, BUT NOT LIMITED TO, LABOR WHICH MAY BE SOLD AND/OR INSTALLED BY AUTHORIZED HARLEY-DAVIDSON DEALERS.
2. This limited warranty is a contract between you and Harley-Davidson. It is separate and apart from any warranty you may receive or purchase from an authorized Harley-Davidson dealer. An authorized Harley-Davidson dealer is not authorized to alter, modify, expand, or in any way change the terms and conditions of this limited warranty.
3. Any warranty work or parts replacement authorized by Harley-Davidson will not preclude Harley-Davidson from later relying on any exclusion where applicable.
4. Harley-Davidson and its authorized dealers reserve the right to modify or service motorcycles designed and manufactured by Harley-Davidson at any time without incurring any additional obligation to make the same alteration or change to a motorcycle previously built and sold. Harley-Davidson reserves the right to provide post-warranty repairs, conduct repair campaigns, offer good-will or customer satisfaction repairs or extend the warranty coverage for certain motorcycles at its sole discretion. Said repairs or extensions of warranty coverage in no way obligates Harley-Davidson to provide similar accommodations to other owners of similar motorcycles. Sometimes Harley-Davidson may offer a special adjustment program to pay all or part of the cost of certain repairs beyond the terms of your limited warranty. Check with your authorized Harley-Davidson dealer to learn whether such programs are available to you. Your state may prohibit these types of offers, in which case, they may not be available to you.
5. The fact that a part is labeled or branded Harley-Davidson does not necessarily make it appropriate or warranted for the make and model of your motorcycle. The use of parts not designed and tested for your motorcycle may have negative consequences on the performance of your motorcycle and may create conditions not covered by this limited warranty.

Limited Motorcycle Warranty (Australia)

2016 Australia/New Zealand Harley-Davidson Motorcycle Manufacturer's Limited Warranty

24 Months/Unlimited Miles

This motorcycle limited warranty, referred to below as the "H-D Motorcycle Warranty" applies to all persons who purchase a new 2016 or prior-model Harley-Davidson motorcycle in Australia and New Zealand only after 1st January 2016.

Your Consumer Rights

The benefits given to you under this H-D Motorcycle Warranty are additional to, and do not detract from, other rights and remedies that you may have in respect of the motorcycle under Australian and New Zealand laws, including consumer protection laws.

In Australia, our goods come with guarantees that cannot be excluded under the Australian Consumer Law. You are entitled to a replacement or refund for a major failure and compensation for any other reasonably foreseeable loss or damage. You are also entitled to have the goods repaired or replaced if the

goods fail to be of acceptable quality and the failure does not amount to a major failure.

In New Zealand, our goods also come with guarantees that cannot be excluded under the New Zealand Consumer Guarantees Act.

Warranty

This H-D Motorcycle Warranty, is provided by **Harley-Davidson, Motor Company**, P.O. Box 653, Milwaukee, Wisconsin 53201, U.S.A, phone: +1 (414) 343-4056, ("Harley-Davidson").

Harley-Davidson warrants for any new 2016 Harley-Davidson motorcycle that an authorised Harley-Davidson dealer will repair or replace without charge any parts found to be defective in factory materials or workmanship under normal use during the warranty period set out below.

Such repair or replacement of parts will be Harley-Davidson's sole obligation and your sole remedy under this H-D Motorcycle Warranty, however you may have other rights under Australian and New Zealand laws, as described above.

Note: Goods presented for repair may be replaced by refurbished goods of the same type rather than being repaired. Refurbished parts may be used to repair goods.

The following terms and conditions apply to this H-D Motorcycle Warranty:

Warranty Period

The duration of this H-D Motorcycle Warranty is twenty-four months, starting from the earlier of:

(a) the date of delivery by an authorised Harley-Davidson dealer to the first retail purchaser; or

(b) the third anniversary of the last day of the model year of the motorcycle (if not sold to a retail purchaser before that date).

Your authorised Harley-Davidson dealer will submit an electronic Sales and Warranty Registration form to initiate your H-D Motorcycle Warranty.

Note: If the motorcycle was used as a demonstrator or company motorcycle, then the warranty period may have started and/or expired prior to the initial retail sale. See an authorised Harley-Davidson dealer for details.

Any unexpired portion of this H-D Motorcycle Warranty will be transferred to subsequent owners, upon the resale of the motorcycle during the warranty period. See the OWNER CONTACT INFORMATION section of the Owner's Manual for information regarding notification of ownership changes.

Obtaining Warranty Service

To obtain warranty service, return your motorcycle at your expense within the warranty period to an authorised dealer. Harley-Davidson's network of authorised dealers is large, and continues to expand. To find current contact information for your nearest authorised dealer, visit our website at www.h-d.com.au.

The authorised Harley-Davidson dealer should be able to provide warranty service during normal business hours and as soon as possible, depending upon the workload of the authorised dealer's service department and the availability of necessary parts

You are responsible for collecting the motorcycle from the authorized dealer once the warranty service has been completed, at your expense.

Exclusions

This H-D Motorcycle Warranty will not apply to any motorcycle (or part or accessory):

1. Which has not been operated or maintained as specified in the Owner's Manual.
2. Which has been abused, neglected, misused, improperly stored, used "off the highway," or used for racing or competition of any kind.
3. Which was not originally manufactured for use or sold in Australia and New Zealand and/or does not comply with Australian and New Zealand homologation requirements.
4. Which has off-road or competition parts installed to enhance performance, or has unapproved modifications. These modifications may void all or part of your new H-D Motorcycle Warranty. See an authorised Harley-Davidson dealer for details.
5. Where damage is caused by, or Harley-Davidson is unable to honour this H-D Motorcycle Warranty due to, acts of God, war, riot, insurrection, natural disasters, including, but not limited to, nuclear contamination, lightning, forest fires, dust storms, hail storms, ice storms, earthquakes, floods, or other circumstances out of Harley-Davidson's control.
6. Which has been in an accident, collision, dropped or struck.

Note: Even though this H-D Motorcycle Warranty does not apply in the circumstances set out above, you may still have rights under Australian and New Zealand laws, including the Australian Consumer Law in such circumstances.

Other Limitations

This H-D Motorcycle Warranty does not cover:

1. Parts and accessories not manufactured by Harley-Davidson, or any damage caused to the motorcycle by the installation of such parts and accessories, even if such parts and accessories are installed on the motorcycle at the date of initial retail purchase. A separate third party warranty may apply to such parts and accessories. See an authorised Harley-Davidson dealer for details.
2. Parts and labour for normal maintenance as recommended in the Owner's Manual, or the replacement of parts due to normal wear and tear including, but not limited to, the following: tyres, lubrication, oil and filter change, fuel system cleaning, battery maintenance, engine tune-up, spark plugs, brake, clutch, chain/belt adjustment and chain replacement.
3. Cosmetic or other concerns that arise as a result of owner abuse, lack of proper maintenance or environmental conditions (except concerns that result from defects in factory materials or workmanship, which are covered by this H-D Motorcycle Warranty for the duration of the warranty period).
4. Any cosmetic condition existing at the time of retail delivery that has not been documented by the authorised Harley-Davidson selling dealer prior to retail delivery.
5. Defects or damage to the motorcycle caused by alterations outside of Harley-Davidson's factory specifications, including the installation of competition or closed course parts and accessories and the addition of loads and stresses to the motorcycle above those recommended by Harley-Davidson.
6. Damage caused by installation or use of non-Harley-Davidson components, even those installed by an authorised dealership, that cause a Harley-Davidson part to fail. Examples include, but are not limited to performance-enhancing powertrain components or software, exhaust systems, non-approved tyres, lowering kits, handlebars, add-ons connected to the factory electrical system, tow bars, etc.

Note: Even though this H-D Motorcycle Warranty does not cover the circumstances set out above, you may still have rights under Australian and New Zealand laws, including the Australian Consumer Law.

Important: Read Carefully

1. Authorised Harley-Davidson dealers are independently owned and operated and may sell non-Harley-Davidson products. Because of this, HARLEY-DAVIDSON IS NOT RESPONSIBLE FOR THE SAFETY, QUALITY, OR SUITABILITY OF ANY NON-HARLEY-DAVIDSON PART,

ACCESSORY OR DESIGN MODIFICATION WHICH MAY BE SOLD AND/OR INSTALLED BY AUTHORISED HARLEY-DAVIDSON DEALERS OR LABOUR CARRIED OUT BY DEALERS.

2. This H-D Motorcycle Warranty is a contract between you and Harley-Davidson. It is separate and apart from any warranty you may receive or purchase from an authorised Harley-Davidson dealer. An authorised Harley-Davidson dealer is not authorised to alter, modify, or in any way change the terms and conditions of this H-D Motorcycle Warranty.

Any warranty work or parts replacement authorised by Harley-Davidson will not preclude Harley-Davidson from later relying on any exclusion where Harley-Davidson later becomes aware that an exclusion applied or the warranty claim did not otherwise comply with the terms of this H-D Motorcycle Warranty.

Limited Noise Warranty

2016 Harley-Davidson Motorcycle Noise Control System Limited Warranty

---

The following limited warranty applies to the noise control system, is in addition to the MOTORCYCLE LIMITED WARRANTY and EMISSION CONTROL SYSTEM LIMITED WARRANTY, and applies only to Harley-Davidson motorcycles sold in the U.S.

Harley-Davidson warrants to the first owner and each subsequent owner that this motorcycle is designed and built so as to conform at the time of sale with applicable regulations of the U.S. Environmental Protection Agency (as tested following F-76 Drive-By test procedure) and that it is free from defects in factory materials and workmanship which can cause this motorcycle not to meet U.S. Environmental Protection Agency Standards within one (1) year from initial retail purchase and delivery from an authorized Harley-Davidson dealer or one (1) year from the [second] anniversary of the last day of the model year of the motorcycle, or 3,730 miles 6,000 kilometers whichever occurs first. Any unexpired portion of this limited warranty will be transferred to subsequent owners, upon the resale of the motorcycle during the limited warranty period. If the motorcycle was used as a demonstrator or company motorcycle, then the limited warranty period may have started and/or expired prior to the initial retail sale. See an authorized Harley-Davidson dealer for details.

THERE IS NO OTHER EXPRESS WARRANTY (OTHER THAN THE SEPARATE MOTORCYCLE AND EMISSIONS LIMITED WARRANTIES) ON THE MOTORCYCLE. ANY IMPLIED WARRANTY OF MERCHANTABILITY OR FITNESS FOR PARTICULAR PURPOSE IS LIMITED TO THE DURATION OF THIS LIMITED WARRANTY.

Some states do not allow limitations on how long an implied warranty lasts, so the above limitation may not apply to you.

The limited warranty period shall begin on the date the motorcycle is delivered to the first retail purchaser or, if the motorcycle is placed in service as a demonstrator or company motorcycle prior to sale at retail, on the date it is first placed in service.

THE FOLLOWING ITEMS ARE NOT COVERED BY THE NOISE CONTROL SYSTEM LIMITED WARRANTY

1. Failures which arise as a result of misuse, alteration, or non-performance of maintenance as specified in the Owner's Manual.

2. Replacing, removing, or modifying any portion of the NOISE CONTROL SYSTEM (consisting of the exhaust system and air intake/cleaner assembly) with parts not certified to be noise legal for street use.

3. Any motorcycle on which the odometer mileage has been changed so that the mileage cannot be determined.

4. TO THE FULLEST EXTENT ALLOWED BY LAW, NEITHER HARLEY-DAVIDSON NOR ITS AUTHORIZED DEALERS SHALL BE LIABLE FOR LOSS OF TIME, INCONVENIENCE, LOSS OF MOTORCYCLE USE, COMMERCIAL LOSS OR OTHER INCIDENTAL OR CONSEQUENTIAL DAMAGES.

Some states do not allow the exclusion or limitation of incidental or consequential damages, so the above limitation or exclusion may not apply to you.

Other Rights

This limited warranty gives you specific legal rights, and you may have other rights which vary from state to state.

Recommendations for Required Maintenance

It is recommended that any noise system maintenance be performed by an authorized Harley-Davidson dealer using genuine Harley-Davidson replacement parts. The maintenance, replacement or repair of the noise control system may be performed by any other qualified service outlet or individual. Non-genuine Harley-Davidson parts may be used only if such parts are certified to comply with U.S. Environmental Protection Agency Standards.

Limited Emission Warranty

2016 Harley-Davidson Emission Control System Limited Warranty

The following limited warranty applies to the emission control system, is in addition to the MOTORCYCLE LIMITED WARRANTY and NOISE CONTROL SYSTEM LIMITED WARRANTY, and applies only to Harley-Davidson motorcycles certified for sale, registered, and normally operated in the U.S. Refer to the CALIFORNIA EMISSIONS CONTROL WARRANTY STATEMENT for additional warranty provisions applicable to California motorcycles.

Harley-Davidson Motor Company warrants to the first owner and each subsequent owner that this vehicle is designed, built, and equipped so as to conform at the time of sale with applicable regulations under section 7521 of Title 42 of the United States Code, and that it is free from defects in materials and workmanship which would cause this motorcycle to fail to conform with applicable regulations for five (5) years from the initial retail purchase and delivery from an authorized Harley-Davidson dealer (or five (5) years from the date the motorcycle is first placed in service, if it is first placed in service as a "demonstrator" or "company" motorcycle prior to delivery), or 18,641 miles 30,000 kilometers , whichever occurs first. Any unexpired portion of this limited warranty will be transferred to subsequent owners, upon the resale of the motorcycle during the warranty period.

THERE IS NO OTHER EXPRESS WARRANTY (OTHER THAN THE SEPARATE MOTORCYCLE AND NOISE LIMITED WARRANTIES) ON THE MOTORCYCLE. ANY IMPLIED WARRANTY OF MERCHANTABILITY OR FITNESS FOR PARTICULAR PURPOSE IS LIMITED TO THE DURATION OF THIS WARRANTY.

Some states do not allow limitations on how long an implied warranty lasts, so the above limitation may not apply to you.

The limited warranty period shall begin on the date the motorcycle is delivered to the first retail purchaser or, if the motorcycle is placed in service as a demonstrator or company motorcycle prior to sale at retail, on the date it is first placed in service.

THE FOLLOWING ITEMS ARE NOT COVERED BY THE EMISSION CONTROL SYSTEM LIMITED WARRANTY

1. Failures which arise as a result of misuse, tampering, alterations, accident, acts of nature, or improper or inadequate maintenance as specified in the Owner's Manual.
2. Required maintenance services (as specified in the Owner's Manual) and the replacement of parts (such as spark plugs, fuel and oil filters, etc.) used in required maintenance.
3. Any motorcycle on which the odometer mileage has been changed so that the mileage cannot be determined.
4. TO THE FULLEST EXTENT ALLOWED BY LAW, NEITHER HARLEY-DAVIDSON NOR ITS AUTHORIZED DEALERS SHALL BE LIABLE FOR LOSS OF TIME, INCONVENIENCE, TOWING OF THE VEHICLE, LOSS OF MOTORCYCLE USE, COMMERCIAL LOSS OR OTHER INCIDENTAL OR CONSEQUENTIAL DAMAGES.

Some states do not allow the exclusion or limitation of incidental or consequential damages, so the above limitation or exclusion may not apply to you.

Items Covered by this Emission Warranty

The emission control system warranty may cover the following parts if the defect is deemed to be emissions-related:

- Air cleaner assembly
- Cam shaft
- Spark plug
- Ignition coil
- Ignition wires
- Vapor valve
- Catalytic converter
- Crankcase breather
- MAP sensor
- TMAP sensor
- Intake air temperature sensor
- Throttle position sensor
- Fuel injectors
- Induction module or throttle body
- Engine temperature sensor
- Electronic control unit
- Regulator/fuel pump (for leaks and/or high and low-pressure failures)
- Fuel filter
- Oxygen sensors

Fuel Tank (non-cosmetic failures only)

- Leaks
- Fuel vapor separator
- Fuel cap

If used on the above: hoses, clamps, fittings, tubing, sealing gaskets and mounting hardware.

Detailed instructions for proper maintenance and use of this motorcycle, including the time and/or mileage intervals at which such maintenance is to be performed, may be found in this Owner's Manual under Service Records.

Other Rights

This limited warranty gives you specific legal rights, and you may have other rights which vary from state to state.

Recommendations for Required Maintenance

It is recommended that any emission system maintenance be performed by an authorized Harley-Davidson dealer using genuine Harley-Davidson replacement parts. However the maintenance, replacement or repair of the emissions control system may be performed by any other qualified service outlet or individual. Non-genuine Harley-Davidson parts may be used only if such parts are certified to comply with U.S. Environmental Protection Agency Standards.

California Emissions Control Warranty

California Emissions Control Warranty Statement

Your Warranty Rights and Obligations

The California Air Resources Board and Harley-Davidson Motor Company are pleased to explain the emission control system warranty on your 2016 model year motorcycle. In California, new motor vehicles must be designed, built and equipped to meet the State's stringent anti-smog standards. Harley-Davidson Motor Company must warrant the emission control system on your motorcycle for the periods of time listed below provided there has been no abuse, unapproved modification, neglect or improper maintenance of your motorcycle.

Your emission control system may include parts such as the carburetor or fuel-injection system, the ignition system, catalytic converter, and engine computer. Also included may be hoses, connectors and other emission-related assemblies.

Where a warrantable condition exists, within the warranty period noted below, your authorized Harley-Davidson dealer will repair your motorcycle at no cost to you including diagnosis, parts and labor.

Manufacturer's Warranty Coverage

For a period of use of five years or 18,641 miles 30,000 kilometers , whichever first occurs, beginning on the date the motorcycle is delivered to the ultimate purchaser or, if the motorcycle is placed in service as a demonstrator or company motorcycle prior to sale at retail, the date it is first placed in service.

If any emission related part on your motorcycle is defective, the part will be repaired or replaced by Harley-Davidson Motor Company. This is your emission control system DEFECTS WARRANTY.

Owner's Warranty Responsibilities

As the motorcycle owner, you are responsible for the performance of the required maintenance listed in your Owner's Manual. Harley-Davidson recommends that you retain all receipts covering maintenance on your motorcycle, but Harley-Davidson cannot deny emissions warranty coverage solely for the lack of receipts or for your failure to ensure the performance of all scheduled maintenance.

You are responsible for presenting your motorcycle to an authorized Harley-Davidson dealer as soon as a problem exists. The warranty repairs should be completed in a reasonable amount of time, not to exceed 30 days.

As the motorcycle owner, you should also be aware that Harley-Davidson may deny you warranty coverage if your motorcycle or a part has failed due to abuse, neglect, improper maintenance or unapproved modifications.

If you have any questions regarding your warranty rights and responsibilities, you should contact Harley-Davidson Customer Service Department at 1-800-258-2464 (U.S. only) or 1-414-343-4056, or the California Air Resources Board at 9528 Telstar Ave., El Monte, California 91731.

Additional Warranty Terms

The warranty period starts the date the motorcycle is delivered to the ultimate purchaser or, if the motorcycle is placed in service as a demonstrator or company motorcycle prior to sale at retail, the date it is first placed in service.

The emission control system of each new Harley-Davidson motorcycle was designed, built and tested using only Genuine Harley-Davidson parts and with these parts the motorcycle is certified as being in conformity with California emission control regulations.

We recommend that you take your motorcycle to an authorized Harley-Davidson dealer for repairs under this warranty. The dealer has factory-trained mechanics and genuine Harley-Davidson parts. However, in the case of an "emergency" (as defined below), you could have repairs performed at any available service establishment or by the owner, using any replacement part. An authorized Harley-Davidson dealer not being reasonably available, or a part not being available within a reasonable time period (not to exceed 30 days from the time the motorcycle is initially presented to a Harley-Davidson dealer for

repair) constitutes an emergency. Harley-Davidson will reimburse the owner for such repairs, including diagnosis, only if it is established that the repairs are covered under this emission warranty. Harley-Davidson's parts reimbursement, however, will not exceed our suggested retail price for all warranted parts replaced and our labor reimbursement will be limited to our recommended time allowances for emission system repairs at the geographically appropriate hourly labor rate.

To obtain reimbursement from Harley-Davidson for such emergency repairs, you must keep all failed parts and original receipts, so you can present them to an authorized Harley-Davidson dealer for inspection. Harley-Davidson recommends that you bring your motorcycle to an authorized dealer for inspection to ensure that the emergency repairs were done properly.

Remember: Use of non-Harley-Davidson replacement parts may impair the effectiveness of the emission control system or otherwise damage your motorcycle. If other than genuine Harley-Davidson parts are used for maintenance, replacement or repair of components affecting emission control, you should obtain written assurances that such non-Harley-Davidson parts are warranted by their manufacturer to be equal in quality to Genuine Harley-Davidson parts in both performance and durability. The use of non-Harley-Davidson replacement parts does not invalidate the existing warranty, if any, on other Harley-Davidson components unless the non-Harley-Davidson parts cause damage to warranted parts or result in the creation of an emissions non-compliant motorcycle. However, HARLEY-DAVIDSON ASSUMES NO LIABILITY UNDER THIS WARRANTY WITH RESPECT TO ANY PARTS WHICH ARE NOT GENUINE HARLEY-DAVIDSON PARTS, unless Harley-Davidson parts cause damage to non-genuine Harley-Davidson parts.

What Is Covered by this Emission Warranty

The emission control system warranty covers the following "warranted parts" only:

- Air cleaner assembly
- Cam shaft
- Spark plug
- Ignition coil
- Ignition wires
- Vapor valve
- Catalytic converter
- Crankcase breather
- MAP sensor
- TMAP sensor
- Intake air temperature sensor
- Throttle position sensor
- Fuel injectors
- Induction module or throttle body
- Engine temperature sensor
- Electronic control unit
- Regulator/fuel pump (for leaks and/or high and low pressure failures)
- Fuel filter
- Oxygen sensors
- Carbon canister
- Purge control valve

Fuel Tank (non-cosmetic failures only)

- Leaks
- Fuel vapor separator
- Fuel cap

If used on the above: hoses, clamps, fittings, tubing, sealing gaskets and mounting hardware.

What Is Not Covered by this Emission Warranty

The emission control system warranty does not cover:

Malfunctions in any "warranted parts" caused by any of the following: abuse, misuse, unapproved modification or alteration, tampering, disconnection, or improper or inadequate maintenance. The warranty also does not cover replacement of listed parts in the event that the vehicle has been rendered emissions non-compliant in the state of California through actions noted above.

Damage resulting from accident, acts of nature or other events beyond the control of Harley-Davidson.

The repair or replacement of "warranted parts" which are scheduled for replacement prior to 18,641 mi 30,000 km , once these parts have been replaced at the first replacement interval as part of required maintenance services.

Repairs and services performed by anyone other than an authorized Harley-Davidson Dealer (except in case of emergency as defined above).

Loss of time, inconvenience, loss of use of the motorcycle, towing of the vehicle, or commercial loss and/or consequential damages.

Repairs on any motorcycle of which odometer mileage has been changed so that mileage cannot be readily determined.

Maintenance Scheduling

Service Records

Regular Service Intervals

⚠WARNING

Perform the service and maintenance operations as indicated in the regular service interval table. Lack of regular maintenance at the recommended intervals can affect the safe operation of your motorcycle, which could result in death or serious injury. (00010a)

⚠WARNING

If you operate your motorcycle under adverse conditions (severe cold, extreme heat, very dusty environment, very bad roads, through standing water, etc.), you should perform the regular maintenance intervals more frequently to ensure the safe operation of your motorcycle. Failure to maintain your motorcycle could result in death or serious injury. (00094a)

Regular maintenance must be performed at specified intervals to help keep your new Harley-Davidson motorcycle operating at peak performance and keep your new motorcycle limited warranty in force. Your authorized Harley-Davidson dealer knows best how to service your motorcycle with factory approved methods and equipment assuring you of thorough and competent workmanship.

Some maintenance items are scheduled at least once per year, even if the next mileage interval has not been reached. In severe riding conditions, some maintenance items need to be performed more frequently. Refer to Regular Service Intervals: 2016 Sportster Models.

NOTES:

- *The use of parts and service procedures other than Harley-Davidson approved parts and service procedures may void the limited warranty. Any alterations to the emission system components, such as the intake and exhaust system, may be in violation of motor vehicle laws.*
- *Some countries, such as Brazil, may require all regular maintenance to be performed by an authorized Harley-Davidson dealer for your limited warranty to remain in effect. Check with your authorized Harley-Davidson dealer.*
- *Some countries, such as Brazil, require additional annual (or semi-annual) regular maintenance steps to keep your limited warranty in effect and/or comply with vehicle regulations. Check with your authorized Harley-Davidson dealer and the motorcycle regulations in your country for local requirements.*
- *After completing the final service interval, repeat the service schedule starting at the 5000 mi 8000 km interval. Refer to Regular Service Intervals: 2016 Sportster Models.*
- *Whenever a vehicle is in for maintenance, always check for and complete open recalls and product programs.*
- *Whenever a vehicle is in for maintenance, always verify that the latest calibration is installed.*

Regular Service Intervals: 2016 Sportster Models

ITEM SERVICED	1000 mi 1600 km	5000 mi 8000 km	10000 mi 16000 km	15000 mi 24000 km	20000 mi 32000 km	25000 mi 40000 km	30000 mi 48000 km	35000 mi 56000 km	40000 mi 64000 km	45000 mi 72000 km	50000 mi 80000 km	NOTES
Check operation of electrical equipment and switches	X	X	X	X	X	X	X	X	X	X	X	
Check front tire pressure, inspect tread	X	X	X	X	X	X	X	X	X	X	X	1
Check front wheel spoke torque (if equipped)	X	X			X			X			X	2, 3, 4
Inspect front brake fluid sight glass	X	X	X	X	X	X	X	X	X	X	X	5
Check front brake reservoir cover screw torque	X		X		X		X		X		X	1, 2, 6
Adjust steering head bearings	X		X		X		X		X		X	2
Lubricate steering head bearings							X					2, 7
Check, adjust and lubricate throttle controls	X	X	X	X	X	X	X	X	X	X	X	2
Check upper and lower switch housing screw torque	X		X		X		X		X		X	1, 2, 6
Inspect air cleaner, service as required		X	X	X	X	X	X	X	X	X	X	4
Replace engine oil and filter	X	X	X	X	X	X	X	X	X	X	X	1, 4
Check primary chain adjustment	X	X	X	X	X	X	X	X	X	X	X	
Replace transmission lubricant	X		X		X		X		X		X	4
Inspect oil lines and brake system for leaks, contact or abrasion	X	X	X	X	X	X	X	X	X	X	X	1, 2
Inspect fuel lines and fittings for leaks, contact or abrasion	X	X	X	X	X	X	X	X	X	X	X	1, 2
Check upper front stabilizer link to engine bracket mounting screw torque	X		X		X		X		X		X	1, 2, 6
Check front isolator mounting bolt and nut torque	X		X		X		X		X		X	1, 2, 6
Inspect rear brake fluid sight glass	X	X	X	X	X	X	X	X	X	X	X	5
Check rear brake reservoir cover screw torque	X		X		X		X		X		X	1, 2, 6
Inspect brake pads and discs for wear	X	X	X	X	X	X	X	X	X	X	X	
Check front axle nut torque	X		X		X		X		X		X	1, 2, 6

Check front axle nut torque	X		X		X		X		X		X	1, 2, 6
Check brake banjo bolt torque	X		X		X		X		X		X	1, 2, 6
Inspect and lubricate jiffy stand	X	X	X	X	X	X	X	X	X	X	X	2, 4
Check clutch adjustment	X	X	X	X	X	X	X	X	X	X	X	2, 4
Check, adjust and lubricate brake and clutch controls	X	X	X	X	X	X	X	X	X	X	X	
Check rear wheel spoke torque (if equipped)	X	X			X			X			X	2, 3, 4
Check rear tire pressure, inspect tread	X	X	X	X	X	X	X	X	X	X	X	1
Inspect drive belt and sprockets, adjust belt	X	X	X	X	X	X	X	X	X	X	X	2
Check rear axle nut torque	X		X		X		X		X		X	1, 2, 6
Inspect exhaust system for leaks, cracks and loose or missing fasteners or exhaust shields	X	X	X	X	X	X	X	X	X	X	X	1, 4
Check battery, terminal torque and clean connections annually.												1
Replace spark plugs every two years or every 30,000 mi (48,000 km), whichever comes first.												
Rebuild front forks											X	2, 8
Replace fuel filter element every 100,000 mi 160,000 km .												2, 4
Road test to verify component and system functions	X	X	X	X	X	X	X	X	X	X	X	
NOTES:	1. Perform annually or at specified intervals, whichever comes first. 2. Should be performed by an authorized Harley-Davidson dealer, unless you have the proper tools, service data and are mechanically qualified. 3. Perform spoke tension check at 1000 mi 1600 km , 5000 mi 8000 km , 20,000 mi 32,000 km services and every 15,000 mi 24,000 km interval thereafter. Not all vehicles have spoked wheels. Consult appropriate topic in service manual. 4. Perform maintenance more frequently in severe riding conditions (such as extreme temperatures, dusty environments, mountainous or rough roads, long storage conditions, short runs, heavy stop/go traffic or poor fuel quality). 5. Change DOT 4 brake fluid and flush system every two years. 6. For torque instructions, see Shop Practices in the service manual. 7. Disassemble, lubricate and inspect every 30,000 mi 48,000 km . 8. Disassemble, inspect, rebuild forks and replace fork oil every 50,000 mi 80,000 km .											

Maintenance Records

Maintain a record of all service. Refer to Owner's Maintenance Records.

Owner's Maintenance Records

SERVICE MILE INTERVAL	DATE	DEALER NUMBER	TECHNICIAN NAME	TECHNICIAN SIGNATURE
1,000 mi 1,600 km				
5,000 mi 8,000 km				
10,000 mi 16,000 km				
15,000 mi 24,000 km				
20,000 mi 32,000 km				
25,000 mi 40,000 km				
30,000 mi 48,000 km				
35,000 mi 56,000 km				
40,000 mi 64,000 km				
45,000 mi 72,000 km				
50,000 mi 80,000 km				

Service Literature

Visit any Harley-Davidson dealer to purchase a service or parts manual for your motorcycle. Factory authorized manuals are the most complete and detailed source of information outside of your Harley-Davidson dealer. Refer to Service Literature: 2016 Sportster Models.

Service Literature: 2016 Sportster Models

DOCUMENT	PART NUMBER
Sportster Models Service Manual	99484-16
Sportster Models Electrical Diagnostic Manual	99495-16
Sportster Models Parts Catalog	99451-16
Publication numbers listed are English language manuals. Other languages are available from a Harley-Davidson dealer.	

H-D U.S.A., LLC Trademark Information

Bar & Shield, Boom!, Cross Bones, Cruise Drive, CVO, Digital Tech, Digital Technician, Digital Technician II, Dyna, Electra Glide, Evolution, Fat Bob, Fat Boy, Forty-Eight, Glaze, Gloss, H-D, H-Dnet.com, Harley, Harley-Davidson, HD, Heritage Softail, Iron 883, Low Rider, Night Rod, Nightster, Night Train,

Profile, Reflex, Revolution, Road Glide, Road King, Road Tech, Rocker, Screamin' Eagle, Seventy-Two, Softail, Sportster, Street Glide, Street Rod, Sun Ray, Sunwash, Super Glide, SuperLow, Supersmart, Switchback, SYN3, TechLink, TechLink II, Tour-Pak, Tri Glide, Twin Cam 88, Twin Cam 88B, Twin Cam 96, Twin Cam 96B, Twin Cam 103, Twin Cam 103B, Twin Cam 110, Twin Cam 110B, Twin-Cooled, Ultra Classic, V-Rod, VRSC and Harley-Davidson Genuine Motor Parts and Genuine Motor Accessories are among the trademarks of H-D U.S.A., LLC.

Product Registered Marks

Apple, Alcantara S.p.A., Allen, Amp Multilock, Bluetooth, Brembo, City Navigator, Delphi, Deutsch, Dunlop, Dynojet, Fluke, G.E. Versilube, Garmin, Gunk, Hydroseal, Hylomar, iPhone, iPod, Kevlar, Lexan, Loctite, Lubriplate, Keps, K&N, Magnaflux, Marson Thread-Setter Tool Kit, MAXI fuse, Molex, Michelin, MPZ, Mulitilock, nano, NGK, Novus, Packard, Pirelli, Permatex, Philips, PJ1, Pozidriv, Road Tech, Robinair, S100, Sems, SiriusXM, Snap-on, Teflon, Threadlocker, Torca, Torco, TORX, Tufoil, Tyco, Ultratorch, Velcro, X-Acto, XM Satellite Radio, and zumo are among the trademarks of their respective owners.