# Safety First

## Safe Operating Rules: Dyna Models

Before operating your new motorcycle it is your responsibility to read and follow the operating and maintenance instructions in this manual, and follow these basic rules for your personal safety.

- Know and respect the rules of the road (see RULES OF THE ROAD section). Carefully read and observe the rules contained in the RIDING TIPS booklet accompanying this Owner's Manual. Read and familiarize yourself with the contents of the MOTORCYCLE HANDBOOK for your state.
- Before starting engine, check for proper operation of brake, clutch, shifter, throttle controls, correct fuel and oil supply.

**⚠WARNING**

**Do not use aftermarket parts and custom made front forks which can adversely affect performance and handling. Removing or altering factory installed parts can adversely affect performance and could result in death or serious injury. (00001a)**

- Use only Harley-Davidson approved parts and accessories. Use of certain other manufacturer's performance parts will void your new motorcycle warranty. See your Harley-Davidson dealer for details.

**⚠WARNING**

**Stop the engine when refueling or servicing the fuel system. Do not smoke or allow open flame or sparks near gasoline. Gasoline is extremely flammable and highly explosive, which could result in death or serious injury. (00002a)**

When refueling your motorcycle, the following rules should be observed.

- Refuel in a well ventilated area with the engine turned off.
- Remove fuel filler cap slowly.
- Do not smoke or allow open flames or sparks when refueling or servicing the fuel system.
- Always close the fuel supply valve when the engine is not running. This prevents flooding of the carburetor and the surrounding area with gasoline.
- Do not fill fuel tank above the bottom of the filler neck insert.
- Leave air space to allow for fuel expansion.

**⚠WARNING**

**Do not store motorcycle with gasoline in tank within the home or garage where open flames, pilot lights, sparks or**

**electric motors are present. Gasoline is extremely flammable and highly explosive, which could result in death or serious injury. (00003a)**

**⚠WARNING**

**Engine exhaust from this product contains chemicals known to the State of California to cause cancer and birth defects or other reproductive harm. (00004e)**

**⚠WARNING**

**Wheel weights on wheels without spokes contain lead and lead compounds, chemicals known to the State of California to cause cancer and birth defects or other reproductive harm. (00356b)**

**⚠WARNING**

**Do not run motorcycle in a closed garage or confined area. Inhaling motorcycle exhaust, which contains poisonous carbon monoxide gas, could result in death or serious injury. (00005a)**

**⚠WARNING**

**The jiffy stand locks when placed in the full forward (down) position with vehicle weight on it. If the jiffy stand is not in the full forward (down) position with vehicle weight on it, the vehicle can fall over which could result in death or serious injury. (00006a)**

**⚠WARNING**

**Be sure jiffy stand is fully retracted before riding. If jiffy stand is not fully retracted, it can contact the road surface causing a loss of vehicle control, which could result in death or serious injury. (00007a)**

- A new motorcycle must be operated according to the special break-in procedure. See Break-in Riding Rules: Six Speed.
- Operate motorcycle only at moderate speed and out of traffic until you have become thoroughly familiar with its operation and handling characteristics under all conditions.

*NOTE:*

*We recommend that you obtain information and formal training in the correct motorcycle riding technique. The Motorcycle Safety Foundation® offers beginning and advanced rider safety courses. Call (949)727-3227 for information.*

**⚠WARNING**

**Travel at speeds appropriate for road and conditions and never travel faster than posted speed limit. Excessive speed can cause loss of vehicle control, which could result in death or serious injury. (00008a)**

- Do not exceed the legal speed limit or drive too fast for existing conditions. Always reduce speed when poor driving conditions exist. High speed increases the influence of any other condition affecting stability and increases the possibility of loss of control.
- Pay strict attention to road surfaces and wind conditions. Any two wheeled vehicle may be subject to upsetting forces such as wind blasts from passing trucks, holes in the pavement, rough road surfaces, rider control error, etc. These forces may influence the handling characteristics of your motorcycle. If this happens, reduce speed and guide the motorcycle with a relaxed grip to a controlled condition. Do not brake abruptly or force the handlebar. This may aggravate an unstable condition.
- Keep cargo weight concentrated close to the motorcycle and as low as possible to minimize the change in the motorcycle's center of gravity. Distribute weight evenly on both sides of the vehicle and do not load bulky items too far behind the rider or add weight to the handlebars or front forks. Do not exceed maximum specified load in each saddlebag.

*NOTE:*

*New riders should gain experience under various conditions while driving at moderate speeds.*

- Operate your motorcycle defensively. Remember, a motorcycle does not afford the same protection as an automobile in an accident. One of the most common accident situations occurs when the driver of the other vehicle fails to see or recognize a motorcycle and turns left into the on-coming motorcyclist. Operate only with headlamp on.
- Wear an approved helmet, clothing, and foot gear suited for motorcycle riding. Bright or light colors are best for greater visibility in traffic, especially at night. Avoid loose, flowing garments and scarves.

**⚠WARNING**

**Avoid contact with exhaust system and wear protective clothing that completely covers legs while riding. Exhaust pipes and mufflers get very hot when engine is running and remain too hot to touch, even after engine is turned off. Failure to wear protective clothing could result in burns or other serious injury. (00009a)**

- When carrying passengers, it is your responsibility to instruct them on proper riding procedures. (See Riding Tips for Motorcyclist included in your Harley-Davidson Owner's Kit.)

- Do not allow other individuals, under any circumstances, to operate your motorcycle unless you know they are experienced, licensed riders and are thoroughly familiar with the operation of your particular motorcycle.

- Protect your motorcycle against theft. After parking your motorcycle, lock the steering head and remove ignition key from switch. Set security alarm if present.
- Safe motorcycle operation requires alert mental judgment combined with a defensive driving attitude. Do not allow fatigue, alcohol or drugs to endanger your safety or that of others.
- Vehicles equipped with a sound system should have the volume adjusted to a nondistracting

level before operating vehicle.

- Maintain your motorcycle in proper operating condition in accordance with Regular Service Intervals: 2006 Dyna Models. Particularly important to motorcycle stability is proper tire inflation pressure, tread condition, and proper adjustment of wheel bearings and steering head bearings.

**⚠WARNING**

**Do not operate vehicle with forks locked. Locking the forks restricts the vehicle's turning ability, which could result in death or serious injury. (00035a)**

**⚠WARNING**

**Perform the service and maintenance operations as indicated in the regular service interval table. Lack of regular maintenance at the recommended intervals can affect the safe operation of your motorcycle, which could result in death or serious injury. (00010a)**

**⚠WARNING**

**Do not operate motorcycle with loose, worn or damaged steering or suspension systems. Contact a Harley-Davidson dealer for repairs. Loose, worn or damaged steering or suspension components can adversely affect stability and handling, which could result in death or serious injury. (00011a)**

**⚠WARNING**

**Regularly inspect shock absorbers and front forks. Replace leaking, damaged or worn parts that can adversely affect stability and handling, which could result in death or serious injury. (00012a)**

**⚠WARNING**

**Use Harley-Davidson replacement fasteners. Aftermarket fasteners can adversely affect performance, which could result in death or serious injury. (00013a)**

- See Harley-Davidson service manual for proper torque values.
- Aftermarket fasteners may not have the specific property requirements to perform properly.

**⚠WARNING**

**Be sure tires are properly inflated, balanced and have adequate tread. Inspect your tires regularly and see a Harley-Davidson dealer for replacements. Riding with**

**excessively worn, unbalanced or under-inflated tires can adversely affect stability and handling, which could result in death or serious injury. (00014a)**

**⚠WARNING**

**Replace punctured or damaged tires. In some cases, small punctures in the tread area may be repaired from within the demounted tire by a Harley-Davidson dealer. Speed should NOT exceed 50 mph (80 km/h) for the first 24 hours after repair, and the repaired tire should NEVER be used over 80 mph (130 km/h). Failure to follow this warning could result in death or serious injury. (00015a)**

**⚠WARNING**

**Do not exceed the motorcycle's Gross Vehicle Weight Rating (GVWR) or Gross Axle Weight Rating (GAWR). Exceeding these weight ratings can affect stability and handling, which could result in death or serious injury. (00016e)**

- GVWR is the sum of the weight of the motorcycle, accessories, and the maximum weight of the rider, passenger and cargo that can be safely carried.
- The GVWR is shown on the information plate, located on the frame steering head.
- GAWR is the maximum amount of weight that can be safely carried on each axle. Refer to Weights: 2006 Dyna Models.

**⚠WARNING**

**Do not tow a disabled motorcycle. Towing can adversely affect stability and handling, which could result in death or serious injury. (00017a)**

**⚠WARNING**

**Do not pull a trailer with a motorcycle. Pulling a trailer can cause tire overload, reduced braking efficiency and adversely affect stability and handling, which could result in death or serious injury. (00018b)**

**⚠CAUTION**

**Direct contact of D.O.T. 4 brake fluid with eyes can cause irritation. Avoid eye contact. In case of eye contact flush with large amounts of water and get medical attention. Swallowing large amounts of D.O.T. 4 brake fluid can cause digestive discomfort. If swallowed, obtain medical attention. Use in well ventilated area. KEEP OUT OF REACH OF CHILDREN. (00240a)**

**⚠WARNING**

**Batteries, battery posts, terminals and related accessories contain lead and lead compounds, and other chemicals known to the State of California to cause cancer and birth defects or other reproductive harm. Wash hands after handling. (00019d)**

**⚠WARNING**

**Consult a Harley-Davidson dealer regarding any questions or problems that occur in the operation of your motorcycle. Failure to do so can aggravate an initial problem, cause costly repairs, cause an accident and could result in death or serious injury. (00020a)**

- Be sure all equipment required by federal, state and local law is installed and in good operating condition.

## Rules of the Road

- Keep to the right side of the road centerline when meeting other vehicles coming in the opposite direction. Ride to left of center of your lane to avoid oily pavement ahead.
- Always sound your horn, actuate your turn signals, and exercise caution when passing other vehicles going in the same direction. Never try to pass another vehicle going in the same direction at street intersections, on curves, or when going up or down a hill.
- At street intersections give the right-of-way to the vehicle on your right. Do not presume you have the right-of-way, as the other driver may not know it is your turn.
- Always signal when preparing to stop, turn or pass.
- All traffic signs, including those used for the control of traffic at intersections, should be obeyed promptly. SLOW DOWN signs near schools and CAUTION signs at railroad crossings should always be observed and your actions governed accordingly.
- When intending to turn to the left, signal at least 100 feet (30.5 meters) before reaching the turning point. Move over to the centerline of the street (unless local rules require otherwise), slow down, enter the intersection of the street and then turn carefully to the left.
- Never anticipate a traffic light. When a change is indicated from GO to STOP (or vice versa) in the traffic control systems at intersections, slow down and wait for the light to change. Never run through a yellow or red traffic light.
- While turning either right or left, watch for pedestrians, animals, as well as vehicles.
- Do not leave the curb or parking area without signaling. Be sure your way is clear to enter moving traffic. A moving line of traffic always has the right-of-way.
- Be sure your license plate is installed in the position specified by law and is clearly visible at all times. Keep the plate clean.
- Ride at a safe speed that is consistent with the type of highway you are on. Pay strict attention to whether the road is dry, oily, icy or wet.
- Watch for debris such as leaves or loose gravel.
- Weather and traffic conditions on the highway dictate adjusting your speed and driving habits accordingly.

## Accessories and Cargo

Harley-Davidson Motor Company cannot test and make specific recommendations concerning

every accessory or combination of accessories sold. Therefore, the rider must be responsible for safe operation of the motorcycle when installing accessories or carrying additional weight.

**⚠WARNING**

**See the Accessory and Cargo section in your Owner's Manual. Improper loading of cargo or installation of accessories can affect motorcycle stability and handling, which could result in death or serious injury. (00021a)**

**⚠WARNING**

**Do not exceed the motorcycle's Gross Vehicle Weight Rating (GVWR) or Gross Axle Weight Rating (GAWR). Exceeding these weight ratings can affect stability and handling, which could result in death or serious injury. (00016e)**

- GVWR is the sum of the weight of the motorcycle, accessories, and the maximum weight of the rider, passenger and cargo that can be safely carried.
- GAWR is the maximum amount of weight that can be safely carried on each axle.
- The GVWR and GAWR are shown on the information plate which is located on the frame down tube.

**⚠WARNING**

**Do not pull a trailer with a motorcycle. Pulling a trailer can cause tire overload, reduced braking efficiency and adversely affect stability and handling, which could result in death or serious injury. (00018b)**

## Accessory and Cargo Guidelines

The following guidelines should be used when equipping a motorcycle, carrying passengers and/or cargo.

**⚠WARNING**

**Travel at speeds appropriate for road and conditions and never travel faster than posted speed limit. Excessive speed can cause loss of vehicle control, which could result in death or serious injury. (00008a)**

- Do not exceed the legal speed limit or drive too fast for existing conditions. Always reduce speed when poor driving conditions exist. High speed increases the influence of any other condition affecting stability and increases the possibility of loss of control.
- Pay strict attention to road surfaces and wind conditions. Any two wheeled vehicle may be subject to upsetting forces such as wind blasts from passing trucks, holes in the pavement, rough road surfaces, rider control error, etc. These forces may influence the handling

characteristics of your motorcycle. If this happens, reduce speed and guide the motorcycle with a relaxed grip to a controlled condition. Do not brake abruptly or force the handlebar. This may aggravate an unstable condition.

- Keep cargo weight concentrated close to the motorcycle and as low as possible. This minimizes the change in the motorcycle's center of gravity.
- Distribute weight evenly on both sides of the vehicle.
- Do not load bulky items too far behind the rider or add weight to the handlebars or front forks.
- Do not exceed maximum specified load in each saddlebag.
- Luggage racks are designed for lightweight items. Do not overload racks.
- Be sure cargo is secure and will not shift while riding and recheck the cargo periodically. Accessories that change the operator's riding position may increase reaction time and affect handling of the motorcycle.
- Additional electrical equipment may overload the motorcycle's electrical system possibly resulting in electrical system and/or component failure.

**⚠WARNING**

**The front and/or rear guard(s) can provide limited leg and cosmetic vehicle protection under unique circumstances. (Fall over while stopped, very slow speed slide.) It is not made or intended to provide protection from bodily injury in a collision with another vehicle or any other object. (00022a)**

Large surfaces such as fairings, windshields, back rests, and luggage racks can adversely affect handling. Only genuine Harley-Davidson items designed specifically for the motorcycle model should be used with proper installation.

**⚠WARNING**

**Do not use aftermarket parts and custom made front forks which can adversely affect performance and handling. Removing or altering factory installed parts can adversely affect performance and could result in death or serious injury. (00001a)**

**⚠WARNING**

**Only Touring Harley-Davidson Motorcycles are suitable for sidecar use. Consult a Harley-Davidson dealer. Use of motorcycles other than Touring models with sidecars could result in death or serious injury. (00040a)**

# Identification

## 2006 Dyna Models

---

This section provides left and right side views of your 2006 Dyna motorcycle. Please refer to the CONTROLS AND INDICATORS and OPERATION sections for specific details about each

component.

*NOTE:*

*Specifications in this publication may not match those of official certification in some markets due to timing of publication printing, variance in testing methods, and/or vehicle differences. Customers seeking officially recognized regulatory specifications for their vehicle should refer to certification documents and/or contact their respective dealer or distributor.*

1. Fuel gauge
2. Electrical enclosure
3. Clutch inspection cover
4. Primary chain drain plug
5. Engine oil filter
6. Clutch cable adjuster

**2006 Dyna Super Glide (FXD) - Left Side View**

1. Fuel filler cap
2. Front brake master cylinder and reservoir
3. Speedometer
4. Ignition/headlamp key switch
5. Fork lock
6. Air cleaner
7. Engine oil fill plug and dipstick
8. Rear brake master cylinder and reservoir
9. Battery compartment cover

**2006 Dyna Super Glide (FXD) - Right Side View**

1. Speedometer
2. Clutch cable adjuster
3. Fuel gauge
4. Electrical enclosure
5. Clutch inspection cover
6. Primary chaincase drain plug
7. Engine oil filter

**2006 Dyna Super Glide Custom (FXDC) - Left Side View**

1. Battery compartment cover
2. Fuel filler cap
3. Front brake master cylinder and reservoir
4. Speedometer
5. Ignition/headlamp key switch
6. Fork lock
7. Air cleaner
8. Engine oil fill plug and dipstick
9. Rear brake master cylinder and reservoir

**2006 Dyna Super Glide Custom (FXDC) - Right Side View**

1. Fuel gauge
2. Tachometer
3. Electrical enclosure
4. Clutch inspection cover
5. Primary chaincase drain plug
6. Engine oil filter
7. Clutch cable adjuster

**2006 Dyna Low Rider (FXDL) - Left Side View**

1. Battery compartment cover
2. Fuel filler cap
3. Speedometer
4. Front brake master cylinder and reservoir
5. Ignition/headlamp key switch
6. Fork lock
7. Air cleaner
8. Engine oil fill plug and dipstick
9. Rear brake master cylinder and reservoir

**2006 Dyna Low Rider (FXDL) - Right Side View**

1. Speedometer
2. Fuel gauge
3. Electrical enclosure
4. Clutch inspection cover
5. Primary chaincase drain plug
6. Engine oil filter
7. Clutch cable adjuster

**2006 Dyna Wide Glide (FXDWG) - Left Side View**

1. Fuel filler cap
2. Front brake master cylinder and reservoir
3. Ignition/headlamp key switch
4. Fork lock
5. Air cleaner
6. Engine oil fill plug and dipstick
7. Rear brake master cylinder and reservoir
8. Battery compartment cover

**2006 Dyna Wide Glide (FXDWG) - Right Side View**

1. Fuel gauge
2. Electrical enclosure
3. Clutch inspection cover
4. Primary chaincase drain plug
5. Engine oil filter
6. Clutch cable adjuster

**2006 Super Glide Anniversary (FXD35) - Left Side View**

1. Battery compartment cover
2. Ignition/headlamp key switch
3. Fuel filler cap
4. Speedometer
5. Front brake master cylinder and reservoir
6. Fork lock
7. Air cleaner
8. Engine oil fill plug and dipstick
9. Rear brake master cylinder and reservoir

**2006 Super Glide Anniversary (FXD35) - Right Side View**

1. Fuel gauge
2. Electrical enclosure
3. Clutch inspection cover
4. Primary chaincase drain plug
5. Engine oil filter
6. Clutch cable adjuster

**2006 Street Bob™ (FXDB) - Left Side View**

1. Fuel filler cap
2. Speedometer
3. Front brake master cylinder and reservoir
4. Ignition/headlamp key switch
5. Fork lock
6. Air cleaner
7. Engine oil fill plug and dipstick
8. Rear brake master cylinder and reservoir
9. Battery compartment cover

**2006 Street Bob™ (FXDB) - Right Side View**

## Vehicle Identification Number

See V.I.N. Stamping Location. The full 17 digit serial or Vehicle Identification Number (V.I.N.) is stamped on the steering head and on a label located on the right front frame down tube.

An abbreviated V.I.N. is stamped on the left side crankcase at the base of the rear cylinder.

*NOTE:*

*Always give the full 17 digit Vehicle Identification Number when ordering parts or making any inquiry about your motorcycle.*

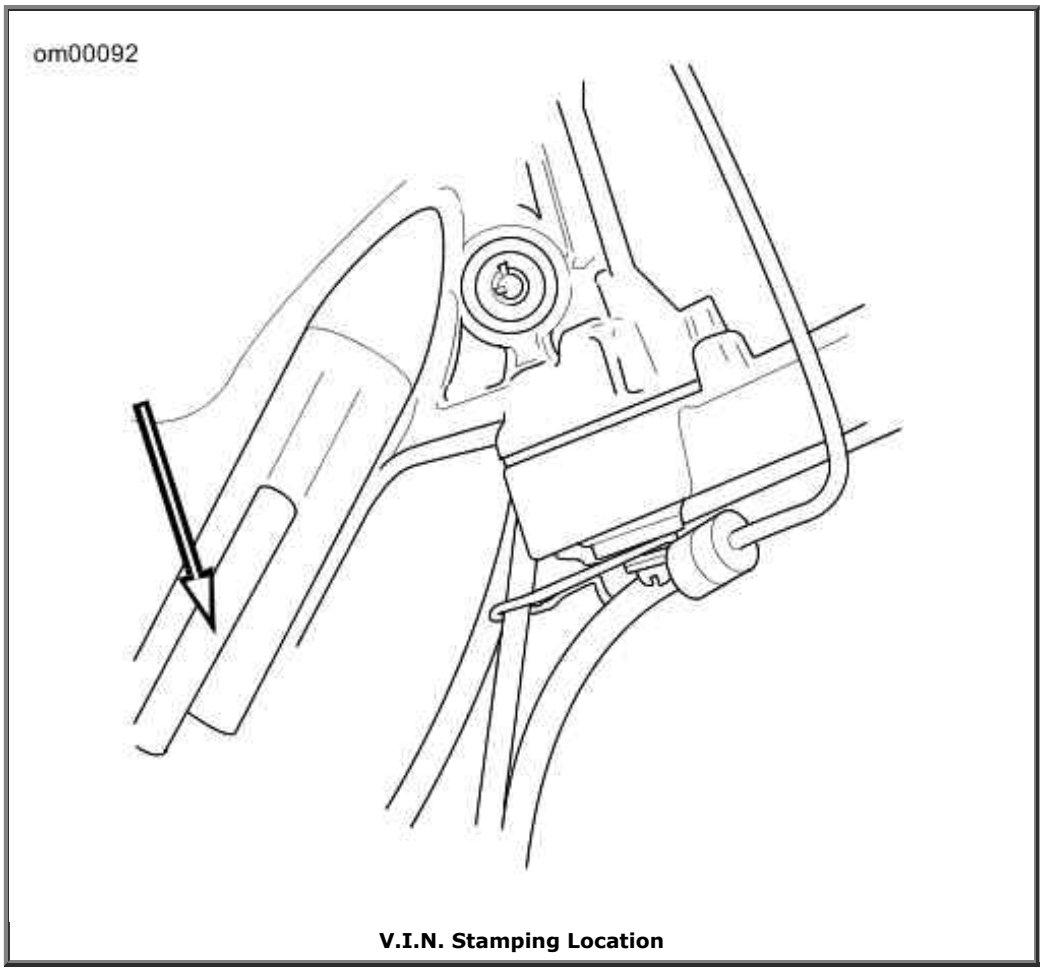


**V.I.N. Stamping Location**

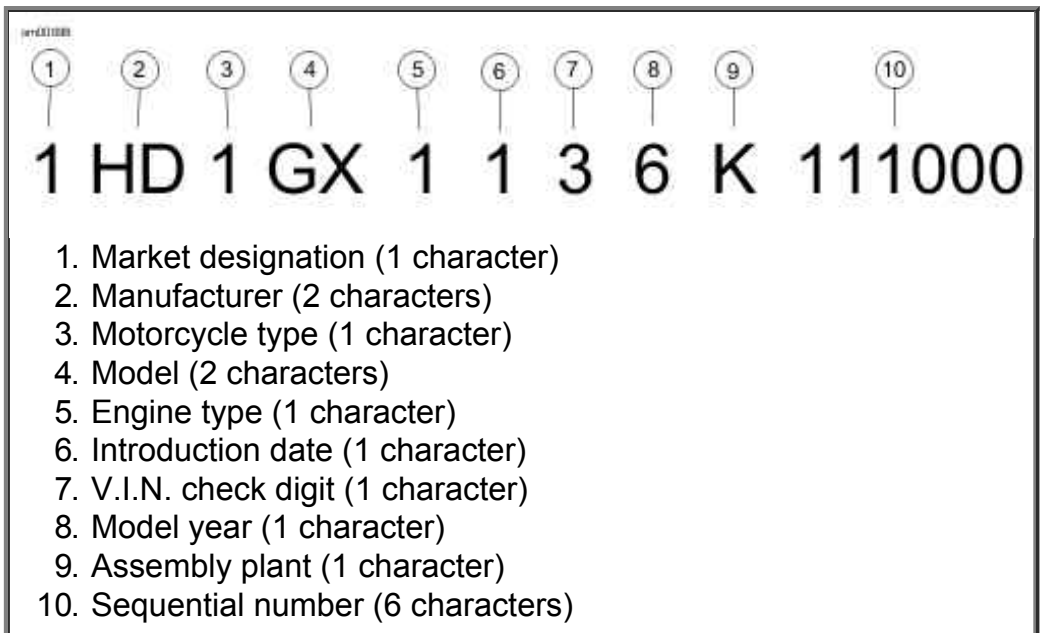


**Typical Harley-Davidson Vehicle Identification Number**

**2006 Harley-Davidson Dyna V.I.N. Breakdown**

| POSITION | DESCRIPTION | POSSIBLE VALUES |
|---|---|---|
| 1 | Market designation | 1=Originally manufactured for sale **within** the United States<br>5=Originally manufactured for sale **outside** of the United States |
| 2 | Manufacturer | HD=Harley-Davidson |
| 3 | Motorcycle type | 1=Heavyweight motorcycle |
| 4 | Model | See 2006 Dyna Model V.I.N. Codes table |
| 5 | Engine type | 1=Fuel injected |

| | | |
|---|---|---|
| 5 | Engine type | 1=Fuel injected |
| 6 | Introduction date | 1=Regular<br>2=Mid-year<br>3=California/regular<br>4=Cosmetic changes<br>5=California/cosmetic changes<br>6=California/mid-year |
| 7 | V.I.N. check digit | Can be 0-9 or X |
| 8 | Model year | 6=2006 |
| 9 | Assembly plant | K=Kansas City, MO USA |
| 10 | Sequential number | varies |

**2006 Dyna V.I.N. Model Codes**

| CODE | MODEL NAME |
|---|---|
| GM | FXD |
| GV | FXDC |
| GN | FXDL |
| GP | FXDWG |
| GW | FXD35 |
| GX | FXDB |

# Specifications

## Specifications: 2006 Dyna Models

---

**Engine: 2006 Twin Cam Models**

| ITEM | SPECIFICATION | |
|---|---|---|
| Number of cylinders | 2 | |
| Type | 4-cycle, 45 degree<br>V-Type, air cooled | |
| Compression ratio | 8.9-1 | |
| Bore | 3.75 in. | 95.18 mm |
| Stroke | 4.00 in. | 101.52 mm |
| Displacement | 88 cu. in. | 1450 cc |
| Torque | 85.0 ft-lbs @ 3000 | 115.0 Nm @ 3000 |

| | | |
|---|---|---|
| | RPM | RPM |

**Ignition System: 2006 Twin Cam Models**

| COMPONENT | SPECIFICATION | |
|---|---|---|
| Ignition timing | Not adjustable | |
| Battery | 12 volt, 19 amp/hr,<br><br>sealed and maintenance free | |
| Spark plug type | HD-6R12 | |
| Spark plug size | 12 mm | |
| Spark plug gap | 0.038-0.043 in. | 0.97-1.09 mm |
| Spark plug torque | 12-18 ft-lbs | 16.3-24.4 Nm |

**Transmission: 2006 Dyna Models**

| TRANSMISSION | SPECIFICATION |
|---|---|
| Type | Constant mesh, foot shift |
| Speeds | 6 forward |

**Sprocket Teeth: 2006 Dyna Models**

| DRIVE | ITEM | NUMBER OF TEETH | |
|---|---|---|---|
| | | DOM | HDI |
| Primary | Engine | 34 | 34 |
| | Clutch | 46 | 46 |
| Final | Transmission | 32 | 32 |
| | Rear wheel | 70 | 68 |

**Gear Ratios: 2006 Dyna Models**

| GEAR | RATIO | |
|---|---|---|
| | DOM | HDI |
| 1st Gear | 9.87 | 9.60 |
| 2nd Gear | 6.80 | 6.61 |
| 3rd Gear | 5.09 | 4.95 |
| 4th Gear | 4.17 | 4.05 |
| 5th Gear | 3.46 | 3.36 |
| 6th Gear | 2.96 | 2.88 |

*NOTE:*

*Gross Vehicle Weight Rating (GVWR) (maximum allowable loaded vehicle weight) and corresponding Gross Axle Weight Ratings (GAWR) are given on a label located on the frame below the steering head.*

**Weights: 2006 Dyna Models**

| ITEM | FXD | | FXDC | | FXDL | | FXDWG | | FXD35 | | FXDB | |
|---|---|---|---|---|---|---|---|---|---|---|---|---|
| | LB. | KG | LB. | KG | LB. | KG | LB. | KG | LB. | KG | LB. | KG |
| Weight (as shipped from factory) | 632 | 287 | 641 | 291 | 641 | 291 | 650 | 295 | 645 | 293 | 634 | 285 |
| GVWR | 1085 | 493 | 1085 | 493 | 1085 | 493 | 1085 | 493 | 1085 | 493 | 1085 | 493 |
| GAWR front | 390 | 177 | 390 | 177 | 390 | 177 | 390 | 177 | 390 | 177 | 390 | 177 |
| GAWR rear | 695 | 316 | 695 | 316 | 695 | 316 | 695 | 316 | 695 | 316 | 965 | 316 |

**Dimensions: 2006 Dyna Models**

| ITEM | FXD | | FXDC | | FXDL | | FXDWG | | FXD35 | | FXDB | |
|---|---|---|---|---|---|---|---|---|---|---|---|---|
| | IN. | MM | IN. | MM | IN. | MM | IN. | MM | IN. | MM | IN. | MM |
| Wheel base | 64.2 | 1630 | 64.2 | 1630 | 64.6 | 1640 | 68.3 | 1735 | 64.2 | 1630 | 64.2 | 1630 |
| Overall length | 92.8 | 2357 | 92.6 | 2353 | 93.1 | 2364 | 97.5 | 2477 | 92.9 | 2360 | 92.8 | 2358 |
| Overall width | 36.7 | 931 | 34.9 | 886 | 36.3 | 921 | 36 | 915 | 38.9 | 989 | 37.5 | 953 |
| Road clearance | 6.0 | 153 | 6.0 | 153 | 5.6 | 142 | 6.2 | 158 | 6.0 | 153 | 5.6 | 142 |
| Overall height | 46.8 | 1189 | 47.6 | 1210 | 47.0 | 1194 | 49.3 | 1251 | 47.7 | 1212 | 50.4 | 1279 |
| Saddle height | 27.6 | 700 | 27.8 | 705 | 26.8 | 680 | 28.5 | 723 | 27.8 | 705 | 26.8 | 680 |

**Capacities: 2006 Dyna Models**

| ITEM | FXDWG/FXD35 | | FXD/C | | FXDL | | FXDB | |
|---|---|---|---|---|---|---|---|---|
| | U.S. | LITERS | U.S. | LITERS | U.S. | LITERS | U.S. | LITERS |
| Fuel tank (total) | 5.1 gal | 19.3 | 4.8 gal | 18.2 | 4.7 gal | 17.8 | 4.7 | 17.8 |
| Oil tank with filter | 3.0 qt | 2.8 | 3.0 qt | 2.8 | 3.0 qt | 2.8 | 3.0 | 2.8 |
| Transmission (approximate) | 32 oz. | 0.95 | 32 oz. | 0.95 | 32 oz. | 0.95 | 32 oz. | 0.95 |
| Primary chaincase (approximate) | 32 oz. | 0.95 | 32 oz. | 0.95 | 32 oz. | 0.95 | 32 oz. | 0.95 |

**Tire Pressures: 2006 Dyna Models**

| MODEL | LOAD | TIRE PRESSURE (COLD) | | | |
|---|---|---|---|---|---|
| | | FRONT | | REAR | |
| | | PSI | kPa | PSI | kPa |
| All models | Solo rider | 30 | 206 | 36 | 248 |

| | | | | | |
|---|---|---|---|---|---|
| All models | Solo rider | 30 | 206 | 36 | 248 |
| | Rider and passenger | 30 | 206 | 40 | 275 |
| 2006 motorcycles use Dunlop Harley-Davidson tires only. | | | | | |

**Tire Sizes: 2006 Dyna Models**

| MODEL | MOUNT | SIZE | NUMBER |
|---|---|---|---|
| FXD, FXDC, FXDL, FXD35 | Front | 19 in. | D401F 100/90-19 |
| FXDWG, FXDB | Front | 21 in. | D402F MH90-21 |
| All models | Rear | 17 in. | K591 160/70B17 |

**Bulb Chart: 2006 Dyna Models**

| LAMP | DESCRIPTION | BULBS REQUIRED | CURRENT DRAW (AMPERAGE) | H-D PART NUMBER |
|---|---|---|---|---|
| Headlamp | High beam/low beam | 1 | 5.0/4.58 | 68329-03 |
| | Position lamp international | 1 | 0.32 | 53438-92 |
| Tail and stop lamp | Tail lamp | 1 | 0.59 | 68167-04 |
| | Stop lamp | 1 | 2.10 | 68167-04 |
| | Tail lamp international | 1 | 0.59 | 68167-04 |
| | Stop lamp international | 1 | 2.10 | 68167-04 |
| Turn signal lamp | Front/running | 2 | 2.25/0.59 | 68168-89 |
| | Front international | 2 | 1.75 | 68163-84 |
| | Rear | 2 | 2.25 | 68572-64B |
| | Rear international | 2 | 1.75 | 68163-84 |
| Instrument panel lamps<br><br>FXD, FXDC, FXDL, and FXDB models<br><br>(FXDWG and FXD35 use an LED assembly.) | High beam indicator | 1 | 0.15 | 68024-94 |
| | Oil pressure indicator | 1 | 0.15 | 68024-94 |
| | Neutral indicator | 1 | 0.15 | 68024-94 |
| | Turn signal indicator | 2 | 0.08 | 68024-94 |
| Fuel Gauges: All models use an LED built into the gauge. | | | | |

## Tire Data

**⚠WARNING**

**Match tires, tubes, air valves and caps to the correct wheel rim. Contact a Harley-Davidson dealer. Mismatching can result in damage to the tire bead, allow tire slippage on the rim or cause tire failure, which could result in death or serious injury. (00023a)**

**⚠WARNING**

**Use only Harley-Davidson approved tires. See a Harley-Davidson dealer. Using non-approved tires can adversely affect stability, which could result in death or serious injury. (00024a)**

Tubeless tires fitted with the correct size inner tubes may be used on all Harley-Davidson laced (wire spoked) wheels. Protective rubber rim strips must be used with tubeless tires (fitted with correct size inner tubes) when mounted on laced (wire spoked) wheels.

**⚠WARNING**

**Use inner tubes on laced (wire spoked) wheels. Using tubeless tires on laced wheels can cause air leaks, which could result in death or serious injury. (00025a)**

Tubeless tires are used on all Harley-Davidson cast and disc wheels.

Tire sizes are molded on the tire sidewall. Inner tube sizes are printed on the tube.

**⚠WARNING**

**Harley-Davidson front and rear tires are not the same. Interchanging front and rear tires can cause tire failure, which could result in death or serious injury. (00026a)**

**⚠WARNING**

**Do not inflate tire beyond maximum pressure as specified on sidewall. Over inflated tires can blow out, which could result in death or serious injury. (00027a)**

**⚠WARNING**

**Harley-Davidson tires are equipped with wear bars that run horizontally across the tread. When wear bars become visible and only 1/32 in. (0.8 mm) tread depth remains, replace tire immediately. Using a worn tire can adversely affect stability and handling, which could result in death or serious injury. Use only Dunlop Harley-Davidson replacement tires. (00090a)**

See Specifications: 2006 Dyna Models for tire pressures and sizes.

## Gasoline Blends

Your motorcycle was designed to get the best performance and efficiency using unleaded gasoline. Most gasoline is blended with alcohol and/or ether to create oxygenated blends. The type and amount of alcohol or ether added to the fuel is important.

**CAUTION**

**Do not use gasoline that contains methanol. Doing so can result in fuel system component failure, engine damage and/or equipment malfunction. (00148a)**

- Gasoline containing METHYL TERTIARY BUTYL ETHER (MTBE): Gasoline/MTBE blends are a mixture of gasoline and as much as 15% MTBE. Gasoline/MTBE blends can be used in your motorcycle.
- ETHANOL is a mixture of 10% ethanol (Grain alcohol) and 90% unleaded gasoline. Gasoline/ethanol blends can be used in your motorcycle if the ethanol content does **not** exceed 10%.
- REFORMULATED OR OXYGENATED GASOLINES (RFG): Reformulated gasoline is a term used to describe gasoline blends that are specifically designed to burn cleaner than other types of gasoline, leaving fewer tailpipe emissions. They are also formulated to evaporate less when you are filling your tank. Reformulated gasolines use additives to oxygenate the gas. Your motorcycle will run normally using this type of gas and Harley-Davidson recommends you use it when possible, as an aid to cleaner air in our environment.

You may find that some gasoline blends adversely affect the starting, driveability or fuel efficiency of your motorcycle. If you experience one or more of these problems, it is recommended you operate your motorcycle on straight unleaded gasoline.

## Fuel

Refer to Octane Ratings. Always use a good quality unleaded gasoline. Octane ratings are usually found on the pump.

**⚠WARNING**

**Avoid spills. Slowly remove filler cap. Do not fill above bottom of filler neck insert, leaving air space for fuel expansion. Secure filler cap after refueling. Gasoline is extremely flammable and highly explosive, which could result in death or serious injury. (00028a)**

**⚠WARNING**

**Use care when refueling. Pressurized air in fuel tank can force gasoline to escape through filler tube. Gasoline is extremely flammable and highly explosive, which could**

**result in death or serious injury. (00029a)**

Modern service station pumps dispense a high flow of gasoline into a motorcycle fuel tank making air entrapment and pressurization a possibility.

**Octane Ratings**

| SPECIFICATION | RATING |
|---|---|
| Pump Octane (R+M)/2 | 91 (95 RON) |

## Catalytic Converters

California and all international motorcycles are equipped with catalytic converters.

**CAUTION**

**Do not operate catalytic converter-equipped vehicle with engine misfire or a non-firing cylinder. If you operate the vehicle under these conditions, the exhaust will become abnormally hot, which can cause vehicle damage, including emission control loss. (00149a)**

**CAUTION**

**Use only unleaded fuel in catalytic converter-equipped motorcycles. Using leaded fuel will damage the emission control system. (00150b)**

# Controls and Indicators

## General: Controls and Indicators

**⚠WARNING**

**Read the CONTROLS AND INDICATORS section before riding your motorcycle. Failure to understand the operation of the motorcycle could result in death or serious injury. (00043a)**

Some features explained are unique to certain models. These features may be available as accessories for your Harley-Davidson motorcycle. See a Harley-Davidson dealer for a complete list of accessories that will fit your specific motorcycle.

Refer to the side view photographs in the front of the manual to locate the items discussed in this section. See 2006 Dyna Models.

## Ignition/Headlamp Key Switch: Dyna Models

**⚠WARNING**

**The automatic-on headlamp feature provides increased visibility of the rider to other motorists. Be sure headlamp is on at all times. Poor visibility of rider to other motorists can result in death or serious injury. (00030b)**

See YOUR OWNER'S MANUAL section. Be sure to record all your key numbers in the space provided at the front of this book.

See Ignition/Headlamp Key Switch: Dyna Models. The ignition/lamp key switch controls electrical functions of the motorcycle.

**CAUTION**

**Protect your vehicle against theft. After parking your motorcycle, lock the steering head and remove ignition key from switch. Failure to lock your motorcycle may result in theft and/or equipment damage. (00151a)**

**⚠WARNING**

**Do not operate vehicle with forks locked. Locking the forks restricts the vehicle's turning ability, which could result in death or serious injury. (00035a)**

**CAUTION**

**Do not lubricate barrel locks with petroleum based lubricants or graphite. Inoperative locks may result. (00152a)**

**CAUTION**

**Turn the ignition switch to the OFF position and remove the key before locking the motorcycle. Leaving the key in the ACC position will keep the instrument lights on and result in a discharged battery. (00155a)**

1. To remove the key from the ignition, push the key in and turn it counterclockwise.
2. Remove the key.

*NOTES:*

- *Refer to Ignition/Headlamp Key Switch: 2006 Dyna Models for key switch functions.*
- *The lamps work when the switch is in the IGNITION position as required by law in some localities.*
- *On the FXDWG and FXD35 models remove the ignition key from the ignition lock while*

*operating the motorcycle. If you do not remove the key, it can fall out during operation.*

**Ignition/Headlamp Key Switch: 2006 Dyna Models**

| MODEL | LOCATION AND OPERATION | SWITCH POSITION | FUNCTION |
|---|---|---|---|
| FXD, FXDC, FXDL, FXDB | On the right front of the motorcycle on the steering head.<br><br>To unlock the switch and the front fork, push the key in and turn it counterclockwise.<br><br>HDI: Press the lever/key (international) in and turn it clockwise to the OFF position. Be sure to push key in to move key to either position.<br><br>**Fork Lock:** To lock the fork, move the fork to the full left position. Push down on key and turn it to the right, clockwise, to the closed lock icon. Remove the key. | OFF | Ignition, lamps and accessories are off. |
| | | ACC* | Accessories and hazard warning flasher can be turned on. Instrument lamps are on. Brake lamp and horn can be activated. Key may be removed except on international models. |
| | | IGNITION* | Ignition, lamps and accessories are on. |
| FXDWG<br><br>FXD35 | Switch is on fuel tank instrument panel.<br><br>Switch is locked or unlocked by lifting switch cover, inserting key and turning key counterclockwise to lock or clockwise to unlock. Key may be removed in any position.<br><br>**Fork Lock:** The fork lock is on the right front of the motorcycle on the steering head. Insert key and press to turn the lock to the closed lock icon. Remove the key.<br><br>To unlock the fork lock, insert key and press to turn the lock to the open lock icon. Remove the key. | OFF | Ignition, lamps and accessories are off. |
| | | ACC* | Accessories are on. Hazard warning flashers can be operated. Instrument lamps are on. Brake lamp and horn can be activated. |
| | | IGNITION* | Ignition, lamps and accessories are on. |
| *International models have an additional function - position lamp and tail lamp are also on. | | | |

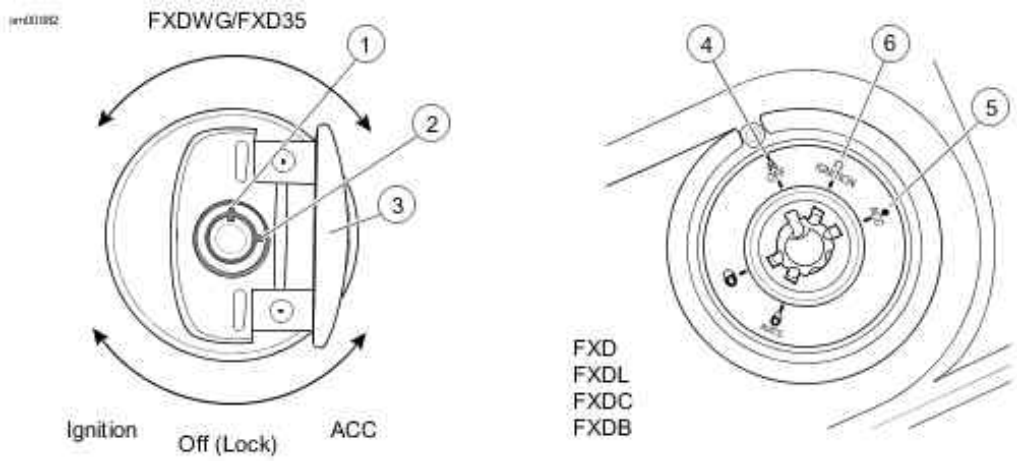


1. Lock position
2. Unlock position
3. Open switch cover
4. OFF
5. ACC
6. Ignition

**Ignition/Headlamp Key Switch: Dyna Models**

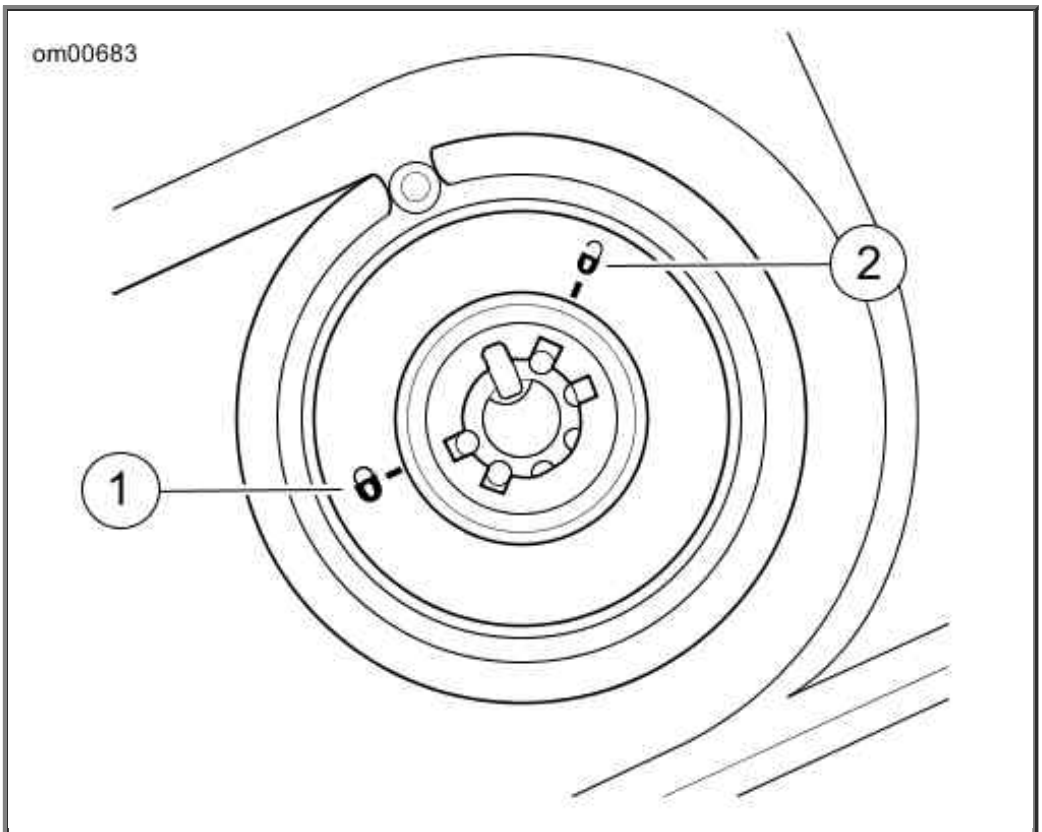


1. Locked
2. Unlocked

**Fork Lock: FXDWG/FXD35**

## Fork Lock: Dyna Models

**CAUTION**

**Protect your vehicle against theft. After parking your motorcycle, lock the steering head and remove ignition key from switch. Failure to lock your motorcycle may**

**result in theft and/or equipment damage. (00151a)**

**FXD, FXDC, FXDL, and FXDB:** See Ignition/Headlamp Key Switch: Dyna Models. The fork lock is incorporated with the Ignition/Headlamp Key Switch found on the right hand side of the steering head. Refer to Ignition/Headlamp Key Switch: Dyna Models.

**FXDWG and FXD35:** See Fork Lock: FXDWG/FXD35. With the Ignition/Headlamp Key Switch located on the console, only the fork lock is found in the right hand side steering head.

**⚠WARNING**

**Do not operate vehicle with forks locked. Locking the forks restricts the vehicle's turning ability, which could result in death or serious injury. (00035a)**

Using the fork lock immediately after parking your motorcycle will discourage unauthorized use or theft when parking your motorcycle.

## To Lock Fork

1. Turn fork to full left position.
2. Insert ignition key into fork lock.
3. Turn left (counterclockwise) to lock position.
4. Remove ignition key.

## To Unlock Fork

1. Insert ignition key into fork lock.
2. Turn right (clockwise) to unlock position.

### Hand Controls: Basic Operation

## Electric Starter Switch

*NOTE:*

*Off/Run switch MUST be in RUN position to operate engine.*

See Handlebar Controls. The electric starter switch is located on the right handlebar control group. See Starting the Engine: EFI Models for detailed operation procedures.

1. Put the engine off/run switch in the RUN position and the transmission in neutral. Neutral (green) indicator lamp should be illuminated.
2. See Ignition/Headlamp Key Switch: Dyna Models. Turn ignition/headlamp key switch to ON and push the START switch to operate starter motor.

## Engine OFF/RUN Switch

See Handlebar Controls. The engine off/run switch (7) turns the ignition power ON or OFF. The engine off/run switch is located on the right handlebar control. Push the top portion of the engine off/run switch to turn off ignition power and shut the engine off. Push the bottom portion of the engine off/run switch to turn on ignition power.

*NOTES:*

- *The engine off/run switch must be in the ON position to start or operate the engine.*
- *The engine off/run switch should be used to shut the engine off.*

1. To shut the engine off, push the top of the off/run switch to the ignition OFF position.
2. See Ignition/Headlamp Key Switch: Dyna Models. Turn the ignition key to the OFF position to turn the ignition power completely OFF.

## Throttle Control Grip

See Handlebar Controls. The throttle control grip (9) is located on the right handlebar control and is operated with the right hand.

To reduce rider fatigue on long trips, a spring loaded throttle friction adjustment screw (10) is located at the bottom of the throttle grip clamp on non-cruise equipped models.

1. Slowly turn throttle control grip clockwise (toward the front of the bike) to close the throttle (decelerate).
2. Slowly turn throttle control grip counterclockwise (toward rear of bike) to open the throttle (accelerate).

**⚠WARNING**

**Do not tighten throttle friction adjustment screw to the point where the engine will not return to idle automatically. Over-tightening can lead to loss of vehicle control, which could result in death or serious injury. (00031b)**

3. Unscrew the throttle friction adjustment screw so the throttle returns to the idle position when the hand is removed from the grip.
4. Screw the throttle adjustment screw in to increase friction on grip. This provides a damping effect on throttle motion.

*NOTE:*

*The throttle friction adjustment screw should not be used under normal stop and go operating conditions.*

## Clutch Hand Lever

**⚠WARNING**

**Do not position fingers between hand control lever and handlebar grip. Improper hand positioning can impair control lever operation and cause loss of vehicle control, which could result in death or serious injury. (00032a)**

The clutch hand lever (1) is located on the left handlebar and is operated with the fingers of the left hand.

1. Slowly pull clutch hand lever in against handlebar grip to fully disengage clutch.
2. Shift to first gear using the gear shifter lever. See Shifting Gears: Six Speed.
3. Slowly release the clutch hand lever to engage clutch.

## Horn Switch

The horn is operated by pushing on the horn switch (2) located on the left handlebar control group.

## Headlamp Dimmer Switch

The headlamp dimmer switch (3) is located on the left handlebar. The switch has two positions to activate the headlamps high or low beams.

- Press the top of the headlamp dimmer beam switch to activate the high beam.
- Press the bottom of the headlamp dimmer switch to return to the low beam.

See Indicator Lamps. The (blue) high beam indicator lamp will illuminate when the high beam is on.

## Turn Signal Switches

Each handlebar control group contains a turn signal switch.

- The right turn signal switch (11) operates the right front and right rear flashing lamps.
- The left turn signal switch (4) operates the left front and left rear flashing lamps.

*NOTE:*

*Front turn signal lamps also function as running lamps (except International models).*

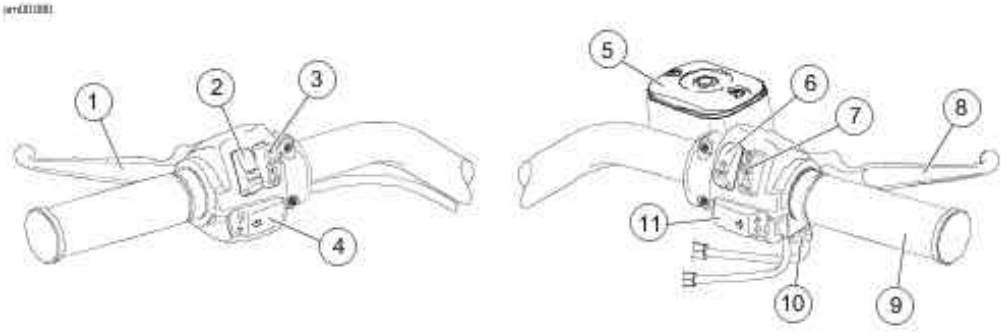


1. Clutch hand lever
2. Horn switch
3. Headlamp dimmer switch
4. Left turn signal switch
5. Master cylinder reservoir
6. Electric starter switch
7. Engine off/run switch
8. Brake hand lever
9. Throttle control grip
10. Throttle friction adjusting screw
11. Right turn signal switch

**Handlebar Controls**

## Turn Signal Switch Operation

The turn signal switches are used by the turn signal module to control turn signal operation based on vehicle speed, vehicle acceleration and turn completion.

Momentarily depress the desired turn signal switch. The turn signal lamps will begin and continue flashing until they are manually or automatically cancelled. As long as the motorcycle is stationary, the signals will flash.

*NOTES:*

- *If you are signaling to turn in one direction and you depress the switch for the opposite turn signal, the first signal is cancelled and the opposite side begins flashing.*
- *If you want to stop the lamps from flashing, briefly depress the turn signal switch a second time. The turn signal lamps will stop flashing.*

## Hazard Warning 4-Way Flasher

Use the following method to activate the four-way flashers.

1. With the ignition key ON and security system disarmed (models with security only), press the left and right turn signal switches at the same time.

2. Turn the ignition key OFF and arm the security system if present and desired. The four-way flashers will continue for two hours.

3. To cancel four-way flashing, disarm the security system if necessary, turn the ignition key ON and press the left and right turn signal switches at the same time.

This system allows a stranded vehicle to be left in the four-way flashing mode and secured until help is found.

## Indicator Lamps

See Indicator Lamps. Five indicator lamps are provided.

- The green TURN indicators will flash when turn signals are activated; therefore, flashing indicates the chosen turn direction. When the 4-way hazard flashers are operating, both turn indicators will flash simultaneously.
- The blue BEAM indicator lamp, when lit, signals high beam headlamp operation.
- The green NEUTRAL lamp, when lit, signals the transmission is in neutral gear.
- The red OIL indicator lamp, when lit, signals that oil is not circulating through the engine.

*NOTE:*

*The OIL indicator lamp will glow when the ignition is turned on prior to starting engine. With engine running, lamp should be off when engine speed is above idle.*

Several other circumstances that could cause the red oil indicator lamp to signal, include the following:

- If the oil pressure indicator lamp does not go off at speeds above idling, it is usually because of an empty oil tank or diluted oil.
- In freezing weather the oil feed may clog with ice and sludge, preventing oil circulation.
- A grounded oil signal switch wire.
- A faulty signal switch.
- A damaged or improperly installed check valve.
- Trouble with the pump.

**CAUTION**

**If the oil pressure indicator lamp remains lit, always check the oil supply first. If the oil supply is normal and the lamp is still lit, stop the engine at once and do not ride further until the trouble is located and the necessary repairs are made. Failure to do so may result in engine damage. (00157a)**

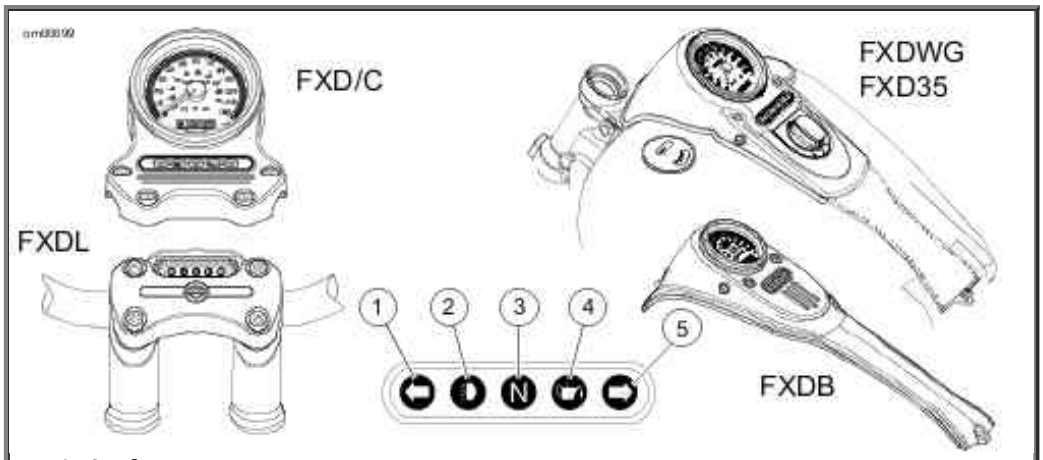


1. Left turn
2. High beam
3. Neutral
4. Oil
5. Right turn

**Indicator Lamps**

**Instruments: Dyna Models**

## Speedometer

**⚠WARNING**

**Travel at speeds appropriate for road and conditions and never travel faster than posted speed limit. Excessive speed can cause loss of vehicle control, which could result in death or serious injury. (00008a)**

See Instruments: Dyna Models. The speedometer registers miles per hour (U.S. models only) or kilometers per hour (international models only) of forward speed. The odometer registers the number of miles/kilometers the vehicle has traveled.

The electronic speedometer has a single display window for both the odometer and trip-odometer.

1. Press the function switch to change the display window on the speedometer face to either odometer or trip-odometer.

2. To reset the trip-odometer to zero, press button to reset speedometer display to the ODOMETER mode and hold the button in for approximately 2-3 seconds. The speedometer will switch to the trip-odometer mode and reset the display to zero.

## Tachometer

**CAUTION**

**See OPERATING RECOMMENDATIONS section. Do not operate the engine above maximum safe RPM as shown under OPERATION (red zone on tachometer). Lower the**

**RPM by upshifting to a higher gear or reducing the amount of throttle. Failure to lower RPM may cause equipment damage. (00159a)**

The tachometer registers the engine speed in revolutions per minute (RPM).

## Trip Odometer

Use the trip-odometer A or trip-odometer B to register number of miles/kilometers traveled on a trip or between refueling.

Odometer will display mileage when bike is OFF when function switch is pressed. There is no need to turn the bike on to check the odometer reading.

**CAUTION**

**Never attempt to tamper with or alter the vehicle odometer. This is illegal. Tampering with or altering a vehicle odometer may cause equipment damage. (00160a)**

## Tip Indicator Lamp

**⚠WARNING**

**If tip occurs, check all controls for proper operation. Restricted control movement can adversely affect the performance of the brakes, clutch or ability to shift, which could result in loss of vehicle control and death or serious injury. (00350a)**

Should motorcycle be tipped over, the word "tip" will appear in the odometer window. Engine will not start until reset. To reset, cycle ignition/headlamp key switch ON-OFF-ON.

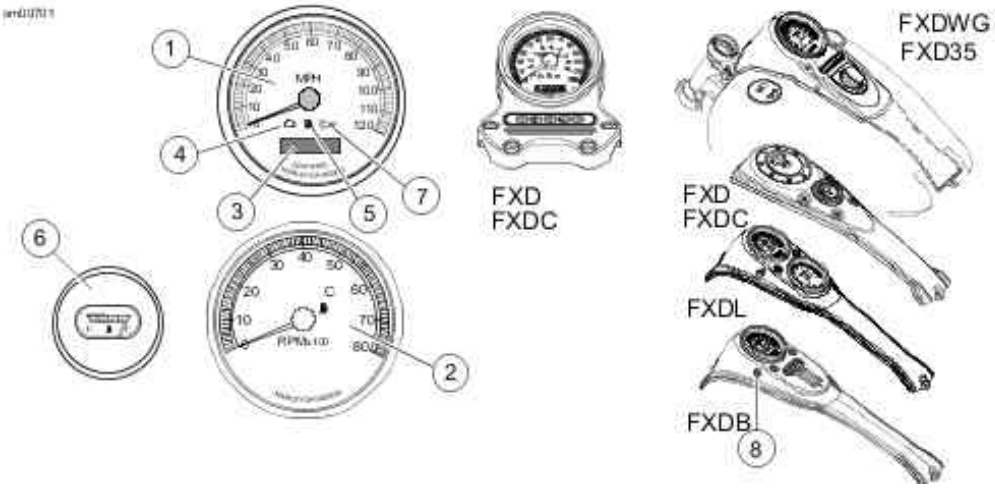


1. Speedometer
2. Tachometer
3. Odometer/trip-odometer
4. Engine check lamp
5. Low fuel warning lamp
6. Fuel gauge
7. Security system lamp
8. Function switch (back of gauge)

**Instruments: Dyna Models**

**Sequential Port Fuel Injection**

## Check Engine Lamp

See Check Engine and Low Fuel Lamp (typical). The engine check lamp is located inside the instrument cluster. Its purpose is to indicate whether or not the engine/engine management system is operating normally. The engine lamp color is red.

The engine lamp normally comes on when the bike's ignition is first turned on and remains on for approximately 4 seconds, as the engine management system runs a series of self-diagnostics.

If the engine lamp comes on at any other time, see a Harley-Davidson dealer.

## Low Fuel Lamp

See Check Engine and Low Fuel Lamp (typical). There is a low fuel warning lamp within the instrument cluster. The low fuel lamp lights up to indicate that there is approximately 1 gallon (3.79 liters) of gasoline left in the tank. The low fuel lamp color is amber.

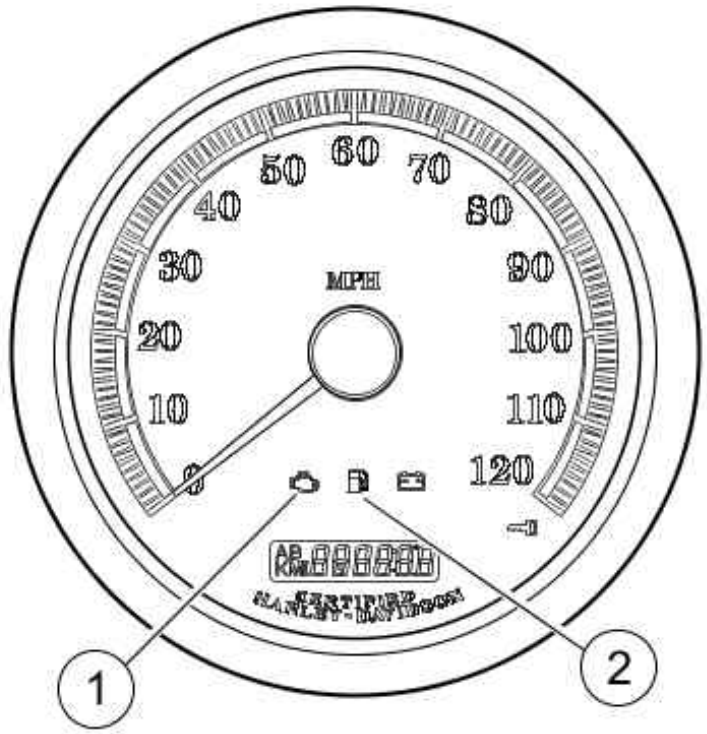


1. Check engine lamp
2. Low fuel lamp

**Check Engine and Low Fuel Lamp (typical)**

## Gear Shift Lever

**CAUTION**

**The clutch must be fully disengaged before attempting a gear shift. Failure to fully disengage the clutch can result in equipment damage. (00182a)**

The gear shift lever is located on the left side of the motorcycle and is operated with the left foot.

1. Push the gear shift lever all the way down (full stroke) to shift the transmission to the next lower gear.

2. Lift the gear shift lever all the way up (full stroke) to shift the transmission to the next higher gear.

   *NOTES:*
   - *Release the gear shift lever after each gear change.*
   - *The lever must return to its central position before another gear change can be made.*

See Shift Pattern. First gear is the last gear position that can be found by pushing the gear shift lever full stroke downward.

Neutral is located between first and second gear. The green neutral indicator lamp on the dash

will illuminate when the transmission is in neutral.

1. To shift from first gear to neutral, lift the gear shift lever 1/2 of its full stroke.
2. To shift from second gear to neutral, push the gear shift lever downward 1/2 of its full stroke.

When the motorcycle is standing still and the engine is not running, shifting gears requires a different technique. Before shifting in this condition, move the motorcycle backward and forward with the clutch fully disengaged (clutch lever pulled in). While maintaining slight pressure on the shift lever, shift from one gear to another.

Even with the engine running and the motorcycle standing still, difficulty may be experienced in shifting gears. This difficulty occurs because transmission gears are not turning and shifting parts are not lined up to permit engagement.

**CAUTION**

**When difficulty of shifting gears is experienced, do not under any circumstances, attempt to force the shift. The results of such abuse will be a damaged or broken shifter mechanism. (00161a)**

See Shifting Gears: Six Speed for more information.

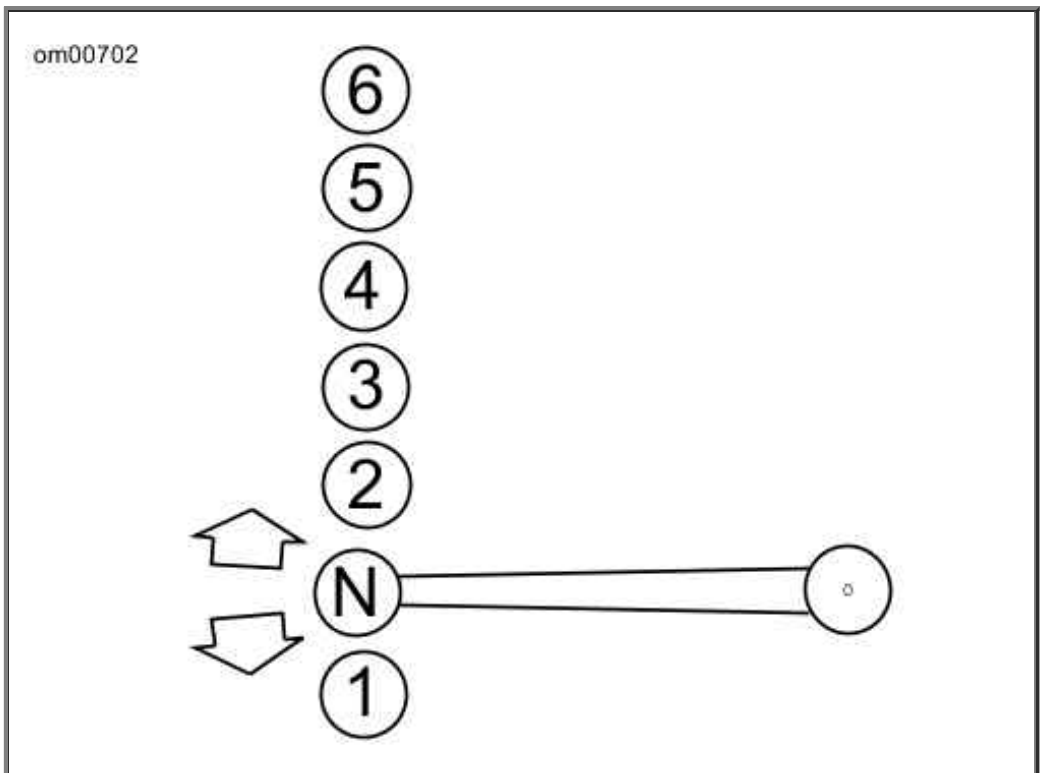


Shift Pattern

## Brake System

**⚠WARNING**

**Do not apply brake strongly enough to lock the wheel. A locked wheel will skid and can cause loss of vehicle control, which could result in death or serious injury.**

**(00053a)**

The rear brake pedal controls the rear wheel brake and is located on the motorcycle's right side. Operate the rear brake pedal with the right foot.

The front brake hand lever controls the front wheel brake and is located on the right handlebar. Operate the hand lever with the fingers of the right hand.

**⚠WARNING**

**Do not position fingers between hand control lever and handlebar grip. Improper hand positioning can impair control lever operation and cause loss of vehicle control, which could result in death or serious injury. (00032a)**

Brakes should be applied uniformly and evenly to prevent wheels from locking up. A balance between rear and front braking is generally best.

## Jiffy Stand

**⚠WARNING**

**Always park motorcycle on a level, firm surface. An unbalanced motorcycle can fall over, which could result in death or serious injury. (00039a)**

The jiffy stand is located on the left side of the motorcycle and swings outward to support the motorcycle for parking.

**⚠WARNING**

**The jiffy stand locks when placed in the full forward (down) position with vehicle weight on it. If the jiffy stand is not in the full forward (down) position with vehicle weight on it, the vehicle can fall over which could result in death or serious injury. (00006a)**

**⚠WARNING**

**Be sure jiffy stand is fully retracted before riding. If jiffy stand is not fully retracted, it can contact the road surface causing a loss of vehicle control, which could result in death or serious injury. (00007a)**

## Rear View Mirrors

**⚠WARNING**

**Objects in mirrors are closer than they appear. Use caution**

**when judging distance of objects in mirrors. Failure to judge correct distances could result in death or serious injury. (00033a)**

Your vehicle is equipped with two convex rear view mirrors.

This type of mirror is designed to give a much wider view to the rear than a flat mirror. However, cars and other objects seen in this type of mirror will look smaller and farther away than they actually are.

- Use caution when judging the size or relative distance of objects seen in rear view mirrors.
- Always adjust the rear view mirrors to clearly reflect the area behind the motorcycle before riding.

*NOTE:*

*Adjust mirrors so you can see a small portion of your shoulders in each mirror. This will help you establish the relative distance of vehicles to the rear of your motorcycle.*

### Fuel Filler Cap: Dyna Models

---

## FXDWG, FXD35, FXDL and FXDB Models

---

See Fuel Gauge and Fuel Filler Cap: FXD and FXDC Models. To open fuel filler cap, turn cap counterclockwise and lift up. To close, turn fuel filler cap clockwise until it clicks. The ratchet action of the cap prevents overtightening.

*NOTES:*

- *Fuel filler cap turns approximately a 3/4 turn before it starts unscrewing.*
- *FXDWG, FXD35, and FXDL model fuel filler caps are located on the right side of the fuel tank. The cap on the left side is the fuel gauge and is NOT removable.*

## FXD and FXDC Models

---

See Fuel Gauge and Fuel Filler Cap: FXD and FXDC Models. To open fuel filler cap, pull metal tab up and turn knob counterclockwise and remove cap.

See SAFE OPERATING RULES and review safety procedures which follow.

**CAUTION**

**Do not spill fuel onto the motorcycle while refueling. Immediately wipe up fuel spills on your motorcycle. Fuel can cause damage to cosmetic surfaces. (00147b)**

**CAUTION**

**Use only unleaded fuel in catalytic converter-equipped motorcycles. Using leaded fuel will damage the emission control system. (00150b)**

**⚠WARNING**

**Do not store motorcycle with gasoline in tank within the home or garage where open flames, pilot lights, sparks or electric motors are present. Gasoline is extremely flammable and highly explosive, which could result in death or serious injury. (00003a)**

**⚠WARNING**

**Avoid spills. Slowly remove filler cap. Do not fill above bottom of filler neck insert, leaving air space for fuel expansion. Secure filler cap after refueling. Gasoline is extremely flammable and highly explosive, which could result in death or serious injury. (00028a)**

**⚠WARNING**

**Do not use aftermarket fuel caps. Aftermarket fuel caps may fit improperly and leak, which could lead to death or serious injury. See a Harley-Davidson dealer for approved fuel caps. (00034a)**

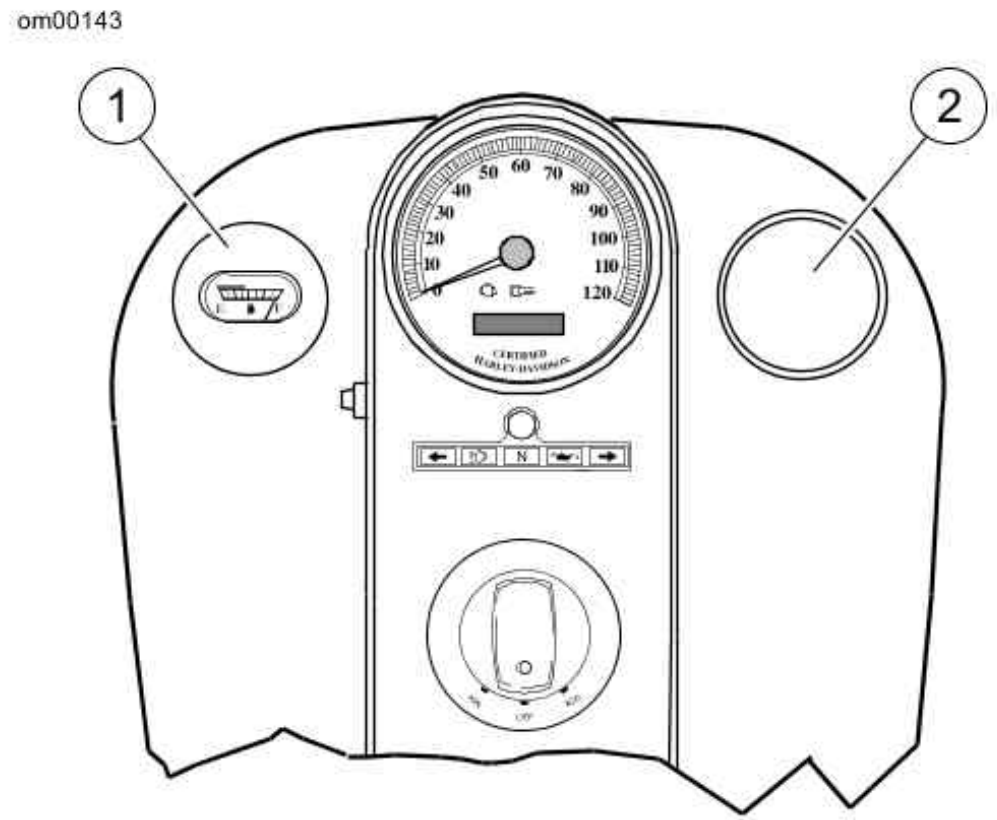


1. Fuel gauge
2. Fuel filler cap

**Fuel Gauge and Fuel Filler Cap: FXDL, FXDWG, FXD35 and FXDB Models**

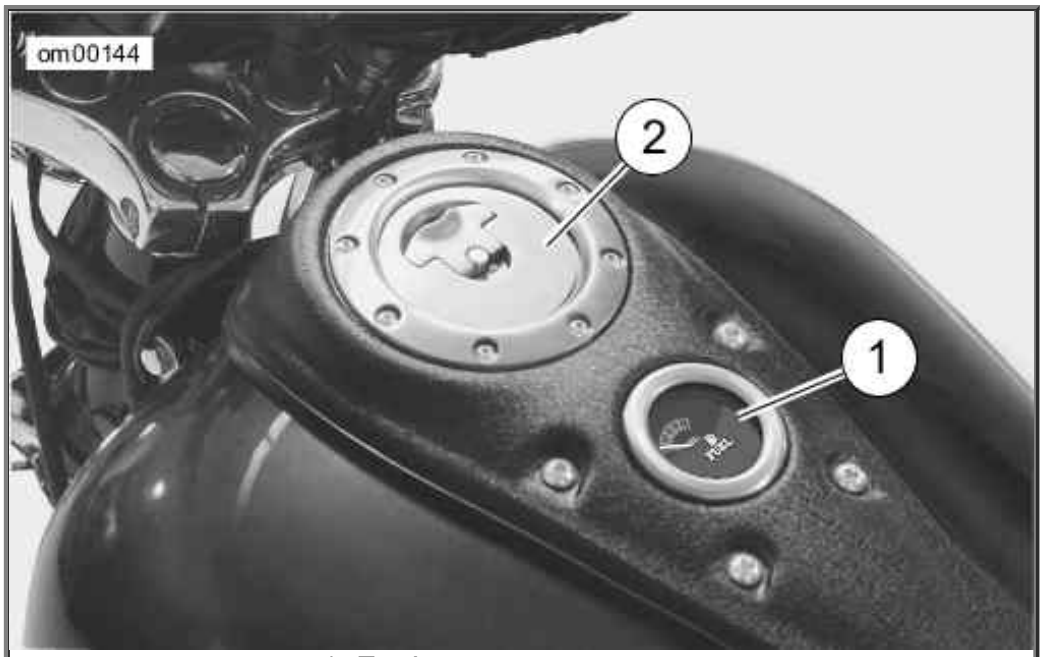


1. Fuel gauge
2. Fuel filler cap

**Fuel Gauge and Fuel Filler Cap: FXD and FXDC Models**

# H-D Factory Security System

## Basic Security System Operation

The security system provides security and immobilization functions. The security system will disable the starter and the ignition or EFI system. Additional functions include the ability to flash all four turn signals and sound a siren (if purchased as an option) if a theft attempt is detected.

Conditions that activate the security alarm when the system is armed include:

- Detecting vehicle movement.
- Detecting tampering of the ignition switch circuit.
- Detecting tampering of the security lamp circuit.
- Detecting that a battery disconnect has occurred while armed. (Activates siren only if P&A siren is installed.)

## Security System Options

The following configurations are available on the security system unit:

- Alarm sensitivity.
- Auto-arming feature.
- Storage mode.

Factory settings for the security system include:

- Medium motion alarm sensitivity.
- Key fob arming mode.
- Storage mode set to 10 days.

### FCC Regulations

This device complies with Part 15 of the FCC Rules and with RSS-210 of Industry Canada rules.

Operation is subject to the following conditions:

- This device may not cause harmful interference.
- This device must accept any interference received, including interference that may cause undesired operation.

### Arming The System

There are two methods to arm the security system:

- **Remote-arming:** See Key Fob. Owners may enable security alarm and immobilization functions with a remote, personally carried transmitter. This transmitter is referred to as a key fob within this document.
- **Auto-arming:** Arms the security system within 30 seconds after IGNITION switch is turned OFF. To enable auto-arming see Using Auto-arming below.

*NOTES:*

- *The vehicle cannot be armed with the engine running or the ignition ON.*
- *International vehicles are configured for auto-arming. This cannot be changed.*

## Using Key Fob

See Key Fob. Hold down the key fob button until the system responds with two turn signal flashes and two chirps from optional siren. To assign a key fob to a motorcycle, refer to Key Fob Assignment.

## Using Auto-arming

Auto-arming causes the security system to automatically arm itself (without the use of the key fob) within 30 seconds after the ignition key is turned OFF. During this period, the security lamp stays on solid to indicate auto-arming is starting up.

The vehicle may be moved during these 30 seconds without triggering the alarm. However, any motion after that period will trigger the security alarm. Upon expiration of the auto-arming period, the turn signals flash twice, the security lamp begins to flash and the siren (if installed) chirps twice.

To set the auto-arming selection, refer to Auto-arming Configuration.

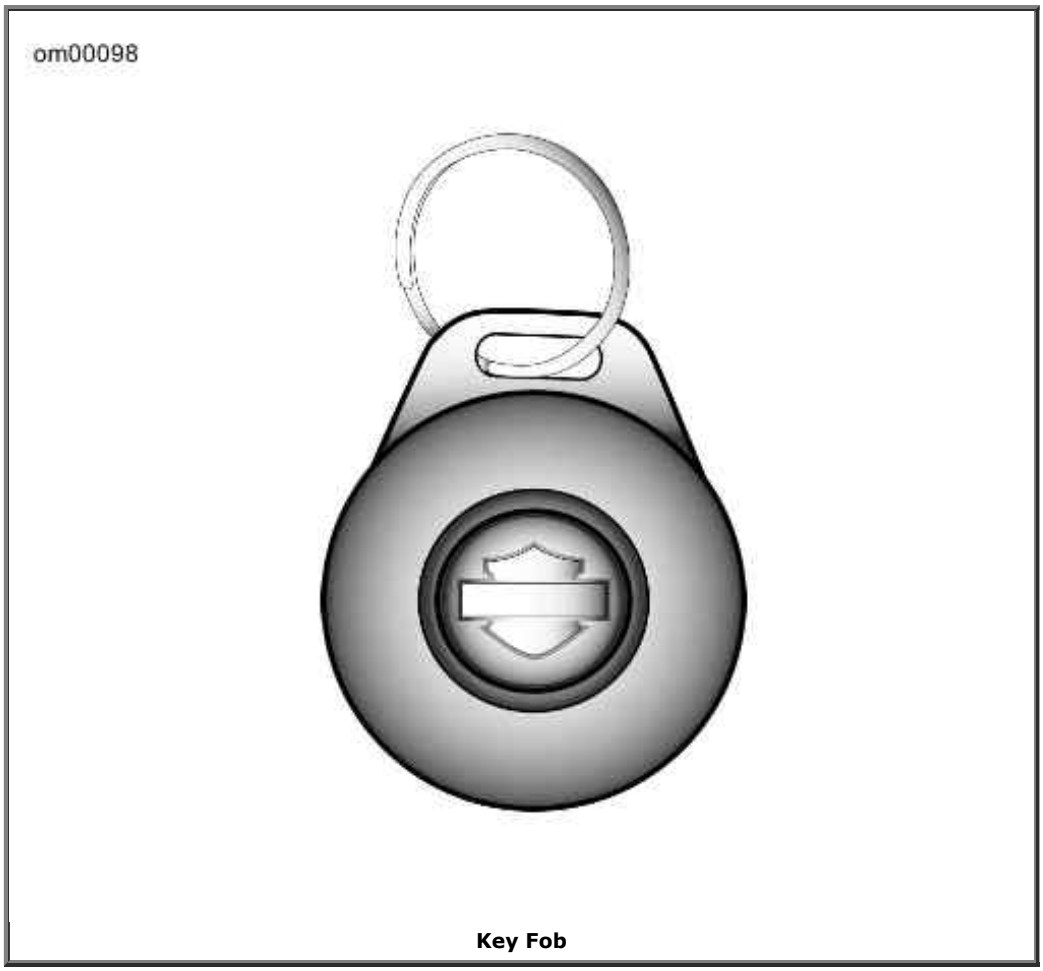


Key Fob

### Disarming The System

There are two ways to disarm the system:

- **Remote disarming:** See Key Fob. Owners may disable security alarm and immobilization functions with a remote, personally carried transmitter. This transmitter is referred to as a key fob within this document.
- **Personal code:** If a key fob is not available, the security system allows the rider to disable the security alarm and immobilization functions if the rider knows the previously entered personal code.

*NOTE:*

*Do not forget to enter a personal code for security system vehicles. If a code is not assigned and the key fob is lost or damaged while the vehicle is armed, the security system module must be replaced. Refer to Programming a Personal Code for personal code setup.*

## Using Key Fob

See Key Fob. Quickly press the key fob button twice. The system will respond with one turn signal flash.

*NOTES:*

- ***Disarming function may require practice.*** *The key fob button must be pressed twice within 1.5 seconds to send the disarm command. The action is very similar to double-clicking a computer mouse. Light quick taps work best; very hard or very slow taps are less likely to work.*

- *If the system is remotely disarmed (with the key fob) but the ignition key is not turned ON within 30 seconds, the system will rearm itself when auto-arming is enabled.*

## Using Personal Code

Enter the five digit personal code you have chosen using the left and right turn signal switches. For complete procedure refer to Entering a Personal Code to Disarm Security System. To create a personal code, refer to Programming a Personal Code.

*NOTE:*

*If you make an error while disarming the security system using the personal code, the alarm will activate for 30 seconds after the last digit is entered. After a failed attempt, the security lamp will flash once every second for 10 minutes. During this time, the vehicle will not accept any attempt to enter a personal code.*

**Entering a Personal Code to Disarm Security System**

| STEP NO. | ACTION | WAIT FOR CONFIRMATION | NOTES |
|---|---|---|---|
| *NOTE: The left turn signal switch is used for code number entry and the right turn signal is used as the "enter" key.* | | | |
| 1 | Know your 5 digit personal code | | |
| 2 | Turn **IGN** key to **ACC** | | |
| 3 | Hold **both** turn switches in until confirmation | Security lamp blinks at fast rate | |
| 4 | Enter first digit of code (**a**) by pressing **left** turn switch **a times** | | |
| 5 | Press **right** turn switch **1 time** | | Serves as enter key for first digit |
| 6 | Enter second digit of code (**b**) by pressing **left** turn switch **b times** | | |
| 7 | Press **right** turn switch **1 time** | | Serves as enter key for second digit |
| 8 | Enter third digit of code (**c**) by pressing **left** turn switch **c times** | | |
| 9 | Press **right** turn switch **1 time** | | Serves as enter key for third digit |
| 10 | Enter fourth digit of code (**d**) by pressing **left** turn switch **d times** | | |
| 11 | Press **right** turn switch **1 time** | | Serves as enter key for fourth digit |
| 12 | Enter fifth digit of code (**e**) by pressing **left** turn switch **e times** | | |
| 13 | Press **right** turn switch **1 time** | Security lamp stops blinking | System is disarmed. You may use the vehicle or program another key fob. |

## Security Status Lamp

See Security System Icon. A lamp within the speedometer face tells the rider if the system is armed or disarmed.

Refer to Security Lamp Status for an explanation of the lamp's activity.

**Security Lamp Status**

| SECURITY LAMP STATUS | MODE |
|---|---|
| Does not flash. | No security system (TSSM), security system not armed or low power mode active. |
| Flashes every second. | 10 minute time-out after failed personal code entry attempt. |
| Flashes every 2 seconds. | Security system armed. |
| Flashes 3 times a second. | Personal code entry mode. |
| Stays ON solid with ignition key ON. | If solid for more than 8 seconds after key is ON, a current trouble code is present. |

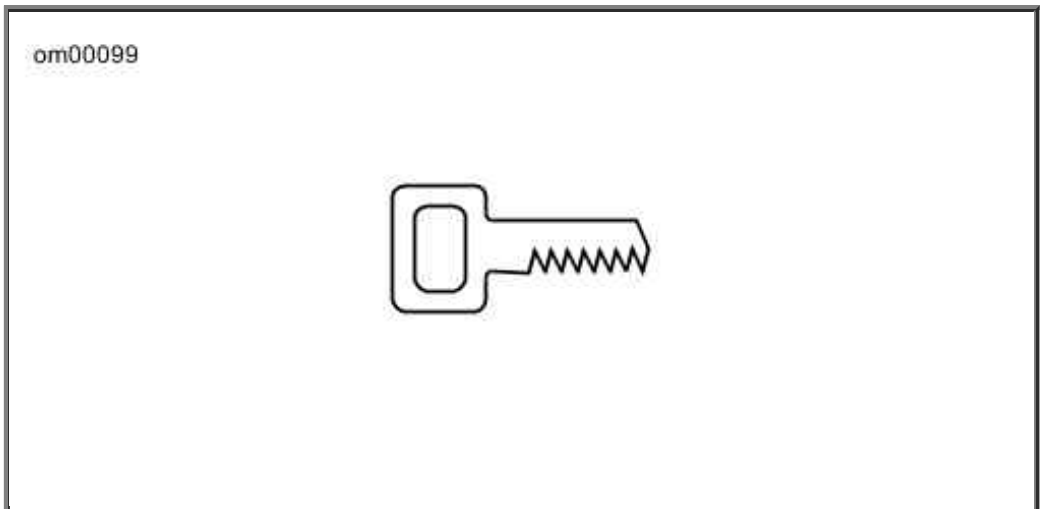


**Security System Icon**

## Transport Mode

It is possible to arm the security system without enabling the motion detector for one ignition cycle. This allows the vehicle to be moved in an immobilized state for transport.

The transport mode is used for moving the vehicle or transporting on a trailer with the security system armed and without tripping the alarm. When the vehicle is in the transport mode, the security system does not respond to motion detection.

1. To exit the transport mode, use the key fob to disarm the vehicle.
2. To enter the transport mode, refer to Transport Mode.

*NOTE:*

*Transport mode is especially useful when working on international vehicles. If it is not used, the alarm will activate under many typical service activities.*

**Transport Mode**

| STEP NO. | ACTION | WAIT FOR CONFIRMATION | NOTES |
|---|---|---|---|
| 1 | Turn **IGN** key **ON** | | |
| 2 | Press and hold **key fob** button until confirmation is received | 3 flashes turn signals & indicators | |
| 3 | Turn **IGN** key **OFF** | | |
| 4 | Press and hold **key fob** button until confirmation is received | 3 flashes turn signals & indicators | The vehicle can be moved without tripping the alarm |

### Security System Custom Setup

## Key Fob Assignment

The key fob on security system motorcycles must be set so it will operate the alarm system on the vehicle. This assignment must be completed with no pauses greater than 10 seconds between steps. Turn the ignition OFF after both key fobs have been assigned. The programming mode will also exit after 60 seconds has elapsed without detecting any key fob sign up messages or turn signal activity.

## Procedure

To assign a key fob to a motorcycle, refer to Key Fob Assignment.

Two key fobs may be assigned to the security system. The first successful attempt to program a key fob will disable all previously assigned key fobs. If a second key fob is to be programmed, it must be done in the same programming sequence as the initial key fob.

**Key Fob Assignment**

| STEP NO. | ACTION | WAIT FOR CONFIRMATION | NOTES |
|---|---|---|---|
| 1 | Turn **IGN** key **ON**-OFF-**ON**-OFF-**ON** | | |
| 2 | Press **left** turn switch **2 times** and release | 1-4 flashes turn signals & indicators depending on vehicle configuration<br><br>(See BATTERY DISCONNECTS AND CONFIGURING section) | 1 flash - Worldwide TSM, no security system<br><br>2 flashes - North American/Domestic configuration TSSM<br><br>3 flashes - Netherlands |

| | | | |
|---|---|---|---|
| | | | configuration TSSM (Dealer configurable only)<br><br>4 flashes - international configuration TSSM |
| 3 | Press **right** turn switch **1 time** and release | 1 flash turn signals & indicators | |
| 4 | Press **left** turn switch **1 time** and release | 2 flashes turn signals & indicators | |
| 5 | Press and hold **key fob** button until confirmation is received | 2 flashes turn signals & indicators | This may take 10-25 seconds |
| 6 | If you have two key fobs, press and hold button on second **key fob** until confirmation is received | 2 flashes turn signals & indicators | Optional step |
| 7 | Turn **IGN** key OFF | | |

### Personal Code

## Creating Code for the First Time

The personal code consists of five digits entered using the left and right turn signal switches. Each digit can be any number from 1-9. The personal code is intended to be used to disarm the vehicle in case the key fob is not functioning.

Record your personal code on the card(s) provided in the rear of the Owner's Manual. Carry one for reference in your wallet when riding.

To set a personal code on a motorcycle with no code previously installed, refer to Programming a Personal Code. The procedure listed uses 3-1-3-1-3 as the sample personal code.

*NOTE:*

*For better security, do not use 3-1-3-1-3 as a personal code. It is shown as an example only.*

Decide what five digit code the owner would like to use. The code will be programmed using the turn signal switches and key fob. Record your personal code on the card(s) provided in the rear of the Owner's Manual. Carry one for reference in your wallet when riding.

- When programming the personal code, the security lamp flashes to provide feedback when entering each digit.
- The number of security lamp flashes corresponds to the number currently selected for a given digit. Therefore, the lamp may flash 1-9 times depending on the number entered.
- Press the left turn switch one time to increment each digit of the code.
- Quickly press the key fob button twice to advance to the next digit of the code.

*NOTE:*

*The programming mode exits upon turning the key switch to OFF or if no turn signal switch/key fob button activity occurs for 60 seconds. No data is saved for partial configuration attempts of a first time entry.*

## Modifying Existing Codes

If a code was previously entered, the lamp will flash the equivalent digit. Each additional press of the left turn switch will increment the digit.

- To advance from 5 to 6, press and release the left turn switch 1 time.
- To advance from 8 to 2, press and release the left turn switch 3 times (9-1-2).

**Programming a Personal Code**

| STEP NO. | ACTION | WAIT FOR CONFIRMATION | NOTES |
|---|---|---|---|
| *NOTE: For better security, do not use 3-1-3-1-3 as a personal code. It is shown as an example only.* | | | |
| 1 | Set **RUN/OFF** switch to **OFF** | | Verify that security lamp is **not** blinking (vehicle is disarmed) |
| 2 | Turn **IGN** key **ON**-OFF-**ON**-OFF-**ON** | | |
| 3 | Press **left** turn switch **2 times** and release | 1-4 flashes turn signals & indicators depending on vehicle configuration<br><br>(See BATTERY DISCONNECTS AND CONFIGURING section) | 1 flash - Worldwide TSSM, no security<br><br>2 flashes - North American/Domestic configuration security system<br><br>3 flashes - Netherlands configuration security system (Dealer configurable only)<br><br>4 flashes - international configuration security system |
| 4 | Quickly press **key fob** button **2 times** and release | 1 flash turn signals & indicators | Vehicle is in personal code entry mode |
| 5 | Press **left** turn switch **1 time** and release | None if no code entered<br><br>1-9 flashes if code previously entered | A lack of confirmation flashes indicates no digit is entered |
| 6 | In this example, you will press and release three times<br><br>If code previously entered, count flashes for number and then press and release **left** turn switch to advance through the digits | Security lamp flashes to indicate each digit selected<br><br>Digit will display on odometer<br><br>In this example, the lamp will flash 3 times | You've selected 3 as a number for the first digit |
| 7 | Quickly press **key fob** button **2 times** and release | 2 flashes turn signals & indicators | You've confirmed 3 as a number for the first digit and have advanced to entering |

| | | | |
|---|---|---|---|
| | | | the second digit |
| 8 | Press **left** turn switch **1 time** and release | None if no code entered<br><br>1-9 flashes if code previously entered | A lack of confirmation flashes indicates no digit is entered |
| 9 | In this example, you will perform this step one time<br><br>If code previously entered, count flashes for number and then press and release **left** turn switch to advance through the digits | Security lamp flashes to indicate each digit selected<br><br>Digit will display on odometer<br><br>In this example, the lamp will flash 1 time | You've selected 1 as a number for the second digit |
| 10 | Quickly press **key fob** button **2 times** and release | 3 flashes turn signals & indicators | You've confirmed 1 as a number for the second digit and have advanced to entering the third digit |
| 11 | Press **left** turn switch **1 time** and release | None if no code entered<br><br>1-9 flashes if code previously entered | A lack of confirmation flashes indicates no digit is entered |
| 12 | In this example, you will repeat this step three times<br><br>If code previously entered, count flashes for number and then press and release **left** turn switch to advance through the digits | Security lamp flashes to indicate each digit selected<br><br>Digit will display on odometer<br><br>In this example, the lamp will flash 3 times | You've selected 3 as a number for the third digit |
| 13 | Quickly press **key fob** button **2 times** and release | 4 flashes turn signals & indicators | You've confirmed 3 as a number for the third digit and have advanced to entering the fourth digit |
| 14 | Press **left** turn switch **1 time** and release | None if no code entered<br><br>1-9 flashes if code previously entered | A lack of confirmation flashes indicates no digit is entered |
| 15 | In this example, you will perform this step one time<br><br>If code previously entered, count flashes for number and then press and release **left** turn switch to advance through the digits | Security lamp flashes to indicate each digit selected<br><br>Digit will display on odometer<br><br>In this example, the lamp will flash 1 time | You've selected 1 as a number for the fourth digit |
| | | | |

| | | | |
|---|---|---|---|
| 16 | Quickly press **key fob** button **2 times** and release | 5 flashes turn signals & indicators | You've confirmed 1 as a number for the fourth digit and have advanced to entering the fifth digit |
| 17 | Press **left** turn switch **1 time** and release | None if no code entered<br><br>1-9 flashes if code previously entered | A lack of confirmation flashes indicates no digit is entered |
| 18 | In this example, you will repeat this step three times<br><br>If code previously entered, count flashes for number and then press and release **left** turn switch to advance through the digits | Security lamp flashes to indicate each digit selected<br><br>Digit will display on odometer<br><br>In this example, the lamp will flash 3 times | You've selected 3 as a number for the fifth digit |
| 19 | Quickly press **key fob** button **2 times** and release | 1 flashes turn signals & indicators | You've confirmed 3 as a number for the fifth digit and have gone back to the first digit |
| 20 | Turn **IGN** key OFF | | |
| 21 | Write down code in owner's manual | | |
| 22 | Arm the security system and attempt to disarm using personal code entry | | |

## Enable Auto-arming Selection

The security system allows remote arming via the key fob at anytime. However, if the system is remotely disarmed (with the key fob) but the ignition key is not turned ON within 30 seconds, the system will rearm itself when auto-arming is enabled.

To set the auto-arming selection, refer to Auto-arming Configuration.

*NOTE:*

*Auto-arming configuration cannot be altered on Netherlands vehicles.*

**Auto-arming Configuration**

| STEP NO. | ACTION | WAIT FOR CONFIRMATION | NOTES |
|---|---|---|---|
| 1 | Turn **IGN** key **ON**-OFF-**ON**-OFF-**ON** | | |
| 2 | Press **left** turn switch **2 times** and release | 1-4 flashes turn signals & indicators depending on vehicle configuration | 1 flash - Worldwide TSM, no security system<br><br>2 flashes - North |

| | | | |
|---|---|---|---|
| | | (See BATTERY DISCONNECTS AND CONFIGURING section) | American/Domestic configuration TSSM<br><br>3 flashes - Netherlands configuration TSSM (Dealer configurable only)<br><br>4 flashes - international configuration TSSM |
| 3 | Press and hold **key fob** button until confirmation is received | 1 flash turn signals & indicators | |
| 4 | Press and hold **key fob** button until confirmation is received | 2 flashes turn signals & indicators | |
| 5 | Press **left** turn switch **1 time** and release | Turn signals & indicators flash to indicate the current option selected | 1 flash - auto-arming disabled<br><br>2 flashes - auto-arming enabled |
| 6 | Press and release **left** turn switch to advance through options | Turn signals & indicators flash to indicate the new option selected | 1 flash - auto-arming disabled<br><br>2 flashes - auto-arming enabled |
| 7 | Turn **IGN** key OFF | | |

## Alarm Sensitivity

The tamper warning has four sensitivity settings:

- Extremely low.
- Low.
- Medium.
- High.

The selection chosen controls the sensitivity of the security system in regard to short disturbances of the vehicle (i.e. someone bumps into the vehicle).

To set alarm sensitivity, refer to Alarm Sensitivity Adjustment.

**Alarm Sensitivity Adjustment**

| STEP NO. | ACTION | WAIT FOR CONFIRMATION | NOTES |
|---|---|---|---|
| 1 | Turn **IGN** key **ON**-OFF-**ON**-OFF-**ON** | | |
| 2 | Press **left** turn switch **2 times** and release | 1-4 flashes turn signals & indicators depending on vehicle configuration<br><br>(See BATTERY | 1 flash - Worldwide TSM, no security system<br><br>2 flashes - North American/Domestic |

| | | | |
|---|---|---|---|
| | | DISCONNECTS AND CONFIGURING section) | configuration TSSM<br><br>3 flashes - Netherlands configuration TSSM (Dealer configurable only)<br><br>4 flashes - international configuration TSSM |
| 3 | Press and hold **key fob** button until confirmation is received | 1 flash turn signals & indicators | |
| 4 | Press **left** turn switch **1 time** and release | Turn signals & indicators flash to indicate the current option selected | 1 flash - extremely low<br><br>2 flashes - low sensitivity<br><br>3 flashes - medium sensitivity<br><br>4 flashes - high sensitivity |
| 5 | Press and release **left** turn switch to advance through options | Turn signals & indicators flash to indicate the new option selected | 1 flash - extremely low<br><br>2 flashes - low sensitivity<br><br>3 flashes - medium sensitivity<br><br>4 flashes - high sensitivity |
| 6 | Turn **IGN** key OFF | | |

## Storage Mode Configuration

The security system has a special mode for long term storage. This mode prevents the security system from discharging the battery after a period of days without any ignition key switch activity. Refer to Storage Mode Options.

- If the security system is set to infinite, the system will not go into storage mode. In this case, the customer must use a trickle charger to keep the battery from discharging after 60 days of storage.
- Vehicles will enter storage mode whether the security system is armed or disarmed.

In storage mode, all alarm functions are suspended and the receiver is shut down and will not respond to the key fob. The vehicle is immobilized because the starter motor and Ignition/EFI controllers are disabled. When the storage mode is entered, the security lamp stops flashing to conserve power.

To wake up the security system from storage mode, the ignition key must be turned ON. This will trigger the alarm if the system was previously armed. You must use the key fob or personal code to disarm the system and stop the alarm.

If the ignition is switched from ON-OFF quickly, then the security system will wake-up without activating the alarm.

To set the storage mode preferences, refer to Storage Mode Configuration.

**Storage Mode Options**

| FLASHES | TIME |
|---|---|
| 1 flash | 10 days (factory settings) |
| 2 flashes | 20 days |
| 3 flashes | 60 days |
| 4 flashes | Infinite |

**Storage Mode Configuration**

| STEP NO. | ACTION | WAIT FOR CONFIRMATION | NOTES |
|---|---|---|---|
| 1 | Turn **IGN** key **ON**-OFF-**ON**-OFF-**ON** | | |
| 2 | Press **left** turn switch **2 times** and release | 1-4 flashes turn signals & indicators depending on vehicle configuration<br><br>(See BATTERY DISCONNECTS AND CONFIGURING section) | 1 flash - Worldwide TSM, no security system<br><br>2 flashes - North American/Domestic configuration TSSM<br><br>3 flashes - Netherlands configuration TSSM (Dealer configurable only)<br><br>4 flashes - international configuration TSSM |
| 3 | Press and hold **key fob** button until confirmation is received | 1 flash turn signals & indicators | |
| 4 | Release and then hold **key fob** button until confirmation is received | 2 flashes turn signals & indicators | |
| 5 | Release and then hold **key fob** button until confirmation is received | 3 flashes turn signals & indicators | |
| 6 | Press **left** turn switch **1 time** and release | Turn signals & indicators flash to indicate the current option selected | See Storage Mode Options table |
| 7 | Press **left** turn switch to advance through options | Turn signals & indicators flash to indicate the new option selected | See Storage Mode Options table |
| 8 | Turn **IGN** key OFF | | |

## Security System Maintenance

# Key Fob Battery Replacement

Replace the key fob battery every 2 years.

1. See Key Fob Open Case: Front. Place a thin blade between the 2 halves of the key fob case and slowly turn to open.
2. See Key Fob Battery Replacement. Remove the old battery and discard.

   *NOTE:*

   *Dispose of old battery in accordance with local regulations.*

3. Install a new battery (Panasonic® 2032 or equivalent) with the positive (+) side down.
4. Verify the button rubber is fully seated.
5. Close the case by aligning the two halves and snap together.
6. While standing next to the motorcycle, press and hold the key fob button for 10-15 seconds until the security system responds with two turn signal flashes/siren chirps.

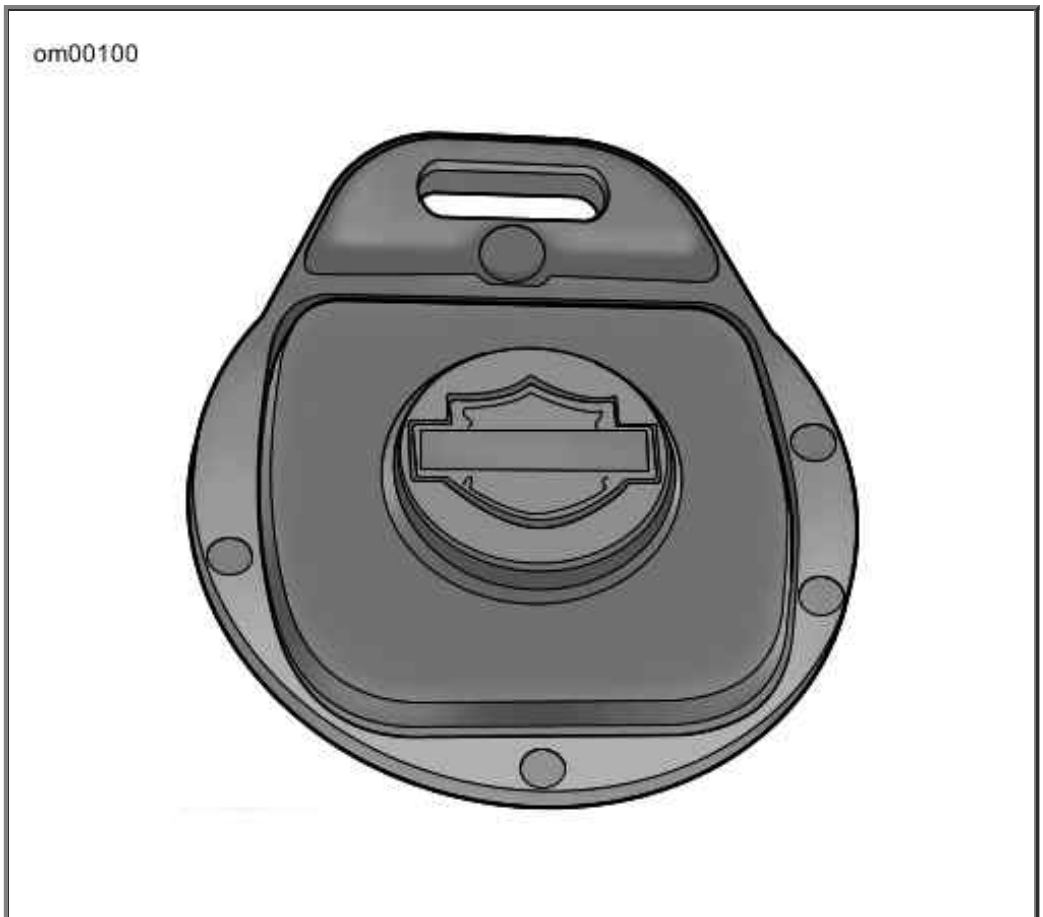


**Key Fob Open Case: Front**

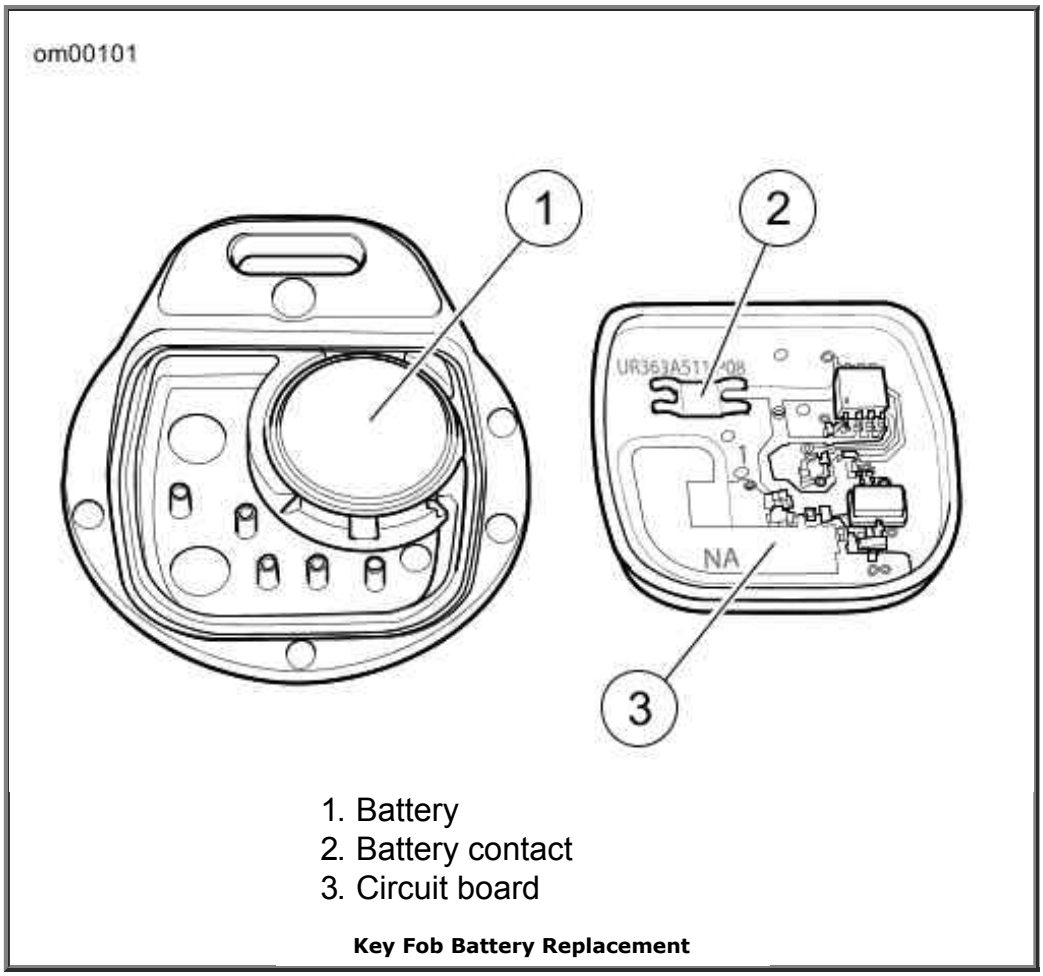


1. Battery
2. Battery contact
3. Circuit board

**Key Fob Battery Replacement**

## Disabling the System

Disarm the security system using the key fob or personal code. At this point, the security fuse may be removed or battery disconnected.

## Battery Disconnects and Configuring

After reconnecting a battery, the security system will not enter the configuration mode on the first attempt. Therefore, after all battery reconnects, the configuration sequence must be modified as follows.

1. Set run switch to **OFF**, cycle ignition key **ON**-OFF-**ON**-OFF-**ON** and press left turn signal switch twice.
2. Wait for one to three confirmation flashes of the turn signals and then set ignition key switch to **OFF**.
3. Repeat steps listed above.
4. Continue with configuration sequence listed.

## Troubleshooting the Security System

If the key fob button has been pressed numerous times while away from the vehicle, the key fob may fall out of synchronization with the security system. If this happens, the security system might fail to recognize the key fobs commands.

To solve this problem, press and hold the key fob button for 10-15 seconds until the security system responds with two turn signal flashes. After confirmation, you may resume normal key fob operation.

## Siren Diagnostics

- See Siren. If the siren is armed and the internal siren battery is dead, shorted, disconnected, or has been charging for a period longer than 24 hours, the siren will respond with three chirps on arming instead of two.
- The internal siren battery may not charge if the vehicle's battery is less than 12.5 volts.
- If the siren does not chirp two or three times on a valid arming command from the security system, the siren is either not connected, not working, or the siren wiring was opened or shorted while the siren was disarmed.
- If the siren enters the self-driven mode where it is powered from the siren internal 9 volt battery, the turn signal lamps may or may not alternately flash. If the security system activates the siren, the turn signal lamps will alternately flash. If the siren has been armed and a security event occurs, and the siren is in self-driven mode, the siren will alarm for 20 to 30 seconds and then turn off for 5 to 10 seconds. This alarm cycle will be repeated ten times if the siren is in the self-driven mode.

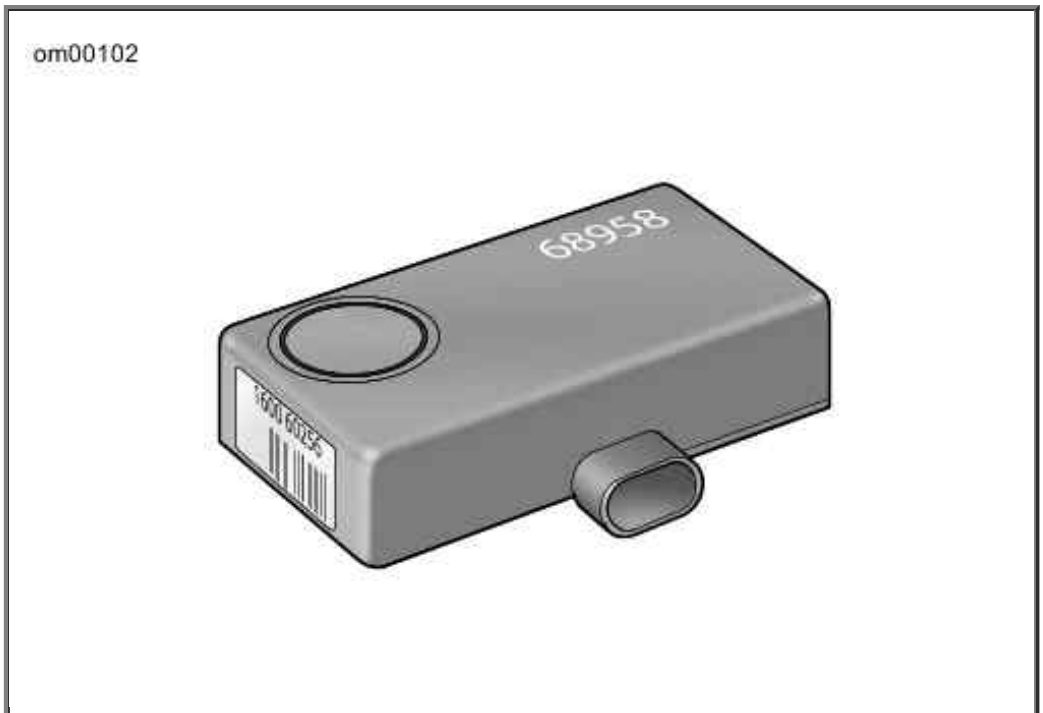

Siren

# Operation

### Operating Recommendations: Dyna Models

**CAUTION**

**Do not run the engine at extremely high RPM with clutch disengaged or transmission in neutral. Running an engine at high RPM can result in engine damage. (00177a)**

- The maximum recommended safe engine speed is 5500 RPM.
- Do not idle engine unnecessarily for more than a few minutes with motorcycle standing still.

**CAUTION**

**Do not exceed the maximum safe RPM specified below under any conditions. Exceeding the maximum safe engine RPM can result in equipment damage. (00248a)**

*NOTE:*

*The maximum recommended engine speed for Dyna model motorcycles is 5500 RPM.*

**CAUTION**

**Air-cooled engines require air movement over the cylinders and heads to maintain proper operating temperature. Extended periods of idling or parade duty can overheat the engine, resulting in serious engine damage. (00178a)**

An engine running long distances at high speed must be given closer than ordinary attention to avoid overheating and possible engine damage.

This applies particularly to a motorcycle equipped with windshield and fairing.

*NOTE:*

*Have the engine checked regularly and keep it well tuned.*

**⚠WARNING**

**When riding on wet roads, brake efficiency and traction are greatly reduced. Failure to use care when braking, accelerating or turning on wet roads can cause loss of control, which could result in death or serious injury. (00041a)**

*NOTE:*

*When descending upon a long, steep grade, downshift and use engine compression together with intermittent application of both brakes to slow the motorcycle.*

**⚠WARNING**

**Continuous use of brake causes overheating and reduced efficiency, which could result in death or serious injury. (00042a)**

**CAUTION**

**Do not coast for long distances with the engine off. The transmission is properly lubricated only when the engine**

**is running. Coasting long distances can result in transmission damage. (00180a)**

**⚠WARNING**

**Do not tow a disabled motorcycle. Towing can adversely affect stability and handling, which could result in death or serious injury. (00017a)**

### Break-in Riding Rules: Six Speed

## The First 500 Miles (800 Kilometers)

The sound design, quality materials and workmanship that are built into your new Harley-Davidson will give you optimum performance right from the start.

To allow your engine to seat in its critical parts we recommend for the first 500 miles (800 kilometers) you observe the riding rules provided below. Adherence to these recommendations will help to assure good future durability and performance.

1. While riding the first 50 miles (80 kilometers) avoid operating at any steady engine speed for long distances. Keep the engine speed below 3000 RPM in any gear. Do not lug the engine in higher gears by running or accelerating at very low RPM.
2. Up to 500 miles (800 kilometers), avoid operating at any steady engine speed for long distances. Engine speed up to 3500 RPM in any gear is permissible.
3. Avoid fast starts at wide open throttle. Drive slowly until the engine has warmed up.
4. Avoid hard braking. New brakes need to be broken-in by moderate use for the first 200 miles (300 kilometers).

### Pre-Riding Checklist

**⚠WARNING**

**Read the CONTROLS AND INDICATORS section before riding your motorcycle. Failure to understand the operation of the motorcycle could result in death or serious injury. (00043a)**

Before riding your motorcycle at any time, make a general inspection to be sure it is in safe riding condition.

**⚠WARNING**

**Stop the engine when refueling or servicing the fuel system. Do not smoke or allow open flame or sparks near gasoline. Gasoline is extremely flammable and highly explosive, which could result in death or serious injury.**

**(00002a)**

**⚠WARNING**

**Avoid spills. Slowly remove filler cap. Do not fill above bottom of filler neck insert, leaving air space for fuel expansion. Secure filler cap after refueling. Gasoline is extremely flammable and highly explosive, which could result in death or serious injury. (00028a)**

**⚠WARNING**

**Use care when refueling. Pressurized air in fuel tank can force gasoline to escape through filler tube. Gasoline is extremely flammable and highly explosive, which could result in death or serious injury. (00029a)**

1. Verify fuel is present in tank and add fuel if required.
2. Adjust mirrors to proper riding positions.
3. Verify oil is present in oil tank.
4. Check controls to make sure they operate properly. Operate the front and rear brakes, throttle, clutch and shifter. All controls should operate freely without binding.
5. Check steering for proper operation by turning the handlebars through the full operating range. Handlebars should turn smoothly without binding.

**⚠WARNING**

**Be sure tires are properly inflated, balanced and have adequate tread. Inspect your tires regularly and see a Harley-Davidson dealer for replacements. Riding with excessively worn, unbalanced or under-inflated tires can adversely affect stability and handling, which could result in death or serious injury. (00014a)**

6. Check tire condition and pressure. Incorrect pressure will result in poor riding characteristics and can affect handling and stability. Refer to tire specifications for correct inflation pressure to use.
7. Check all electrical equipment and switches including the headlamp, stop lamp, turn signals and horn for proper operation.
8. Check for any fuel, oil or hydraulic fluid leaks.
9. Check secondary belt for wear or damage.
10. Service your motorcycle as necessary.

## Starting the Engine: EFI Models

## General

**CAUTION**

**The engine should be allowed to run slowly for 15-30 seconds. This will allow the engine to warm up and let oil reach all surfaces needing lubrication. Failure to comply can result in engine damage. (00181a)**

There are some differences between a carbureted Harley-Davidson and a fuel injected Harley-Davidson. The sequential port fuel injection system simplifies the starting procedure, compared to carbureted Harley-Davidsons.

Do not roll the throttle before starting. Rolling the throttle before starting the motorcycle is unnecessary.

There is no choke or enrichener or fuel supply valve on a fuel injected Harley-Davidson. The engine management system handles starting and running the engine at all temperatures and conditions.

## Starting

**⚠WARNING**

**Shift transmission to neutral before starting engine to prevent accidental movement, which could result in death or serious injury. (00044a)**

1. Turn ignition/headlamp key switch to IGNITION position. Do not roll the throttle.

   *NOTE:*

   *The engine lamp will light for approximately 4 seconds and you will hear the fuel pump purr for approximately 2 seconds as it operates to fill the fuel lines with gasoline.*

2. See Right Handlebar Controls. Turn the off/run switch to RUN position.

3. Press the starter button to start the motorcycle.

4. When the engine has started, you can operate your motorcycle as you normally would after raising the jiffy stand.

*NOTE:*

*If the fuel tank becomes completely dry, it may take a few seconds longer to start the motorcycle after filling the tank. It will not be necessary to take any extraordinary measures before starting the motorcycle.*

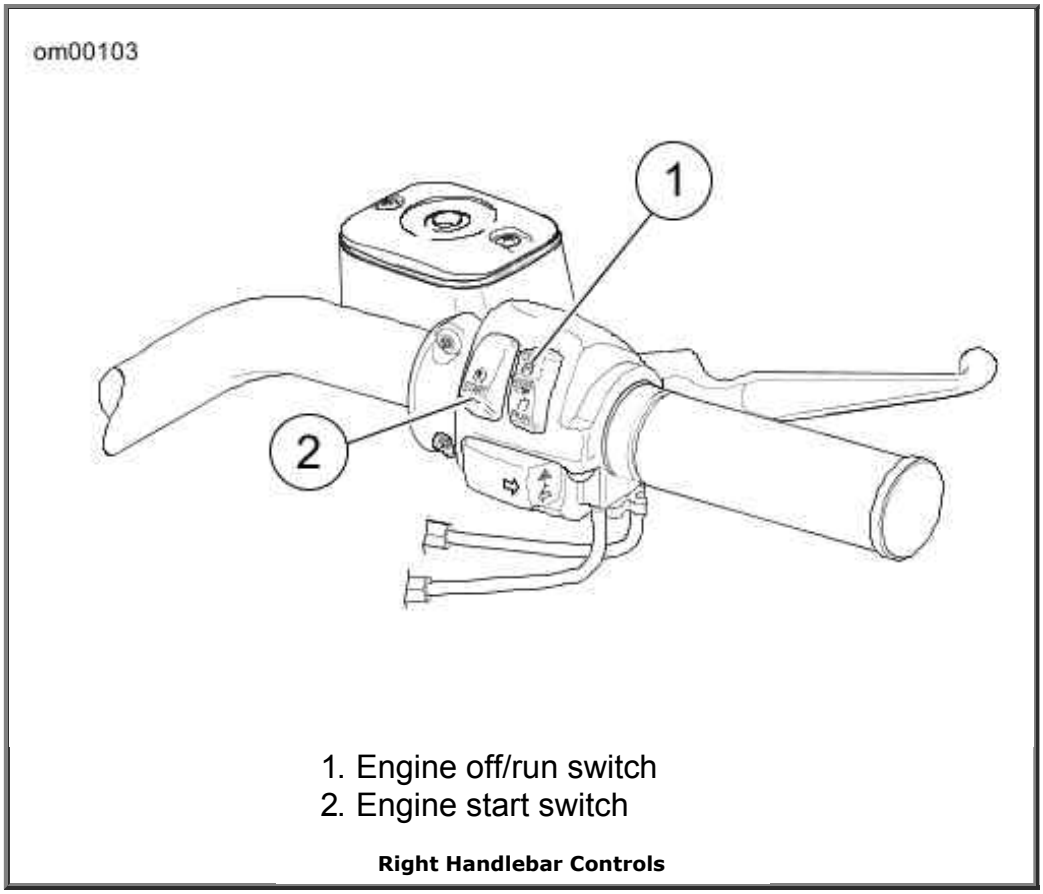


1. Engine off/run switch
2. Engine start switch

**Right Handlebar Controls**

### EFI Engine Heat Management

## Injected Twin Cam High Temperature Idle

Fuel injected Twin Cam engines use a three phase heat management system to reduce engine temperature under extreme conditions. A rider with a very hot engine may notice the affects of this three phase heat management system and incorrectly assume an idle problem exists.

- **Phase 1:** When the engine temperature sensor signals that the cylinder head has reached approximately 320° F (160° C) the ECM will gradually reduce engine idle speed until the engine temperature drops or the engine reaches 800 RPM.
- **Phase 2:** If engine temperature reaches 338° F (170° C), the ECM richens the air/fuel ratio to provide additional cooling.
- **Phase 3:** If the engine temperature reaches 356° F (180° C), fuel injector pulses are interrupted. The air drawn in and expelled helps cool the engine further. Since there is no combustion it would be perceived as a misfire. This third stage will only happen when the motorcycle is stationary.

### Stopping the Engine: EFI Models

1. Stop the engine by turning OFF the engine stop switch on right handlebar.

2. Turn OFF the ignition/headlamp key switch. If the engine should be stalled or stopped in any way, turn off the ignition/headlamp key switch at once to prevent battery discharge.

### Shifting Gears: Six Speed

## Getting Started

**CAUTION**

**The clutch must be fully disengaged before attempting a gear shift. Failure to fully disengage the clutch can result in equipment damage. (00182a)**

*NOTE:*

*Always start engine with transmission in neutral. Always start motorcycle forward motion from first gear.*

1. With motorcycle engine running and jiffy stand retracted, pull the clutch hand lever in against handlebar grip to fully disengage clutch.
2. Push the foot shift lever down to end of its travel and release. The transmission is now in first gear.
3. To start forward motion, release the clutch lever slowly to engage the clutch and at the same time, open throttle gradually.

## Upshift (Acceleration)

Refer to Upshift (Acceleration) Gear Speeds: Six Speed. Gear shift pattern is first gear down, next five gears up. Engage second gear after the motorcycle has reached at the appropriate shifting speed.

1. Close the throttle.
2. Disengage the clutch (pull clutch lever in).
3. See Upshift Pattern: Six Speed. Lift the gear shift lever up to the end of its travel and release.
4. Engage the clutch (release clutch lever) and gradually open the throttle.
5. Repeat the previous steps to engage third, fourth, fifth, and sixth gears.

*NOTES:*

- *Disengage the clutch completely before each gear change.*
- *Partially close the throttle so the engine will not drag when clutch is again engaged (clutch lever released).*

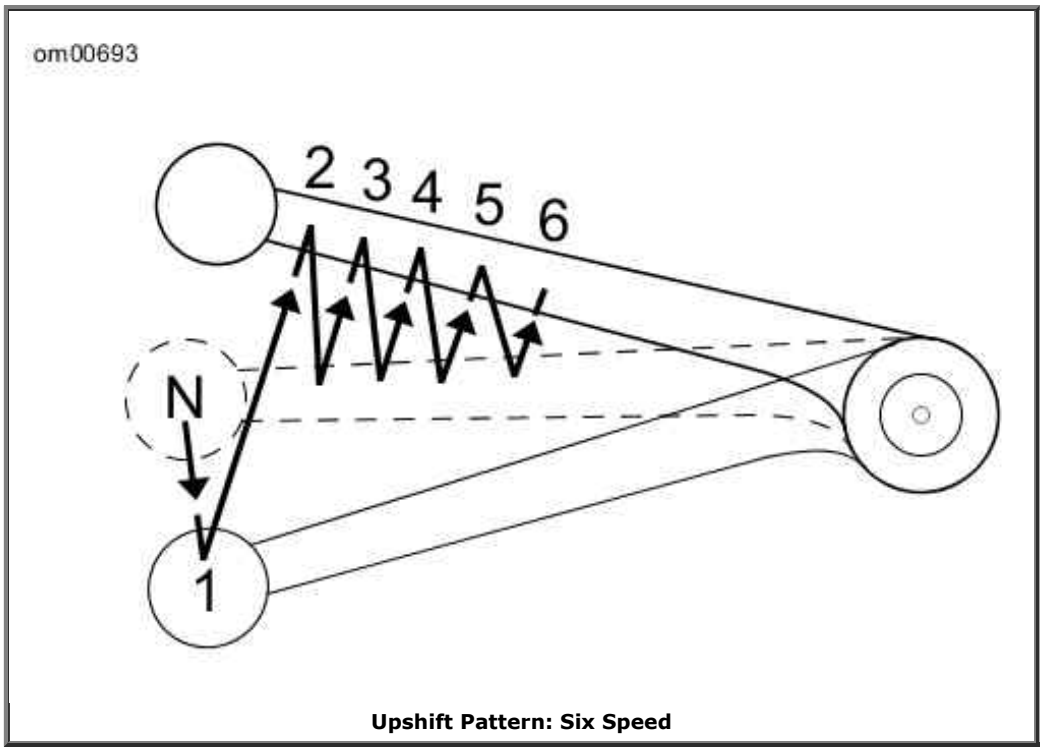

**Upshift Pattern: Six Speed**

**Upshift (Acceleration) Gear Speeds: Six Speed**

| GEAR CHANGE | MPH | KPH |
|---|---|---|
| First to second | 15 | 24.1 |
| Second to third | 25 | 40.2 |
| Third to fourth | 35 | 56.3 |
| Fourth to fifth | 45 | 72.4 |
| Fifth to sixth | 55 | 88.5 |

## Downshift (Deceleration)

**⚠WARNING**

**Do not downshift at speeds higher than those listed in the Changing Gear Speeds table. Shifting to lower gears when speed is too high can cause the rear wheel to lose traction and lead to loss of vehicle control, which could result in death or serious injury. (00045a)**

See Downshift Pattern: Six Speed. Gear shift pattern is first gear down; next five gears up. Refer to Downshift (Deceleration) Gear Speeds: Six Speed for shifting speeds.

*NOTE:*

*The shifting points shown in the tables constitute a recommendation. Vehicle owners may determine that their own individual shifting patterns may differ than those stated and are additionally appropriate for individual riding styles.*

See Downshift Pattern: Six Speed. When engine speed decreases, as in climbing a hill or

running at a reduced speed, shift to the next lower gear while partially closing the throttle so the engine accelerates as soon as the clutch lever is released.

*NOTES:*

- *Disengage the clutch completely before each gear change.*
- *Partially close the throttle so the engine will not drag when clutch is again engaged (clutch lever released).*

**CAUTION**

**Shift to neutral before stopping engine. Shifting mechanism can be damaged by shifting gears while engine is stopped. (00183a)**

The gear shifter mechanism permits shifting the transmission to neutral from either first or second gear.

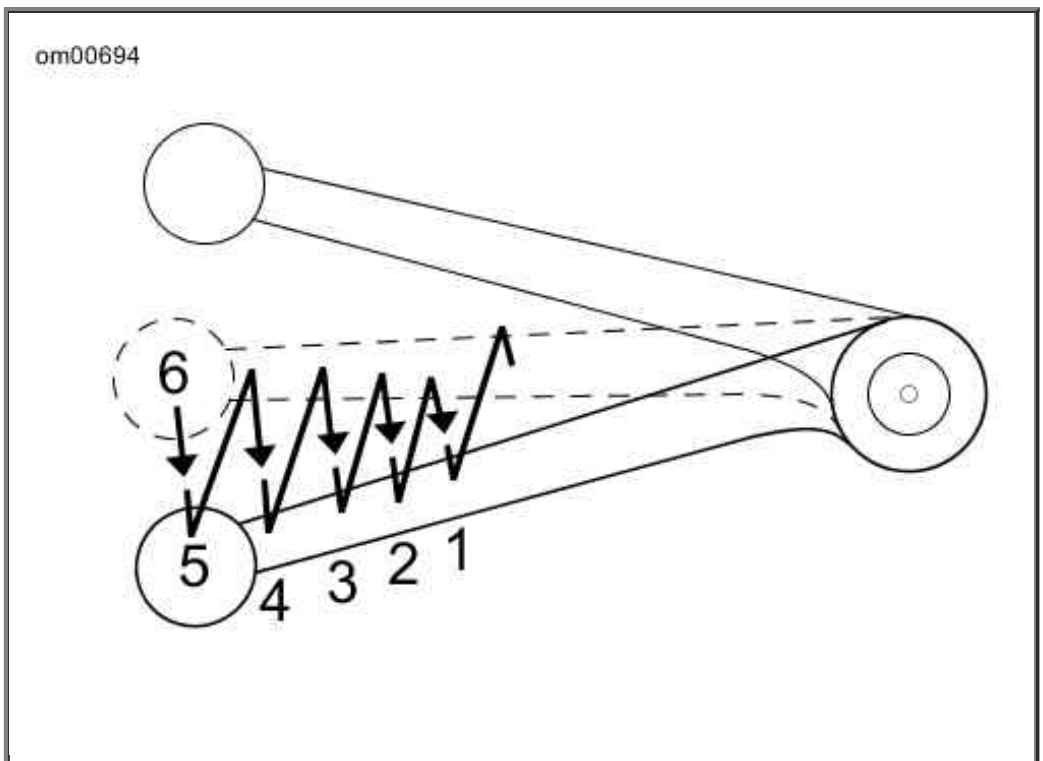


**Downshift Pattern: Six Speed**

**Downshift (Deceleration) Gear Speeds: Six Speed**

| GEAR CHANGE | MPH | KPH |
|---|---|---|
| Sixth to fifth | 50 | 80.5 |
| Fifth to fourth | 40 | 64.4 |
| Fourth to third | 30 | 48.3 |
| Third to second | 20 | 32.2 |
| Second to first | 10 | 16.1 |

## Maintenance and Lubrication

## Safe Operating Maintenance

**⚠WARNING**

**Perform the service and maintenance operations as indicated in the regular service interval table. Lack of regular maintenance at the recommended intervals can affect the safe operation of your motorcycle, which could result in death or serious injury. (00010a)**

Good maintenance creates a safe motorcycle. A careful check of certain equipment must be made after periods of storage. Also, frequently inspect the motorcycle between the regular service intervals to determine if additional maintenance is necessary.

Check the following items:

1. Tires for correct pressure, abrasions or cuts.
2. Belt and primary chain for proper tension, wear or damage.
3. Brakes, steering and throttle for responsiveness and freedom from binding.
4. Brake fluid level and condition. Hydraulic lines and fittings for leaks. Also, check brake pads and discs for wear.
5. Cables for fraying or crimping and free operation.
6. Engine oil and primary chaincase/transmission fluid levels.
7. Headlamp, tail lamp, brake lamp and turn signals for proper operation.

*NOTE:*

*Refer to the side view photographs in the front of this manual to locate the items discussed in this section.*

## Break-in Maintenance

*NOTE:*

*The performance of new motorcycle initial service is required to keep your new motorcycle warranty in force and to assure proper emissions system operation.*

Refer to Regular Service Intervals: 2006 Dyna Models. After a new motorcycle has been ridden its first 1000 miles (1600 kilometers), it should be taken to the dealer from whom it was purchased for initial service operations.

## Engine Lubrication

**CAUTION**

**Do not switch lubricant brands indiscriminately because some lubricants interact chemically when mixed. Use of inferior lubricants can damage the engine. (00184a)**

Engine oil is a major factor in the performance and service life of the engine. Always use the proper grade of oil for the lowest temperature expected before the next scheduled oil change. Refer to Recommended Engine Oils. Your authorized dealer has the proper oil to suit your requirements.

If it is necessary to add oil and Harley-Davidson oil is not available, use an oil certified for diesel engines. Acceptable diesel engine oil designations include: CF-4, CG-4, CH-4 and CI-4.

The preferred viscosities for the diesel engine oils in descending order are: 20W50, 15W40 and 10W40.

At the first opportunity, see an authorized dealer to change back to 100 percent Harley-Davidson oil.

**Recommended Engine Oils**

| H-D TYPE | VISCOSITY | H-D RATING | LOWEST AMBIENT TEMPERATURE | COLD WEATHER STARTS BELOW 50° F (10° C) |
|---|---|---|---|---|
| H-D Multi-grade | SAE 10W40 | HD 360 | Below 40° F (4° C) | Excellent |
| H-D Multi-grade | SAE 20W50 | HD 360 | Above 40° F (4° C) | Good |
| H-D Regular Heavy | SAE 50 | HD 360 | Above 60° F (16° C) | Poor |
| H-D Extra Heavy | SAE 60 | HD 360 | Above 80° F (27° C) | Poor |

### Checking Oil Level: Dyna Models

**CAUTION**

**Oil level cannot be accurately measured on a cold engine. For pre-ride inspection, with motorcycle leaning on jiffy stand on level ground, oil should register on dipstick between arrows when engine is cold. Do not add oil to bring the level to the FULL mark on a COLD engine. (00185a)**

See Dipstick Location: Dyna Models. Dipstick is located on lower right side of engine.

## Oil Level Cold Check

Perform engine oil level **COLD CHECK** as follows:

1. See Dipstick Location: Dyna Models. For preride inspection with the vehicle resting on the jiffy stand on level ground, wipe off the dipstick and insert it back into the oil pan with the cap screwed completely into the fill spout.

2. See Engine Oil Level: Dyna Models. Remove the dipstick and note the level of the oil.

Oil level should register between the two marks on the dipstick.

*NOTE:*

*If oil level is at or below the lower arrow, add only enough oil to bring the level in the middle of the two marks (1) on the dipstick.*

## Oil Level Hot Check

---

Perform engine oil level **HOT CHECK** as follows:

1. Ride motorcycle until engine is at normal operating temperature.
2. With the vehicle resting on the jiffy stand on level ground, allow engine to idle for 1-2 minutes. Turn engine off.
3. Remove and wipe off the dipstick. Insert it back with the cap screwed completely into the filler neck.
4. Refer to Recommended Engine Oils. Remove the dipstick and note the level of the oil. Add only enough oil to bring the level to the FULL mark on the dipstick. Do not overfill. Use only recommended oil specified in Engine Lubrication.
5. Start engine and carefully check for oil leaks around drain plug and oil filter.

Engine oil level should be checked only when engine is at normal operating temperature.

*NOTE:*

*The engine will require a longer warm up period in colder weather.*

**CAUTION**

**Do not allow hot oil level to fall below Add/Fill mark on dipstick. Doing so can result in equipment damage and/or equipment malfunction. (00189a)**

**CAUTION**

**Do not overfill oil tank. Doing so can result in oil carryover to the air cleaner leading to equipment damage and/or equipment malfunction. (00190a)**

- Check engine oil supply at each complete fuel refill.
- Refer to Regular Service Intervals: 2006 Dyna Models. Oil should be changed at regular intervals in normal service at warm or moderate temperatures.
- Oil change intervals should be shorter in cold weather. See Winter Lubrication.

**Dipstick Location: Dyna Models**

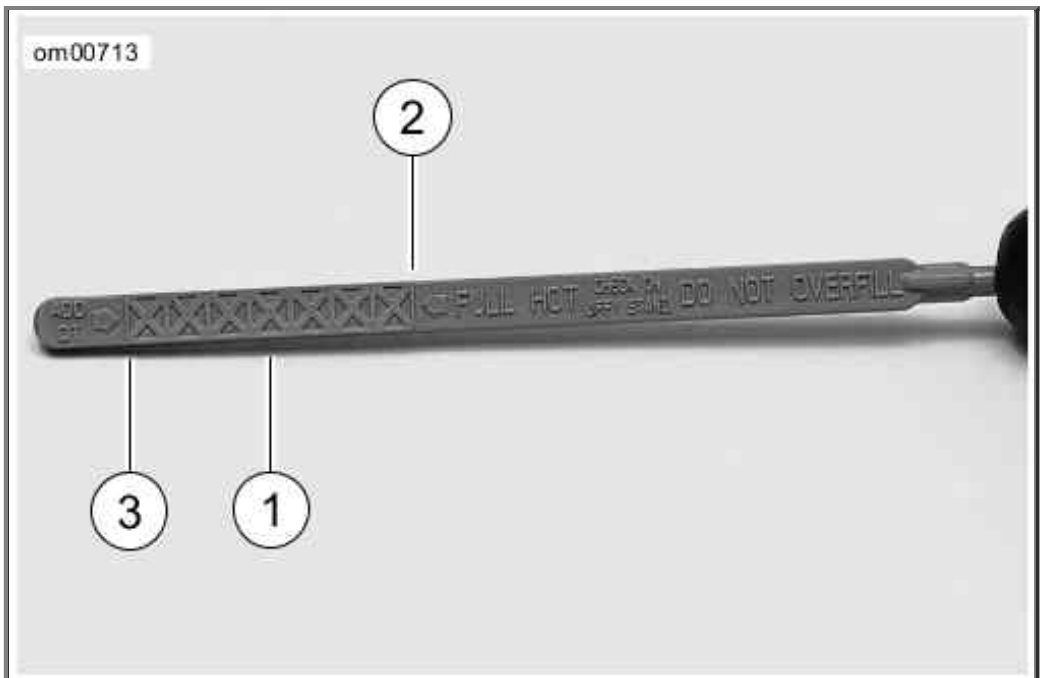


1. Cold check level
2. Hot check level (FULL)
3. ADD oil level

**Engine Oil Level: Dyna Models**

## Changing Oil and Oil Filter: Dyna Models

**CAUTION**

**Do not switch lubricant brands indiscriminately because some lubricants interact chemically when mixed. Use of inferior lubricants can damage the engine. (00184a)**

**⚠WARNING**

**Be sure that no lubricants or fluids get on tires, wheels or brakes when changing fluid. Traction can be adversely affected, which could result in loss of control of the motorcycle and death or serious injury. (00047d)**

Twin Cam 88™ equipped vehicles require the premium oil filter (Part No. 63798-99 Chrome or Part No. 63731-99 Black).

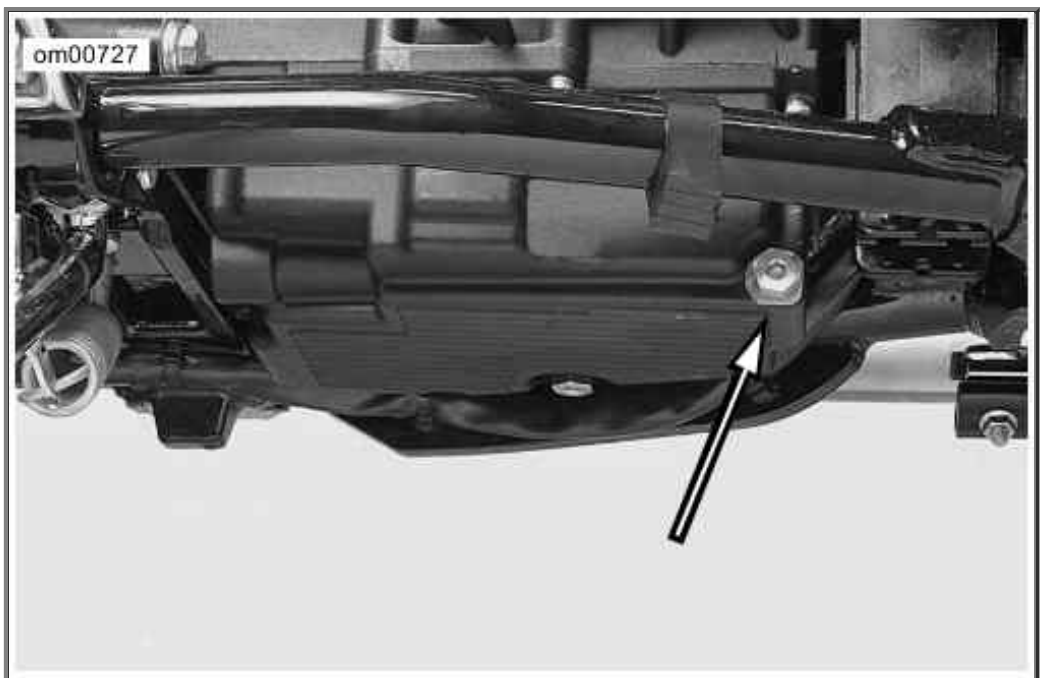


**Engine Oil Drain Plug (oil pan under transmission)**

1. Ride motorcycle until engine is warmed up to normal operating temperature.
2. See Dipstick Location: Dyna Models. Unthread the cap to remove the oil filler plug/dipstick.
3. See Engine Oil Drain Plug (oil pan under transmission). Remove the engine oil drain plug with o-ring . Allow oil to completely drain into a suitable container.

**CAUTION**

**Use Harley-Davidson OIL FILTER WRENCH for filter removal. This tool can prevent damage to crankshaft position sensor and/or sensor cable. (00192a)**

4. See Oil Filter Wrench (Part No. HD-42311). Remove the oil filter using the OIL FILTER WRENCH. Clean the oil filter mount flange of any old gasket material.

*NOTE:*

*Dispose of oil and oil filter in accordance with local regulations.*

5. See Applying Thin Oil Film. Lube the gasket on new oil filter with engine oil and install new filter. Hand tighten oil filter 1/2-3/4 turn after gasket contacts filter mounting surface.

6. See Engine Oil Drain Plug (oil pan under transmission). Install oil tank drain plug.

   a. Inspect o-ring for tears or damage. Replace if required. Wipe any foreign material from plug.

   b. Install o-ring and drain plug and tighten to 14-21 ft-lbs (19.0-28.5 Nm).

**CAUTION**

**Do not overfill oil tank. Doing so can result in oil carryover to the air cleaner leading to equipment damage and/or equipment malfunction. (00190a)**

7. Refer to Recommended Engine Oils. Fill oil tank with the correct amount of oil. Use the proper grade of oil for the lowest temperature expected before next oil change. Use 2.5 quarts (2.4 liters) of engine oil for a capacity refill.

8. Check engine oil level using **COLD CHECK** procedure.

9. Start engine and carefully check for oil leaks around drain plug and oil filter.

10. Check engine oil level using **HOT CHECK** procedure.

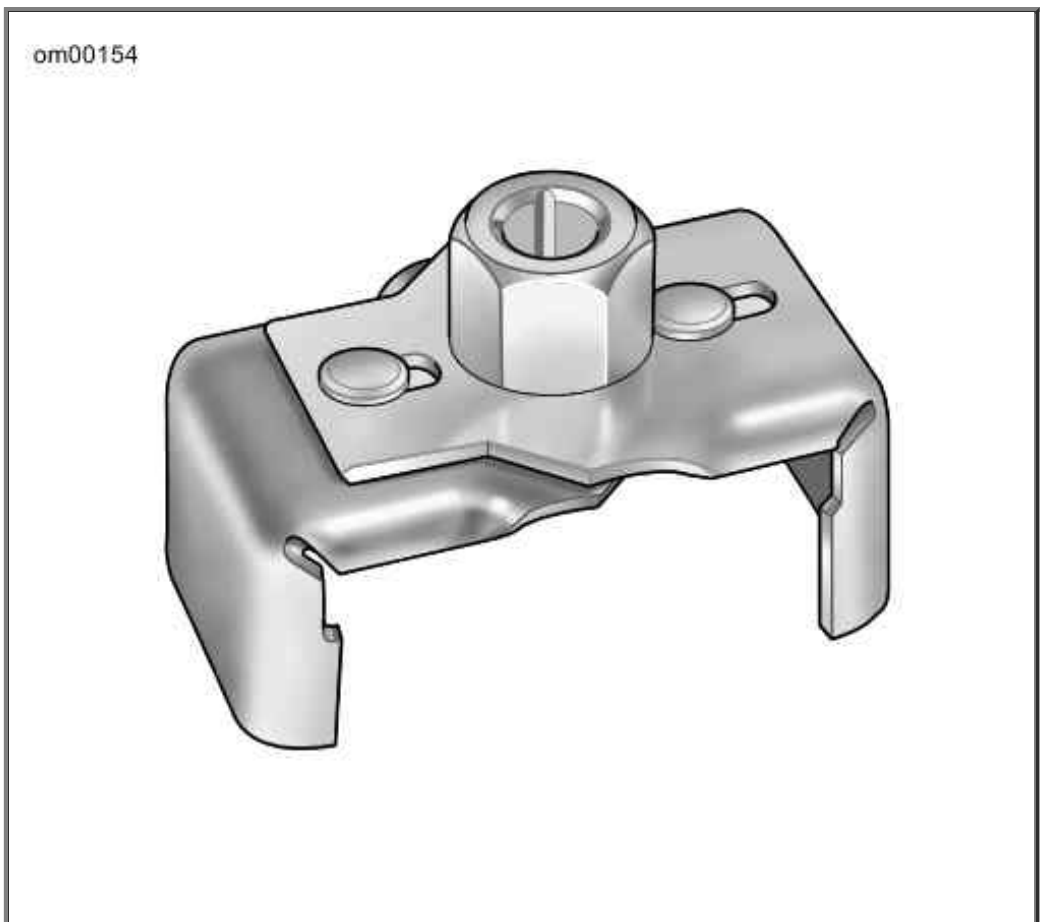


**Oil Filter Wrench (Part No. HD-42311)**

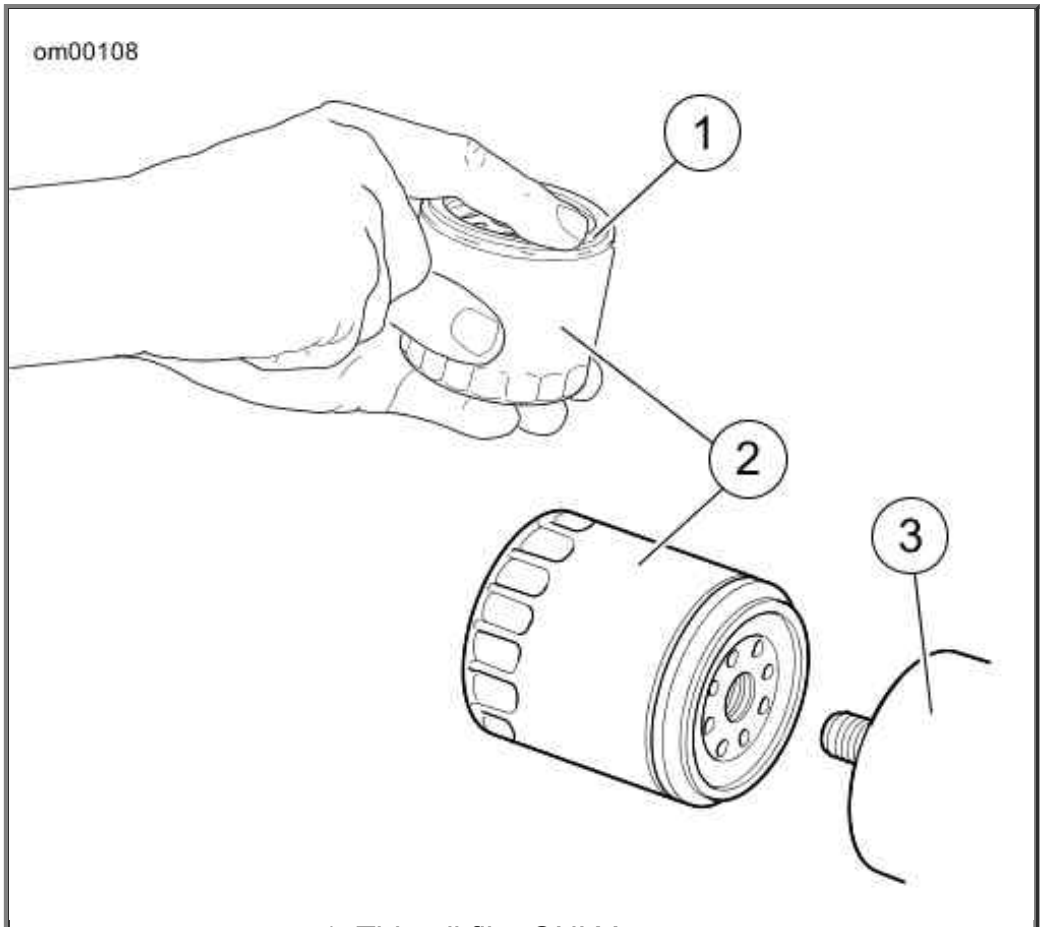


1. Thin oil film ONLY
2. Oil filter
3. Mounting plate

**Applying Thin Oil Film**

## Winter Lubrication

In colder climates, the engine oil change interval should be shorter than normal. Motorcycles used only for short runs must have the engine oil changed more frequently and have a thorough tank flush-out before **new** oil is put in. See an authorized dealer.

*NOTE:*

*The further below freezing the temperature drops, the shorter the oil change interval should be.*

Water vapor is a normal by-product of combustion in any engine. During cold weather operation, some of the water vapor condenses to liquid form on the cool metal surfaces inside the engine. In freezing weather this water will become slush or ice and, if allowed to accumulate too long, may block the oil lines and cause damage to the engine.

If the engine is run frequently and allowed to thoroughly warm up, most of this water will become vapor again and will be blown out through the crankcase breather.

If the engine is not run frequently and allowed to thoroughly warm up, this water will accumulate, mix with the engine oil and form a sludge that is harmful to the engine.

## Transmission Lubrication

The transmission lubricant level should be checked monthly.

Refer to Regular Service Intervals: 2006 Dyna Models. The transmission should be drained and refilled with fresh lubricant at proper intervals.

*NOTE:*

*When checking the transmission lubricant level, the motorcycle should be leaning on the jiffy stand. Allow a short period of time to equalize lubricant level in the transmission compartments.*

## Check Lubricant Level

---

1. Ride motorcycle until engine is warmed up to normal operating temperature.
2. When the engine reaches normal operating temperature, turn the engine off and park motorcycle on the jiffy stand.
3. See Transmission Drain Plug. Remove the threaded filler plug/dipstick by turning the plug counterclockwise and pulling outward.
4. Wipe off filler plug/dipstick. Place in filler hole and remove. (Dipstick should rest on lip of filler. Do not screw in tight. Lubricant level should be between the upper and lower ends of the oil level indicator marks on the dipstick.

**⚠WARNING**

**Be sure that no lubricants or fluids get on tires, wheels or brakes when changing fluid. Traction can be adversely affected, which could result in loss of control of the motorcycle and death or serious injury. (00047d)**

**CAUTION**

**When draining or adding lubricant, do not allow dirt, debris or other contaminants to enter the engine. (00198a)**

5. Add lubricant, if necessary. Do not overfill or leakage may occur.

   *NOTES:*
   - *When filling the transmission, use GENUINE Harley-Davidson FORMULA+ TRANSMISSION AND PRIMARY CHAINCASE LUBRICANT (Part No. 99851-05 quart).*
   - *The transmission fluid capacity is approximately 32 ounces (0.95 liters).*
   - *Inspect o-ring for tears or damage. Replace if required. Wipe any foreign material from plug.*

6. Install threaded filler plug/dipstick and tighten to 25-75 in-lbs (2.8-8.5 Nm).

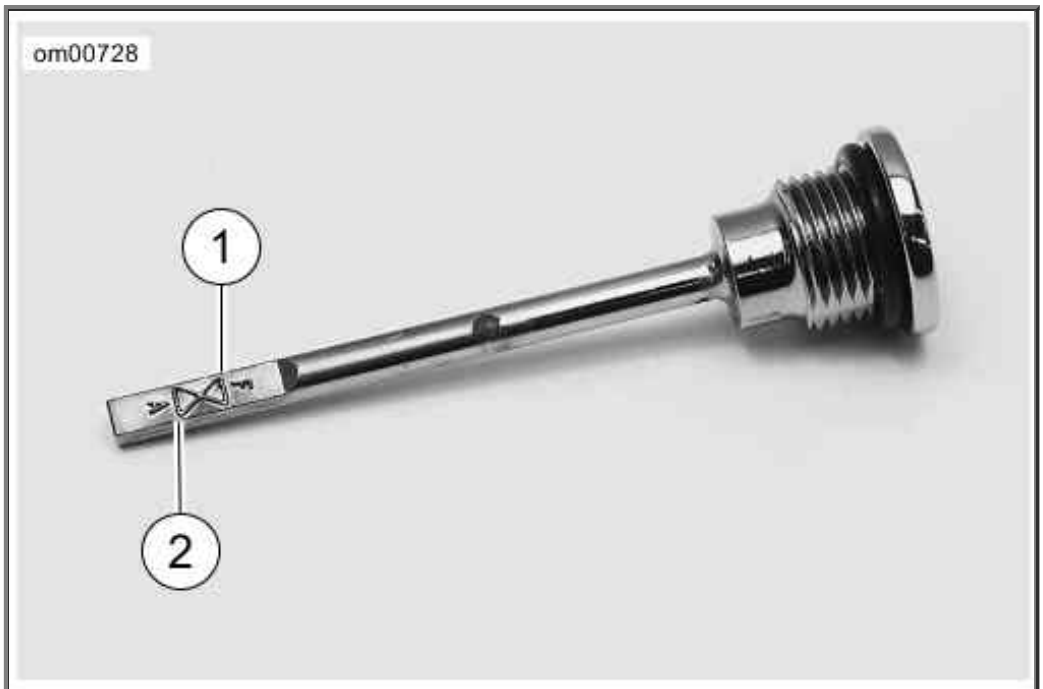


1. FULL
2. ADD

**Transmission Filler Plug/Dipstick Lubricant Level**

## Changing Transmission Fluid

1. See Transmission Filler Plug/Dipstick Lubricant Level. Remove the transmission filler plug/dipstick.
2. See Transmission Drain Plug. Remove transmission drain plug and drain lubricant into a suitable container.

**CAUTION**

**When draining or adding lubricant, do not allow dirt, debris or other contaminants to enter the engine. (00198a)**

*NOTE:*

*Do not overfill or leakage may occur. The transmission fluid capacity is approximately 32 ounces (0.95 liters).*

**⚠WARNING**

**Be sure that no lubricants or fluids get on tires, wheels or brakes when changing fluid. Traction can be adversely affected, which could result in loss of control of the motorcycle and death or serious injury. (00047d)**

*NOTE:*

*Dispose of transmission lubricant in accordance with local regulations.*

3. Inspect o-ring for tears or damage on the drain plug. Replace if required. Wipe any foreign material from plug.

4. Install drain plug and tighten to 14-21 ft-lbs (19.0-28.5 Nm).

5. Fill the transmission with 32 oz. (0.95 liters) of GENUINE Harley-Davidson FORMULA+ TRANSMISSION AND PRIMARY CHAINCASE LUBRICANT (Part No. 99851-05 quart).

6. Install threaded filler/check plug and tighten to 25-75 in-lbs (2.8-8.5 Nm).

7. Start engine and carefully check for oil leaks around drain plug.

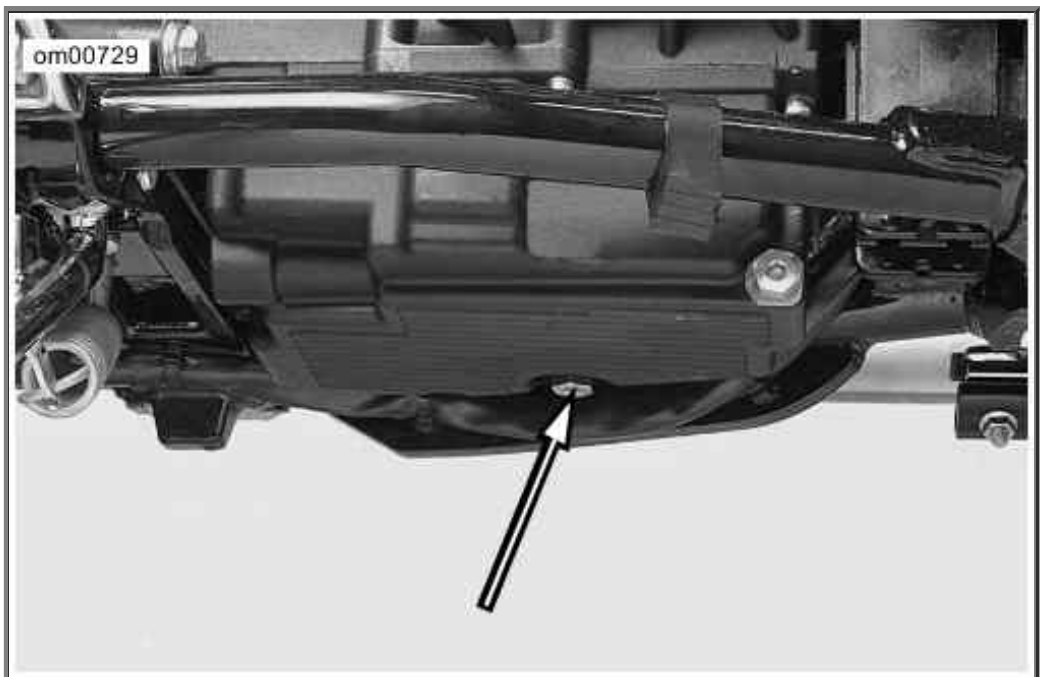


**Transmission Drain Plug**

## Primary Chaincase Lubrication

Lubrication is a major factor in the performance and service life of the clutch components. Use the appropriate Harley-Davidson chaincase lubricant for all operating temperatures.

*NOTE:*

*For model specific information regarding the primary chaincase capacity, refer to the appropriate Service Manual or see a Harley-Davidson dealer.*

## Chaincase Lubricant

Refer to Regular Service Intervals: 2006 Dyna Models. The chaincase lubricant should be drained and refilled with fresh lubricant at proper intervals.

**CAUTION**

**Do not overfill the primary chaincase with lubricant. Overfilling can cause rough clutch engagement, incomplete disengagement, clutch drag and/or difficulty in finding neutral at engine idle. (00199b)**

## Changing Chaincase Lubricant

1. Ride motorcycle until engine is warmed up to normal operating temperature.

**CAUTION**

**When draining or adding lubricant, do not allow dirt, debris or other contaminants to enter the engine. (00198a)**

2. See Clutch Cover: Dyna Models. Using a T27 TORX drive head, remove five screws (3) (with captive washers) to free clutch inspection cover (2) from primary chaincase cover.

3. See Removal/Installation of Chaincase Drain Plug. Remove magnetic drain plug at bottom of inner primary chaincase cover. Drain lubricant into suitable container.

   *NOTE:*

   *Dispose of chaincase lubricant in accordance with local regulations.*

4. Clean drain plug. If plug has accumulated a lot of debris, inspect the condition of the chaincase components.

5. Install new o-ring on drain plug.

6. Install drain plug back into inner primary chaincase cover. Tighten plug to 36-60 in-lbs (4.1-6.8 Nm).

**CAUTION**

**Do not overfill the primary chaincase with lubricant. Overfilling can cause rough clutch engagement, incomplete disengagement, clutch drag and/or difficulty in finding neutral at engine idle. (00199b)**

7. Pour 32 ounces (0.95 liter) of GENUINE Harley-Davidson FORMULA+ TRANSMISSION AND PRIMARY CHAINCASE LUBRICANT (Part No. 99851-05 quart) through the clutch inspection cover opening.

**⚠WARNING**

**Be sure that no lubricants or fluids get on tires, wheels or brakes when changing fluid. Traction can be adversely affected, which could result in loss of control of the motorcycle and death or serious injury. (00047d)**

**CAUTION**

**When draining or adding lubricant, do not allow dirt, debris or other contaminants to enter the engine. (00198a)**

*NOTE:*

*Use only GENUINE Harley-Davidson FORMULA+ TRANSMISSION AND PRIMARY CHAINCASE LUBRICANT (Part No. 99851-05 quart).*

8. Install clutch inspection cover and new gasket as follows:

    a. Thoroughly wipe all lubricant from cover mounting surface and groove in chaincase.

    b. Position gasket in groove in primary chaincase cover and press each of the nubs on gasket into the groove. The nubs will retain the seal in position.

    c. Insert screw (with captive washer) through clutch inspection cover and thread it into the top cover screw hole.

    d. Start the remaining four screws (with captive washers).

    e. Using a T27 TORX drive head, alternately tighten screws to 84-108 in-lbs (9.5-12.2 Nm).

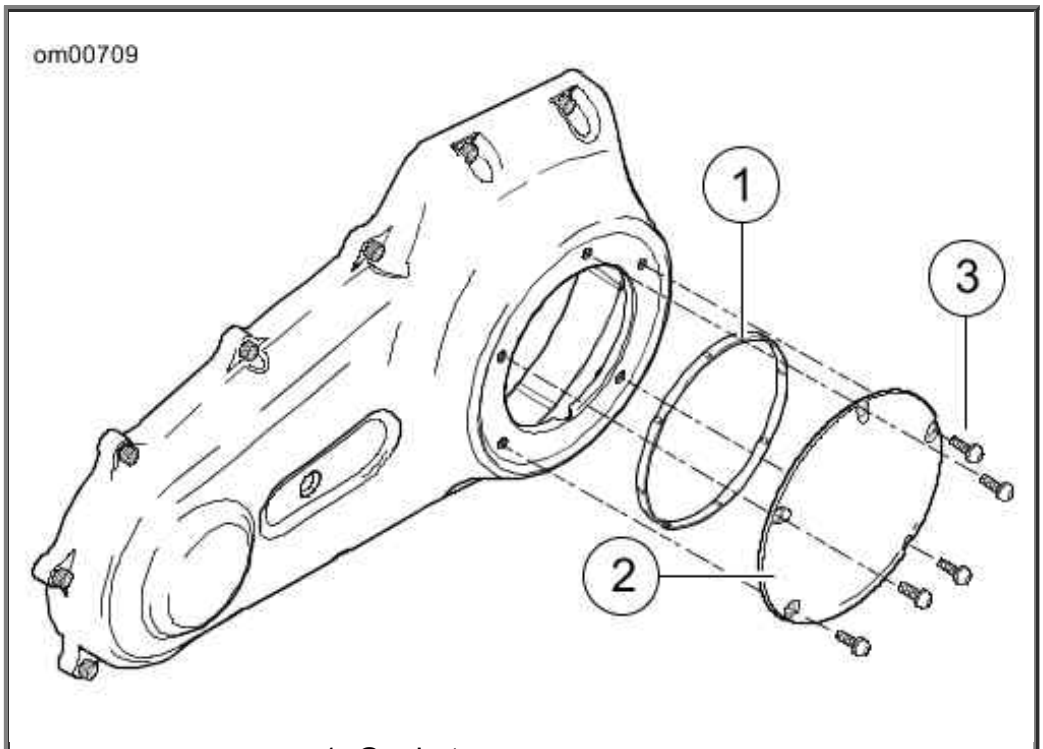


1. Gasket
2. Clutch inspection cover
3. Screws with captive washer

**Clutch Cover: Dyna Models**

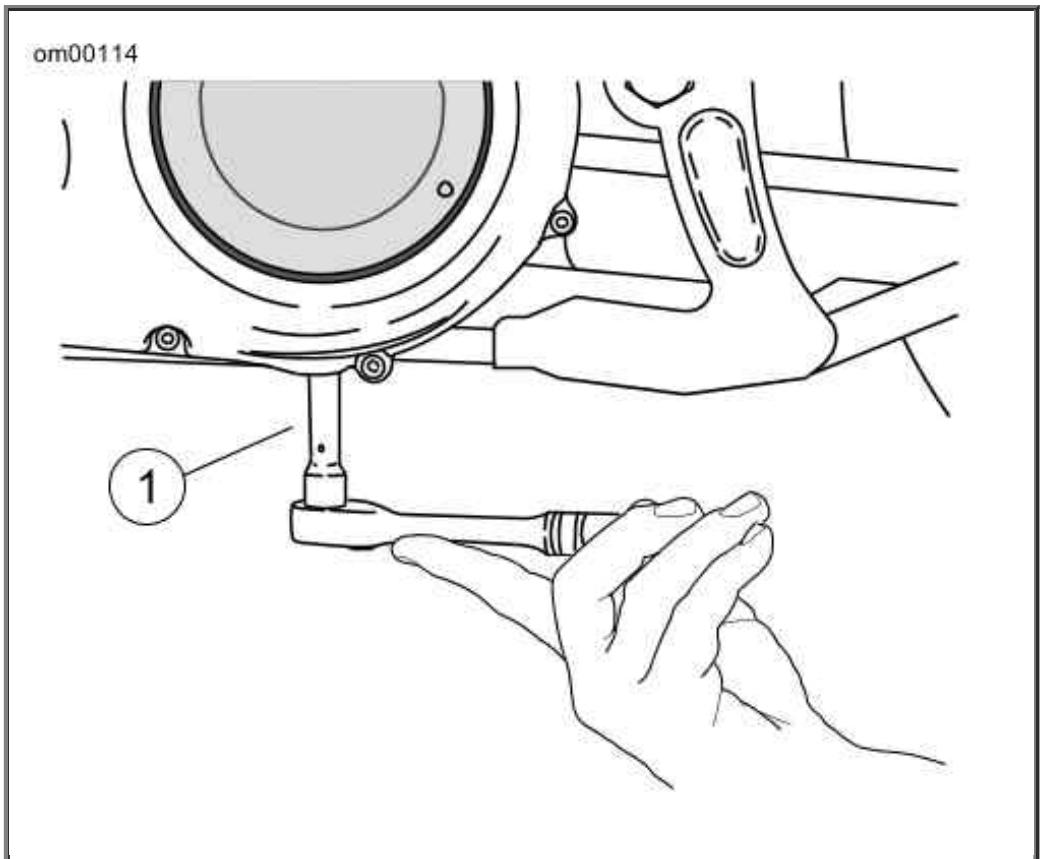


1. 36-60 in-lbs (4.1-6.8 Nm)

**Removal/Installation of Chaincase Drain Plug**

**Rear Drive Belt: Dyna Models**

## General

The inner tooth surface of the secondary belt has a thin coating of polyethylene lubricant. During initial operation, this coating will wear off as it is burnished into the belt fabric. This is a normal condition and not an indication of belt wear.

Refer to Regular Service Intervals: 2006 Dyna Models. Belt tension is set at the factory and should be checked after the first 1000 miles (1600 kilometers) and at proper intervals thereafter.

## Checking Deflection

See Belt Deflection: Dyna Models. With the rear wheel on the ground and one rider sitting on the motorcycle, use the BELT TENSION GAUGE HD-35381 to apply 10 lbs. (4.5 kg) of force at the midpoint of the bottom belt strand. Belt deflection should be 5/16-3/8 in. (7.9-9.5 mm). If belt tension adjustment is necessary, see a Harley-Davidson dealer or follow the instructions given in the applicable Service Manual.

**⚠WARNING**

**Be sure wheel and brake caliper are aligned. Riding with a misaligned wheel or brake caliper can cause the brake disc to bind and lead to loss of control, which could result in**

**death or serious injury. (00050a)**

Check rear brake caliper position on rear brake disc. Disc should run true within brake caliper.

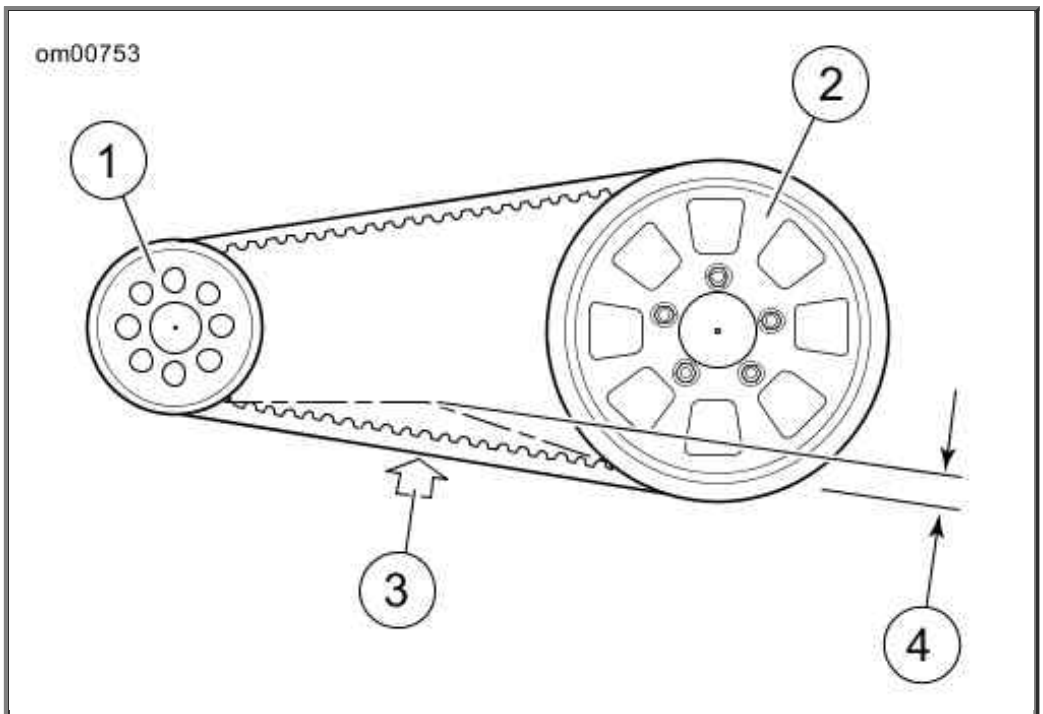


1. Transmission sprocket
2. Rear wheel sprocket
3. Force of 10 lbs (4.5 kg)
4. Deflection of 5/16-3/8 in. (7.9-9.5 mm)

**Belt Deflection: Dyna Models**

## Chassis Lubrication

Refer to Regular Service Intervals: 2006 Dyna Models for all maintenance schedules.

**CAUTION**

**Do not switch lubricant brands indiscriminately because some lubricants interact chemically when mixed. Use of inferior lubricants can damage the engine. (00184a)**

1. Use recommended special purpose grease for steering head bearings. Use a multipurpose chassis grease for other applications.
2. Remove and lubricate handlebar throttle control grip sleeve with fresh graphite at proper intervals.
3. Lubricate throttle control cables and clutch control cable at proper intervals.
4. Lubricate front brake hand lever and clutch control hand lever only if necessary.
5. Inspect rear fork pivot shaft bearings.
6. Pack the steering head bearings with fresh grease at proper intervals.

7. Lubricate the jiffy stand mechanism with LOCTITE AEROSOL ANTI-SEIZE at proper intervals.

*NOTE:*

*For model specific information regarding the chassis lubrication, refer to the appropriate Service Manual or see a Harley-Davidson dealer.*

### Oil Applications

Refer to Regular Service Intervals: 2006 Dyna Models for all control connections and parts. Vehicle should be oiled at regular intervals, particularly after washing motorcycle or driving in wet weather.

### Front Fork Oil: Dyna Models

Refer to Regular Service Intervals: 2006 Dyna Models. At the scheduled service interval, see a Harley-Davidson dealer for fork oil replacement. If the fork does not appear to be working properly or an appreciable amount of oil leakage should develop, see a Harley-Davidson dealer. If there is insufficient oil in either side of fork, the rebound action will be incorrect.

### Fuel Filter

## EFI Models Only

Fuel injected motorcycles have a fuel filter attached to the fuel pump.

*NOTE:*

*For model specific information regarding fuel filter maintenance, refer to the appropriate Service Manual or see a Harley-Davidson dealer.*

### Clutch

**CAUTION**

**The clutch control cable must be oiled and adjusted periodically to compensate for lining wear. See Service Interval Table. Failure to oil and adjust the clutch control cable can result in equipment damage. (00203a)**

The need for attention to clutch and controls will be indicated by the clutch slipping under load or dragging when released. In this situation, check the control cable adjustment first. See a Harley-Davidson dealer for proper service.

### Hydraulic Lifters

The hydraulic lifters are self-adjusting. They automatically adjust length to compensate for engine expansion and valve mechanism wear. This keeps the valve mechanism free of lash when the engine is running.

When starting an engine which has been turned off even for a few minutes, the valve mechanism may be slightly noisy until the hydraulic units completely refill with oil. If at any time the valve mechanism becomes abnormally noisy, other than for a short period immediately after engine is started, it is an indication that one or more of the hydraulic units may not be functioning properly.

Always check the oil supply in the oil tank first since normal circulation of oil through the engine is necessary for proper operation of the hydraulic units.

If there is oil in the tank, the units may not be functioning properly because of dirt in the oil supply passages leading to the lifter units. See a Harley-Davidson dealer for service.

## Front Fork Bearings

**⚠WARNING**

**Adjustments to front fork bearings should be performed by a Harley-Davidson dealer. Improperly adjusted bearings can adversely affect handling and stability, which could result in death or serious injury. (00051a)**

Refer to Regular Service Intervals: 2006 Dyna Models. Check front fork for proper bearing adjustment and lubricate bearings at proper intervals.

With motorcycle front end raised off the floor, be sure front fork turns freely without any binding or interference and that there is no appreciable front to rear fork shake indicating excessive bearing looseness. Steering head bearings should be adjusted according to Service Manual procedure, if necessary.

## Rear Fork Pivot Shaft

Refer to Regular Service Intervals: 2006 Dyna Models. Check the tightness of the rear fork pivot shaft fastener at proper intervals.

*NOTE:*

*For model specific information regarding the rear fork pivot shaft, refer to the appropriate Service Manual or see a Harley-Davidson dealer.*

## Brakes

**⚠WARNING**

**Inspect brake pads for wear at service maintenance intervals. If you ride under adverse conditions (steep hills, heavy traffic, etc.), inspect more frequently. Excessively worn brake pads can lead to brake failure, which could result in death or serious injury. (00052a)**

1. Refer to Regular Service Intervals: 2006 Dyna Models. Check brake pads and brake discs for wear at proper intervals.
2. Check the fluid level in the master cylinder reservoirs at proper intervals.

3. If level is low, clean dirt and debris from reservoir cover before removing.

**CAUTION**

**D.O.T. 4 brake fluid will damage painted and body panel surfaces it comes in contact with. Always use caution and protect surfaces from spills whenever brake work is performed. Failure to comply can result in cosmetic damage. (00239b)**

**⚠CAUTION**

**Direct contact of D.O.T. 4 brake fluid with eyes can cause irritation. Avoid eye contact. In case of eye contact flush with large amounts of water and get medical attention. Swallowing large amounts of D.O.T. 4 brake fluid can cause digestive discomfort. If swallowed, obtain medical attention. Use in well ventilated area. KEEP OUT OF REACH OF CHILDREN. (00240a)**

4. Add D.O.T. 4 HYDRAULIC BRAKE FLUID (Part No. 99953-99A) if necessary.

*NOTE:*

*Use only D.O.T. 4 HYDRAULIC BRAKE FLUID (Part No. 99953-99A) approved for brake system use and available from your Harley-Davidson dealer.*

Harley-Davidson has provided your new motorcycle with the optimum brake pad friction material available. It is selected to give the best performance possible under dry, wet and high operating temperature conditions. It exceeds all regulatory requirements currently in effect. However, during some braking conditions you may experience noise. This is normal for this friction material.

**⚠WARNING**

**Brakes are a critical safety component. Contact a Harley-Davidson dealer for brake repair or replacement. Improperly serviced brakes can adversely affect brake performance, which could result in death or serious injury. (00054a)**

See Measuring Brake Outer Pads. Visual inspection of brake pads can be made without removing the caliper. View the lower area of each caliper with a flashlight.

**⚠WARNING**

**Perform routine scheduled brake maintenance. Lack of maintenance at recommended intervals can adversely affect brake performance, which could result in death or serious injury. (00055a)**

**⚠WARNING**

**Always replace brake pads in complete sets for correct and safe brake operation. Improper brake operation could result in death or serious injury. (00111a)**

*NOTES:*

- *If the brake pad friction material is 0.04 in. (1.02 mm) thick or less, the pads must be replaced immediately.*
- *Always replace brake pads in pairs.*

The rear brake outer pad on all models can be measured from the caliper bracket side using a thin plastic 6.0 in. (152.4 mm) rule. Place the rule against the brake disc through the space alongside the caliper.

The outer surface of the brake pad backing plate should measure 0.04 in. (1.02 mm) or more away from the brake disc.

*NOTE:*

*Replace pads if brake friction material is 0.04 in. (1.02 mm) or less above the backing plate.*

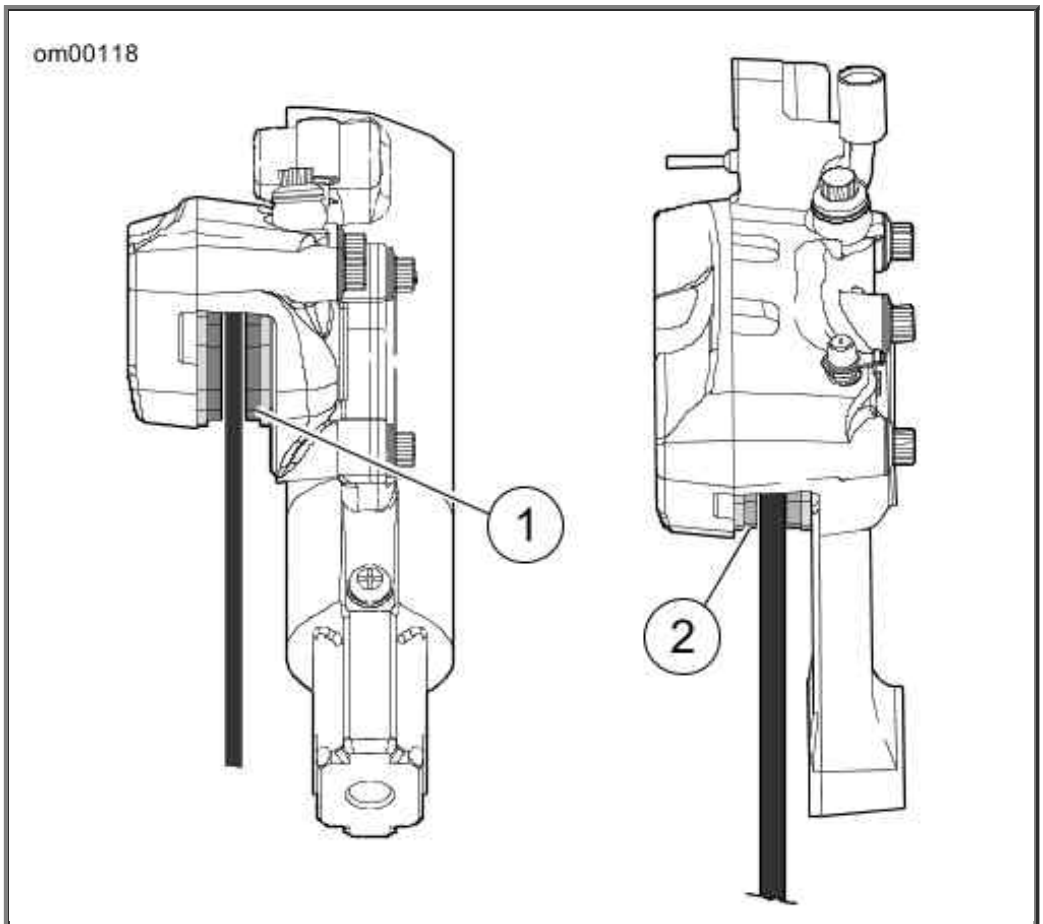


1. Front brake bottom view
2. Rear brake top view

**Measuring Brake Outer Pads**

## Tires

See Specifications: 2006 Dyna Models for tire pressures and sizes.

- Be sure to keep tires properly inflated.
- Follow tire data for correct cold tire inflation pressures.

- Check before riding when tires are cold.
- Do not over-inflate tires.

**⚠WARNING**

**Do not inflate tire beyond maximum pressure as specified on sidewall. Over inflated tires can blow out, which could result in death or serious injury. (00027a)**

**⚠WARNING**

**Match tires, tubes, air valves and caps to the correct wheel rim. Contact a Harley-Davidson dealer. Mismatching can result in damage to the tire bead, allow tire slippage on the rim or cause tire failure, which could result in death or serious injury. (00023a)**

Check inflation pressure and inspect tread for punctures, cuts, breaks, etc., at least weekly if in daily use. Check before each trip if used occasionally.

**⚠WARNING**

**Be sure tires are properly inflated, balanced and have adequate tread. Inspect your tires regularly and see a Harley-Davidson dealer for replacements. Riding with excessively worn, unbalanced or under-inflated tires can adversely affect stability and handling, which could result in death or serious injury. (00014a)**

Same as original equipment tires should be used. Other tires may not fit correctly, could adversely affect handling, and may be hazardous to use.

**⚠WARNING**

**Tires are a critical safety component. Contact a Harley-Davidson dealer for tire repair or replacement. Improper tire service can adversely affect stability and handling, which could result in death or serious injury. (00057a)**

**⚠WARNING**

**Replace punctured or damaged tires. In some cases, small punctures in the tread area may be repaired from within the demounted tire by a Harley-Davidson dealer. Speed should NOT exceed 50 mph (80 km/h) for the first 24 hours after repair, and the repaired tire should NEVER be used over 80 mph (130 km/h). Failure to follow this warning could result in death or serious injury. (00015a)**

**⚠WARNING**

**Striking an object, such as a curb, can cause internal tire damage. If an object is struck, remove and inspect both the inside and outside of the tire. A damaged tire can adversely affect stability and handling, which could result in death or serious injury. (00058a)**

### Tire Replacement

## Inspection

**⚠WARNING**

**Harley-Davidson tires are equipped with wear bars that run horizontally across the tread. When wear bars become visible and only 1/32 in. (0.8 mm) tread depth remains, replace tire immediately. Using a worn tire can adversely affect stability and handling, which could result in death or serious injury. Use only Dunlop Harley-Davidson replacement tires. (00090a)**

See Tire Sidewall. Arrows on tire sidewalls pinpoint location of wear bar indicators.

Tread wear indicator bars will appear on tire tread surfaces when 1/32 in. (0.8 mm) or less of tire tread remains. See Tread Surface. Always replace tires before the tread wear indicator bars appear.

## When To Replace Tires

New tires are needed if any of the following conditions exist:

1. Tread wear indicator bars become visible on the tread surfaces.
2. Tire cords or fabric become visible through cracked sidewalls, snags or deep cuts.
3. A bump, bulge or split in the tire.
4. Puncture, cut or other damage to the tire that cannot be repaired.

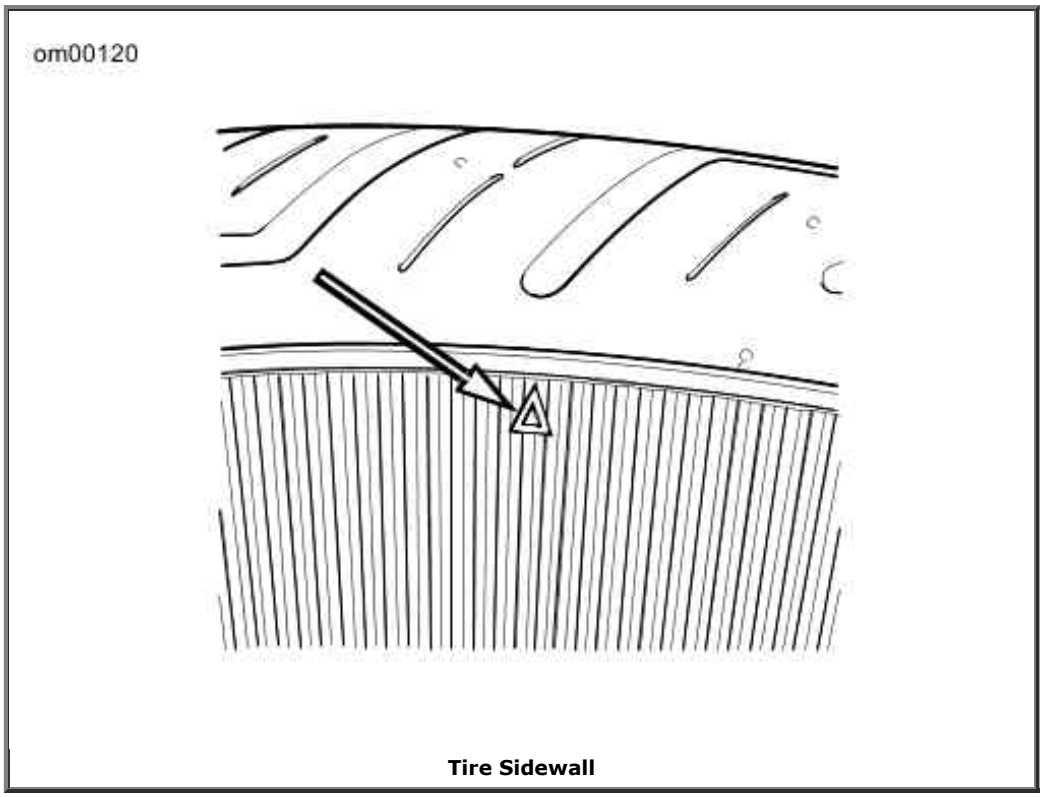


**Tire Sidewall**

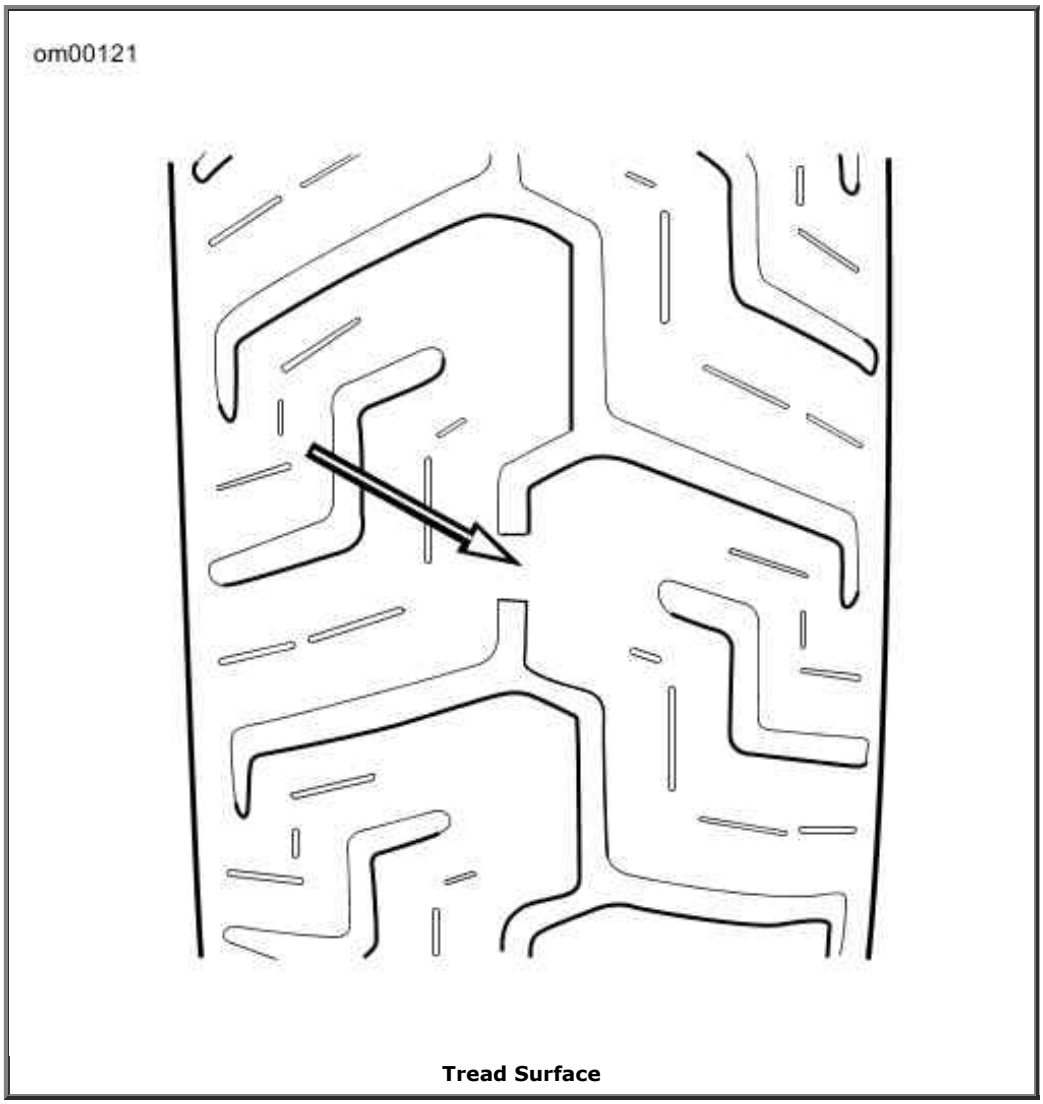


**Tread Surface**

## Vehicle Alignment

---

# Isolation Mounted Engine Models

Refer to Regular Service Intervals: 2006 Dyna Models. Vehicle alignment should be checked at regular intervals. This includes whenever the rear wheel is removed and installed or when the rear drive belt is adjusted. The stabilizer links and engine mounts should be checked for wear according to Service Manual procedures at proper intervals.

Vehicle alignment is important. Vehicle stability is adversely affected if wheels are out of alignment. Major alignment of the front and rear wheel is partially controlled by one stabilizer link at the top of the engine. See a Harley-Davidson dealer for this service.

**⚠WARNING**

**Do not change stabilizer link adjustment. Changing adjustment can adversely affect stability, which could result in death or serious injury. (00059a)**

**⚠WARNING**

**Only a Harley-Davidson dealer should perform vehicle alignment. Improper alignment can adversely affect stability and handling, which could result in death or serious injury. (00060a)**

## Shock Absorbers

Refer to Regular Service Intervals: 2006 Dyna Models. Inspect shock absorbers and rubber bushings for leaks and bushing deterioration at proper intervals.

## Spark Plugs

Refer to Regular Service Intervals: 2006 Dyna Models. Check the spark plugs at proper intervals.

**⚠CAUTION**

**Do NOT pull on any electrical wires. Pulling on electrical wires may damage the internal conductor causing high resistance, which may result in minor or moderate injury. (00168a)**

Disconnect spark plug cables from plugs by pulling on the molded connector caps. To reconnect, simply snap-on spark plug cables to tops of spark plugs.

Refer to Ignition System: 2006 Twin Cam Models before servicing spark plugs.

1. Check spark plug type. Only use those spark plugs specified for your model motorcycle.
2. Check spark plug gap against table specifications.
3. Always tighten to the proper torque. Spark plugs must be tightened to the torque specified for proper heat transfer.

*NOTE:*

*If a torque wrench is not available, tighten plugs finger tight and then tighten an additional one quarter turn with a spark plug wrench.*

## Ignition

The engine in your motorcycle has been designed specifically to achieve optimum fuel economy within exhaust emission controls. Factory programmed ignition characteristics provide maximum engine performance and driveability.

## Air Cleaner

See Air Cleaner: Twin Cam Models. The engine air cleaner is a paper/wire mesh air filter element.

Refer to Regular Service Intervals: 2006 Dyna Models. Remove air cleaner cover and inspect filter element at proper intervals. Under dusty conditions, inspect more often.

The paper/wire mesh air filter element should be washed in luke warm water with a mild detergent.

**⚠WARNING**

**Compressed air can pierce the skin and flying debris from compressed air could cause serious eye injury. Wear safety glasses when working with compressed air. Never use your hand to check for air leaks or to determine air flow rates. (00061a)**

- Allow filter to either air dry or blow it dry, from the inside, with low pressure air.
- Do not use an air cleaner filter oil on the Harley-Davidson paper/wire mesh air filter element.

**CAUTION**

**Install air filter before running engine. Failure to do so can draw debris into the engine and could result in engine damage. (00207a)**

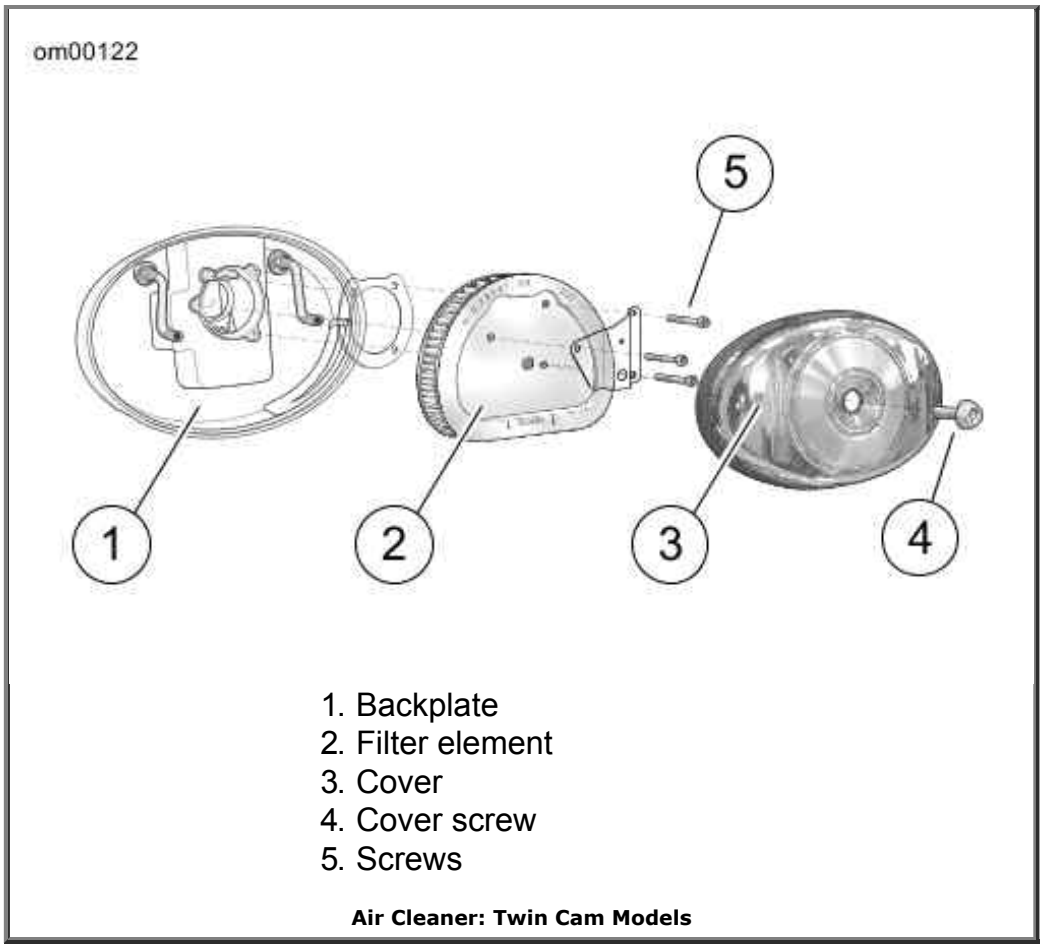


**Air Cleaner: Twin Cam Models**

## Headlamp

See Headlamp Bulbs: Dyna Models. The headlamp assembly uses a replaceable quartz halogen bulb.

*NOTE:*

*Refer to Bulb Chart: 2006 Dyna Models and see a service manual for more details.*

**CAUTION**

**When replacement is required, use only the specified sealed beam unit or bulb, available from a Harley-Davidson dealer. An improper wattage sealed beam or bulb, can cause charging system problems. (00209a)**

**CAUTION**

**Never touch the quartz bulb. Fingerprints will etch the glass and decrease bulb life. Grab the bulb with paper or a clean, dry cloth. Failure to do so could result in bulb damage. (00210a)**

**⚠WARNING**

**Handle bulb carefully and wear eye protection. Bulb contains gas under pressure, which, if not handled**

**carefully, could cause serious eye injury. (00062b)**

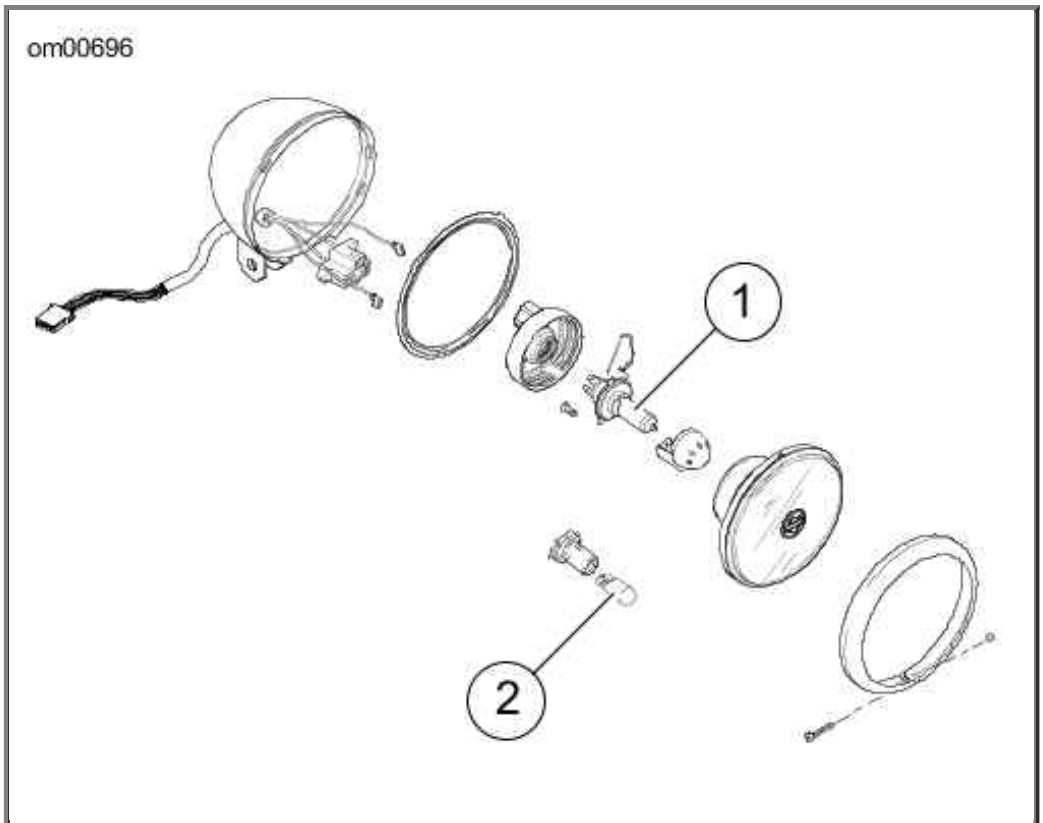


1. Headlamp bulb
2. HDI position lamp bulb

**Headlamp Bulbs: Dyna Models**

### Headlamp Alignment: Dyna Models

---

## Inspection

---

**⚠WARNING**

**The automatic-on headlamp feature provides increased visibility of the rider to other motorists. Be sure headlamp is on at all times. Poor visibility of rider to other motorists can result in death or serious injury. (00030b)**

Check headlamp for proper height and lateral alignment:

- When the new owner takes delivery of the motorcycle.
- When there is a change in load (adding luggage, etc.)

1. See Tire Pressures: 2006 Dyna Models. Verify correct front and rear tire pressure.
2. Place motorcycle on level floor (or pavement) in an area with minimum light.
3. See Checking Headlamp Alignment: Dyna Models. Position motorcycle 25 ft (7.6 m) away from a screen or wall. Measure the distance from directly below the front axle to the base of the screen/wall.

4. Draw a horizontal line 35 in. (0.9 m) above floor on screen/wall.

5. Load vehicle with rider, passenger (if normally present) and any cargo. Weight will compress vehicle suspension slightly.

6. Stand motorcycle upright with both tires resting on floor and with front wheel held in straight alignment (directly forward).

7. See Headlamp Switch High Beam Setting. Turn ignition switch ON. Set handlebar headlamp switch to HIGH beam position.

8. Check lamp beam for alignment.

    a. The main beam, which is a broad, flat pattern of light, should be centered equally above and below the horizontal line.

    b. The main beam of lamp should also be directed straight ahead. Properly adjusted headlamps project an equal area of light to right and left of center.

9. Adjust headlamp alignment if necessary.

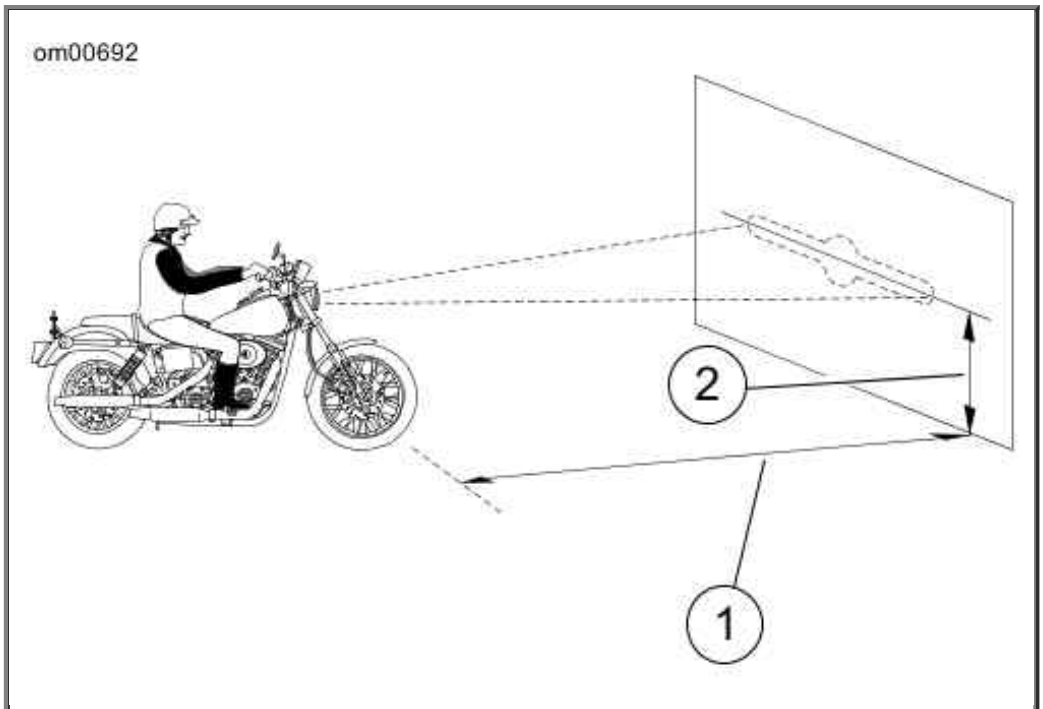


1. 25 feet (7.6 meters)
2. 35 inches (0.9 meters)

**Checking Headlamp Alignment: Dyna Models**

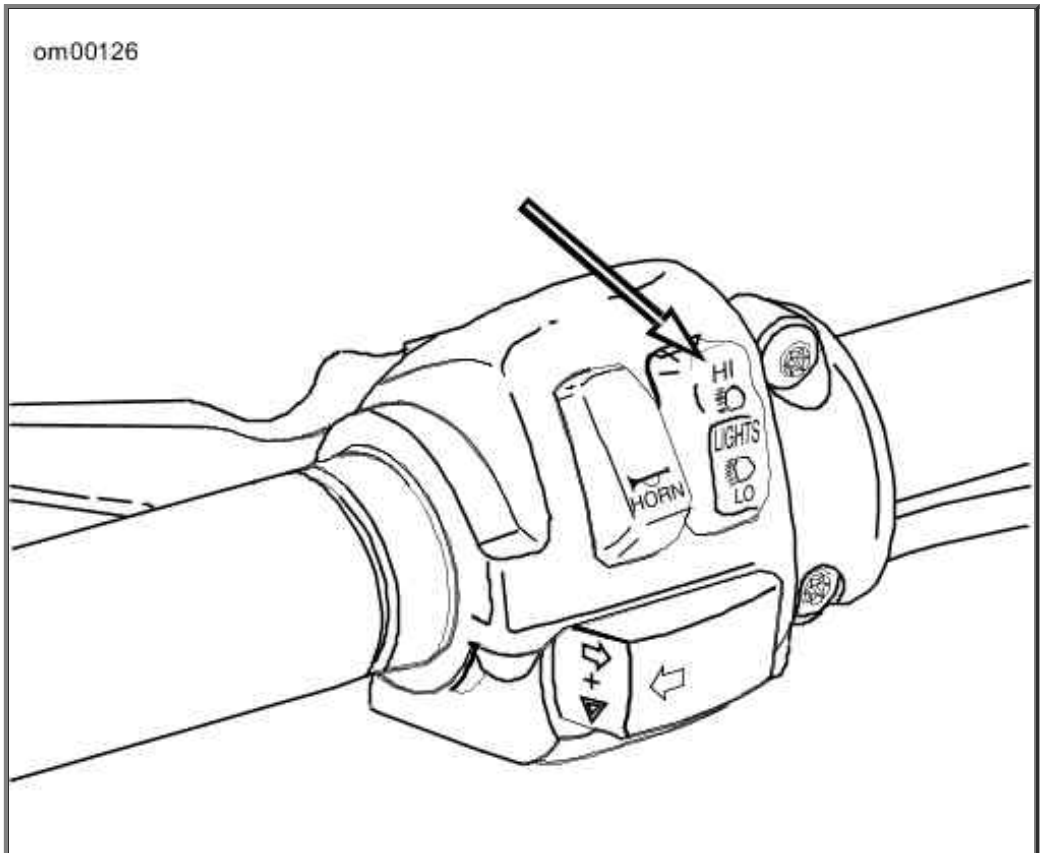

Headlamp Switch High Beam Setting

## Headlamp Alignment: Dyna Models

1. See Headlamp Adjustment: FXDWG. Loosen horizontal adjusting bolt (2) to adjust headlamp beam side to side. Tighten bolt to 25-30 ft-lbs (33.9-40.7 Nm).
2. Loosen nut on vertical adjusting bolt (1) to adjust headlamp beam up or down. Tighten bolt to 25-30 ft-lbs (33.9-40.7 Nm).

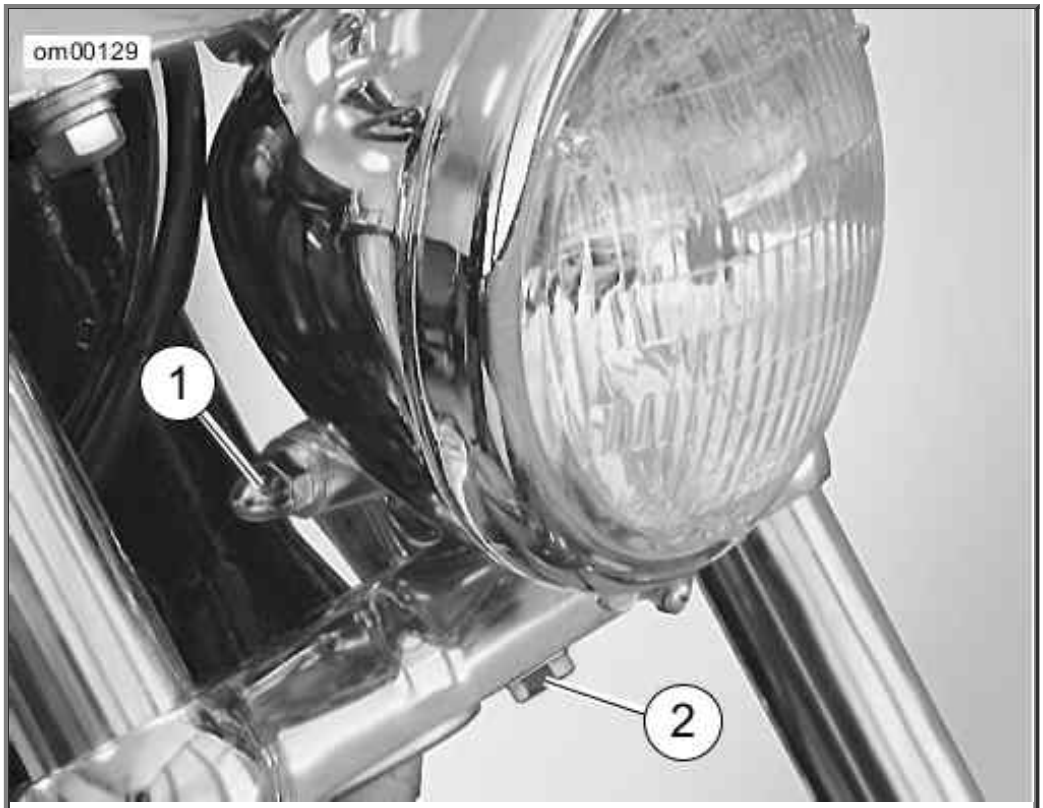


1. Vertical adjusting bolt
2. Horizontal adjusting bolt

**Headlamp Adjustment: FXDWG**

### Turn Signal Bulbs: Bullet Style

## Replacement

1. See Lens Cap Notch. To access the front or rear turn signal bulbs for replacement, locate a notch on the turn signal lens cap.
2. Insert a coin in the lens cap notch, and carefully twist until the lens cap pops out of the lamp housing.
3. Push in and twist the lamp bulb counterclockwise and pull lamp bulb out of the socket.
4. Orient index pins on **new** lamp bulb with pin guides inside bulb socket.
5. Push lamp bulb in and turn clockwise to lock in place.
6. Snap lens cap back into the lamp holder.

## Alignment

Refer to service manual for alignment procedure.

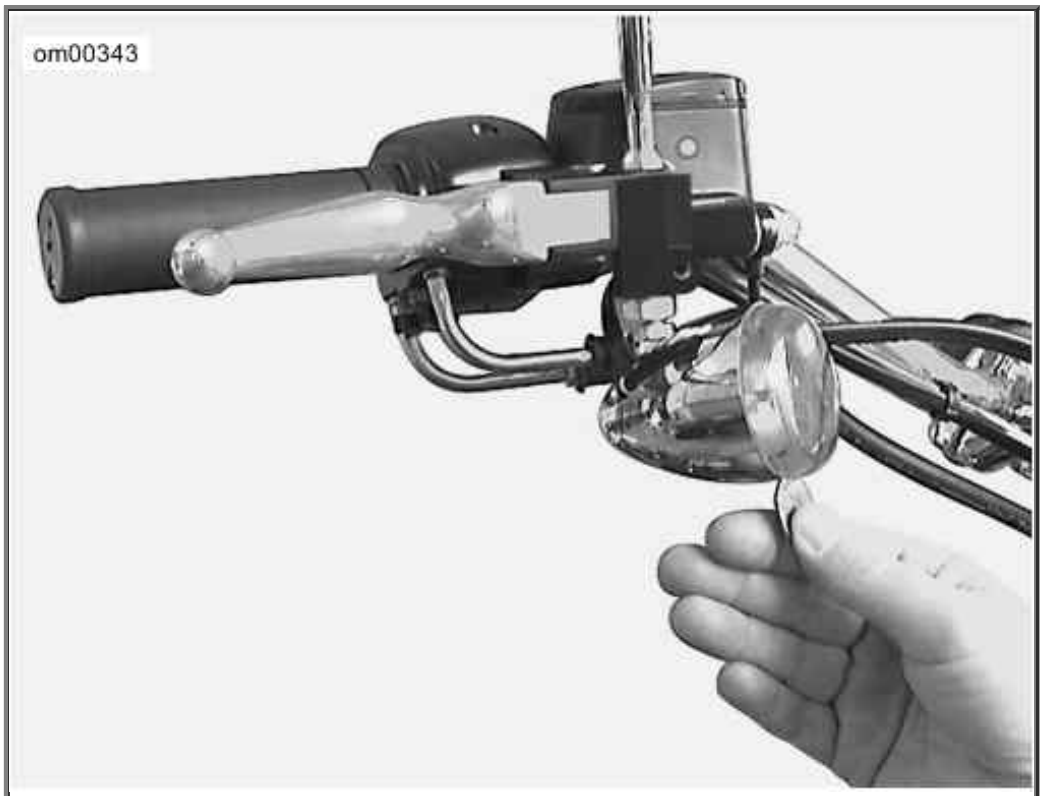


Lens Cap Notch

### Alternator/Voltage Regulator

## Charging Rate

The alternator output is controlled and changed to direct current by the voltage regulator.

- The voltage regulator increases charging rate when battery is low or lamps are lit.
- The voltage regulator decreases charging rate when battery charge is up.

**CAUTION**

**It is possible to overload your motorcycle's charging system by adding too many electrical accessories. If your combined electrical accessories operating at any one time consume more electrical current than your vehicle's charging system can produce, the electrical consumption can discharge the battery and cause vehicle electrical system damage. See a Harley-Davidson dealer for advice about the amount of current consumed by additional electrical accessories, or for necessary wiring changes. (00211b)**

A battery voltage LED in the instruments will light up when voltage is either too low or too high.

*NOTES:*

- *This unit requires no interval attention. If any electrical system trouble is experienced that might be traceable to the alternator or voltage regulator, the motorcycle should be taken to a Harley-Davidson dealer who has the necessary electrical testing equipment to give the required attention.*

- *For model specific information regarding the voltage regulator, refer to the appropriate Service Manual or see a Harley-Davidson dealer.*

### Battery: General

## Type

Your motorcycle uses a permanently sealed, maintenance-free, lead/calcium and sulfuric acid battery. All batteries are shipped precharged and ready to be put into service. Do not attempt to open the battery for any reason.

**Antidotes for Battery Acid**

| CONTACT | TREATMENT |
|---|---|
| External | Flush with water. |
| Internal | Drink large quantities of milk or water, followed by milk of magnesia, vegetable oil or beaten eggs. Get immediate medical attention. |
| Eyes | Flush with water. Get immediate medical attention. |

**⚠WARNING**

**Batteries contain sulfuric acid, which could cause severe burns to eyes and skin. Wear a protective face shield, rubberized gloves and protective clothing when working with batteries. KEEP BATTERIES AWAY FROM CHILDREN. (00063a)**

**⚠WARNING**

**Explosive hydrogen gas, which escapes during charging, could cause death or serious injury. Charge battery in a well-ventilated area. Keep open flames, electrical sparks and smoking materials away from battery at all times. KEEP BATTERIES AWAY FROM CHILDREN. (00065a)**

**⚠WARNING**

**Batteries, battery posts, terminals and related accessories contain lead and lead compounds, and other chemicals known to the State of California to cause cancer and birth defects or other reproductive harm. Wash hands after handling. (00019d)**

**⚠WARNING**

**Never remove warning label attached to top of battery. Failure to read and understand all precautions contained in warning, could result in death or serious injury. (00064a)**

1. Contents are corrosive
2. Wear safety glasses
3. Contents are explosive
4. Keep flames away
5. Read instructions
6. Keep away from children

**Battery Warning Label**

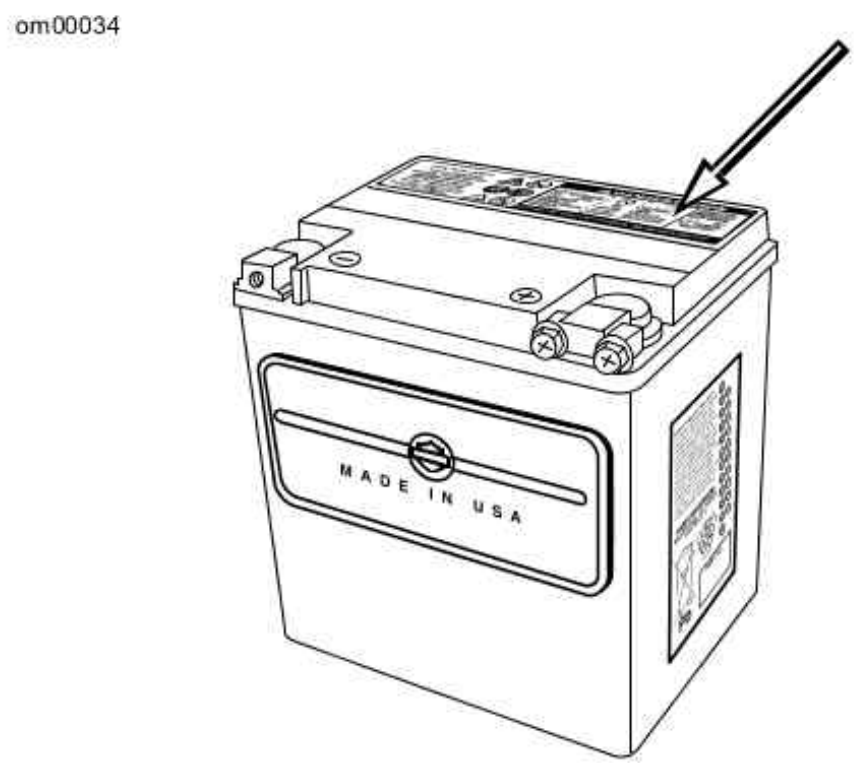


**Battery Warning Label Location**

## Voltmeter Test

Refer to Voltmeter Test. The voltmeter test provides a general indicator of battery condition. Check the voltage of the battery to verify that it is in a 100 percent fully charged condition. If the

open circuit (disconnected) voltage reading is below 12.6V, charge the battery and then re-check the voltage after the battery has set for one to two hours.

**Voltmeter Test**

| READING IN VOLTS | PERCENT OF CHARGE |
|---|---|
| 12.7 | 100 |
| 12.6 | 75 |
| 12.3 | 50 |
| 12.0 | 25 |
| 11.8 | 0 |

## Cleaning and Inspection

Battery top must be clean and dry. Dirt and electrolyte on top of the battery can cause battery to self-discharge.

1. Clean battery top with a solution of baking soda (sodium bicarbonate) and water. Use 5 teaspoons baking soda per quart or liter of water.
2. When the solution stops bubbling, rinse off the battery with clean water.
3. Clean cable connectors and battery terminals using a wire brush or fine grit sandpaper to remove any oxidation.
4. Inspect and clean the battery screws, clamps and cables. Check for breakage, loose connections and corrosion.
5. Check the battery posts for melting or damage caused by overtightening.
6. Inspect the battery for discoloration, a raised top or a warped or distorted case. This might indicate that the battery has been frozen, overheated or overcharged.
7. Inspect the battery case for cracks or leaks.

## Charging

Never charge a battery without first reviewing the instructions for the charger being used. In addition to the manufacturer's instructions, follow these general safety precautions.

Charge the battery if any of the following conditions exist:

- Vehicle lamps appear dim.
- Electric starter sounds weak.
- Battery has not been used for an extended period of time.

**⚠WARNING**

**Explosive hydrogen gas, which escapes during charging,**

**could cause death or serious injury. Charge battery in a well-ventilated area. Keep open flames, electrical sparks and smoking materials away from battery at all times. KEEP BATTERIES AWAY FROM CHILDREN. (00065a)**

**⚠WARNING**

**Batteries contain sulfuric acid, which could cause severe burns to eyes and skin. Wear a protective face shield, rubberized gloves and protective clothing when working with batteries. KEEP BATTERIES AWAY FROM CHILDREN. (00063a)**

1. Perform a voltmeter test to determine the state of charge. If battery needs to be charged, proceed to the next step.

**CAUTION**

**Remove battery from motorcycle before charging. Electrolyte leakage will damage motorcycle parts. (00213a)**

2. Remove the battery from the motorcycle. See Battery: Dyna Models.
3. Place the battery on a level surface.

**⚠WARNING**

**Unplug or turn OFF battery charger before connecting charger cables to battery. Connecting cables with charger ON can cause a spark and battery explosion, which could result in death or serious injury. (00066a)**

**⚠WARNING**

**Connect positive (+) battery cable first. If positive (+) cable should contact ground with negative (-) cable connected, the resulting sparks can cause a battery explosion, which could result in death or serious injury. (00068a)**

**⚠WARNING**

**Disconnect negative (-) battery cable first. If positive (+) cable should contact ground with negative (-) cable connected, the resulting sparks can cause a battery explosion, which could result in death or serious injury. (00049a)**

**CAUTION**

**Do not reverse the charger connections described in the following steps or the charging system of the motorcycle could be damaged. (00214a)**

*NOTES:*

- *The figures listed in the Amp-hour table assume that the battery is charging at room temperature. If warmer than room temperature, use a slightly shorter charging time. If colder, use a slightly longer charging time.*
- *The use of constant current chargers to charge sealed maintenance free batteries is not recommended. Any overcharge will cause dry-out and premature battery failure. If a constant current charger is the only type available, do not exceed the charge times listed in 19 Amp Hour Battery Charging Rates/Times and do not continue charging the battery if it gets hot. When charging, never exceed 15 volts.*

4. Connect the red battery charger lead to positive (+) terminal of the battery.

5. Connect the black battery charger lead to negative (-) terminal of the battery.

*NOTE:*

*If the battery is still in the vehicle, connect the negative lead to the chassis ground. Make sure that the ignition and all electrical accessories are turned off.*

6. Step away from the battery and turn on the charger.

**⚠WARNING**

**Unplug or turn OFF battery charger before disconnecting charger cables from battery. Disconnecting clamps with charger ON can cause a spark and battery explosion, which could result in death or serious injury. (00067a)**

7. After the battery is fully charged, turn OFF the charger and disconnect the black battery charger lead to the negative (-) terminal of the battery.

8. Disconnect the red battery charger lead to the positive (+) terminal of the battery.

9. Mark the charging date on the battery.

**19 Amp Hour Battery Charging Rates/Times**

| READING (VOLTS) | PERCENT OF CHARGE | 3 AMP CHARGER | 6 AMP CHARGER | 10 AMP CHARGER | 20 AMP CHARGER |
|---|---|---|---|---|---|
| 12.7 | 100 | - | - | - | - |
| 12.6 | 75 | 1 hour 50 minutes | 55 minutes | 30 minutes | 15 minutes |
| 12.3 | 50 | 3 hours 40 minutes | 1 hour 50 minutes | 1 hour 5 minutes | 30 minutes |
| 12.0 | 25 | 5 hours 15 minutes | 2 hours 40 minutes | 1 hours 35 minutes | 45 minutes |
| 11.8 | 0 | 7 hours | 3 hours | 2 hours | 1 hour |

| | | | | | |
|---|---|---|---|---|---|
| [illegible] | [illegible] | [illegible] | [illegible] | [illegible] | [illegible] |
| | | | 30 minutes | 5 minutes | 5 minutes |

## Storage

**CAUTION**

**Turn engine over a few times to be sure there is no oil in the crankcase and that all oil has been pumped back into the oil tank. Stop engine and re-check oil level. Failure to do so can result in engine damage. (00071a)**

**CAUTION**

**Do not allow battery to completely discharge. The electrolyte in a discharged battery will freeze. The more discharged a battery is, the more easily it can freeze and crack the battery case. (00218a)**

If the motorcycle will not be operated for several months, such as during the winter season, remove the battery from the motorcycle and fully charge.

If the motorcycle is to be stored with the battery installed, it will be necessary to connect a battery tender to maintain charge. See an authorized dealer for more information.

Self-discharge is a normal condition and occurs continuously. The rate of self-discharge depends on the ambient temperature and the battery's state of charge.

- Batteries discharge at a faster rate at higher ambient temperatures.
- To reduce the self-discharge rate, store battery in a cool (not freezing), dry place.
- Charge the battery every month if stored at temperatures below 60° F. (16° C).
- Charge the battery more frequently if stored in a warm area above 60° F. (16° C).

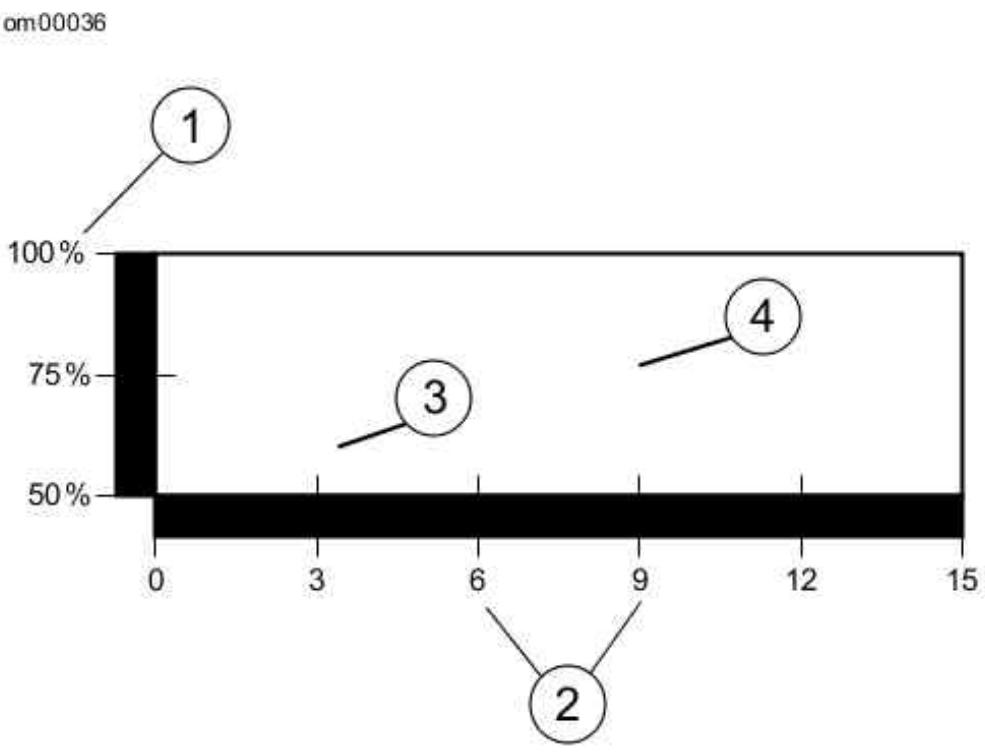


1. Capacity
2. Months of stand
3. Measured at 105 F (40 C)
4. Measured at 77 F (25 C)

**Effective Rate of Temperature on Battery Self-discharging Rate**

**Battery: Dyna Models**

## Disconnection and Removal

Before you can inspect or disconnect your battery you must read the section containing information about seat removal.

**⚠WARNING**

**Disconnect negative (-) battery cable first. If positive (+) cable should contact ground with negative (-) cable connected, the resulting sparks can cause a battery explosion, which could result in death or serious injury. (00049a)**

1. Remove the fastener under the battery cover on the right side of the motorcycle.
2. Remove battery cover.
3. Remove the negative (-) cable (black) from battery negative (-) terminal.
4. Remove battery positive cable (red) from battery positive (+) terminal.

5. Remove the rubber hold down strap and slide the battery out of the battery compartment.

## Installation and Connection

**CAUTION**

**Connect the cables to the correct battery terminals. Failure to do so could result in damage to the motorcycle electrical system. (00215a)**

**⚠WARNING**

**Connect positive (+) battery cable first. If positive (+) cable should contact ground with negative (-) cable connected, the resulting sparks can cause a battery explosion, which could result in death or serious injury. (00068a)**

**⚠WARNING**

**Do not allow positive (+) battery cable to contact ground with negative (-) cable connected. Resulting sparks can cause a battery explosion, which could result in death or serious injury. (00069a)**

1. Place the fully charged battery into the battery compartment.

**CAUTION**

**Do not over-tighten bolts on battery terminals. Use recommended torque values. Over-tightening battery terminal bolts could result in damage to battery terminals. (00216a)**

2. Insert bolt through battery positive cable (+) (red) into threaded hole of battery positive (+) terminal.
3. Tighten bolt to 60-96 in-lbs (6.8-10.8 Nm).
4. Insert bolt through battery negative cable (-) (black) into threaded hole of battery negative (-) terminal.
5. Tighten bolt to 60-96 in-lbs (6.8-10.8 Nm).

**CAUTION**

**Keep battery clean and lightly coat terminals with petroleum jelly to prevent corrosion. Failure to do so could result in damage to battery terminals. (00217a)**

6. Apply a light coat of petroleum jelly or corrosion retardant material to both battery terminals.
7. Install battery side cover.
8. Install lower fastener. Tighten to 20-40 in-lbs (2.26-4.52 Nm) .

**⚠WARNING**

**After installing seat, pull upward on seat to be sure it is locked in position. While riding, a loose seat can shift causing loss of control, which could result in death or serious injury. (00070b)**

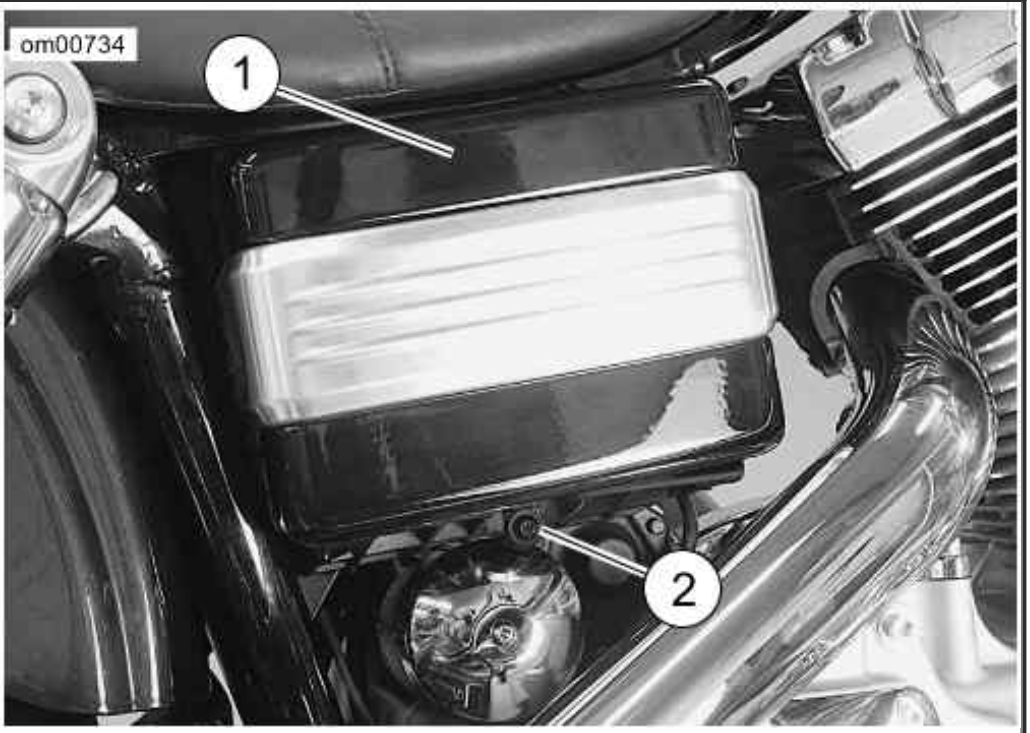


1. Battery compartment cover
2. Cover fastener

**Battery Compartment: Dyna Models**

## Jump Starting

Harley-Davidson does not recommend jump-starting a motorcycle. However, there may be circumstances when it is necessary to do so. Therefore, we suggest jump-starting be performed as follows:

**⚠WARNING**

**Be sure jumper cables touch only appropriate battery terminals or ground. Allowing jumper cables to touch each other can result in sparks and a battery explosion, which could result in death or serious injury. (00072a)**

**⚠WARNING**

**Explosive hydrogen gas, which escapes during charging,**

**Explosive hydrogen gas, which escapes during charging, could cause death or serious injury. Charge battery in a well-ventilated area. Keep open flames, electrical sparks and smoking materials away from battery at all times. KEEP BATTERIES AWAY FROM CHILDREN. (00065a)**

**CAUTION**

**Harley-Davidson motorcycles have a 12 Volt battery. Be sure the booster vehicle has a 12 Volt system. Failure to do so could result in vehicle damage. (00220a)**

*NOTE:*

*This procedure presumes the BOOSTER battery is in another vehicle.*

1. Turn off all unnecessary lamps and accessories.

## Positive Cable

2. See Jump Start Cable Connections. Connect one end of a jumper cable to the DISCHARGED battery positive (+) terminal (1).
3. Connect the other end of the same cable to the BOOSTER battery positive (+) terminal (2).

## Negative Cable

**⚠WARNING**

**Do not connect negative (-) cable to or near the discharged battery negative (-) terminal. Doing so could cause a spark and explosion, which could result in death or serious injury. (00073a)**

4. Connect one end of a jumper cable to the BOOSTER battery negative (-) terminal (3).

**CAUTION**

**Do not connect the negative (-) cable to painted or chrome parts. Doing so could result in discoloration at the attachment point. (00221a)**

5. Connect other end of the same cable (4) to a safe ground, (away from the DISCHARGED battery).
6. Start motorcycle.
7. Disconnect cables in reverse order of steps 2, 3, 4, 5. That is: steps 5, 4, 3, 2.

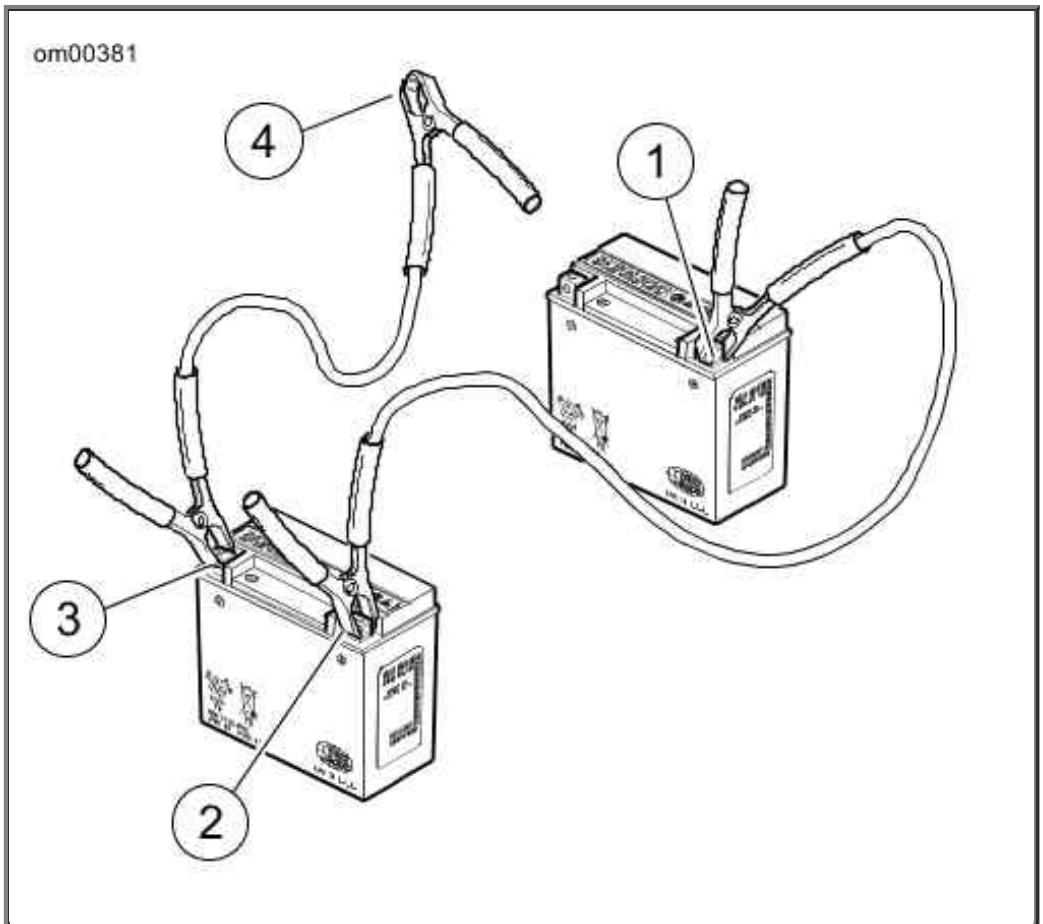


1. Discharged battery positive (+) terminal
2. Booster battery positive (+) terminal
3. Booster battery negative (-) terminal
4. Ground

**Jump Start Cable Connections**

### Electrical Protection: Dyna Models

## Fuses

See Fuse Block: 2006 Dyna Models. The fuse block is under the motorcycle's left side cover, behind the electrical panel cover. The block contains replaceable fuses.

*NOTE:*

*See Fuse Block: 2006 Dyna Models. Spare fuses are inserted into slots 7 and 8 in the fuse block. Automotive type ATO fuses are used for replacements.*

## Fuse Replacement

1. Place the ignition/headlamp key switch in the OFF position.
2. Gently pull left side cover from frame. (No tools are required for this step.)
3. See Fuse Block: 2006 Dyna Models. Remove the fuse and inspect the element.

**CAUTION**

**Always use replacement fuses that are of the correct type and amperage rating. Use of incorrect fuses can result in damage to electrical systems. (00222a)**

*NOTE:*

*The fuse labeled Security provides basic turn signal functionality on vehicles without a factory installed security system. Do not remove this fuse or use it as a replacement fuse for other systems.*

4. Align studs in side cover with grommets in frame and firmly push the side cover into place.

## Replacing the Maxi-Fuse

---

See 40 Amp Maxi-Fuse. All Dyna models have a main fuse to protect the motorcycle wiring. This 40-amp maxi-fuse provides main battery power to the motorcycle. It is located in the fuse holder behind the motorcycle's left side cover.

1. Gently pull left side cover from frame. (No tools are required for this step.)
2. Grasp and pull the maxi-fuse straight out of the fuse holder.
3. Insert the prongs of the **new** maxi-fuse in the fuse holder slots.
4. Align studs in side cover with grommets in frame and firmly push the side cover into place.

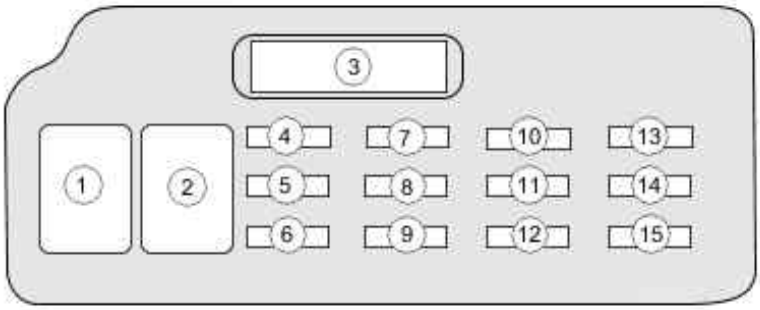


1. Start relay
2. System relay
3. Maxi-fuse (40 amp)
4. ECM module (15 amp)
5. Fuel pump (15 amp)
6. Blank (HDI: Engine Control Fuse)
7. Spare (15 amp)
8. Spare (15 amp)
9. Customer accessory (15 amp)
10. P&A ignition (15 amp)
11. Battery (15 amp)
12. Accessories (15 amp)
13. Instruments (15 amp)
14. Ignition (15 amp)
15. Lamps (15 amp)

**Fuse Block: 2006 Dyna Models**

om00162

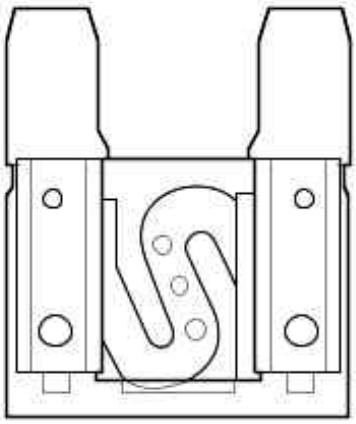

**40 Amp Maxi-Fuse**

## Seat: Dyna Models

# Removal

1. See Seat: Dyna Models. Remove screw and detach seat mounting bracket from top of rear fender.

   *NOTE:*

   *The straps are secured to the fender under the seat by a nut and washer.*

2. Raise seat and remove nut and washer from seat straps.
3. Slide seat to the rear of the motorcycle and lift seat.
4. It is not necessary to remove the seat bracket and its fasteners from the seat pan.

## Installation

---

1. Place seat on frame backbone.

   *NOTE:*

   *There is a tab at the front of the seat that slips under the rear fuel tank mount.*

2. Slide seat toward front of motorcycle until the tab locks under the fuel tank mount.
3. See Seat: Dyna Models. Push seat forward until rear fender seat retention nut is centered in hole of mounting bracket.
4. Install washer and nut to secure seat straps.
5. Install screw and bracket to fender.

   **⚠WARNING**

   **After installing seat, pull upward on seat to be sure it is locked in position. While riding, a loose seat can shift causing loss of control, which could result in death or serious injury. (00070b)**

6. Pull up on seat to verify that it is properly secured.

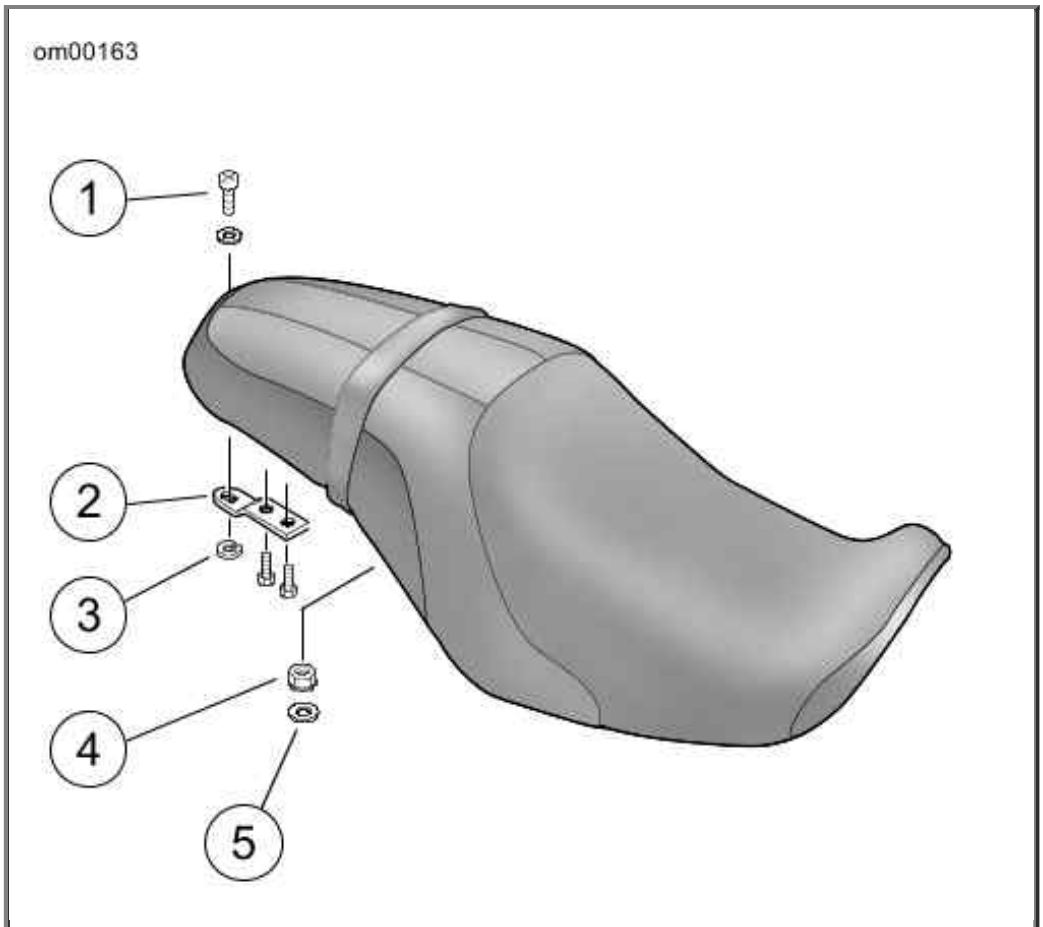


1. Screw
2. Bracket
3. Nylon clip
4. Nut
5. Washer

**Seat: Dyna Models**

**Motorcycle Storage**

## Placing Motorcycle in Storage

**CAUTION**

**Proper storage is important for the trouble-free operation of your motorcycle. See your Owner's Manual for storage recommendations or see a Harley-Davidson dealer. Improper storage procedures can lead to equipment damage. (00046a)**

If the motorcycle will not be operated for several months, such as during the winter season, there are several tasks which should be performed. These steps will protect parts against corrosion, preserve the battery and prevent the build-up of gum and varnish in the fuel system.

**⚠WARNING**

**Do not store motorcycle with gasoline in tank within the**

**home or garage where open flames, pilot lights, sparks or electric motors are present. Gasoline is extremely flammable and highly explosive, which could result in death or serious injury. (00003a)**

*NOTE:*

*Make a list of everything you do and fasten it to a handgrip. When you take the motorcycle out of storage, this list will be your reference/checklist to get your motorcycle in operating condition.*

1. Fill fuel tank and add a gasoline stabilizer. Use one of the commercially available gasoline stabilizers and follow the manufacturer's instructions.
2. Warm motorcycle to operating temperature. Change oil and turn engine over to circulate the new oil.
3. Adjust the belt.
4. Check tire inflation. Adjust to proper inflation pressure.
5. To protect the vehicle's body panels, engine, chassis and wheels from corrosion, follow the cosmetic care procedures described in the Accessory Maintenance section of this owner's manual prior to storage.
6. Prepare battery for winter storage. See Battery: General.

**⚠WARNING**

**Explosive hydrogen gas, which escapes during charging, could cause death or serious injury. Charge battery in a well-ventilated area. Keep open flames, electrical sparks and smoking materials away from battery at all times. KEEP BATTERIES AWAY FROM CHILDREN. (00065a)**

7. If the motorcycle is to be stored with security system armed, it will be necessary to connect a Battery Tender to maintain battery charge. If security system will not be armed and a Battery Tender is not available, either:
    a. Disconnect negative battery cable.
    b. Remove Maxi-fuse (if applicable).
8. If motorcycle is to be covered, use a material such as light canvas that will breathe. Plastic materials that do not breathe promote the formation of condensation.

## Removing Motorcycle From Storage

---

**⚠WARNING**

**The clutch failing to disengage can cause loss of control, which could result in death or serious injury. Prior to starting after extended periods of storage, place transmission in gear and push vehicle back and forth**

**several times to assure proper clutch disengagement. (00075a)**

1. See Battery: General for proper battery care. Charge and install the battery.
2. Remove and inspect the spark plugs. Replace if necessary.
3. Clean the air cleaner element.
4. Start the engine and run until it reaches normal operating temperature. Turn off engine.
5. Check amount of oil in the oil tank.
6. Check the transmission lubricant level.
7. Check controls to be sure they are operating properly. Operate the front and rear brakes, throttle, clutch and shifter.
8. Check steering for smoothness by turning the handlebars through the full operating range.

**⚠WARNING**

**Be sure tires are properly inflated, balanced and have adequate tread. Inspect your tires regularly and see a Harley-Davidson dealer for replacements. Riding with excessively worn, unbalanced or under-inflated tires can adversely affect stability and handling, which could result in death or serious injury. (00014a)**

9. Check tire pressure. Incorrect pressure will result in poor riding characteristics and can affect handling and stability.
10. Check all electrical equipment and switches including the stop lamp, turn signals and horn for proper operation.
11. Check for any fuel, oil or brake fluid leaks.

**CAUTION**

**Turn engine over a few times to be sure there is no oil in the crankcase and that all oil has been pumped back into the oil tank. Stop engine and re-check oil level. Failure to do so can result in engine damage. (00071a)**

# Accessories Maintenance

## General Maintenance

Maintain chrome and aluminum regularly to check that they retain their original shine and luster. Take care to keep your new Harley-Davidson motorcycle cleaned and waxed as often as possible to inhibit rust and corrosion.

## Cleaning Your Motorcycle: Dyna Models

To aid you in keeping your motorcycle clean, see your Harley-Davidson dealer for cleaning, polishing and waxing products.

For Harley-Davidson recommended cleaning products, refer to Recommended Cleaning Care Products.

**Recommended Cleaning Care Products**

| PRODUCT | PART NUMBER | FRAME | BODY PANELS | WHEELS | BLACK DENIM FINISH |
|---|---|---|---|---|---|
| H-D Sunwash | 94659-98 | Yes | Yes | Yes | No |
| H-D Bug Remover | 94657-98 | Yes | Yes | Yes | No |
| Harley-Gloss | 94627-98 | Yes | Yes | Yes | Yes |
| Harley Spray Cleaner and Polish | 99817-99 | Yes | Yes | Yes | No |
| Wheel and Tire Cleaner | 94658-98 | No | No | Yes | No |
| S100 Total Cycle Cleaner<br><br>(complete rinse required) | 99760-85T | Yes | Yes | Yes | No |
| Grease cutting dishwasher detergent. Dilute per manufacturer's instructions. | N/A | No | No | No | Yes |
| Ammonia base glass cleaner | N/A | No | No | No | Yes |

**⚠WARNING**

**Observe warnings on labels of cleaning compounds. Failure to follow warnings could result in death or serious injury. (00076a)**

**⚠WARNING**

**Do not wash brake discs with cleaners containing chlorine or silicone. Cleaners containing chlorine and silicone can impair brake function, which could result in death or serious injury. (00077a)**

**⚠WARNING**

**Do not let the brakes, engine, mufflers or air cleaner to get wet when washing your motorcycle. Allowing these components to get too wet can adversely affect their performance, which could result in death or serious injury. Start engine immediately after washing, and make sure brakes and engine are operating properly before riding in traffic. (00078a)**

## Black Denim Finish

## General

If your vehicle has flat (or matte) black finish please read below.

- The Black Denim finish has qualities which differ from high gloss finishes on all other Harley-Davidson motorcycles. Like denim fabric, Black Denim paint will burnish or mar with age and use, thus adding character and personality to the finish of the motorcycle.
- If scratched, the color coat of paint does nick/scuff and these marks can not be rubbed out.
- If polished, the finish will become less matte and more glossy over time.

## How to Clean

1. For heavier deposits:

    a. Use grease cutting dishwashing detergent and a clean H-D wash-mitt. (Dilute the detergent per the instruction provided by its manufacturer.)

    b. Rinse thoroughly with clean water.

2. For light deposits, use glass cleaner (ammonia base) and H-D Soft Cloth. This helps remove finger prints and light soil.

3. For final detailing use H-D Gloss with H-D Soft Cloth.

### Leather Care

*NOTE:*

*Many Harley-Davidson accessories and seats are either made of leather or have leather inserts. Natural materials age differently and require different care than man-made materials. Seat covers and panels made of leather will gain "character", such as wrinkles, with age. Leather is porous and organic and each leather product will settle into its own distinct form with use. Your leather product will mature into its own custom shape and style from the sun, rain and the miles. This maturing is natural and will enhance the custom quality of your Harley-Davidson motorcycle.*

Leather must be periodically cleaned and treated to maintain its appearance and extend its life. Clean and treat leather once a season or more frequently under adverse conditions.

**CAUTION**

**Do not use bleach or detergents containing bleach on saddlebags, seats, tank panels or painted surfaces. Doing so can result in equipment damage. (00229a)**

- Do not use ordinary soap to clean leather or fur. It could dry or remove the oils from the leather.
- Use ONLY a good quality saddle soap to clean leather. Be sure you rinse saddle soap off thoroughly before treating leather.
- Never try to dry leather quickly, using artificial means. Always let leather dry naturally, at

room temperature.

1. Vacuum or blow dust off.
2. Thoroughly clean leather with a good quality saddle soap, following manufacturer's directions. Rinse thoroughly with clean sponge or cloth and water. Allow leather to dry.
3. Once leather is dry, treat with a good quality leather treatment, such as LEATHERCARE (Part No. 98261-91).
4. Always allow leather to dry completely before using.

## Whitewall Tires

Use a good quality, commercial whitewall cleaner and follow the manufacturer's directions.

## Wheel Care

**⚠WARNING**

**Be careful not to get the brakes wet when washing vehicle. Wet brake pads and/or discs can adversely affect brake performance, which could result in death or serious injury. (00079a)**

Some vehicle's wheels are aluminum and do not have a protective coating. Other vehicles have laced wheels with chrome plated rims and zinc or chrome plated spokes. Damage from harsh chemicals, acid based wheel cleaners, brake dust and lack of maintenance can occur. Regular washing and the use of a corrosion protectant will help to maintain their original appearance. Harley-Davidson WHEEL AND TIRE CLEANER (Part No. 94658-98) is recommended for cleaning wheels and tires. Then use HARLEY GLOSS (Part No. 94627-98) to protect the wheel surfaces.

*NOTES:*

- *It is imperative that the wheels are cared for weekly to guard against pitting and corrosion.*
- *Corrosion of these components is not considered to be a defect in materials or workmanship.*

Harley-Davidson recommends the following products:

- WHEEL AND TIRE CLEANER (Part No. 94658-98): cleaner/degreaser for wheels, tires and engine.
- HARLEY GLOSS (Part No. 94627-98): all purpose surface protection the provides UV protection and a gloss finish.

See a Harley-Davidson dealer for cleaning, polishing and waxing products.

## Windshields

**CAUTION**

**Harley-Davidson windshields are made of Lexan. Lexan is**

**a more durable and distortion-resistant material than other types of motorcycle windshield material, but still requires attention and care to maintain. Failure to maintain Lexan properly can result in damage to the windshield. (00230a)**

**CAUTION**

**Do not use harsh chemicals including rain sheeting products on Harley-Davidson windshields. They can cause dulling or hazing. If you want to use a windshield protectant on your windshield, try Harley Glaze Polish and Sealant (00231a)**

**CAUTION**

**Do not use benzine, paint thinner, gasoline or any other type of harsh cleaner on the windshield. Doing so will damage the windshield surface. (00232a)**

*NOTES:*

- *To remove minor surface scratches use NOVUS No. 2 SCRATCH REMOVER (Part No. 99836-94T).*
- *Covering the windshield with a clean, wet cloth for approximately 15-20 minutes before washing will make dried bug removal easier.*

1. Use mild soap and warm water to wash the windshield.
2. Wipe dry with a soft, clean towel.

*NOTE:*

*To treat your Lexan windshield with water repellent use WINDSHIELD WATER REPELLENT TREATMENT (Part No. 99841-02).*

# Troubleshooting

## Troubleshooting: General

**⚠WARNING**

**The troubleshooting section of the Owner's Manual is a guide to diagnose problems. Read the service manual before performing any work. Improper repair and/or maintenance could result in death or serious injury. (00080a)**

The following checklist of possible operating troubles and their probable causes will be helpful in keeping your motorcycle in good operating condition. More than one of these conditions may be causing trouble and should be carefully checked.

## Engine: EFI Models

## Starter Does Not Operate or Does Not Turn Engine Over

1. Engine run switch in OFF position.
2. Ignition switch not ON.
3. Discharged battery or loose or corroded connections (solenoid chatters).

## Engine Turns Over But Does Not Start

1. Fuel tank empty.
2. Fuel vacuum line disconnected (If applicable).
3. Discharged battery or loose or broken battery terminal connections.
4. Fouled spark plugs.
5. Spark plug cable connections loose or in bad condition and shorting.
6. Loose or corroded wire or cable connection(s) at coil or battery.
7. Fuel pump inoperative (If applicable).

## Starts Hard

1. Spark plugs in bad condition, have improper gap, or are partially fouled.
2. Spark plug cables in bad condition and leaking.
3. Battery nearly discharged.
4. Loose wire or cable connection(s) at one of the battery terminals or at coil.
5. Engine oil too heavy (winter operation).
6. Fuel tank vent plugged or fuel line closed off, restricting fuel flow.
7. Water or dirt in fuel system.
8. Fuel pump inoperative (If applicable).

## Starts But Runs Irregularly or Misses

1. Spark plugs in bad condition or partially fouled.
2. Spark plug cables in bad condition and leaking.
3. Spark plug gap too close or too wide.
4. Battery nearly discharged.

5. Damaged wire or loose connection at battery terminals or coils.
6. Intermittent short circuit due to damaged wire insulation.
7. Water or dirt in fuel system or filter.
8. Fuel vent system plugged. See dealer.
9. One or more injectors fouled.

## A Spark Plug Fouls Repeatly

1. Fuel mixture too rich (If applicable).
2. Incorrect spark plug.

## Pre-ignition or Detonation (Knocks or Pings)

1. Incorrect fuel.
2. Incorrect spark plug for the kind of service.

## Overheats

1. Insufficient oil supply or oil not circulating.
2. Heavy carbon deposit from lugging engine. See dealer.
3. Insufficient air flow over cylinder heads during extended periods of idling or parade duty.

## Excessive Vibration

1. Rear fork pivot shaft nuts loose. See dealer.
2. Front engine mounting bolts loose. See dealer.
3. Engine to transmission mounting bolts loose. See dealer.
4. Broken frame. See dealer.
5. Front chain or links tight as a result of insufficient lubrication or belt badly worn.
6. Wheels and/or tires damaged. See dealer.
7. Vehicle not properly aligned. See dealer.

### Electrical System

## Alternator Does Not Charge

1. Module not grounded. See dealer.
2. Engine ground wire loose or broken. See dealer.
3. Loose or broken wires in charging circuit. See dealer.

## Alternator Charge Rate is Below Normal

1. Weak battery.
2. Excessive use of add-on accessories.
3. Loose or corroded connections.
4. Extensive periods of idling or low speed riding.

### Transmission

## Transmission Shifts Hard

1. Bent shifter rod. See dealer.
2. Transmission shifting mechanism needs adjustment. See dealer.

## Transmission Jumps Out of Gear

1. Shifter rod improperly adjusted. See dealer.
2. Worn shifter dogs in transmission. See dealer.

## Clutch Slips

1. Clutch controls improperly adjusted. See dealer.
2. Worn friction discs. See dealer.
3. Insufficient clutch spring tension. See dealer.

## Clutch Drags or Does Not Release

1. Clutch controls improperly adjusted. See dealer.
2. Primary chaincase overfilled.
3. Clutch discs warped. See dealer.

## Clutch Chatters

1. Friction discs or steel discs worn or warped. See dealer.

### Brakes

## Brakes Do Not Hold Normally

1. Master cylinder low on fluid. See dealer.
2. Brake line contains air bubbles. See dealer.
3. Master or wheel cylinder piston worn. See dealer.
4. Brake pads contaminated with grease or oil. See dealer.
5. Brake pads badly worn. See dealer.
6. Brake disc badly worn or warped. See dealer.
7. Brake fades because of heat build up. Excessive braking or brake pads dragging. See dealer.
8. Brake drags. Insufficient hand lever free play. See dealer.

# Warranties and Responsibilities

### Warranty and Maintenance

This Owner's Manual contains your new motorcycle warranty.

It is the owner's responsibility to follow the scheduled mileage intervals as specified; all of the specified maintenance services must be performed to keep your warranty valid.

1. Make an appointment with a Harley-Davidson dealer for inspection and service just before you have ridden 1000 miles (1600 kilometers).
2. Bring this Owner's Manual with you when you visit your dealer to have your motorcycle inspected and serviced.
3. Have the dealer technician sign at the proper mileage interval. The records should be retained by the owner as proof of proper maintenance.
4. Keep receipts covering any parts, service or maintenance performed. These records should be transferred to each subsequent owner.

**⚠WARNING**

**Do not use aftermarket parts and custom made front forks which can adversely affect performance and handling. Removing or altering factory installed parts can adversely affect performance and could result in death or serious injury. (00001a)**

Harley-Davidson dealerships are independently owned and operated and may sell parts and accessories that are not manufactured or approved by Harley-Davidson. Therefore, you should understand that we are not and cannot be responsible for the quality, suitability, or safety of any non-Harley-Davidson part, accessory or design modification, including labor, which may be sold and/or installed by our dealers.

## Keeping It All Harley-Davidson

1. Keep your Harley-Davidson completely Harley-Davidson.
2. Insist that your dealer uses only Genuine replacement parts to keep your Harley-Davidson motorcycle and its warranty intact.

Exacting design and stringent testing ensure performance and warranty coverage. Again, insist on Genuine parts for your genuine Harley-Davidson motorcycle.

*NOTE:*

*Installing off-road or competition parts to enhance performance may void all or part of your new motorcycle warranty. See the Harley-Davidson Limited Warranty in this manual or a Harley-Davidson dealer for details.*

**CAUTION**

**It is possible to overload your motorcycle's charging system by adding too many electrical accessories. If your combined electrical accessories operating at any one time consume more electrical current than your vehicle's charging system can produce, the electrical consumption can discharge the battery and cause vehicle electrical system damage. See a Harley-Davidson dealer for advice about the amount of current consumed by additional electrical accessories, or for necessary wiring changes. (00211b)**

## Important Moving Information

If you move from your present address, or sell your motorcycle, please fill out and mail the post card at the back of this manual. This is necessary in the event that the Company needs to contact the owner concerning information that could affect the safe operation of this motorcycle.

## California Evaporative Emission Controls: 2006 Models

All new model year 2006 Harley-Davidson motorcycles sold in the State of California are equipped with an evaporative emission control system. This system is designed to meet the CARB regulations in effect at the time of manufacture.

The system requires a small amount of maintenance. Periodic inspection is required to make sure hoses are properly routed, not kinked or blocked and that all fittings are secure. Mounting hardware should also be checked periodically for tightness.

## EPA Noise Regulations

EPA noise regulations require that the following statements be included in the Owner's Manual.

TAMPERING WITH NOISE CONTROL SYSTEM PROHIBITED: Federal law prohibits the following acts or the causing thereof: (1) The removal or rendering inoperative by any person other than for purposes of maintenance, repair, or replacement of any device or element of design incorporated into any new vehicle for the purpose of noise control prior to its sale or delivery to the ultimate purchaser or while it is in use, or (2) the use of the vehicle after such device or element of design has been removed or rendered inoperative by any person.

AMONG THOSE ACTS PRESUMED TO CONSTITUTE TAMPERING ARE THE ACTS LISTED BELOW.

1. Replacing the muffler(s) and/or the entire exhaust system with parts not certified to be noise legal for street use.
2. Removing or modifying the muffler internal baffles in any way.
3. Replacing the air intake/cleaner assembly with one not certified to be noise legal for street use.
4. Modifying the air intake/cleaner assembly in such a way as to make the vehicle no longer noise legal for street use.

Harley-Davidson recommends that any and all noise related maintenance be done by an authorized Harley-Davidson dealer using genuine Harley-Davidson parts.

### Warranty/Service Information

Any authorized Harley-Davidson dealer is responsible for providing the warranty repair work on your motorcycle. If you have any questions regarding warranty obligations contact your selling dealer.

For normal service work or warranty work under the above conditions, you may obtain the name and location of your nearest U.S. Harley-Davidson dealer by calling 1-800-490-9635 (toll free), in any state except Alaska and Hawaii.

*NOTE:*

*The number shown above is accessible only with a touch-tone phone.*

### Reporting Safety Defects

Safety defects must be reported to the National Highway Traffic Safety Administration (NHTSA) and Harley-Davidson.

## NHTSA Statement

If you believe that your vehicle has a defect which could cause a crash or could cause injury or death, you should immediately inform the National Highway Traffic Safety Administration (NHTSA) in addition to notifying Harley-Davidson.

If NHTSA receives similar complaints, it may open an investigation, and if it finds that a safety defect exists in a group of vehicles, it may order a recall and remedy campaign. However, NHTSA cannot become involved in individual problems between you, your dealer, or Harley-Davidson.

To contact NHTSA, refer to NHTSA Contacts.

**NHTSA Contacts**

| ITEM | DATA |
|---|---|
| Phone | Call the Auto Safety Hot Line toll-free at 1-888-DASH-2DOT |
| Mail | U.S. Department of Transportation, National Highway Traffic Safety Administration, Office of Defects Investigation, NVS-210, 400 7th Street S.W., Washington, D.C. 20590 |
| Web site | www.nhtsa.dot.gov |

You can also obtain other information about motor vehicle safety from the hot line.

### Owner Transfer Identification Form

---

When purchasing a pre-owned Harley-Davidson or Buell, we encourage you to submit an Owner Transfer Notification Form. It is critical that new owner information is communicated to Harley-Davidson. New owner information is required to be on file with Harley-Davidson to transfer an Extended Service Plan Contract. Harley-Davidson is also required by the National Traffic and Motor Vehicle Safety Act to notify all owners in the event of a recall. The form may be obtained at any Harley-Davidson dealer.

### Required Documentation for Imported Motorcycles

---

If a Harley-Davidson is imported into the United States, additional documentation is required to be eligible for the United States Manufacturer's Limited Warranty. A Harley-Davidson dealer can provide a form explaining the requirements.

## Limited Motorcycle Warranty

### 2006 HARLEY-DAVIDSON MOTORCYCLE LIMITED WARRANTY

---

## 24 Months/Unlimited Miles

---

Harley-Davidson warrants for any new 2006 Harley-Davidson motorcycle/sidecar that an authorized Harley-Davidson dealer will repair or replace without charge any parts found under normal use to be defective in factory materials or workmanship. Such repair and replacement will be Harley-Davidson's sole obligation and the customer's sole remedy under this warranty.

THERE IS NO OTHER EXPRESS WARRANTY (OTHER THAN THE SEPARATE EMISSIONS AND NOISE WARRANTIES) ON THE MOTORCYCLE. ANY IMPLIED WARRANTY OF MERCHANTABILITY OR FITNESS FOR PARTICULAR PURPOSE IS LIMITED TO THE DURATION OF THIS WARRANTY.

Some states do not allow limitations on how long an implied warranty lasts, so the above limitation

may not apply to you.

TO THE FULLEST EXTENT ALLOWED BY LAW, HARLEY-DAVIDSON AND ITS DEALERS SHALL NOT BE LIABLE FOR LOSS OF USE, INCONVENIENCE, LOST TIME, COMMERCIAL LOSS OR OTHER INCIDENTAL OR CONSEQUENTIAL DAMAGES. Some states do not allow the exclusion or limitation of incidental or consequential damages, so the above limitation or exclusion may not apply to you. This warranty gives you specific legal rights, and you may have other rights which vary from state to state.

The following terms and conditions apply to this warranty:

## Duration

1. The duration of this limited warranty is twenty four months, starting from the earlier of (a) the date of initial retail purchase and delivery from an authorized Harley-Davidson dealer, or (b) the third anniversary of the last day of the model year of the motorcycle/sidecar. Your dealer will submit an electronic Sales and Warranty Registration form to initiate your warranty.

2. Any unexpired portion of this limited warranty will be transferred to subsequent owners, upon the resale of the motorcycle/sidecar during the warranty period.

## Owner's Obligations

To obtain warranty service, return your motorcycle/sidecar at your expense within the warranty period to an authorized dealer. Our dealer should be able to provide warranty service during normal business hours and as soon as possible, depending upon the workload of the dealer's service department and the availability of necessary parts.

Harley-Davidson Motor Company, P.O. Box 653, Milwaukee, Wisconsin 53201, U.S.A.

## Exclusions

This warranty will not apply to any motorcycle/sidecar as follows:

1. Which has not been operated or maintained as specified in the Owner's Manual.

2. Which has been abused, misused, improperly stored, used "off the highway," or used for racing or competition of any kind.

3. Which is not manufactured to comply with the laws of the market in which it is registered.

4. Installing off-road or competition parts to enhance performance may void all or part of your new motorcycle warranty. See a Harley-Davidson dealer for details.

## Other Limitations

This warranty does not cover:

1. Parts and labor for normal maintenance as recommended in the Owner's Manual, or the replacement of parts due to normal wear and tear including such items as the following: tires, lubrication, oil and filter change, fuel system cleaning, battery maintenance, engine

tune-up, spark plugs, brake, clutch and chain/belt adjustment (including chain replacement).

2. Cosmetic concerns that arise as a result of owner abuse, lack of proper maintenance or environmental conditions (except concerns that result from defects in material or workmanship, which are covered by this warranty for the duration of the warranty period).

3. Any cosmetic condition existing at the time of retail delivery that has not been documented by the selling dealer prior to retail delivery.

4. Defects or damage to the motorcycle caused by alterations outside of Harley-Davidson factory specifications.

## Important: Read Carefully

---

1. Our dealers are independently owned and operated and may sell other products. Because of this, HARLEY-DAVIDSON IS NOT RESPONSIBLE FOR THE SAFETY, QUALITY, OR SUITABILITY OF ANY NON-HARLEY-DAVIDSON PART, ACCESSORY OR DESIGN MODIFICATION INCLUDING LABOR WHICH MAY BE SOLD AND/OR INSTALLED BY OUR DEALERS.

2. This warranty is a contract between you and the manufacturer. It is separate and apart from any warranty you may receive or purchase from the dealer. The dealer is not authorized to alter, modify, or in any way change the terms and conditions of this warranty.

3. Any warranty work or parts replacement authorized by the manufacturer will not preclude the manufacturer from later relying on any exclusion where applicable.

## Limited Noise Warranty

### 2006 HARLEY-DAVIDSON MOTORCYCLE NOISE CONTROL SYSTEM LIMITED WARRANTY

---

The following warranty applies to the noise control system, is in addition to the MOTORCYCLE LIMITED WARRANTY and EMISSION CONTROL SYSTEM LIMITED WARRANTY, and applies only to motorcycles sold in the U.S.

Harley-Davidson Motor Company warrants that this vehicle is designed and built so as to conform at the time of sale with applicable regulations of the U.S. Environmental Protection Agency (as tested following F-76 Drive-By test procedure) and that it is free from defects in materials and workmanship which would cause this motorcycle not to meet U.S. Environmental Protection Agency Standards within 1 year or 3,730 miles (6,000 kilometers) whichever expires first. Any unexpired portion of this limited warranty will be transferred to subsequent owners, upon the resale of the motorcycle during the warranty period.

THERE IS NO OTHER EXPRESS WARRANTY (OTHER THAN THE SEPARATE MOTORCYCLE AND EMISSIONS WARRANTIES) ON THE MOTORCYCLE. ANY IMPLIED WARRANTY OF MERCHANTABILITY OR FITNESS FOR PARTICULAR PURPOSE IS LIMITED TO THE DURATION OF THIS WARRANTY.

Some states do not allow limitations on how long an implied warranty lasts, so the above limitation may not apply to you.

The warranty period shall begin on the date the motorcycle is delivered to the first retail purchaser or, if the motorcycle is placed in service as a demonstrator or company vehicle prior to sale at retail, on the date it is first placed in service.

THE FOLLOWING ITEMS ARE NOT COVERED BY THE NOISE CONTROL SYSTEM WARRANTY

1. Failures which arise as a result of misuse, alterations, or accident as specified in the Owner's Manual.
2. Replacing, removing, or modifying any portion of the NOISE CONTROL SYSTEM (consisting of the exhaust system and air intake/cleaner assembly) with parts not certified to be legal for street use.
3. Any motorcycle on which the odometer mileage has been changed so that the mileage cannot be determined.
4. TO THE FULLEST EXTENT ALLOWED BY LAW, HARLEY-DAVIDSON AND ITS DEALERS SHALL NOT BE LIABLE FOR LOSS OF USE, INCONVENIENCE, LOST TIME, COMMERCIAL LOSS OR OTHER INCIDENTAL OR CONSEQUENTIAL DAMAGES.

Some states do not allow the exclusion or limitation of incidental or consequential damages, so the above limitation or exclusion may not apply to you.

## Other Rights

---

This warranty gives you specific legal rights, and you may have other rights which vary from state to state.

## Recommendations for Required Maintenance

---

It is recommended that any noise system maintenance be performed by an authorized Harley-Davidson dealer using genuine Harley-Davidson replacement parts. The maintenance, replacement or repair of the noise control system may be performed by any other qualified service outlet or individual. Non-genuine parts may be used only if such parts are certified to comply with U.S. Environmental Protection Agency Standards.

Harley-Davidson Motor Company, P.O. Box 653, Milwaukee, Wisconsin 53201, U.S.A.

# Limited Emission Warranty

### 2006 HARLEY-DAVIDSON EMISSION CONTROL SYSTEM LIMITED WARRANTY

---

The following warranty applies to the emission control system, is in addition to the LIMITED MOTORCYCLE WARRANTY and NOISE CONTROL SYSTEM LIMITED WARRANTY, and applies only to motorcycles sold in the U.S.

Harley-Davidson Motor Company warrants that this vehicle is designed and built so as to conform at the time of sale with applicable regulations of the U.S. Federal Environmental Protection Agency, and that it is free from defects in materials and workmanship which would cause this motorcycle not to meet U.S. Environmental Protection Agency Standards within 5 years or 18,641 miles (30,000 kilometers) whichever expires first. Any unexpired portion of this limited warranty

will be transferred to subsequent owners, upon the resale of the motorcycle during the warranty period.

THERE IS NO OTHER EXPRESS WARRANTY (OTHER THAN THE SEPARATE MOTORCYCLE AND NOISE WARRANTIES) ON THE MOTORCYCLE. ANY IMPLIED WARRANTY OF MERCHANTABILITY OR FITNESS FOR PARTICULAR PURPOSE IS LIMITED TO THE DURATION OF THIS WARRANTY.

Some states do not allow limitations on how long an implied warranty lasts, so the above limitation may not apply to you.

The warranty period shall begin on the date the motorcycle is delivered to the first retail purchaser or, if the motorcycle is placed in service as a demonstrator or company vehicle prior to sale at retail, on the date it is first placed in service.

THE FOLLOWING ITEMS ARE NOT COVERED BY THE EMISSION CONTROL SYSTEM WARRANTY

1. Failures which arise as a result of misuse, alterations, accident or non-performance of maintenance as specified in the Owner's Manual.
2. The replacement of parts (such as spark plugs, fuel and oil filters, etc.) used in required maintenance.
3. Any motorcycle on which the odometer mileage has been changed so that the mileage cannot be determined.
4. TO THE FULLEST EXTENT ALLOWED BY LAW, HARLEY-DAVIDSON AND ITS DEALERS SHALL NOT BE LIABLE FOR LOSS OF USE, INCONVENIENCE, LOST TIME, COMMERCIAL LOSS OR OTHER INCIDENTAL OR CONSEQUENTIAL DAMAGES.

Some states do not allow the exclusion or limitation of incidental or consequential damages, so the above limitation or exclusion may not apply to you.

## Other Rights

This warranty gives you specific legal rights, and you may have other rights which vary from state to state.

## Recommendations for Required Maintenance

It is recommended that any emission system maintenance be performed by an authorized Harley-Davidson dealer using genuine Harley-Davidson replacement parts. The maintenance, replacement or repair of the emissions control system may be performed by any other qualified service outlet or individual. Non-genuine parts may be used only if such parts are certified to comply with U.S. Environmental Protection Agency Standards.

Harley-Davidson Motor Company, P.O. Box 653, Milwaukee, Wisconsin 53201, U.S.A.

# Maintenance Scheduling

### Regular Service Intervals

Regular lubrication and maintenance will help keep your new Harley-Davidson operating at peak performance. Your Harley-Davidson dealer knows best how to service your motorcycle with factory approved methods and equipment assuring you of thorough and competent workmanship.

*NOTES:*

- *Refer to Regular Service Intervals: 2006 Dyna Models. Regular maintenance interval operations are required to keep your new motorcycle warranty in force. The use of other than Harley-Davidson approved parts and service procedures may void the warranty. Any alterations to the emission system components, such as the carburetor and exhaust system, may be in violation of Federal and State laws.*
- *Refer to Owner's Maintenance Records. When servicing your motorcycle, bring this owner's manual to the dealership and complete information needed in the blank columns listed.*

**⚠WARNING**

**Perform the service and maintenance operations as indicated in the regular service interval table. Lack of regular maintenance at the recommended intervals can affect the safe operation of your motorcycle, which could result in death or serious injury. (00010a)**

**⚠WARNING**

**If you operate your motorcycle under adverse conditions (severe cold, extreme heat, very dusty environment, very bad roads, through standing water, etc.), you should perform the regular maintenance intervals more frequently to ensure the safe operation of your motorcycle. Failure to maintain your motorcycle could result in death or serious injury. (00094a)**

**Regular Service Intervals: 2006 Dyna Models**

| ITEM SERVICED | PROCEDURE | 1000 MI. 1600 KM | 5000 MI. 8000 KM | 10,000 MI. 16,000 KM | 15,000 MI. 24,000 KM | 20,000 MI. 32,000 KM | 25,000 MI. 40,000 KM | NOTES |
|---|---|---|---|---|---|---|---|---|
| Engine oil and filter | Replace | X | X | X | X | X | X | |
| Air cleaner | Inspect, service as required | X | X | X | X | X | X | |
| Tires | Check pressure, inspect tread | X | X | X | X | X | X | |
| Wheel spokes | Check tightness | X | X | | | X | | 1, 4 |
| Primary chaincase lubricant | Replace | X | X | X | X | X | X | |
| Transmission lubricant | Replace | X | X | X | X | X | X | |
| Clutch | Check adjustment | X | X | X | X | X | X | 1 |

| | | | | | | | | |
|---|---|---|---|---|---|---|---|---|
| Clutch | Check adjustment | X | X | X | X | X | X | 1 |
| Rear belt and sprockets | Inspect, adjust belt | X | X | X | X | X | X | 1 |
| Throttle, brake and clutch controls | Check, adjust and lubricate | X | X | X | X | X | X | 1 |
| Jiffy stand | Inspect and lubricate | X | | X | | X | | 1 |
| Fuel, lines and fittings | Inspect for leaks | X | X | X | X | X | X | 1 |
| Fuel tank filter screen | Clean | | | | | | X | 1 |
| Brake fluid | Check levels and condition | X | X | X | X | X | X | 5 |
| Brake pads and discs | Inspect for wear | X | X | X | X | X | X | |
| Spark plugs | Inspect | X | X | X | X | X | X | |
| | Replace | | | X | | X | | |
| Electrical equipment and switches | Check operation | X | X | X | X | X | X | |
| Front fork oil | Replace | | | | | X | | 1 |
| Steering head bearings | Adjust | X | | X | | X | | 1, 2 |
| Rear fork bearings | | Inspect every 30,000 miles (48,000 kilometers) | | | | | | 1 |
| Rear primary bearing | | Replace every 15,000 miles (24,000 kilometers) | | | | | | 6 |
| Critical fasteners | Check tightness | X | | X | | X | | 1 |
| Engine mounts and stabilizer links | Inspect | | | X | | X | | 1 |
| Battery | Check battery and clean connections | | | | | | | 3 |
| Road test | Verify component and system functions | X | X | X | X | X | X | |

**NOTES:**

1. Should be performed by an authorized Harley-Davidson dealer, unless you have the proper tools, service data and are mechanically qualified.

2. Disassemble, lubricate and inspect every 30,000 miles (48,000 kilometers).

3. Perform annually.

4. Not all vehicles are equipped with an enrichener, fuel valve or spoke wheels. Consult appropriate topic in service manual.

5. Replace D.O.T. 4 HYDRAULIC BRAKE FLUID and flush system every two (2) years.

6. See an authorized Harley-Davidson dealer.

**Owner's Maintenance Records**

| SERVICE MILE INTERVAL | DATE | DEALER NUMBER | TECHNICIAN NAME | TECHNICIAN SIGNATURE |
|---|---|---|---|---|
| 1000 mi. (1600 km) | | | | |
| 5000 mi. (8000 km) | | | | |
| 10,000 mi. (16,000 km) | | | | |
| 15,000 mi. (24,000 km) | | | | |
| 20,000 mi. (32,000 km) | | | | |
| 25,000 mi. (40,000 km) | | | | |
| 30,000 mi. (48,000 km) | | | | |
| 35,000 mi. (56,000 km) | | | | |
| 40,000 mi. (64,000 km) | | | | |
| 45,000 mi. (72,000 km) | | | | |
| 50,000 mi. (80,000 km) | | | | |

## Service Literature

Refer to Service Literature: 2006 Dyna Models. Visit a Harley-Davidson dealer or www.harley-davidson.com to purchase a service or parts manual for your motorcycle. Factory authorized manuals are the most complete and detailed source of information outside of your Harley-Davidson dealer.

**Service Literature: 2006 Dyna Models**

| DOCUMENT | LANGUAGE | PART NUMBER |
|---|---|---|
| Service Manual | English | 99481-06 |
| Electrical Diagnostics Manual | English | 99496-06 |
| Service and Electrical Diagnostics Manual | French | 99481-06F |
| Service and Electrical Diagnostics Manual | German | 99481-06G |
| Service and Electrical Diagnostics Manual | Spanish | 99481-06S |
| Service and Electrical Diagnostics Manual | Italian | 99481-06I |
| Parts Catalog | English | 99439-06 |