2016 Harley-Davidson Street 750 - Owner's Manual

Introduction

Your Owner's Manual

This manual has been prepared to acquaint you with the operation, care and maintenance of your motorcycle. It also provides important safety information. Follow these instructions carefully for maximum motorcycle performance and for your personal motorcycling safety and pleasure.

Your owner's manual contains instructions for operation and minor maintenance. Major repairs are covered in the Harley-Davidson service manual. Major repairs require the attention of a skilled technician and the use of special tools and equipment. Your Harley-Davidson dealer has the facilities, experience and Genuine Harley-Davidson parts necessary to render this valuable service. We recommend that any emission system maintenance be performed by an authorized Harley-Davidson dealer.

Harley-Davidson reserves the right to change specifications, equipment or designs at any time without notice and without incurring obligation.

This owner's manual should be considered a permanent part of the motorcycle and should remain with the motorcycle if it is resold.

Customer Service Assistance

Most sales or service issues are resolved at the dealership.

1. Discuss your problem with the appropriate personnel at the dealership in the Sales, Service or Parts area. If that proves unsuccessful, speak to the owner of the dealership or the general manager.

2. If you cannot resolve the issue with the dealership, contact the Harley-Davidson Customer Support Center.

   Harley-Davidson Motor Company

   Attention: Harley-Davidson Customer Support Center

   P.O. Box 653

   Milwaukee, Wisconsin 53201

   1-800-258-2464 (U.S. only)

   1-414-343-4056

For customers outside the US, contact your local Harley-Davidson market office, call 1-414-343-4056 or visit harley-davidson.com.

Vehicle and Personal Data

PERSONAL INFORMATION	DEALER INFORMATION
Date of Purchase:	

Name:	Name:
Address:	Address:
Address:	Address:
Vehicle Identification Number:	Sales Contact:
Key Number:	Service Contact:

Safety First

Safety Definitions

Statements in this manual preceded by the following words are of special significance:

⚠WARNING

WARNING indicates a potentially hazardous situation which, if not avoided, could result in death or serious injury. (00119a)

⚠CAUTION

CAUTION indicates a potentially hazardous situation which, if not avoided, may result in minor or moderate injury. (00139a)

CAUTION

NOTICE indicates a potentially hazardous situation which, if not avoided, may result in property damage. (00140b)

NOTE:

Refers to important information and is placed in italic type. It is recommended that you take special notice of these items.

Rules of the Road

- Always sound your horn, use your turn signals and exercise caution when passing other vehicles going in the same direction. Never pass going in the same direction at street intersections, on curves or when going up or down a hill.
- At street intersections, give the right-of-way. Do not presume you have the right-of-way, as the other driver may not know that it is your turn.
- Always signal when preparing to stop, turn or pass.
- Promptly obey all traffic signs, including those signs used for the control of traffic at intersections. Always obey traffic signs near schools and at railroad crossings.
- When intending to turn, signal at least 100 ft 30.5 m before reaching the turning point. If turning across an intersection, move over to the centerline of the street (unless local rules require otherwise). Slow down when entering the intersection and turn carefully.
- Never anticipate a traffic light. When a change is indicated from GO to STOP (or STOP to

GO), slow down and wait for the light to change. Never run through a yellow or red traffic light.
- While turning, watch for pedestrians, animals, as well as vehicles.
- Do not leave the curb or parking area without signaling. Make sure that your way is clear to enter moving traffic. A moving line of traffic always has the right-of-way.
- Make sure that your license plate is installed in the position specified by law. Make sure that your license plate is always clearly visible. Keep the license plate clean.
- Ride at a safe speed that is consistent with the type of highway you are on. Pay strict attention to whether the road is dry, oily, icy or wet.
- Watch for debris such as leaves or loose gravel.
- Weather and traffic conditions on the highway dictate adjusting your speed and driving habits accordingly.

Safety: Operating Rules

Harley-Davidson Motorcycles Are for On-Road Use Only

This motorcycle is not equipped with a spark arrester. This motorcycle is designed to be used only on the road. Operation or off-road usage in some areas may be illegal. Obey local laws and regulations.

General

⚠WARNING

Consult a Harley-Davidson dealer regarding any questions or problems that occur in the operation of your motorcycle. Failure to do so can aggravate an initial problem, cause costly repairs, cause an accident and could result in death or serious injury. (00020a)

- Make sure all equipment required by federal, state and local law is installed and in good operating condition.
- Know and respect the rules of the road. Read the safety information that is provided by your state or regional traffic authority.
- In the United States, read the RIDING TIPS booklet that is provided with this owner's manual. Read the MOTORCYCLE HANDBOOK which is made available by your state or regional traffic authority.

- Protect your motorcycle against theft. Lock the front fork. Remove the key when parking your motorcycle.

⚠WARNING

Do not add sidecar to this motorcycle. Operating motorcycle with sidecar can cause loss of vehicle control, which could result in death or serious injury. (00590d)

Operation

Before operating your new motorcycle, it is your responsibility to read and follow the operating and maintenance instructions in this manual and follow these rules for your personal safety.

⚠WARNING

Motorcycles are different from other vehicles. They operate, steer, handle and brake differently. Unskilled or improper use could result in loss of control, death or serious injury. (00556c)

- Take a rider training course.
- Read all the owner's manual before riding, adding accessories or servicing.
- Wear an approved helmet, clothing and foot gear suited for motorcycle riding. Bright or light colors are best for greater visibility in traffic, especially at night. Avoid loose, flowing garments and scarves.
- Never tow a trailer.
- Before starting the engine, review the Pre-Ride Checklist.

⚠WARNING

Striking an object, such as a curb or pothole can cause internal tire damage. If an object is struck, have the tire inspected immediately inside and out by a Harley-Davidson dealer. A damaged tire can fail while riding and adversely affect stability and handling, which could result in death or serious injury. (00058b)

⚠WARNING

Travel at speeds appropriate for road and conditions and never travel faster than posted speed limit. Excessive speed can cause loss of vehicle control, which could result in death or serious injury. (00008a)

- Do not exceed the legal speed limit or drive too fast for existing conditions. Always reduce speed when poor driving conditions exist. High speed increases the influence of any other condition affecting stability and increases the possibility of loss of control.
- Pay strict attention to road surfaces and wind conditions and keep both hands on the handlebar grips at all times when riding the motorcycle. Any two wheeled vehicle may be subject to upsetting forces such as wind blasts from passing trucks, holes in the pavement, rough road surfaces, rider control error, etc. These forces may influence the handling characteristics of your motorcycle. If this happens, reduce speed and guide the motorcycle with a relaxed grip to a controlled condition. Do not brake abruptly or force the handlebar. This may aggravate an unstable condition.
- New riders should gain experience under various conditions while riding at moderate speeds.
- Operate your motorcycle defensively. In an accident, a motorcycle does not afford the same protection as an automobile.
- It is the rider's responsibility to instruct passengers on proper riding procedures.
- Do not allow other individuals to operate the motorcycle unless they are experienced, licensed riders and are thoroughly familiar with the operation of the motorcycle.

⚠WARNING

Front and/or rear guard(s) can provide limited leg and cosmetic vehicle protection under unique circumstances. (Fall over while stopped, very slow speed slide.) It is not made or intended to provide protection from bodily injury in a collision with another vehicle or any other object. (00022b)

Stability, Steering and Handling

⚠WARNING

Do not operate vehicle with forks locked. Locking the forks restricts the vehicle's turning ability, which could result in death or serious injury. (00035a)

⚠WARNING

Regularly inspect shock absorbers and front forks. Replace leaking, damaged or worn parts that can adversely affect stability and handling, which could result in death or serious injury. (00012a)

⚠WARNING

Do not operate motorcycle with loose, worn or damaged steering or suspension systems. Contact a Harley-Davidson dealer for repairs. Loose, worn or damaged steering or suspension components can adversely affect stability and handling, which could result in death or serious injury. (00011a)

⚠WARNING

Do not open storage compartments while riding. Distractions while riding can lead to loss of control, which could result in death or serious injury. (00082a)

⚠WARNING

When riding on wet roads, brake efficiency and traction are greatly reduced. Failure to use care when braking, accelerating or turning on wet roads can cause loss of control, which could result in death or serious injury. (00041a)

Cargo and Loading

⚠WARNING

Do not exceed the motorcycle's Gross Vehicle Weight Rating (GVWR) or Gross Axle Weight Rating (GAWR). Exceeding these weight ratings can lead to component failure and adversely affect stability, handling and performance, which could result in death or serious injury. (00016f)

- GVWR is the sum of the weight of the motorcycle, accessories and the maximum weight of the rider, passenger and cargo that can be safely carried.
- The GVWR is shown on the information label, located on the frame steering head or the frame downtube.
- GAWR is the maximum amount of weight that can be safely carried on each end of the motorcycle.
- For GVWR and GAWR, front and rear, refer to Weights

- Keep cargo weight concentrated close to the motorcycle and as low as possible.
- Distribute weight evenly on both sides of the vehicle.
- Do not load bulky items too far behind the rider or add weight to the handlebars or front forks.
- Do not exceed maximum specified load in each saddlebag (if equipped).
- Luggage racks (if equipped) are designed for lightweight items. Do not overload racks.
- Make sure cargo is secure. Make sure the cargo will not shift while riding and check the cargo periodically. Accessories that change the operator's riding position may increase reaction time and affect handling of the motorcycle.
- Large surfaces such as fairings, windshields, backrests and luggage racks (if equipped) can adversely affect on stability and handling.

Tires

⚠WARNING

Be sure tires are properly inflated, balanced, undamaged, and have adequate tread. Inspect your tires regularly and see a Harley-Davidson dealer for replacements. Riding with excessively worn, unbalanced, improperly inflated, overloaded or damaged tires can lead to tire failure and adversely affect stability and handling, which could result in death or serious injury. (00014b)

⚠WARNING

Replace punctured or damaged tires. In some cases, small punctures in the tread area may be repaired from within the removed tire by a Harley-Davidson dealer. Speed should NOT exceed 50 mph (80 km/h) for the first 24 hours after repair, and the repaired tire should NEVER be used over 80 mph (130 km/h). Failure to follow this warning could lead to tire failure and result in death or serious injury. (00015b)

Towing and Trailering

⚠WARNING

Do not pull a trailer with a motorcycle. Pulling a trailer can cause tire overload, damage and failure, reduced braking performance, and adversely affect stability and handling, which could result in death or serious injury. (00018c)

⚠WARNING

Do not tow a disabled motorcycle. Towing can adversely affect stability and handling, which could result in death or serious injury. (00017a)

Never tow a trailer.

Fuel and Exhaust

⚠WARNING

Stop the engine when refueling or servicing the fuel system. Do not smoke or allow open flame or sparks near gasoline. Gasoline is extremely flammable and highly explosive, which could result in death or serious injury. (00002a)

⚠WARNING

Avoid spills. Slowly remove filler cap. Do not fill above bottom of filler neck insert, leaving air space for fuel expansion. Secure filler cap after refueling. Gasoline is extremely flammable and highly explosive, which could result in death or serious injury. (00028a)

- Refuel in a well-ventilated area with the engine off.
- Remove the fuel filler cap slowly.
- Do not fill fuel tank above the bottom of the filler neck insert. Leave air space to allow for fuel expansion.

⚠WARNING

Avoid contact with exhaust system and wear protective clothing that completely covers legs while riding. Exhaust pipes and mufflers get very hot when engine is running and remain too hot to touch, even after engine is turned off. Failure to wear protective clothing could result in

burns or other serious injury. (00009a)

⚠WARNING

Do not run motorcycle in a closed garage or confined area. Inhaling motorcycle exhaust, which contains poisonous carbon monoxide gas, could result in death or serious injury. (00005a)

⚠WARNING

Engine exhaust from this product contains chemicals known to the State of California to cause cancer, and birth defects or other reproductive harm. (00004f)

Cooling System

⚠CAUTION

At operating temperature, radiators and oil coolers contain hot fluids. Contact with a radiator or oil cooler can result in minor or moderate burns. (00141b)

⚠WARNING

Coolant mixture contains toxic chemicals, which may be fatal if swallowed. If swallowed, do not induce vomiting; call a physician immediately. Use in a well ventilated area. Irritation to skin or eyes can occur from vapors or direct contact. In case of skin or eye contact, flush thoroughly with water and go to hospital, if necessary. Dispose of used coolant according to federal, state and local regulations. (00092a)

⚠CAUTION

Cooling fans operate automatically, even when the ignition switch is off. Keep hands away from fan blades. Contact with a rotating fan blade can result in minor or moderate injury. (00093a)

Brakes

⚠WARNING

Brakes are a critical safety component. Contact a Harley-Davidson dealer for brake repair or replacement.

Improperly serviced brakes can adversely affect brake performance, which could result in death or serious injury. (00054a)

⚠WARNING

Apply front and rear brakes evenly. Favoring one brake accelerates wear and reduces braking efficiency. Operation with excessively worn brakes can lead to brake failure, which could result in death or serious injury. (00135a)

⚠CAUTION

Direct contact of D.O.T. 4 brake fluid with eyes can cause irritation. Avoid eye contact. In case of eye contact flush with large amounts of water and get medical attention. Swallowing large amounts of D.O.T. 4 brake fluid can cause digestive discomfort. If swallowed, obtain medical attention. Use in well ventilated area. KEEP OUT OF REACH OF CHILDREN. (00240a)

Battery

⚠WARNING

Batteries, battery posts, terminals and related accessories contain lead and lead compounds, and other chemicals known to the State of California to cause cancer, and birth defects or other reproductive harm. Wash hands after handling. (00019e)

⚠WARNING

Batteries contain sulfuric acid, which could cause severe burns to eyes and skin. Wear a protective face shield, rubberized gloves and protective clothing when working with batteries. KEEP BATTERIES AWAY FROM CHILDREN. (00063a)

CAUTION

It is possible to overload your vehicle's charging system by adding too many electrical accessories. If the combined electrical accessories operating at any one time consume more electrical current than the vehicle's charging system can produce, the electrical consumption can discharge the battery and cause damage to the vehicle's electrical system. See an authorized Harley-Davidson dealer for

advice about the amount of current consumed by additional electrical accessories or for necessary wiring changes. (00211c)

Hazardous Materials

⚠CAUTION

Prolonged or repeated contact with used motor oil may be harmful to skin and could cause skin cancer. Promptly wash affected areas with soap and water. (00358b)

Maintenance

⚠WARNING

Perform the service and maintenance operations as indicated in the regular service interval table. Lack of regular maintenance at the recommended intervals can affect the safe operation of your motorcycle, which could result in death or serious injury. (00010a)

- A new motorcycle must be operated according to the special break-in procedure. See Break-In Riding Rules.
- Proper care and maintenance, including tire pressure, tire condition, tread depth and proper adjustment to steering head bearings are important to stability and safe operation of the motorcycle. Refer to Regular Service Intervals: 2016 Harley-Davidson Street Models.

Parts and Accessories

⚠WARNING

Harley-Davidson parts and accessories are designed for Harley-Davidson motorcycles. Using non-Harley-Davidson parts or accessories can adversely affect performance, stability or handling, which could result in death or serious injury. (00001b)

- Use only Harley-Davidson approved parts and accessories. Use of certain other manufacturer's performance parts will void your new motorcycle warranty. See your Harley-Davidson dealer for details.

⚠WARNING

Use Harley-Davidson replacement fasteners. Aftermarket fasteners can adversely affect performance, which could

result in death or serious injury. (00013a)

- See your Harley-Davidson service manual for proper torque values.
- Aftermarket fasteners may not have the specific property requirements to perform properly.

⚠WARNING

See the Accessories and Cargo section in your owner's manual. Improper cargo loading or accessory installation can cause component failure and adversely affect stability, handling and performance, which could result in death or serious injury. (00021b)

- Harley-Davidson Motor Company cannot test and make specific recommendations concerning every accessory or combination of accessories sold. Therefore, the rider must be responsible for safe operation of the motorcycle when installing accessories or carrying additional weight.
- Additional electrical equipment may overload the electrical system possibly resulting in electrical system and/or component failure.

Labels

See Labels for safety and maintenance labels which were on the vehicle when new. Refer to Labels.

NOTE:

Some labels are available in different languages for destinations outside the United States.

Replacement labels can be purchased for your motorcycle. See a Harley-Davidson dealer.

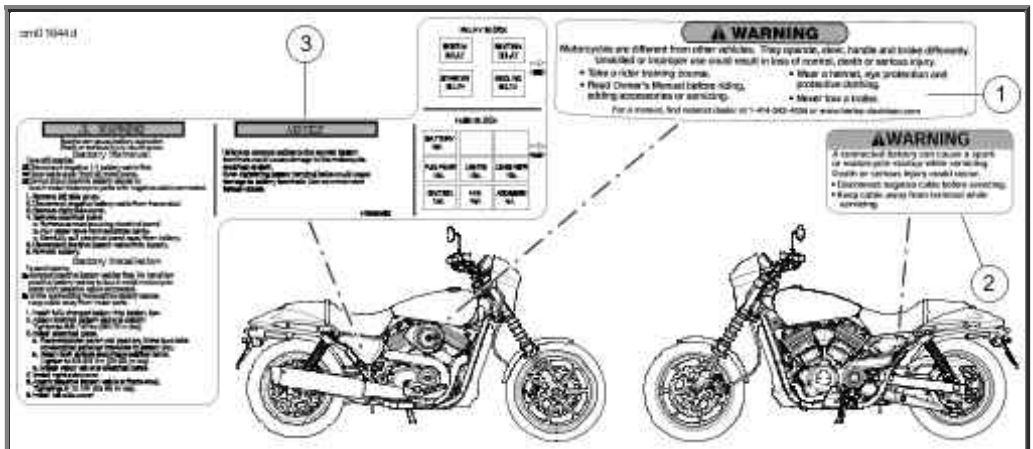

Labels

Labels

ITEM	PART NUMBER	DESCRIPTION	TEXT
1	29147-07	General warning	WARNING: Motorcycles are different from other vehicles. They operate, steer, handle and brake differently. Unskilled or improper use could result in loss of control, death or serious injury.

			• Take a rider training course. • Read Owner's Manual before riding, adding accessories or servicing. • Wear a helmet, eye protection and protective clothing. • Never tow a trailer. For a manual, find nearest dealer at 1-414-343-4056 or www.harley-davidson.com
2	15368-01A	Battery warning	WARNING: A connected battery can cause a spark or motorcycle startup while servicing. Death or serious injury could occur. • Disconnect negative cable before servicing. • Keep cable away from terminal while servicing.
3	14000593	Battery warning/Removal and Installation	WARNING: Sparks can cause battery explosion. Death or serious injury could occur. To avoid sparks: • Disconnect negative cable first. • Keep cable away all metal parts. • Do not allow positive battery cable to touch metal motorcycle parts with negative cable connected.

Your Motorcycle

Vehicle Identification Number (VIN)

General

A unique 17-digit serial or Vehicle Identification Number (VIN) is assigned to each motorcycle. Refer to Harley-Davidson VIN Breakdown: 2016 Street Models.

Location

See VIN Locations. The full 17-digit VIN is stamped (1) on the right side of the frame near the steering head. In some destinations, a printed VIN label (2) is also attached on the front downtube.

Abbreviated VIN

The abbreviated VIN shows the vehicle model, engine type, model year and sequential number. The abbreviated VIN is stamped on the left side of the crankcase between the engine cylinders.

NOTE:

Always give the full 17-digit Vehicle Identification Number when ordering parts or making any inquiry about your motorcycle.

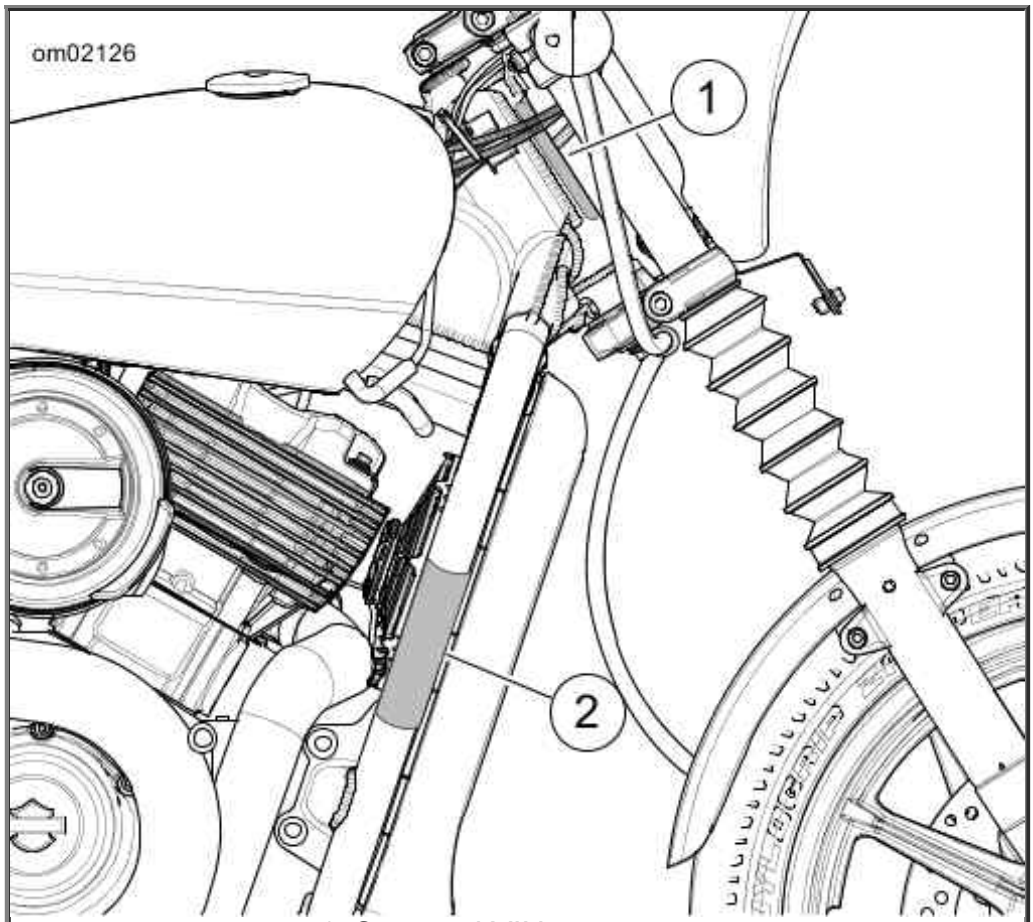

1. Stamped VIN
2. VIN label

VIN Locations

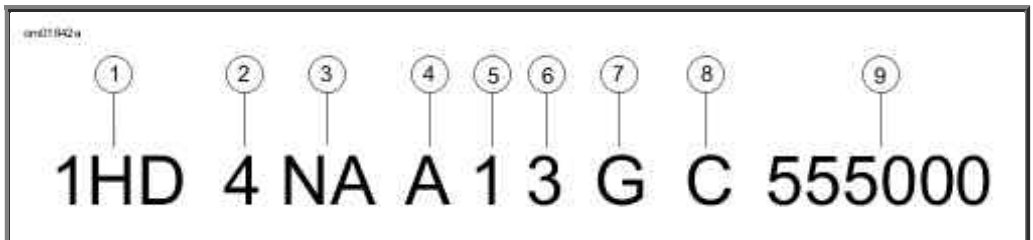

Typical Harley-Davidson VIN: 2016 Street Models

Harley-Davidson VIN Breakdown: 2016 Street Models

POSITION	DESCRIPTION	POSSIBLE VALUES	
1	World manufacturer identifier	1HD=Originally manufactured in the United States 5HD=Originally manufactured in the United States for sale outside the United States MEG=Originally manufactured in India	
2	Motorcycle type	4=Middleweight motorcycle (351 cm^3 to 900 cm^3)	
3	Model	NA=XG500 NB=XG750	
4	Engine type	A=Revolution X^{TM} 500 cm^3 liquid-cooled, fuel-injected B=Revolution X^{TM} 750 cm^3 liquid-cooled, fuel-injected	
5	Configuration/calibration,	**Normal Introduction**	**Mid-year or Special Introduction**

	introduction	1=Domestic (DOM) 3=California (CAL) A=Canada (CAN) C=HDI E=Japan (JPN) G=Australia (AUS) J=Brazil (BRZ) L=Asia Pacific (APC) N=India (IND)	2, 4=Domestic (DOM) 5, 6=California (CAL) B=Canada (CAN) D=HDI F=Japan (JPN) H=Australia (AUS) K=Brazil (BRZ) M=Asia Pacific (APC) P=India (IND)
6	VIN check digit	Can be 0-9 or X	
7	Model year	G=2016	
8	Assembly plant	C=Kansas City, MO U.S.A. N=Haryana India (Bawal District Rewari)	
9	Sequential number	Varies	

Primary Controls and Service Components

Familiarize yourself with the location of all the controls and service components on your motorcycle.

NOTES:

Harley-Davidson reserves the right to change specifications, equipment or designs at any time without notice and without incurring obligation.

See Controls and Service Components for rider controls and service components accessible when seated.

See Controls and Service Components for rider controls and service components accessible from the right.

See Controls and Service Components for rider controls and service components accessible from the left.

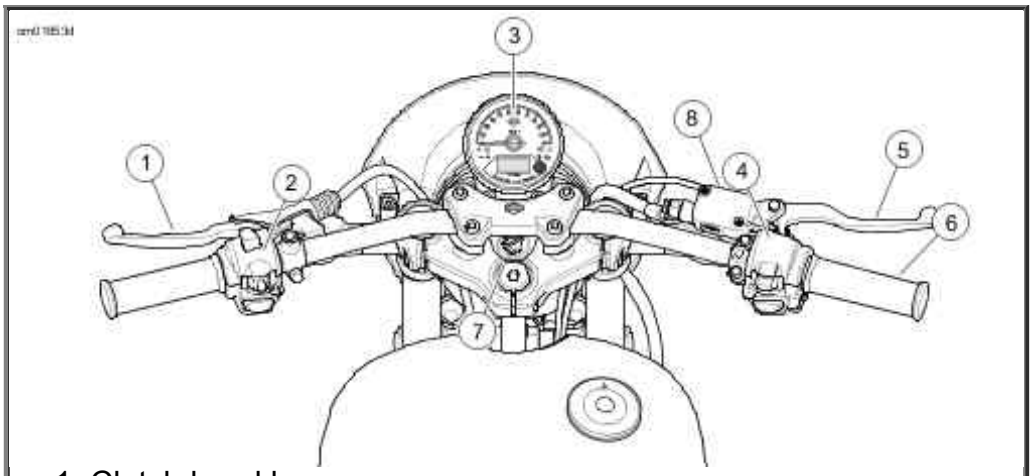

1. Clutch hand lever
2. Left hand control module
3. Speedometer/odometer
4. Right hand control module
5. Front brake lever
6. Throttle twist grip
7. Ignition switch
8. Front brake fluid reservoir

Controls and Service Components

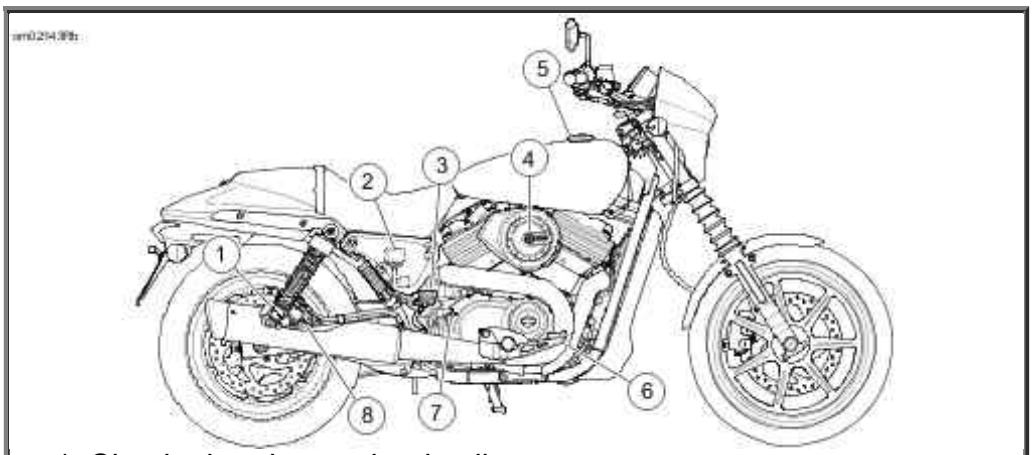

1. Shock absorber preload collar
2. Fuse block/main fuse (under side cover)
3. Rear brake fluid reservoir
4. Air cleaner
5. Gas cap
6. Rear brake pedal
7. Oil filler dipstick
8. Rear brake caliper

Controls and Service Components

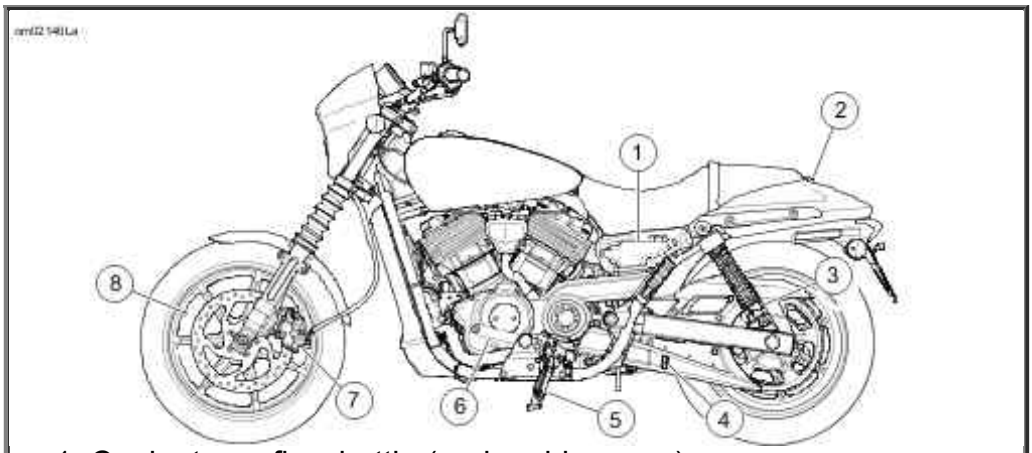

1. Coolant overflow bottle (under side cover)
2. Seat retention screw
3. Shock absorber preload collar
4. Belt tension window
5. Jiffy stand
6. Gear shift lever
7. Front brake caliper
8. Air pressure valve

Controls and Service Components

Before Riding

Removing Motorcycle from Storage

1. Charge and install the battery. See Battery Maintenance.
2. Inspect spark plugs. See Replacing Spark Plugs.
3. Inspect air filter and replace if necessary. See Inspecting Air Filter.
4. Inspect drive belt and sprocket. See Checking Drive Belt and Sprockets.
5. Perform the items in the Pre-Ride Checklist.

Pre-Ride Checklist

1. Check the amount of fuel in the tank. Add fuel if required. See Filling the Fuel Tank.
2. Adjust mirrors to proper riding positions. See Adjusting Mirrors.
3. Check the engine oil level. See Checking Engine Oil Level.
4. Check the coolant level. See Coolant.
5. Check brake fluid level. See Checking Brake Fluid Level and Changing Brake Fluid.
6. Inspect brake pads and discs for wear. See Inspecting Brake Pads and Discs.
7. Check the hand and foot controls to be sure they are operating properly. Operate the front and rear brakes, throttle, clutch and shifter. See Operation.

8. Check throttle and brake cables for wear or damage.

9. Check steering for smoothness by turning the handlebar through the full operating range.

⚠WARNING

Be sure tires are properly inflated, balanced, undamaged, and have adequate tread. Inspect your tires regularly and see a Harley-Davidson dealer for replacements. Riding with excessively worn, unbalanced, improperly inflated, overloaded or damaged tires can lead to tire failure and adversely affect stability and handling, which could result in death or serious injury. (00014b)

10. Check tire condition, pressure and motorcycle loading. Refer to tire specifications on Tires and Tire Pressure for correct inflation pressure. Refer to Weights for weight allowances.

11. Check rear shock settings. Adjust if necessary. See Adjusting Shock Absorbers.

12. Check for any fuel, oil, coolant or hydraulic fluid leaks.

13. Check drive belt tension. See Checking Drive Belt and Sprockets.

⚠WARNING

Be sure headlamp, tail and stop lamp and turn signals are operating properly before riding. Poor visibility of rider to other motorists can result in death or serious injury. (00478b)

14. Check all electrical equipment and switches including the stop lamp, turn signals and horn, for proper operation.

15. Service your motorcycle as necessary.

Break-In Riding Rules

The First 800 Kilometers (500 Miles)

The sound design, quality materials, and workmanship that are built into your new Harley-Davidson will give you optimum performance.

To allow your engine to break-in in its critical parts, we recommend that you observe the riding rules provided below for the first 500 mi 800 km . Adhering to these rules will promote future durability and performance of the motorcycle.

1. During the first 50 mi 80 km of riding, keep the engine speed below 5000 rpm in any gear. Do not labor the engine by running or accelerating at very low RPM, or by running at high rpm longer than needed for shifting or passing.

2. Up to 500 mi 800 km , vary the engine speed and avoid operating at any steady engine speed for long periods. Engine speed up to 7000 rpm in any gear is permissible.

3. Drive slowly and avoid fast starts at wide open throttle until the engine has warmed up.
4. Avoid hard braking. **New** brakes need to be worn in by moderate use for the first 100 mi 160 km .

Filling the Fuel Tank

⚠WARNING

Avoid spills. Slowly remove filler cap. Do not fill above bottom of filler neck insert, leaving air space for fuel expansion. Secure filler cap after refueling. Gasoline is extremely flammable and highly explosive, which could result in death or serious injury. (00028a)

⚠WARNING

Use care when refueling. Pressurized air in fuel tank can force gasoline to escape through filler tube. Gasoline is extremely flammable and highly explosive, which could result in death or serious injury. (00029a)

Remove Fuel Filler Cap

1. See Fuel Filler Cap. Insert the ignition key into the key slot (2).

   NOTE:

   The cap pops up as the key is turned.

2. Turn the key clockwise.
3. Remove the filler cap.

CAUTION

Do not spill fuel onto the motorcycle while refueling. Immediately wipe up fuel spills on your motorcycle. Fuel can cause damage to cosmetic surfaces. (00147b)

4. Fill the tank. Use only recommended fuel. See Fuel System Information.

Install Fuel Filler Cap

⚠WARNING

Do not use aftermarket fuel caps. Aftermarket fuel caps may fit improperly and leak, which could lead to death or serious injury. See a Harley-Davidson dealer for approved fuel caps. (00034a)

NOTE:

The arrow on the cap points to an index tab on the cap. The index tab aligns with a slot in the fuel opening in the tank.

1. Install the fuel filler cap with alignment arrow (1) pointing toward the front.
2. Press down around the cap to compress the cap spring.
3. Turn the ignition key counterclockwise to lock the cap.

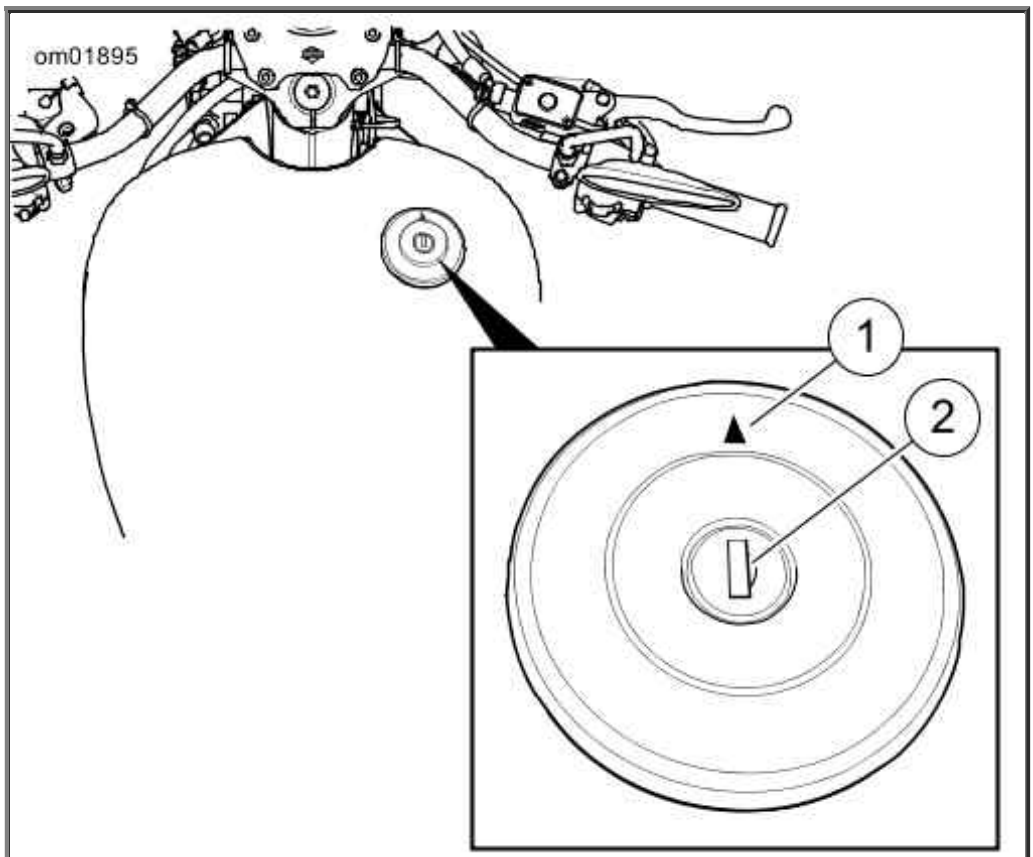

1. Alignment arrow
2. Key slot

Fuel Filler Cap

Fuel System Information

Gasoline

Your motorcycle was designed to get the best performance and efficiency using unleaded gasoline. Most gasoline is blended with alcohol and/or ether to create oxygenated blends. The type and amount of alcohol or ether added to the fuel is important.

CAUTION

Do not use gasoline that contains methanol. Doing so can result in fuel system component failure, engine damage and/or equipment malfunction. (00148a)

CAUTION

Use only unleaded fuel in catalytic converter-equipped motorcycles. Using leaded fuel will damage the emission control system. (00150b)

- Gasoline/METHYL TERTIARY BUTYL ETHER (MTBE) blends are a mixture of gasoline and as much as 15% MTBE. Gasoline/MTBE blends use in your motorcycle is approved.
- ETHANOL fuel is a mixture of ethanol (grain alcohol) and unleaded gasoline and can have an impact on fuel mileage. Fuels with an ethanol content of up to 10% may be used in your motorcycle without affecting vehicle performance. U.S. EPA regulations currently indicate that fuels with 15% ethanol (E15) are restricted from use in motorcycles at the time of this publication. Some motorcycles are calibrated to operate with higher ethanol concentrations to meet the fuel standards in certain countries.
- REFORMULATED OR OXYGENATED GASOLINES (RFG) describes gasoline blends that are specifically designed to burn cleaner than other types of gasoline. This results in fewer tailpipe emissions. They are also formulated to evaporate less when filling the tank. Reformulated gasolines use additives to oxygenate the gas. Your motorcycle will run normally using this type of fuel. Harley-Davidson recommends using it whenever possible as an aid to cleaner air in our environment.
- Do not use racing fuel or fuel containing methanol. Use of these fuels will damage the fuel system.
- The only octane booster Harley-Davidson recommends is SCREAMIN' EAGLE SUPER OCTANE BOOST (available only in the U.S.). This is the only octane booster that has been extensively tested and approved for use with Harley-Davidson engines and components.
- Some gasoline blends might adversely affect starting, driveability or fuel efficiency. If any of these problems are experienced, try a different brand of gasoline or gasoline with a higher octane blend.

Air entrapment and pressurization is a possibility.

Minimum Octane Ratings

SPECIFICATION	RATING
Pump Octane (R+M)/2	87 (91 RON)

Catalytic Converter

Vehicles in some markets are equipped with catalytic converters.

CAUTION

Do not operate catalytic converter-equipped vehicle with engine misfire. If you operate the vehicle under this condition, the exhaust will become abnormally hot, which can cause vehicle damage, including emission control loss. (00149c)

Adjusting Mirrors

⚠WARNING

Objects in mirrors are closer than they appear. Use caution when judging distance of objects in mirrors. Failure to judge correct distances could result in death or serious injury. (00033a)

Adjust mirrors so you can see a small portion of your shoulders in each mirror. This will help you establish the relative distance of vehicles to the rear of your motorcycle.

Operating Jiffy Stand

Location

⚠WARNING

Be sure jiffy stand is fully retracted before riding. If jiffy stand is not fully retracted, it can contact the road surface causing a loss of vehicle control, which could result in death or serious injury. (00007a)

See Controls and Service Components. The jiffy stand (5) is located on the left side of the motorcycle.

Jiffy Stand Switch: International Models

Some international models have a jiffy stand interlock switch.

The motorcycle will start and run with the jiffy stand down while the transmission is in neutral. If the jiffy stand is down and the transmission in gear, engaging the clutch stalls the motorcycle. Raising the jiffy stand or putting the transmission in neutral will permit the engine to run.

If the jiffy stand lowers at a speed greater than 10 mph 15 km/h , the engine will continue to run and the rider may continue to ride while in this mode.

⚠WARNING

Always park motorcycle on a level, firm surface. An unbalanced motorcycle can fall over, which could result in death or serious injury. (00039a)

Adjusting Shock Absorbers

General

Adjust the rear shock absorber spring preload for the weight the motorcycle is to carry. Notice the adjustment settings as you turn the collar.

Adjust both shocks the same number of turns.

Adjustment

⚠WARNING

Adjust both shock absorbers equally. Improper adjustment can adversely affect stability and handling, which could result in death or serious injury. (00036b)

CAUTION

Do not turn the shock absorber adjustment collar clockwise beyond adjustment setting 5. Doing so may result in equipment damage. (00166b)

NOTE:

See Shock Absorber Preload Adjustment. Do not turn the preload cam from position five (5) to position one (1) or from position one (1) to position five (5).

1. Put the SPANNER WRENCH HD-51439 around the lower collar of the shock absorber.
2. Turn the spring adjusting cam to the desired position. When returning to off-cam position, back the cams off in the opposite direction.
    a. Turn the collar toward higher numbers to increase the preload. Refer to Recommended Shock Preload: Five Position.
    b. Turn the collar toward the lower numbers to decrease the preload.

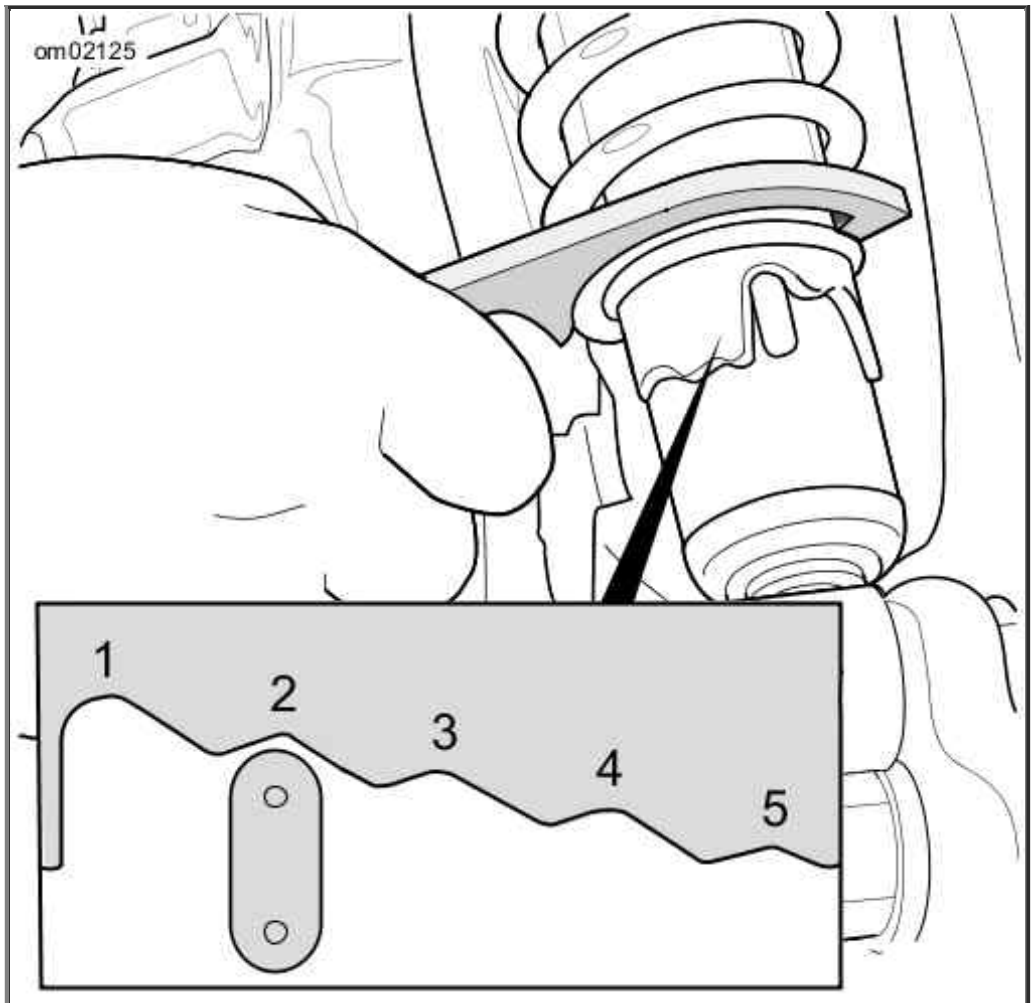

Shock Absorber Preload Adjustment

Recommended Shock Preload: Five Position

LOAD*	POSITION
Less than 165 lb 75 kg	1
165-195 lb 75-89 kg	2
195-225 lb 89-102 kg	3
225-255 lb 102-116 kg	4
255 lb 116 kg to maximum added weight allowed.	5
* Add the weight of the rider, passenger, riding gear, accessories, and cargo.	

Maximum Added Weight Allowed

MODEL	MAX LOAD	
	kg	lb
XG500	209	461
XG750	209	461

Operation

Controls, Instruments and Switches

Clutch Hand Lever

⚠WARNING

Do not position fingers between hand control lever and handlebar grip. Improper hand positioning can impair control lever operation and cause loss of vehicle control, which could result in death or serious injury. (00032a)

See Controls and Service Components. The clutch hand lever (1) is operated with the fingers of the left hand. See Shifting Gears.

Gear Shift Lever

See Shift Pattern and Shift Lever. The gear shift lever is operated with the left foot. Neutral is found between first and second gear in the six speed shift pattern. See Shifting Gears.

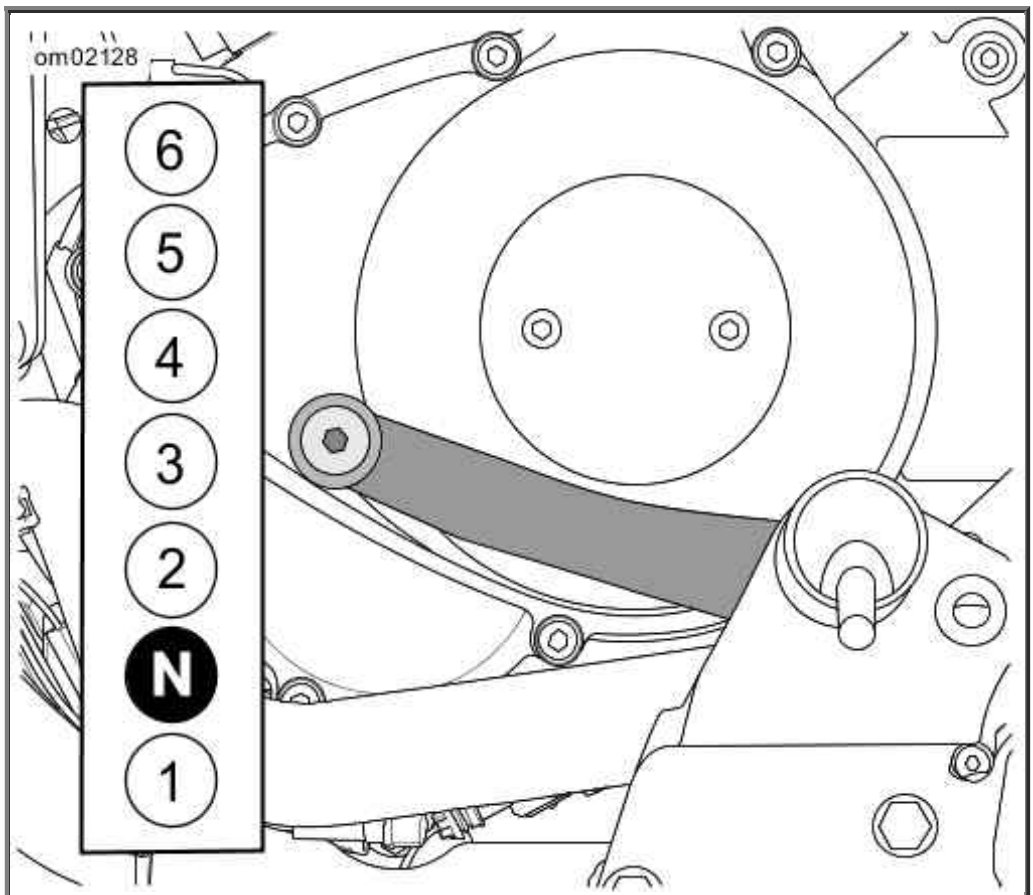

Shift Pattern and Shift Lever

Left-Hand Control Module

See Controls and Service Components. Operate the switches on the left hand control module (2) with the thumb of the left hand. See Left Hand Control Switches.

Speedometer/Odometer

See Controls and Service Components. The current road speed is displayed in the speedometer (3). The accumulated mileage and individual trip mileage is displayed in the odometer window in the face of the speedometer. See Instruments.

Right-Hand Control Module

See Controls and Service Components. Operate the switches on the right hand control module (4) with the thumb of the right hand. See Right Hand Control Switches.

Brakes

⚠WARNING

Do not position fingers between hand control lever and handlebar grip. Improper hand positioning can impair control lever operation and cause loss of vehicle control, which could result in death or serious injury. (00032a)

Front brake lever: See Controls and Service Components. The front brake lever (5) controls the front brake. Operate the hand lever with the fingers of the right hand.

Rear brake pedal: See Controls and Service Components. The rear brake pedal (6) activates the rear wheel brake.

⚠WARNING

Do not apply brake strongly enough to lock the wheel. A locked wheel will skid and can cause loss of vehicle control, which could result in death or serious injury. (00053a)

Apply brakes evenly to prevent wheels from locking up. A balance between rear and front brake is best.

Throttle Twist Grip

Accelerate: See Controls and Service Components. Slowly twist throttle twist grip (6) backward (toward rear of motorcycle) to open the throttle.

Decelerate: Slowly twist throttle control grip forward (toward the front) to close the throttle.

Ignition Switch

NOTE:

Required by law, the headlamp and tail lamps operate when the switch is in the IGNITION position.

See Controls and Service Components. Unlock the ignition switch (7) with the ignition key. Rotate the switch to the desired position. Refer to Ignition Switch and Fork Lock.

To start the engine, see Starting the Engine.

Fork Lock

CAUTION

Turn the ignition switch to the OFF position before locking the motorcycle. Leaving the switch in the ACC position will keep the instrument lights on and result in a discharged battery. (00492b)

CAUTION

Protect your vehicle against theft. After parking your motorcycle, lock the steering head and ignition switch. Failure to lock your motorcycle can result in theft and/or equipment damage. (00491c)

See Ignition and Fork Lock Switch. Park your motorcycle. Use the fork lock to discourage theft or unauthorized use. Refer to Ignition Switch and Fork Lock.

1. Turn the fork full left.
2. Insert the key into the switch.
3. Push the key in and turn to LOCK.
4. Remove the key.

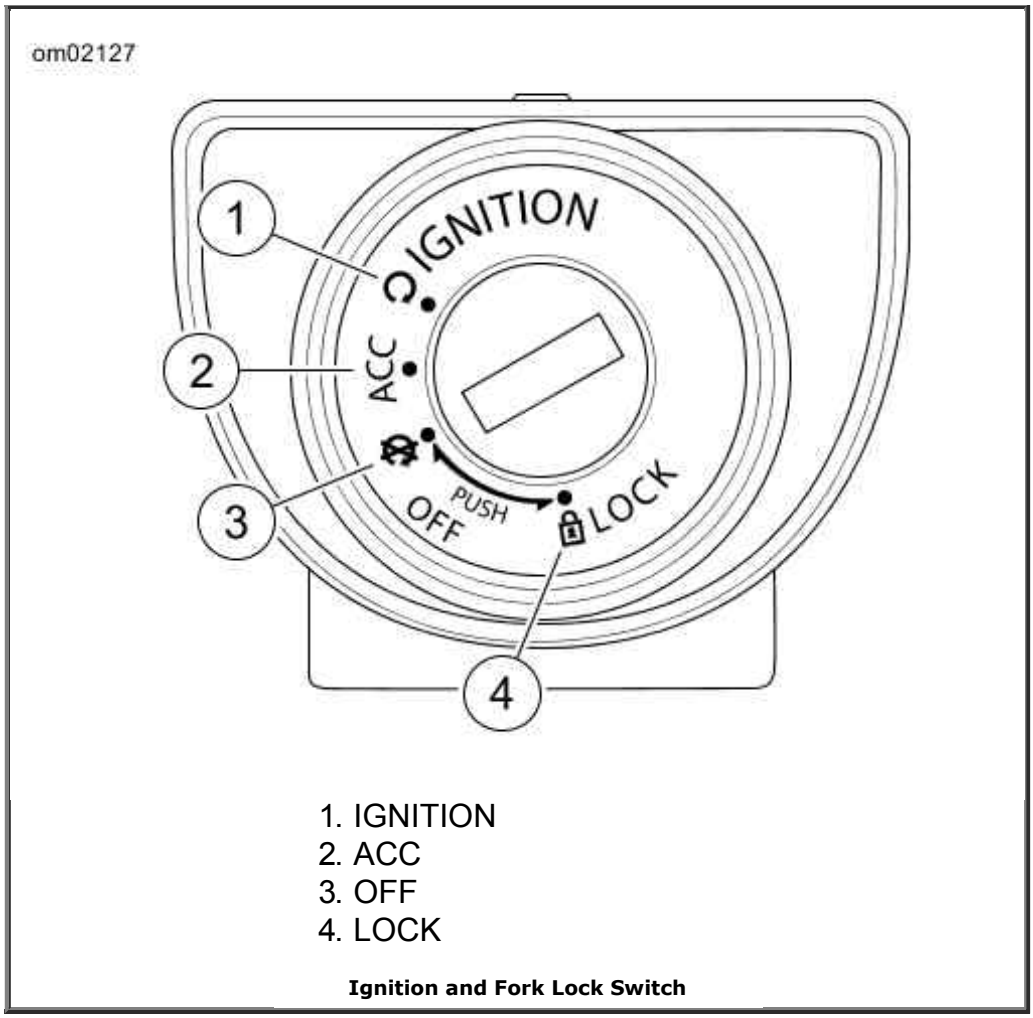

Ignition and Fork Lock Switch

Ignition Switch and Fork Lock

SWITCH	NAME	FUNCTION
	ACC	Turns on accessories. Instrument lamps are on. Brake lamp and horn can be activated.
	IGNITION	Turns on ignition, lamps and accessories. The engine will start and run.
	LOCK	Front fork locked.
	OFF	Turns off ignition, lamps and accessories. Motorcycle is turned off and cannot be started.
	PUSH	Push to lock the front fork.

Instruments

Speedometer

See Speedometer. The speedometer is calibrated in miles per hour, (mph) (1), kilometer per hour (km/h) (2) or is calibrated in miles per hour and kilometers per hour (3).

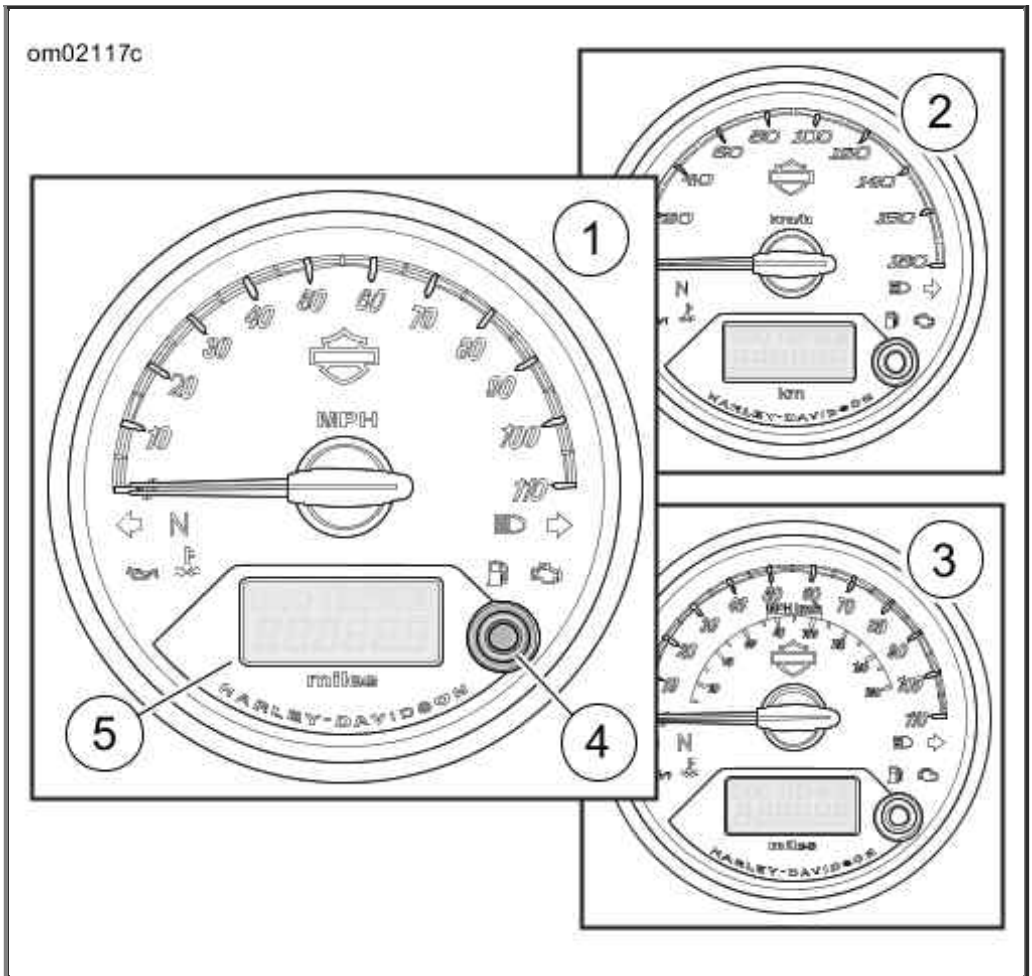

1. mph
2. km/h
3. mph/km/h
4. Odometer toggle
5. Odometer

Speedometer

Odometer

See Odometer. Use the odometer toggle switch to toggle between the total odometer (1), trip odometer A (2) and trip odometer B (3).

To reset a trip odometer to zero, press and hold the toggle switch.

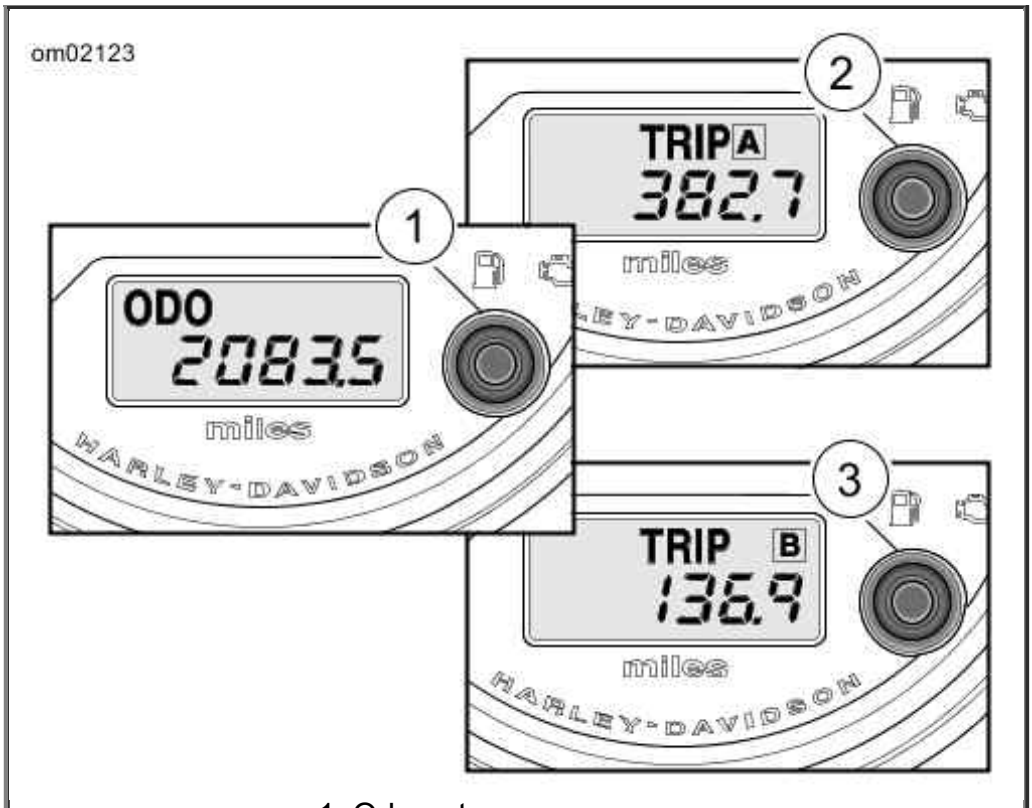

1. Odometer
2. Trip A
3. Trip B

Odometer

Left Hand Control Switches

High Beam

⚠WARNING

The automatic-on headlamp feature provides increased visibility of the rider to other motorists. Be sure headlamp is on at all times. Poor visibility of rider to other motorists can result in death or serious injury. (00030b)

See Left Hand Control Switches. Press the high beam switch (1) to select the headlamp high beam.The high beam indicator illuminates when the high beam is on. Refer to Left Hand Control Switches.

Low Beam

See Left Hand Control Switches. Press the low beam switch (2) to select the headlamp high beam. Refer to Left Hand Control Switches.

Left Turn

See Left Hand Control Switches. Press the turn signal switch left to activate the left turn signal.

The signal flashes until it is manually canceled. To cancel, push the center button to center detent. Refer to Left Hand Control Switches.

Right Turn

See Left Hand Control Switches. Press the turn signal switch right to activate the right turn signal. The signal flashes until it is manually canceled. To cancel, push the center button to center detent. Refer to Left Hand Control Switches.

Horn

See Left Hand Control Switches. Press the horn switch to sound the horn. Refer to Left Hand Control Switches.

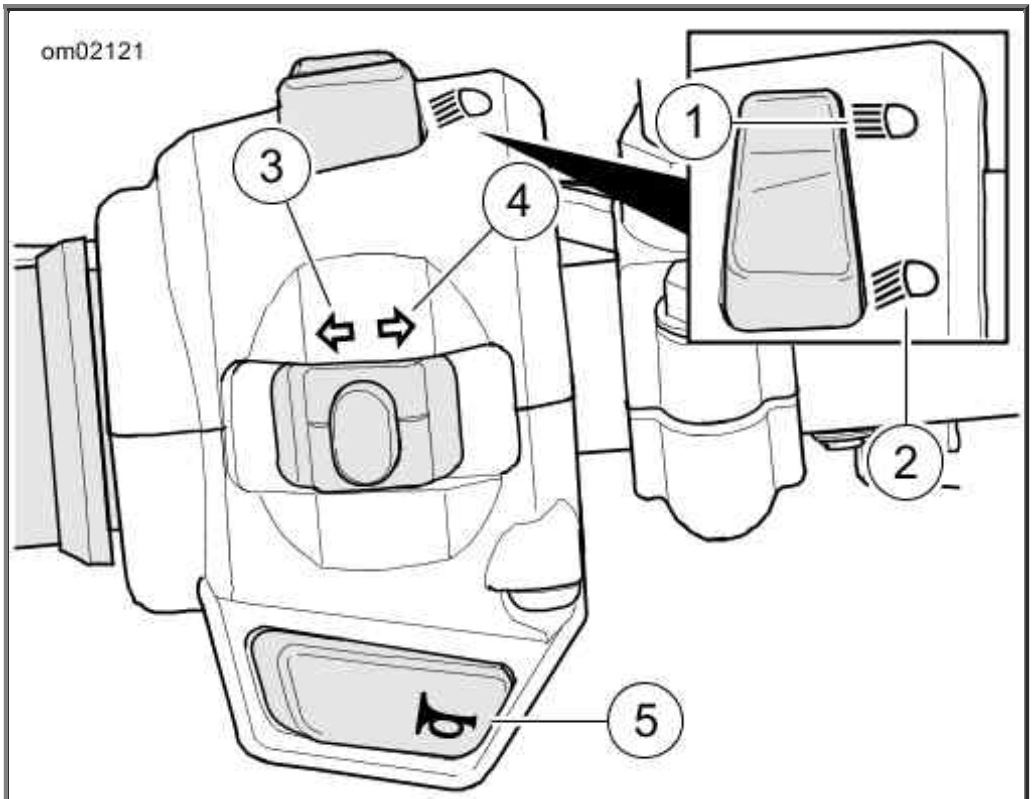

1. High beam
2. Low beam
3. Left turn
4. Right turn
5. Horn

Left Hand Control Switches

Left Hand Control Switches

SWITCH	NAME	FUNCTION
	High beam	Press the switch to switch the headlamp to high beam.
	Low beam	Press the switch to switch the headlamp to low beam.
	Left turn	Press the switch to the left to activate the left turn signal.
	Right	Press the switch to the right to activate

	Right turn	Press the switch to the right to activate the right turn signal.
	Horn	Press the switch to sound the horn.

Right Hand Control Switches

Off

See Right Hand Control Switches. Press the off/run switch to off (1) to turn off the engine. With the off/run switch in the off position, the engine cannot start or run. With the off/run switch in the run position, the engine starts and runs. Refer to Right Hand Control Switches.

Run

See Right Hand Control Switches. Press the off/run switch to run (2) to turn on the electrical circuits to the engine. With the off/run switch in the run (2) position, the engine starts and runs. Refer to Right Hand Control Switches.

Start

See Right Hand Control Switches. With the off/run switch in run, press the start switch (3) to start the engine. Refer to Right Hand Control Switches.

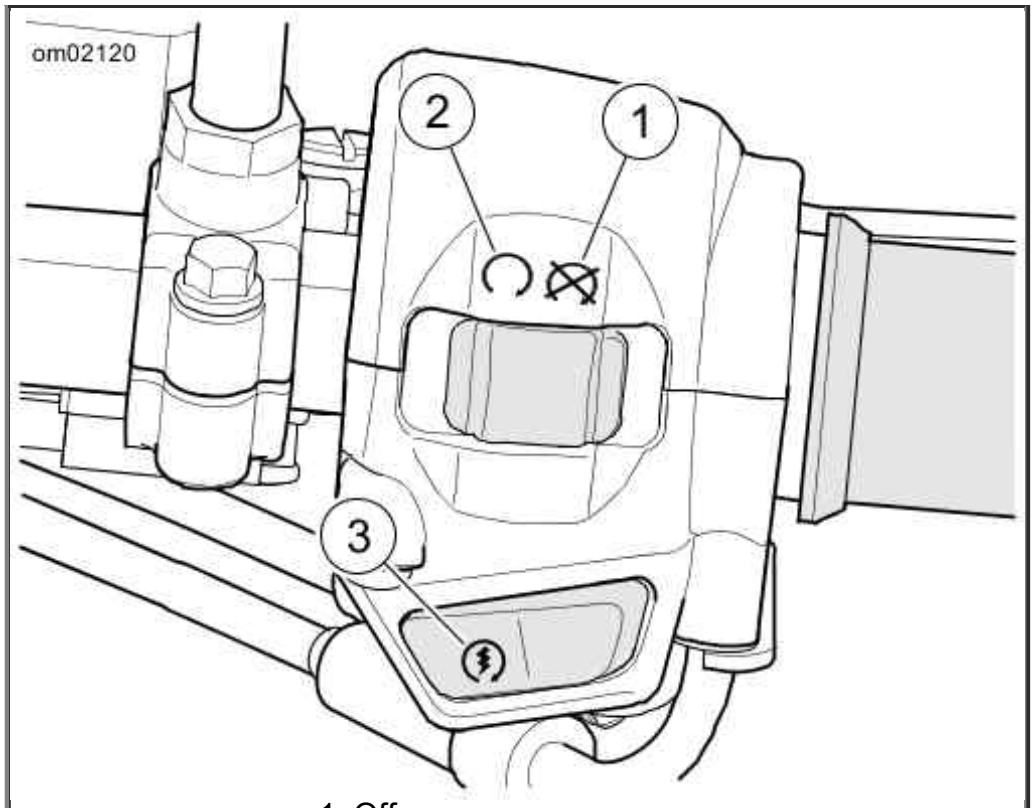

1. Off
2. Run
3. Start

Right Hand Control Switches

Right Hand Control Switches

SWITCH	NAME	FUNCTION
	Run	Press the switch to the run position to allow the engine to run.
	Off	Press the switch to the off position to stop the engine or to prevent the engine from starting.
	Start	Press the switch to start the engine.

Indicators

See Indicator Lights. Indicator lights in the speedometer face illuminate to indicate the status of the associated motorcycle function. Refer to Indicator Lights.

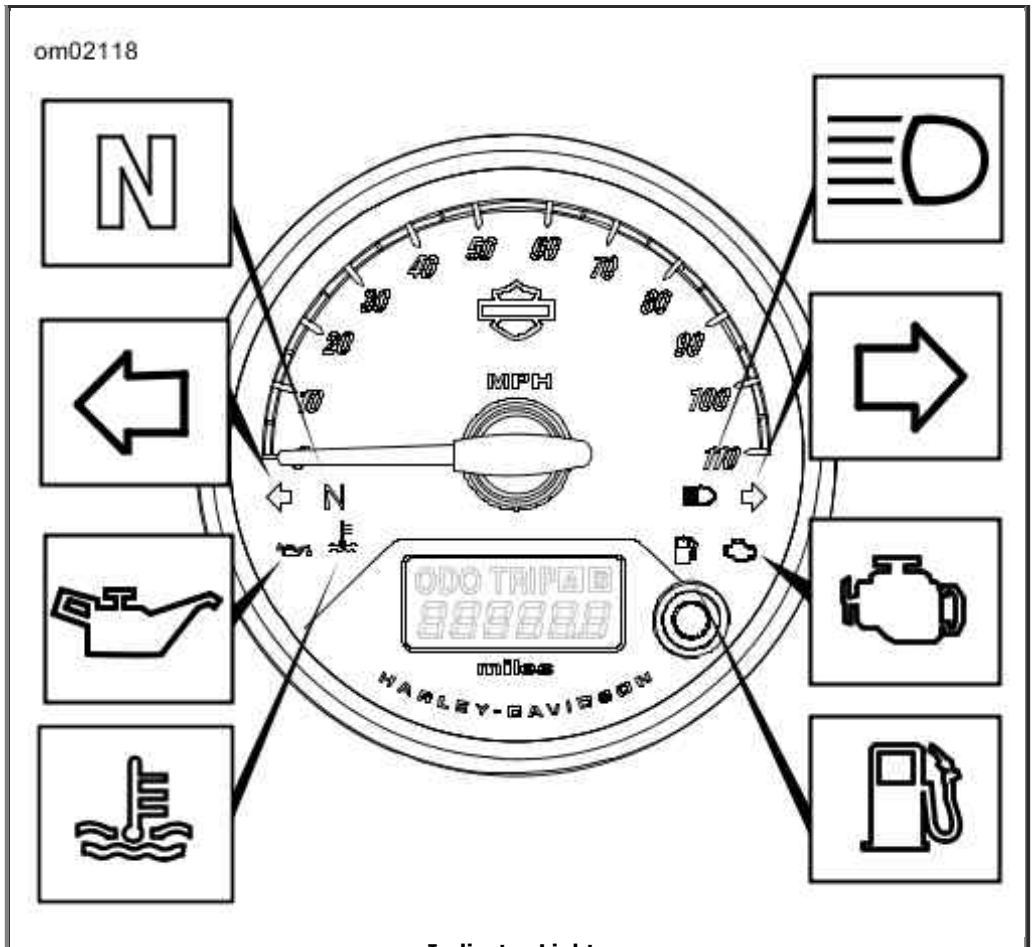

Indicator Lights

Indicator Lights

ICON	NAME	FUNCTION
	Neutral	Illuminates when transmission is in neutral.
	Left turn	Flashes when turn signal switch is activated for a left turn. Push center button on turn signal switch to cancel.
	Oil pressure	If indicator remains lit, stop engine and check oil level.
	Coolant temperature	Illuminates when temperature exceeds a safe maximum.
	High beam	Illuminates when high beams are on. Press the low beam switch to switch to low beam.
	Right turn	Flashes when turn signal switch is activated for a right turn. Push center button on turn signal switch to cancel.
	Check engine	Illuminates briefly when ignition switch is in IGNITION or ACC position. If indicator illuminates at any other time, see a Harley-Davidson dealer for diagnostic assistance.
	Low fuel	Illuminates when fuel level is at

		approximately 0.8 gal 3.1 L or less. Fill with recommended fuel as soon as possible.

Starting the Engine

⚠WARNING

Before starting engine, be sure throttle control will snap back to idle position when released. A throttle control that prevents engine from automatically returning to idle can lead to loss of control, which could result in death or serious injury. (00390a)

1. Verify that the motorcycle is in neutral.
2. Press the engine off/run switch to the run position.
3. Turn ignition switch to IGNITION. Do not twist the throttle.

   NOTE:

   The engine lamp will light for approximately 4 seconds and the fuel pump will run for approximately 2 seconds.

4. Squeeze the clutch lever in against the handgrip.
5. Press the start switch.

   NOTE:

   If engine does not start, verify engine off/run switch is in run position.

CAUTION

The engine should be allowed to run slowly for 30-60 seconds. This will allow the engine to warm up and let oil reach all surfaces needing lubrication. Failure to comply can result in engine damage. (00181b)

6. Raise the jiffy stand before beginning forward movement.

Starting after Tip Over

⚠WARNING

If tip occurs, check all controls for proper operation. Restricted control movement can adversely affect the performance of the brakes, clutch or ability to shift, which could result in loss of vehicle control and death or serious injury. (00350a)

After a tip over, reset the ignition before starting the engine.

1. Set the motorcycle upright.
2. Reset the ignition by turning the ignition switch OFF-IGNITION.

Shifting Gears

Finding Neutral

NOTE:

If the gears do not disengage when the engine is off, with the clutch engaged rock the motorcycle backward and forward while pressing or lifting the shift lever.

Neutral is between first and second gear. Select neutral by either a half lift from first gear or a half press from second gear.

Starting from a Stop

CAUTION

The clutch must be fully disengaged before attempting a gear shift. Failure to fully disengage the clutch can result in equipment damage. (00182a)

NOTE:

Partially open the throttle so the engine does not drag when the clutch lever is released.

1. With the engine running and the jiffy stand retracted, squeeze the clutch lever in against the handlebar grip to disengage the clutch.

   NOTE:

   Always start forward motion in first gear.

2. Press the gear shift lever down to end of its travel and release. The transmission is now in first gear.
3. Ease out the clutch lever and at the same time, gradually open the throttle.

Upshift (Acceleration)

NOTE:

Disengage the clutch completely before each gear change.

See Upshift Pattern. Shift to the next higher gear when the motorcycle reaches the shifting speed. Refer to Recommended Upshift Speeds.

1. Close the throttle.
2. Slowly pull clutch hand lever in against handlebar grip to fully disengage clutch.

3. Lift the gear shift lever up to the end of its travel and release.
4. Ease out the clutch lever and, at the same time, gradually open the throttle.
5. Repeat the previous steps to engage remaining gears.

Recommended Upshift Speeds

GEAR CHANGE	mph	km/h
First to second	15	25
Second to third	25	40
Third to fourth	35	55
Fourth to fifth	45	70
Fifth to sixth	55	85

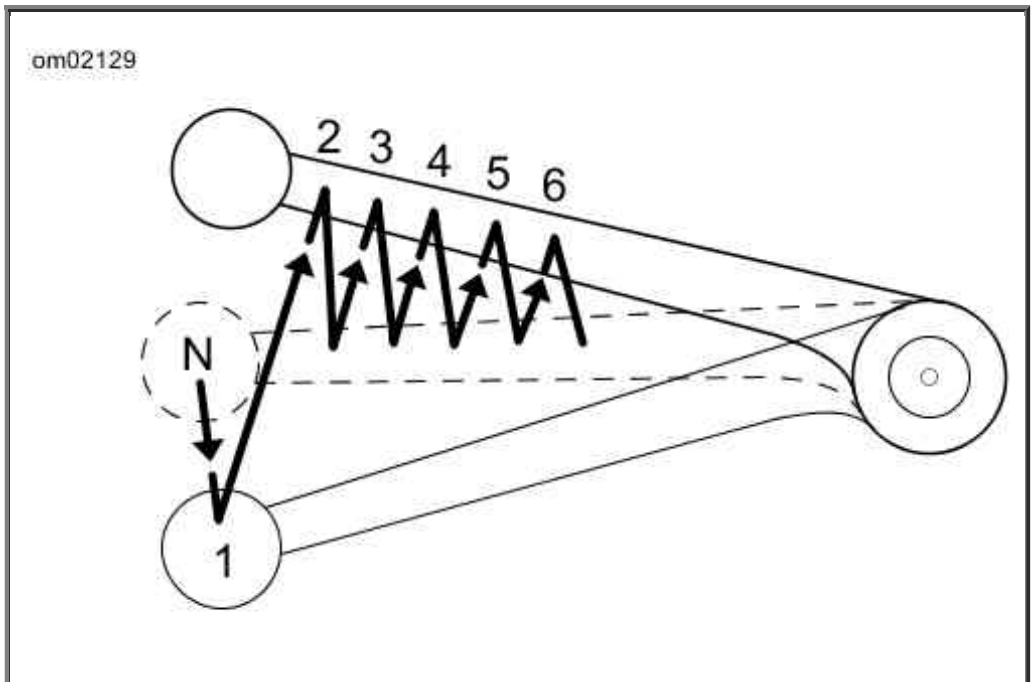

Upshift Pattern

Downshift (Deceleration)

⚠WARNING

Do not downshift at speeds higher than those listed. Shifting to lower gears when speed is too high can cause the rear wheel to lose traction and lead to loss of vehicle control, which could result in death or serious injury. (00045b)

See Downshift Pattern. When engine speed decreases, as when climbing a hill or slowing for a turn, shift to the next lower gear. Refer to Recommended Downshift Speeds.

1. Close the throttle.

2. Slowly pull clutch hand lever in against handlebar grip to fully disengage clutch.
3. Press the gear shift lever down to the end of its travel and release.
4. Ease out the clutch lever and gradually open the throttle.
5. Repeat the previous steps to engage remaining gears.

CAUTION

Shift to neutral before stopping engine. Shifting mechanism can be damaged by shifting gears while engine is stopped. (00183a)

The gear shifter mechanism permits shifting the transmission to neutral from either first or second gear.

Recommended Downshift Speeds

GEAR CHANGE	mph	km/h
Sixth to fifth	50	80
Fifth to fourth	40	65
Fourth to third	30	50
Third to second	20	30
Second to first	10	15

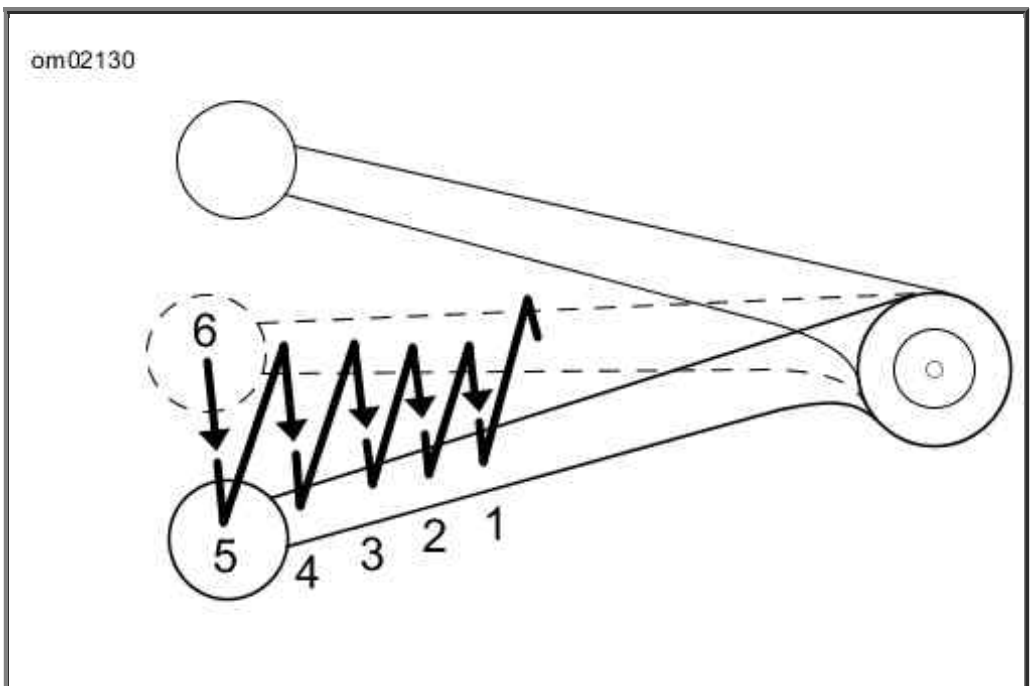

Downshift Pattern

Stopping the Engine

1. Push the off/run switch to off.
2. Turn ignition switch to off.

NOTE:

If the engine stalls or stops for any reason, turn the ignition switch off to prevent battery discharge.

After Riding

Storing Motorcycle

If the motorcycle will not be operated for several months, take steps to protect the motorcycle. Always protect parts against corrosion, preserve the battery and prevent the build-up of gum and varnish in the fuel before storage.

Make a list of everything you do and fasten it to a handlebar grip. When you take the motorcycle out of storage, this list is your reference/checklist to get your motorcycle in operating condition.

⚠WARNING

Do not store motorcycle with gasoline in tank within the home or garage where open flames, pilot lights, sparks or electric motors are present. Gasoline is extremely flammable and highly explosive, which could result in death or serious injury. (00003a)

1. Fill fuel tank. Add a gasoline stabilizer. Use one of the commercially available gasoline stabilizers and follow the manufacturer's instructions.
2. Warm motorcycle to operating temperature. Change oil and turn engine over to circulate the new oil. See Changing Engine Oil and Filter.
3. Prepare battery for storage. See Battery Maintenance.
4. Check and fill the cooling system. See Coolant.
5. To protect the body panels, engine, chassis and wheels from corrosion, follow the cosmetic care procedures before storage. See Cleaning and General Care.
6. Cover the motorcycle with a material such as light canvas that breathes. Plastic materials that do not breathe promote condensation and corrosion.

Cleaning and General Care

- Harley-Davidson cleaning products are tested extensively for use on motorcycle surfaces. These products are formulated to be compatible with one another. See a Harley-Davidson dealer to purchase recommended cleaning products. Refer to Recommended Cleaning and Care Products and Recommended Surface Care Products.
- Care, cleaning and protection of the vehicle surfaces is the responsibility of the owner.
- Clean and protect the cosmetic surfaces on your motorcycle as often as possible to inhibit rust and corrosion.
- Some painted finishes and other surfaces may be scratched if gravel, dirt or grime are rubbed across the surface during washing. Use clean towels and avoid rubbing sediment across gloss finishes.

- Do not use paper towels, cloth diapers or other materials with nylon fibers which can cause fine scratches to surfaces.
- For repair of scratched surfaces, see a Harley-Davidson dealer.

⚠WARNING

Observe warnings on labels of cleaning compounds. Failure to follow warnings could result in death or serious injury. (00076a)

⚠WARNING

Do not wash brake discs with cleaners containing chlorine or silicone. Cleaners containing chlorine and silicone can impair brake function, which could result in death or serious injury. (00077a)

CAUTION

Do not use a pressure washer to clean motorcycle. Using a pressure washer can result in equipment damage. (00489c)

CAUTION

Use of abrasive products or powered buffing equipment will cause permanent cosmetic damage to body panels. Use only recommended products and techniques outlined in this manual to avoid damaging body panels. (00245b)

Cleaning Wheels and Tires

NOTE:

Corrosion to wheels is not considered to be a defect in materials or workmanship.

- Wheels can corrode or be cosmetically damaged if they are not properly cleaned, polished and preserved.
- Harley-Davidson recommends that wheels be cared for weekly.
- Keep wheels clean from harsh chemicals, acid-based wheel cleaners, salt, and accumulated brake dust.
- After washing wheels with WHEEL & TIRE CLEANER, use the polish and sealing products according to the type of wheels on your motorcycle. Refer to Recommended Cleaning and Care Products.

Radiator

See Cleaning Radiator for important information regarding the cleaning of the radiator.

Recommended Cleaning Products

The following products are recommended for Harley-Davidson motorcycles, parts and accessories. Your motorcycle may not have all the components shown in the tables.

Recommended Cleaning and Care Products

PRODUCT PART NO.	PURPOSE	FRAME	BODY PANELS	WHEELS	DENIM FINISH	OTHER
BARE ALUMINUM WHEEL PROTECTANT - INDIVIDUAL WIPES 93600063	Corrosion control for bare aluminum surfaces.	No	No	Yes	No	"Burst" collection
BARE METAL POLISH 93600028 (U.S.) 93600083 (Non-U.S.)	Polishes non-clear coated polished aluminum or polished stainless steel surfaces.	As applicable				
BLACK LEATHER REJUVENATOR 93600033 (U.S.) 93600081 (Non-U.S.)	Rejuvenates black leather products so they look brand new.	No	No	No	No	Black leather goods
BOOT MARK REMOVER 93600001 (U.S.) 93600069 (Non-U.S.)	Removes boot marks from chrome exhaust components.	No	No	No	No	Exhaust system
BUG REMOVER 93600022 (U.S.) 93600075 (Non-U.S.)	Removes bugs from metal, plastic or painted surfaces. Also available as individual wipes (93600065).	Yes	Yes	Yes	Yes	
CHROME CLEAN & SHINE 93600031 (U.S.) 93600082 (Non-U.S.)	Shines chrome-plated surfaces and cleans brushed aluminum or stainless steel surfaces.	As applicable				
DENIM PAINT CLEANER	Waterless quick cleaner and detailer.	Yes	Yes	Yes	Yes	

93600064 (U.S.) 93600078 (Non-U.S.)						
ENGINE BRIGHTENER 93600002 (U.S.) 93600068 (Non-U.S.)	Rejuvenates wrinkle black engine finish.	No	No	No	No	Wrinkle black engines
GLAZE POLY SEALANT 93600026 (U.S.) 93600079 (Non-U.S.)	Provides a protective barrier for glossy paint surfaces and chrome.	Yes	Yes	As applicable	No	
GLOSS DETAILER 93600062 (U.S.) 93600073 (Non-U.S.)	Produces high gloss with UV protection. Allows chrome to breathe, unlike wax. Good for windshields. Also available as individual wipes (97401-10).	Yes	Yes	Yes	No	
HARLEY TRAVEL CARE KIT 93600007	Travel size cleaning and care products.	Yes	Yes	Yes	Yes	
LEATHER PROTECTANT 93600034 (U.S.) 93600080 (Non-U.S.)	Weatherproofs and preserves leather products.	No	No	No	No	Leather goods
QUICK WASH 93600012 (U.S.) 93600071 (Non-U.S.)	A quick wash for a lightly soiled motorcycle. Cleans all surfaces, sheeting action prevents spots.	Yes	Yes	Yes	Yes	
SCRATCH & SWIRL REPAIR 93600025 (U.S.) 93600074 (Non-U.S.)	Removes fine scratches and swirls.	Yes	Yes	No	No	
SEAT, SADDLEBAG & TRIM CLEANER	Cleans and conditions vinyl, leather and plastic. Use on seats, saddlebags, inner fairings	No	No	No	No	Seats, saddlebags and trim

93600010	and any other trim.					
SPRAY CLEANER & POLISH 93600029 (U.S.) 93600084 (Non-U.S.)	Aerosol quick cleaner and detailer. Reduces static attraction to dust. Works great for removing bugs.	Yes	Yes	Yes	No	
SUNWASH BIKE SOAP 93600023 (U.S.) 93600077 (Non-U.S.)	Thorough washing of all surfaces with a wash mitt. Reduces hard water spots when washing a motorcycle in the sun.	Yes	Yes	Yes	Yes	
WHEEL & TIRE CLEANER 93600024 (U.S.) 93600076 (Non-U.S.)	Removes brake dust and road grime from wheels, tires and whitewalls. Do not use on frames or anodized parts.	No	No	Yes	No	Black-coated exhaust pipes and mufflers
WINDSHIELD CLEANER 93600067	Quick windshield cleaner in convenient single use wipe.	Yes	Yes	No	No	Windshield
WINDSHIELD WATER REPELLENT 93600032 (Global)	Allows water to bead and dissipate from the windshield.	No	No	No	No	Windshield

Recommended Surface Care Products

PRODUCT PART NO.	PURPOSE
BUG EATER SPONGE 93600110	When paired with water and BUG REMOVER, the BUG EATER SPONGE breaks down and dissolves baked on bugs and road grime.
CLEANING BRUSH KIT 94844-10	Brush kit for detailing your motorcycle.
DETAILING SWABS 93600107	Large cotton swabs for cleaning crevices and detailed surfaces.
DISPOSABLE	Non-absorbent cloth for applying and buffing SWIRL & SCRATCH

DETAILING SOFT CLOTH 93600114	REPAIR and GLAZE POLY SEALANT to painted surfaces or chrome.
HARLEY WASH BUCKET 94811-10	Wash bucket with apron to hold your supplies. Includes GRIT GUARD insert.
HOG BLASTER MOTORCYCLE DRYER 94651-09 (120 V) 94865-09 (220 V)	Blows a stream of warm dry filtered air. Reduces streaks and water spots.
MICROFIBER DETAILING CLOTH 94663-02	Highly absorbent detailing cloth for polishing and sealing. Contains no nylon fibers.
SYNTHETIC DRYING CHAMOIS 94791-01	Extra-absorbent, non-streaking synthetic towel for drying. Dampen towel and wring out before using for greatest absorbency.
WASH MITT 94760-99	Absorbent wool-blended washing mitten.
WHEEL & SPOKE BRUSH 43078-99	Cone-shaped scrub brush for wheels.

Wheel Polish and Sealing Products

WHEELS	PRODUCT	DESCRIPTION
Anodized	GLAZE POLY SEALANT	Cleans surface, removes fine scratches. Provides a breathable sealant against acid, chemicals, salt and brake dust.
	GLOSS DETAILER	Seals and protects against harsh chemicals, salt and other sediments to prevent corrosion.
Bare aluminum	BARE ALUMINUM WHEEL PROTECTANT	Creates a protective coating for bare aluminum wheels to prevent oxidation. Individual wipe.
Chrome	CHROME CLEAN & SHINE	Non-abrasive cleaner to brighten chrome wheels.
	GLOSS DETAILER	Seals and protects against harsh chemicals, salt and other sediments to prevent oxidation.
Polished aluminum or stainless steel	BARE METAL POLISH	Microabrasive polish to refurbish polished wheels. Do not use on chrome.

Washing the Motorcycle

Use only recommended cleaning and care products. Refer to Recommended Cleaning and Care Products and Recommended Surface Care Products.

NOTE:

During rinsing and washing, avoid direct spray on electrical components and any luggage or saddlebag sealing areas (if equipped). Avoid spraying water under leather saddlebag covers (if equipped).

Preparation

1. Allow motorcycle to cool before rinsing or washing. Spraying water on hot surfaces can leave water spots and mineral deposits.
2. Rinse the motorcycle from the bottom up.
3. To loosen dried bugs or hardened dirt, allow surfaces to soak under a damp towel.

Cleaning Wheels and Tires

1. Rinse wheel and tire surfaces. Avoid splashing brake dust on chrome or painted parts.
2. Apply WHEEL & TIRE CLEANER. Allow cleaner to set for one minute.
3. Clean the wheel with a BUG EATER SPONGE or WHEEL & SPOKE BRUSH. Thoroughly scrub all brake dust and other sediments off the wheel. Accumulated brake dust can trap moisture and dirt, which leads to wheel corrosion.
4. Rinse well.

Washing the Motorcycle

NOTE:

See the appropriate instructions in this section for cleaning leather, denim (flat) finishes, windshields or other special surfaces.

1. If necessary, use BUG REMOVER to remove bug splatters.
    a. Rinse the affected surfaces during preparation.
    b. Spray the area with BUG REMOVER.
    c. Wait one minute while the BUG REMOVER penetrates the bug splatters.
    d. Use the BUG EATER SPONGE while washing to easily remove bugs.
2. Prepare the wash.
    a. Fill a HARLEY WASH BUCKET with clean water.

b. Add SUNWASH BIKE SOAP, following the directions on the package.

c. Soak the WASH MITT and/or a BUG EATER SPONGE in the SUNWASH solution.

3. Wash all surfaces starting at the top working down toward the ground.

4. Rinse the motorcycle twice in both directions:

   a. Rinse from the bottom up.

   b. Rinse from the top down.

Drying the Motorcycle

1. Dry the surfaces from the top down using a SYNTHETIC DRYING CHAMOIS or a HOG BLASTER MOTORCYCLE DRYER. Avoid using any type of forced air on speakers or other sensitive components.

2. Dampen chamois in clean water and wring out the excess. The chamois is more absorbent when wet.

3. Wipe across the vehicle surface.

4. Repeat as necessary until surface is dry.

Polishing and Sealing

NOTE:

If motorcycle has denim finish, skip the Polishing and Sealing procedure.

1. Apply GLAZE POLY SEALANT with a DISPOSABLE DETAILING SOFT CLOTH or MICROFIBER DETAILING CLOTH, following the instructions on the package.

2. Buff with a DISPOSABLE DETAILING SOFT CLOTH.

3. Polish and seal the wheels to prevent corrosion.

Leather and Vinyl Care

CAUTION

Do not use bleach or detergents containing bleach on saddlebags, seats, tank panels or painted surfaces. Doing so can result in equipment damage. (00229a)

Do not use ordinary soap to clean leather or fur. It could dry or remove the oils from the leather.

Leather, vinyl and other synthetic surfaces must be periodically cleaned and treated to maintain its appearance and extend its life. Clean and treat these surfaces once a season or more frequently under adverse conditions.

These surfaces are not designed for long-term exposure to inclement weather. Protect these surfaces with a Harley-Davidson Seat Rain Cover or Motorcycle Storage Cover (sold separately).

1. Vacuum or blow dust off surface.
2. Thoroughly clean surfaces with SEAT, SADDLEBAG & TRIM CLEANER, following directions on the bottle.
3. Allow the material to dry naturally and completely at room temperature before applying other products to the material. Do not use artificial means to dry the material quickly.
4. For leather only, rejuvenate faded black surfaces with BLACK LEATHER REJUVENATOR, and apply LEATHER PROTECTANT to weatherproof and preserve the leather.

NOTE:

Many Harley-Davidson accessories and seats are made of either treated or untreated leather or have leather inserts. Natural materials age differently and require different care than man-made materials. Seat covers and panels made of leather gain "character", such as wrinkles, with age. Leather is porous and organic. Each leather product settles into its own distinct form with use. Your leather product matures into its own custom shape and style from the sun, rain and time. This maturing is natural and enhances the custom quality of your Harley-Davidson motorcycle.

Denim Finish

Some motorcycles have a denim (flat or matte) finish. The denim finish has qualities which differ from high gloss finishes on all other Harley-Davidson motorcycles. Like denim fabric, denim paint will burnish or mar with age and use, thus adding character and personality to the finish. For recommended products, refer to Recommended Cleaning and Care Products.

- If scratched, the color coat of paint does nick/scuff and these marks cannot be rubbed out.
- If polished, the finish will become less matte and more glossy over time.

Cleaning Denim Finish

For Light deposits: Use DENIM PAINT CLEANER and a SOFTCLOTH.

For heavier deposits: Use either SUNWASH BIKE SOAP and a clean H-D WASH MITT or QUICK WASH. Rinse thoroughly with clean water.

Scheduled Maintenance

Maintenance

⚠WARNING

Perform the service and maintenance operations as indicated in the regular service interval table. Lack of regular maintenance at the recommended intervals can affect the safe operation of your motorcycle, which could result in death or serious injury. (00010a)

⚠WARNING

If you operate your motorcycle under adverse conditions (severe cold, extreme heat, very dusty environment, very bad roads, through standing water, etc.), you should perform the regular maintenance intervals more frequently to ensure the safe operation of your motorcycle. Failure to maintain your motorcycle could result in death or serious injury. (00094a)

Service your motorcycle at the regular service intervals. Road conditions like dust, rain or riding styles can require servicing the motorcycle at more frequent intervals. Refer to Regular Service Intervals: 2016 Harley-Davidson Street Models.

Though some of these procedures can be performed with a minimum of tools, always consult your Harley-Davidson dealer for updates. Remember, your authorized Harley-Davidson dealer always services your motorcycle with the latest factory approved methods and equipment.

Record each service to maintain the new motorcycle warranty. Refer to Owner's Maintenance Records.

Preparing the Motorcycle for Maintenance

⚠WARNING

Be sure to check capacity rating and condition of hoists, slings, chains and cables before use. Exceeding capacity ratings or using lifting devices that are in poor condition can lead to an accident, which could result in death or serious injury. (00466c)

NOTE:

Always support a motorcycle that is being serviced with blocks or stands.

Setting Motorcycle Upright

---

1. Place motorcycle upright on a level surface or suitable lift, if available.
2. Verify that the motorcycle is level.
3. Secure with tie-downs.

Changing Engine Oil and Filter

⚠WARNING

Be sure that no lubricants or fluids get on tires, wheels or brakes when changing fluid. Traction can be adversely affected, which could result in loss of control of the motorcycle and death or serious injury. (00047d)

1. Run motorcycle until engine is at normal operating temperature.
2. Turn off engine.
3. See Engine Oil Drain Plug. Remove the engine oil drain plug. Discard O-ring.
4. Allow oil to drain completely. Dispose of waste properly.
5. Remove radiator shroud. See Cleaning Radiator.
6. See Engine Oil Filter. Remove the oil filter using OIL FILTER WRENCH HD-51453 .
7. Discard filter.
8. Clean the oil filter mount flange of any old gasket material.
9. Lubricate gasket of **new** oil filter with clean engine oil.

   NOTE:

   Do NOT use oil filter wrench for installation.

10. Install **new** oil filter (2) on filter mount (3). Hand-tighten oil filter one-half to three-quarters of a turn after gasket initially contacts the filter mounting surface.
11. Install engine oil drain plug and **new** O-ring. Tighten to 15-18 ft-lbs (20.0-25.0 Nm).

CAUTION

Do not overfill oil. Doing so can result in oil carryover to the air cleaner leading to equipment damage and/or equipment malfunction. (00190b)

12. Initially add 2.5 qt 2.4 L of engine oil. See Engine Lubrication.
13. Perform engine oil level **cold check**. See Checking Engine Oil Level.
14. Start engine and carefully check for oil leaks around drain plug and oil filter.
15. Install radiator shroud. See Cleaning Radiator.
16. Perform engine oil level **hot check**. See Checking Engine Oil Level.
17. Add more oil as required.

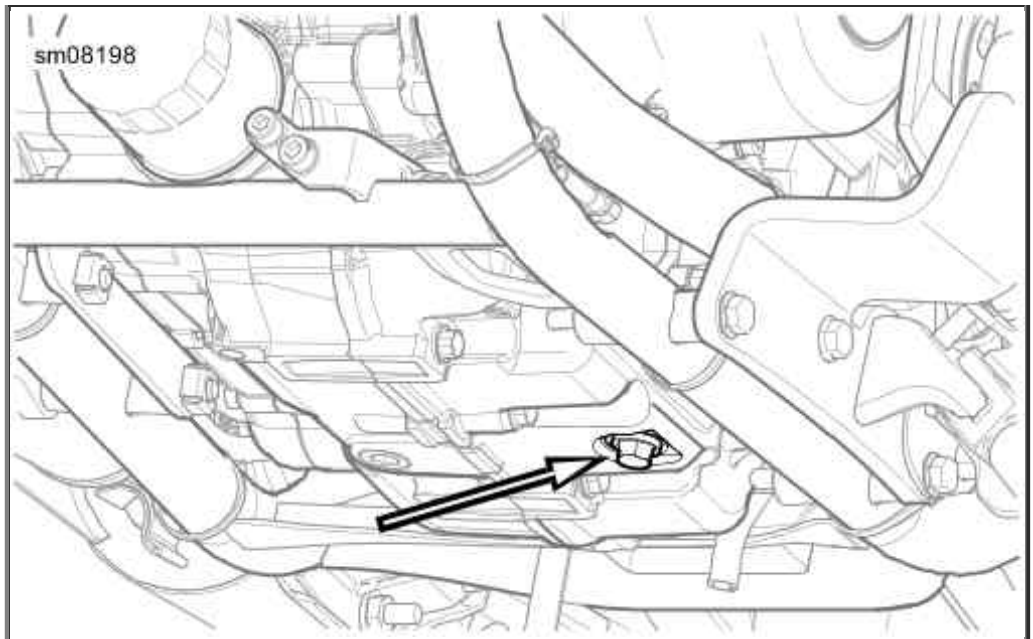

Engine Oil Drain Plug

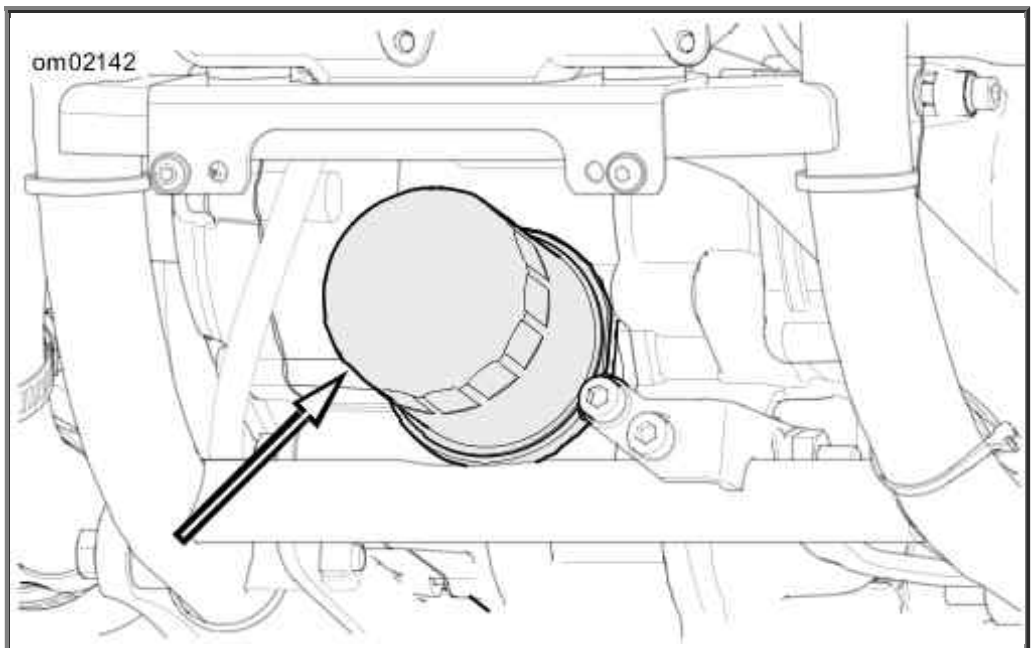

Engine Oil Filter

Checking Engine Oil Level

CAUTION

If the oil pressure indicator lamp remains lit, always check the oil supply first. If the oil supply is normal and the lamp is still lit, stop the engine at once and do not ride further until the trouble is located and the necessary repairs are made. Failure to do so may result in engine damage. (00157a)

Oil Level Cold Check

1. Set vehicle upright. See Preparing the Motorcycle for Maintenance.

2. See Engine Oil Level. Remove dipstick (1) and wipe clean.
3. Insert the dipstick and tighten.
4. Remove the dipstick. Verify that there is oil on the dipstick.
5. If oil is not visible, add only enough oil to bring the level to the bottom of the dipstick. See Engine Lubrication.

Oil Level Hot Check

CAUTION

Do not allow hot oil level to fall below Add/Fill mark on dipstick. Doing so can result in equipment damage and/or equipment malfunction. (00189a)

CAUTION

Do not overfill oil. Doing so can result in oil carryover to the air cleaner leading to equipment damage and/or equipment malfunction. (00190b)

1. Run motorcycle until engine is at normal operating temperature.
2. Set vehicle upright.
3. See Engine Oil Level. Remove dipstick (1) and wipe clean.
4. Insert the dipstick and tighten.
5. Remove the dipstick. Verify that the oil level is within the "X" mark on the dipstick.
6. If oil level is below the "X" mark, add only enough oil to bring the level to the "X" mark. See Engine Lubrication.

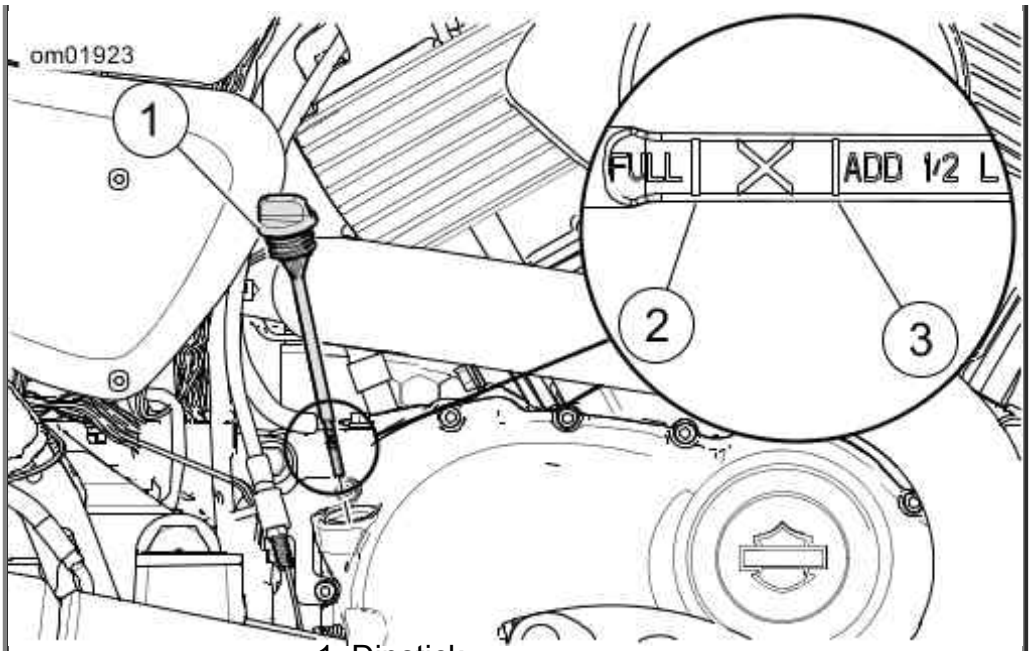

1. Dipstick
2. Full
3. Add

Engine Oil Level

Checking Pressure and Inspecting Tires

Refer to Tires and Tire Pressure for recommended tire pressure.

See Tires for inspection procedure.

Inspecting Brake Pads and Discs

Brake Pads

Harley-Davidson has provided your new motorcycle with the optimum brake pad friction material available. It is selected to give the best performance possible under dry, wet and high operating temperature conditions. It exceeds all regulatory requirements currently in effect. However, during some braking conditions you may experience noise. This is normal for this friction material.

⚠WARNING

Always replace brake pads in complete sets for correct and safe brake operation. Improper brake operation could result in death or serious injury. (00111a)

1. Check the brake disc as it spins. The disc should run true in the brake caliper.
2. See Brake Thickness. Measure the thickness of the brake pad friction material.

   NOTE:

   The pads do not necessarily wear evenly. The grooves on the brake pads are no longer visible when the pads are near the end of service life.

3. Refer to Brake Specifications. If the brake pad friction material is at the minimum thickness or less, replace the pads. Always replace brake pads in pairs. See a Harley-Davidson dealer.

Brake Specifications

MINIMUM THICKNESS	mm	in
Brake pads	0.5	0.020
Front brake disc	5.4	0.213
Rear brake disc	5.4	0.213

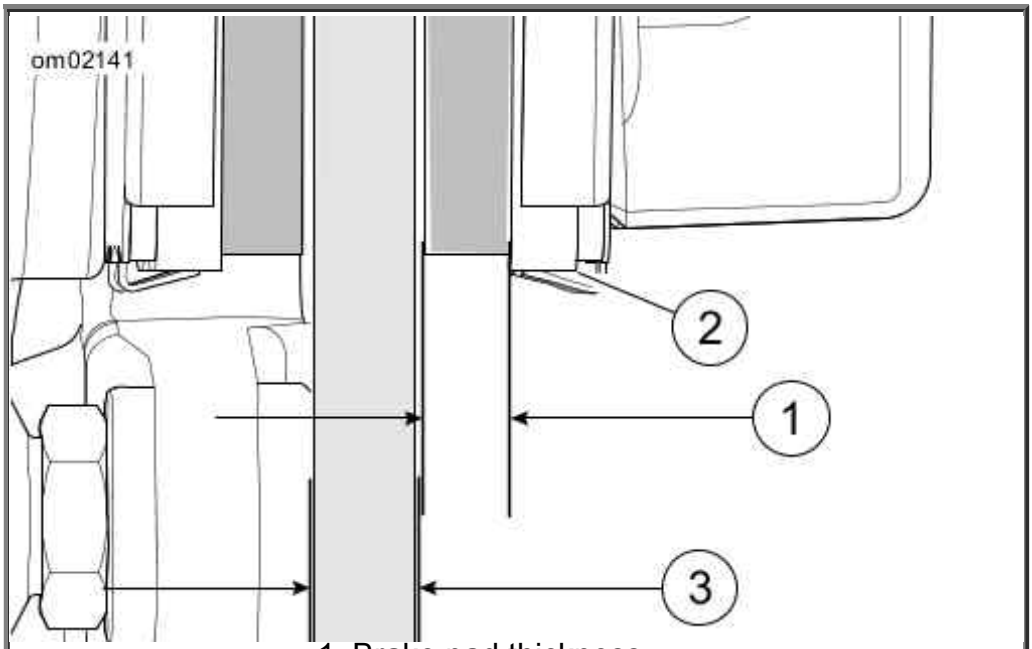

1. Brake pad thickness
2. Backplate
3. Brake disc thickness

Brake Thickness

Brake Disc

1. Refer to Brake Specifications. Check brake disc thickness and compare to value indicated in table.

2. Replace if necessary. See a Harley-Davidson dealer.

Checking Systems for Leaks or Abrasions

Check all lines and hoses for leaks, damage or abrasions. Refer to Regular Service Intervals: 2016 Harley-Davidson Street Models for the appropriate intervals.

- Fuel system and fuel lines
- Cooling system and coolant hoses
- Brake system and brake lines

Checking Brake Fluid Level and Changing Brake Fluid

NOTES:

- *Do not add or remove fluid from the brake system to compensate for normal wear. Reservoir volume is adequate to provide fluid to the wear limits of the pads and discs.*
- *Fluid level in reservoir will decrease with brake wear. If fluid level is low, check brake pads and discs for wear. See Inspecting Brake Pads and Discs.*

Checking Brake Fluid Level

1. Set motorcycle upright. Verify that the fluid in the reservoir is level. See Preparing the Motorcycle for Maintenance.

2. **Front:** See Front Master Cylinder Reservoir Sight Glass. Check level in front reservoir sight glass. Level must be above MIN.

3. **Rear:** See Rear Master Cylinder Reservoir MIN Level. Check level on side of rear brake reservoir. Level must be above MIN.

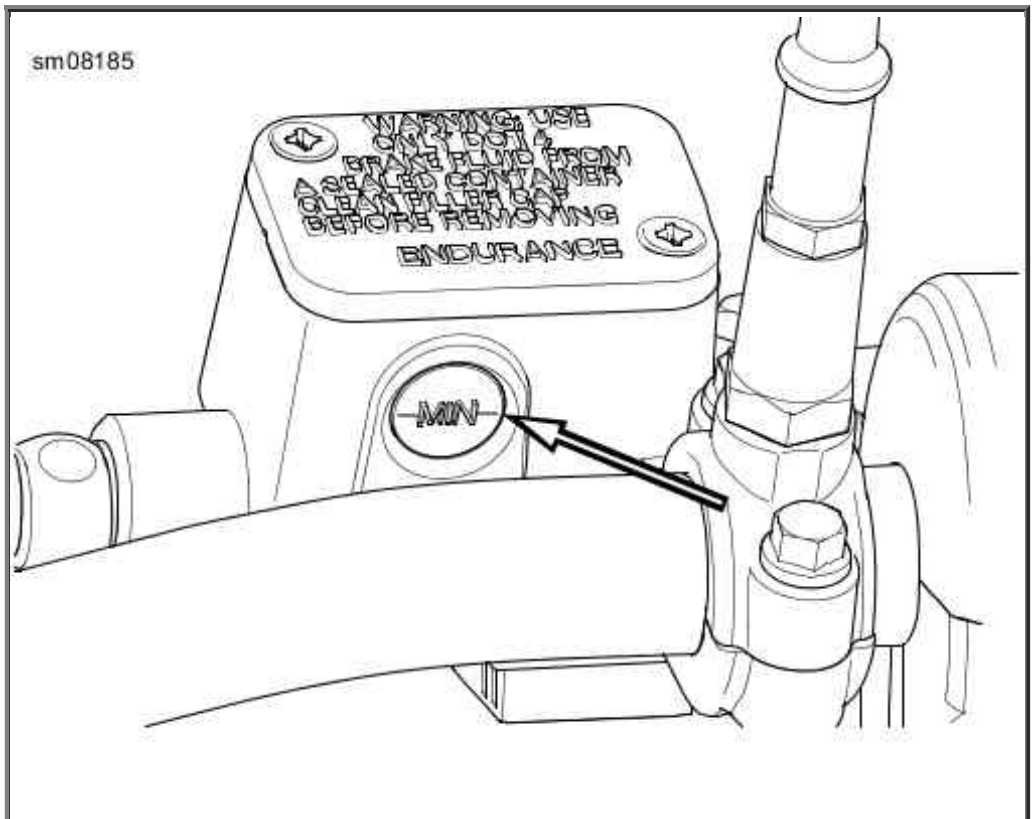

Front Master Cylinder Reservoir Sight Glass

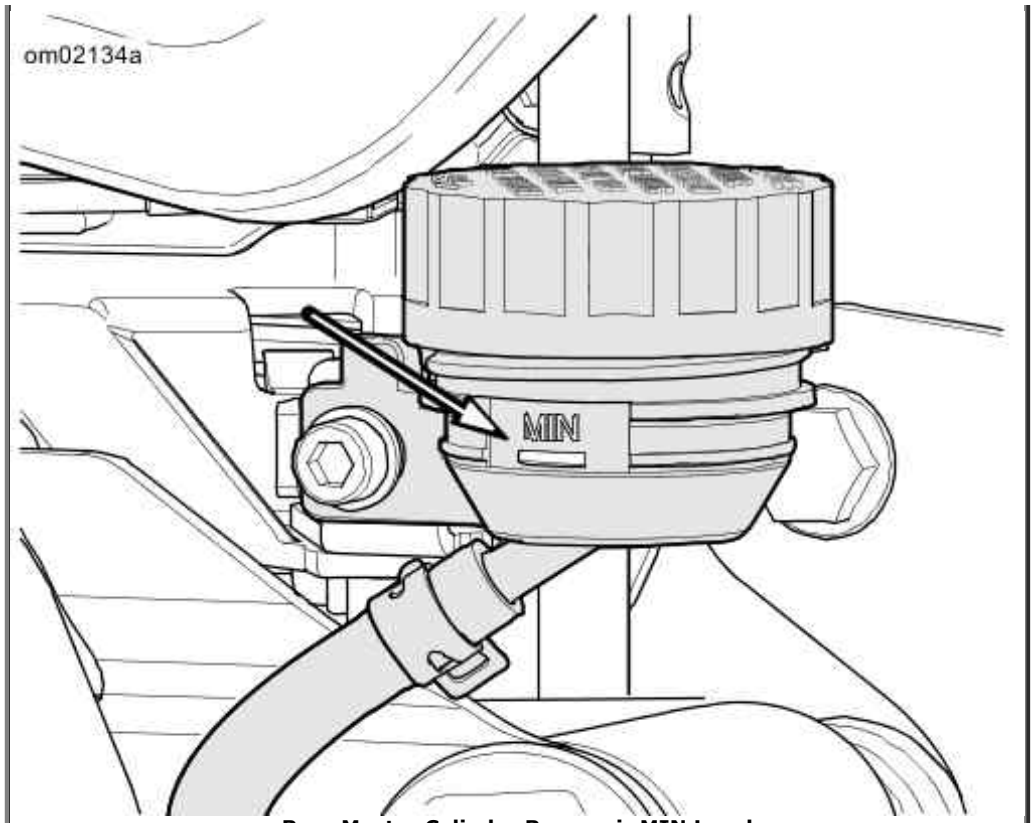

Rear Master Cylinder Reservoir MIN Level

Changing Brake Fluid

⚠CAUTION

Direct contact of D.O.T. 4 brake fluid with eyes can cause irritation. Avoid eye contact. In case of eye contact flush with large amounts of water and get medical attention. Swallowing large amounts of D.O.T. 4 brake fluid can cause digestive discomfort. If swallowed, obtain medical attention. Use in well ventilated area. KEEP OUT OF REACH OF CHILDREN. (00240a)

CAUTION

D.O.T. 4 brake fluid will damage painted and body panel surfaces it comes in contact with. Always use caution and protect surfaces from spills whenever brake work is performed. Failure to comply can result in cosmetic damage. (00239b)

Replace the brake fluid every two years. See a Harley-Davidson dealer.

Checking and Adjusting Throttle Cables

Check throttle cables for damage, wear or abrasions.

See a Harley-Davidson dealer for service.

Checking Clutch and Brake Controls

Clutch Hand Lever

The clutch hand lever should move smoothly through its full range.

See a Harley-Davidson dealer for service.

Brake Hand Lever

- The brake hand lever should move smoothly through its full range.
- Verify the brake hand lever has a firm feel when applied.

See a Harley-Davidson dealer for service.

Miscellaneous Lubrication

Refer to Regular Service Intervals: 2016 Harley-Davidson Street Models for all maintenance schedules.

For specific information for lubricating the following items, see the service manual or a Harley-Davidson dealer.

- Throttle cables

CAUTION

The clutch control cable must be oiled and adjusted periodically to compensate for lining wear. See MAINTENANCE SCHEDULING in this manual. Failure to oil and adjust the clutch control cable can result in equipment damage. (00203b)

- Clutch and brake cables
- Brake and clutch hand controls
- Steering head bearing
- Jiffy stand
- Front and rear brake caliper pins and bushings

Maintaining Front Fork

⚠WARNING

Regularly inspect shock absorbers and front forks. Replace leaking, damaged or worn parts that can adversely affect stability and handling, which could result in death or serious injury. (00012a)

Have a Harley-Davidson dealer drain the front fork oil and refill at proper intervals.

Rebound action of the fork will be impaired if the fork oil level is low.

If fork does not appear to be working properly or a significant oil leak should develop, see a Harley-Davidson dealer.

Adjusting Steering Head Bearings

⚠WARNING

Adjustments to steering head bearings should be performed by a Harley-Davidson dealer. Improperly adjusted bearings can adversely affect handling and stability, which could result in death or serious injury. (00051b)

See a Harley-Davidson dealer to adjust the steering head bearings.

Cleaning Radiator

⚠CAUTION

At operating temperature, radiators and oil coolers contain hot fluids. Contact with a radiator or oil cooler can result in minor or moderate burns. (00141b)

1. See Radiator Shroud. Remove screws (5) and washers (4).
2. Remove radiator shroud (3) from mounting tab (1).

CAUTION

Using a pressure washer to clean radiators or oil coolers can damage cooling fins and reduce airflow. Reduced airflow can lead to overheating, resulting in engine damage and could void your engine warranty. (00056b)

CAUTION

Clean the inlet surface of the radiator regularly. Leaves and other debris can collect on the radiator surface and degrade radiator performance which could lead to engine overheating and engine damage. (00197c)

3. Clean debris from radiator fins (2).
4. Align top of radiator shroud to mounting tab.
5. Install washers and screws. Tighten to 80-97 in-lbs (9.0-11.0 Nm).

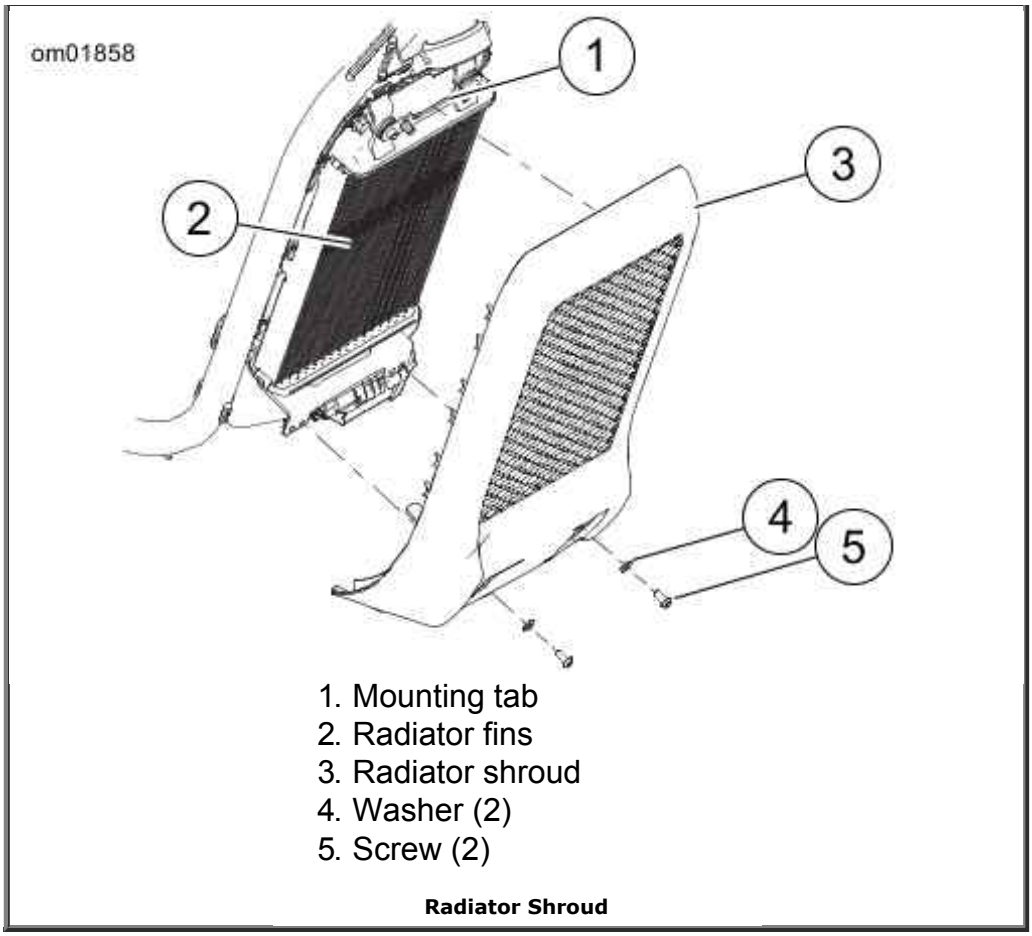

Radiator Shroud

Coolant

General

CAUTION

Use only Genuine Harley-Davidson Extended Life Antifreeze and Coolant. Use of other coolants/mixtures may lead to engine damage. (00179b)

GENUINE HARLEY-DAVIDSON EXTENDED LIFE ANTIFREEZE AND COOLANT is pre-diluted and ready to use full strength. It provides temperature protection to -34° F -36.7° C . DO NOT add water.

CAUTION

De-ionized water must be used with the antifreeze in the cooling system. Hard water can cause scale accumulation in water passages which reduces cooling system efficiency, leading to overheating and engine damage. (00195a)

If GENUINE HARLEY-DAVIDSON EXTENDED LIFE ANTIFREEZE AND COOLANT is unavailable, a mixture of de-ionized water and ethylene glycol-based antifreeze may be used. At the first opportunity, change back to GENUINE HARLEY-DAVIDSON EXTENDED LIFE

ANTIFREEZE AND COOLANT.

Checking Coolant Level

1. Position motorcycle upright. See Preparing the Motorcycle for Maintenance.
2. Allow engine to cool.
3. Remove left side cover. See Side Covers.
4. See Coolant Overflow Tank. Check that coolant level is at or slightly above the "COLD FILL" line (2).

   NOTE:

   If the coolant bottle is empty when the engine is cold, inspect the system for leaks. Repair as needed. Fill system with coolant and purge any trapped air.

5. If level is below "COLD FILL" line on tank, remove overflow tank cap (1).
6. Add GENUINE HARLEY-DAVIDSON EXTENDED LIFE ANTIFREEZE AND COOLANT until fluid level reaches, or is slightly above the "COLD FILL" line.
7. Install overflow tank cap.

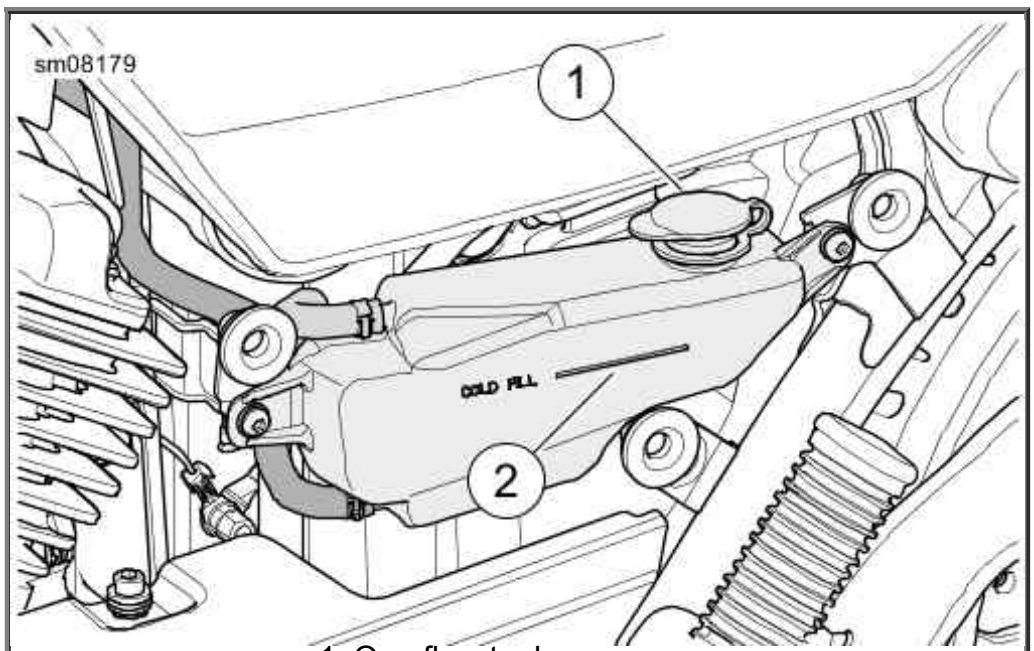

1. Overflow tank cap
2. Cold fill level

Coolant Overflow Tank

Replacing Coolant

See a Harley-Davidson dealer for coolant replacement.

Inspecting Rear Fork Bearing

See a Harley-Davidson dealer for rear fork bearing inspection.

Checking Drive Belt and Sprockets

NOTE:

Always use BELT TENSION GAUGE HD-35381-A to measure belt deflection. Failure to use tension gauge may cause under-tensioned belts. Loose belts can fail due to "ratcheting" (jumping a tooth) which causes tensile cord crimping and breakage.

1. Set motorcycle upright. See Preparing the Motorcycle for Maintenance.
2. Put transmission in neutral.
3. Allow vehicle to cool.
4. Remove all load (rider, passenger and cargo).

⚠WARNING

To prevent accidental vehicle start-up, which could cause death or serious injury, remove main fuse before proceeding. (00251b)

5. Remove main fuse. See Fuses and Relays.
6. See Belt Tension Gauge. Slide O-ring (4) to 0 lb 0 kg mark (3).
7. Fit belt cradle (2) against bottom of drive belt and align with belt deflection window.
8. Press up on knob (6) until O-ring slides down to 10 lb 4.5 kg mark (5) and hold steady.

   NOTE:

   Each deflection graduation is 0.0625 in 1.59 mm .

9. See Belt Deflection Window. Measure belt deflection through window.
10. Compare measurement to specifications. Refer to Belt Deflection Specifications*.
11. Adjust belt if necessary. See a Harley-Davidson dealer.
12. Inspect rear sprocket. Replace rear sprocket if major tooth damage or loss of chrome exists. See a Harley-Davidson dealer.
13. Install main fuse.

Belt Deflection Specifications*

MODELS	mm	in
XG500	12.7-15.9	0.50-0.62
XG750	12.7-15.9	0.50-0.62
* Deflection measured at 10 lb 4.5 kg tension.		

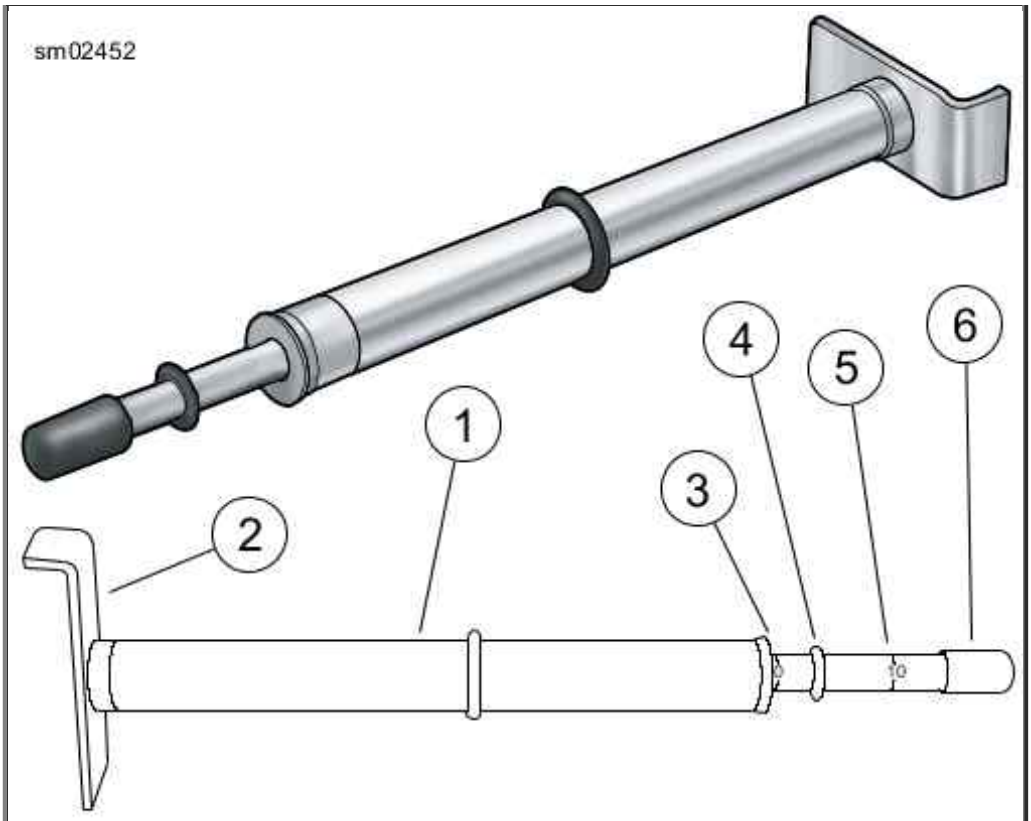

1. Belt tension gauge
2. Belt cradle
3. 0 kg (0 lbs) mark
4. O-ring
5. 4.5 kg (10 lbs) mark
6. Knob

Belt Tension Gauge

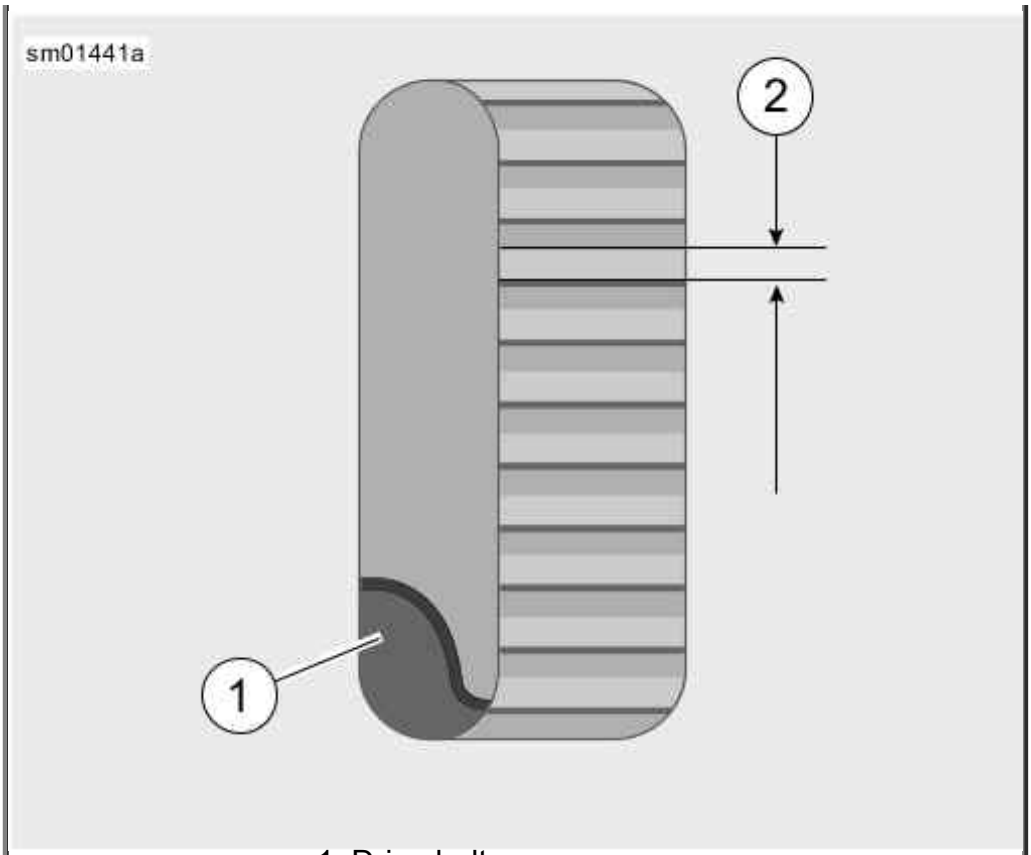

1. Drive belt
2. Deflection graduation

Belt Deflection Window

Inspecting Rear Shock Bushing

See a Harley-Davidson dealer for rear shock bushing inspection.

Checking for Exhaust Leaks

1. Check exhaust system for obvious signs of leakage such as carbon marks or marks at pipe joints.
    a. Check for loose or missing fasteners.
    b. Check for fractured pipe clamps or brackets.
    c. Check for loose or fractured exhaust shields.
2. Correct any detected leaks. See a Harley-Davidson dealer.

Inspecting Air Filter

1. See Air Cleaner. Remove screw (1).
2. Remove cover (2).
3. Remove nuts (3).
4. Remove bracket (4).

5. Remove filter element (5).
6. Hold the filter element up to a strong light source. The element is sufficiently clean when light is uniformly visible through the media.
7. If necessary, discard filter element. Install a **new** element.
8. Install filter element (5).
9. Install bracket (4).
10. Install nuts (3). Tighten to 54-70 in-lbs (6.0-8.0 Nm).
11. Install cover (2).
12. Install screw (1). Tighten to 54-70 in-lbs (6.0-8.0 Nm).

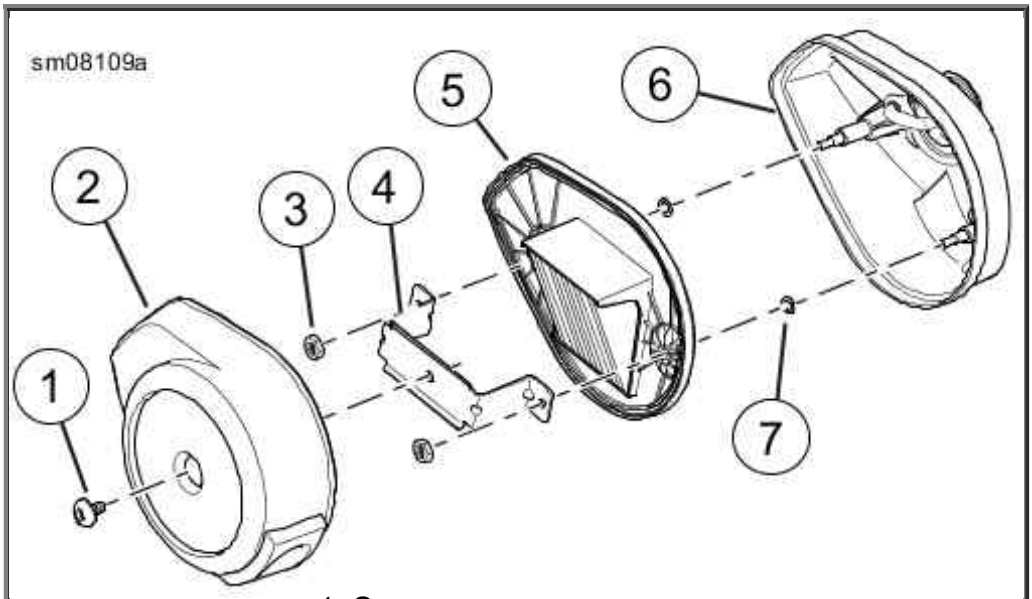

1. Screw
2. Cover
3. Nut (2)
4. Bracket
5. Filter element
6. Backplate
7. Washer (2)

Air Cleaner

Lubricating Fuel Cap Lock

Lubricate fuel cap lock with HARLEY LUBE.

Inspecting Valve Lash

See a Harley-Davidson dealer for valve lash inspection and adjustment.

Cleaning Battery

See Battery Maintenance for cleaning instructions.

Replacing Spark Plugs

Refer to Regular Service Intervals: 2016 Harley-Davidson Street Models. Replace the spark plugs at specified mileage intervals.

⚠WARNING

Disconnecting spark plug cable with engine running can result in electric shock and death or serious injury. (00464b)

⚠CAUTION

Do NOT pull on any electrical wires. Pulling on electrical wires may damage the internal conductor causing high resistance, which may result in minor or moderate injury. (00168a)

Refer to Electrical Specifications for spark plug specifications.

1. Disconnect spark plug cables from plugs by pulling up on the molded connector caps.
2. Check spark plug type. Only use those spark plugs specified for your model motorcycle.
3. Check spark plug gap against specifications table.
4. Always tighten to the proper torque.
5. Connect each molded connector cap until the cap snaps firmly into place over the spark plug.

Checking Electrical Equipment and Switches

⚠WARNING

Be sure headlamp, tail and stop lamp and turn signals are operating properly before riding. Poor visibility of rider to other motorists can result in death or serious injury. (00478b)

Check all electrical equipment and switches including the tail lamps, turn signals, headlamp and horn for proper operation.

Service Procedures

Tires

General Information

⚠WARNING

Match tires, tubes, rim strips or seals, air valves and caps to the correct wheel. Contact a Harley-Davidson dealer. Mismatching can lead to tire damage, allow tire slippage on the wheel or cause tire failure, which could result in death or serious injury. (00023c)

⚠WARNING

Harley-Davidson front and rear tires are not the same. Interchanging front and rear tires can cause tire failure, which could result in death or serious injury. (00026a)

Refer to Tires and Tire Pressure for tire information and pressures.

- Maintain correct tire pressure.
- Follow tire data for correct cold tire inflation pressure.
- Check before riding when tires are cold.

Harley-Davidson does not perform any testing with only nitrogen in tires. Harley-Davidson neither recommends nor discourages the use of pure nitrogen to inflate tires.

India Tire Compliance Statement: Harley-Davidson Motor Company declares that the tires listed in the specifications section (India only) meet the Indian Standard 15627 requirement of the Bureau of Indian Standards (as amended from time to time) required for registration of vehicles assembled/manufactured in India. These tires also comply with the Central Motor Vehicle Rules requirements, 1989.

Inspecting Tires

Harley-Davidson tires are equipped with wear bars that run horizontally across the tread.

A tire is considered worn when the wear bars are visible or if only 0.031 in 0.8 mm tread depth remains. A worn tire can:

- Be more easily damaged leading to tire failure.
- Provide reduced traction.
- Adversely affect stability and handling.

See Tread Wear Indicator: Michelin Tires or Tread Wear Indicator: MRF Tires. Always replace tires before the tread wear bars appear.

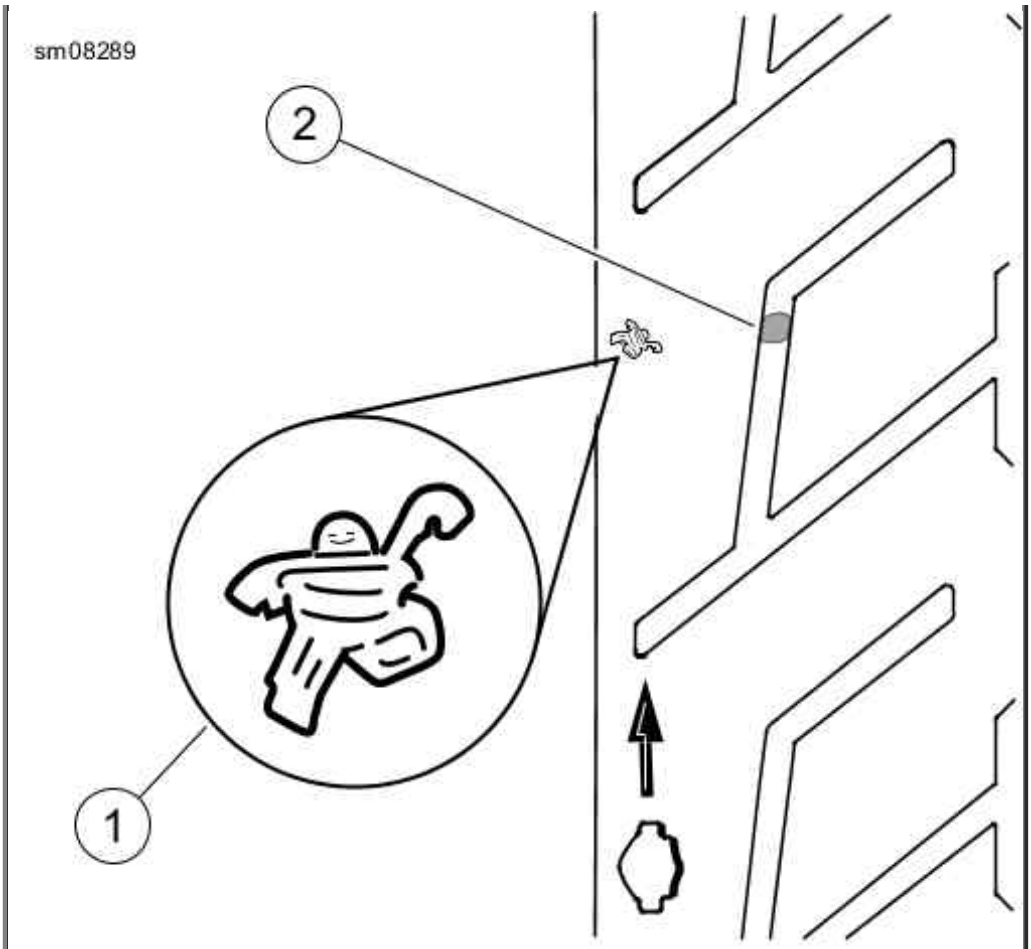

1. Indicator
2. Tread wear bar

Tread Wear Indicator: Michelin Tires

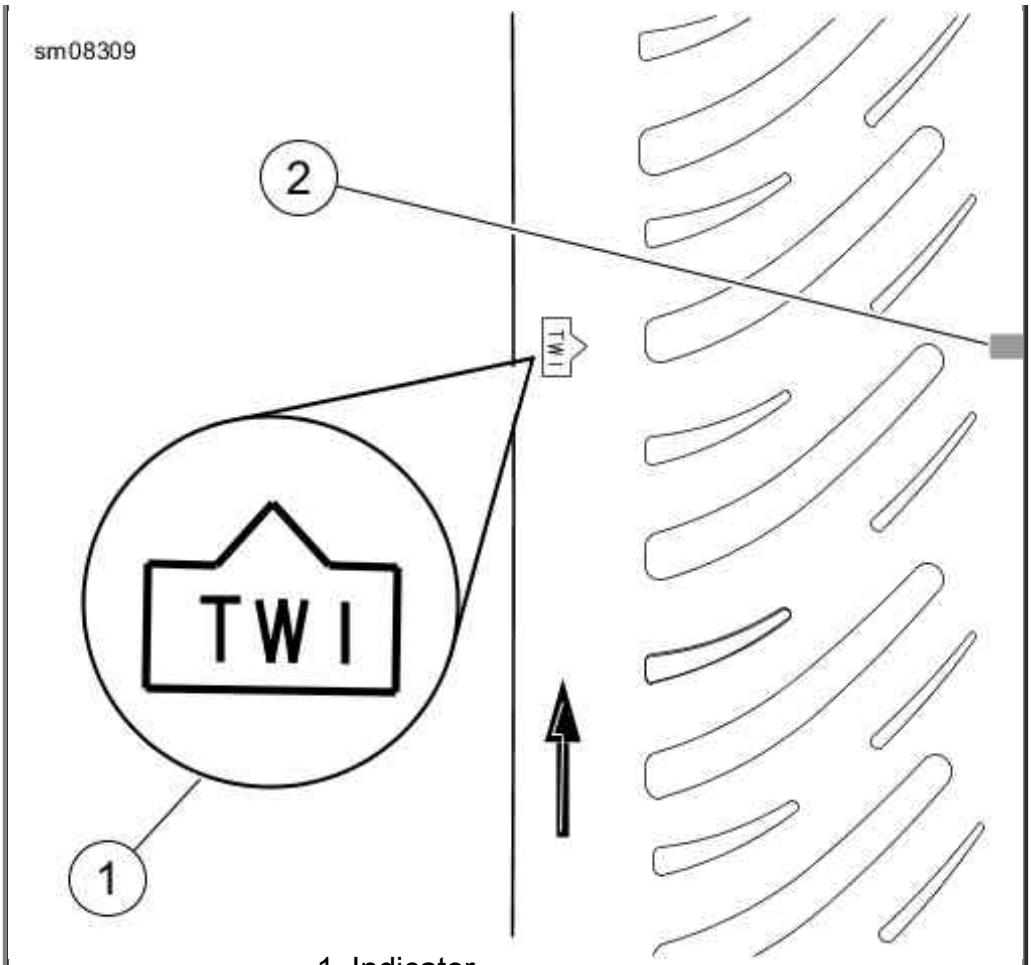

1. Indicator
2. Tread wear bar

Tread Wear Indicator: MRF Tires

Replacing Tires

⚠WARNING

Tires are a critical safety component. Contact a Harley-Davidson dealer for tire repair or replacement. Improper tire service can adversely affect stability and handling, which could result in death or serious injury. (00057a)

⚠WARNING

Replace punctured or damaged tires. In some cases, small punctures in the tread area may be repaired from within the removed tire by a Harley-Davidson dealer. Speed should NOT exceed 50 mph (80 km/h) for the first 24 hours after repair, and the repaired tire should NEVER be used over 80 mph (130 km/h). Failure to follow this warning could lead to tire failure and result in death or serious injury. (00015b)

⚠WARNING

Replace tire immediately with a Harley-Davidson specified

Replace tire immediately with a Harley-Davidson specified tire when wear bars become visible or only 1/32 in (0.8 mm) tread depth remains. Riding with a worn tire could result in death or serious injury. (00090c)

New tires are needed if any of the following conditions exist (refer to Tires and Tire Pressure for the specified replacement tires):

- Tread wear bars become visible on the tread surfaces.
- Tire cords or fabric become visible through cracked sidewalls, snags or deep cuts.
- Bumps, bulges or slits in the tire.
- Punctures, cuts, or other damage to the tire that cannot be repaired.

When installing tires on rims, do not rely on tread design to determine direction of rotation. Always be sure the rotational arrows molded into the sidewalls point in the direction of rotation when the vehicle is moving forward.

Engine Lubrication

⚠CAUTION

Prolonged or repeated contact with used motor oil may be harmful to skin and could cause skin cancer. Promptly wash affected areas with soap and water. (00358b)

⚠CAUTION

If engine oil is swallowed, do not induce vomiting. Contact a physician immediately. In case of contact with eyes, immediately flush with water. Contact a physician if irritation persists. (00357d)

CAUTION

Do not switch lubricant brands indiscriminately because some lubricants interact chemically when mixed. Use of inferior lubricants can damage the engine. (00184a)

Always use the proper grade of oil for the lowest temperature expected before the next scheduled oil change. Refer to Recommended Engine Oils.

This motorcycle was originally equipped with GENUINE HARLEY-DAVIDSON H-D 360 MOTORCYCLE OIL 20W50. H-D 360 is the preferred oil under normal operating conditions. If operation under extreme cold or heat are expected, refer to Recommended Engine Oils for alternative choices.

If necessary and H-D 360 is not available, add oil certified for diesel engines. Acceptable designations include: CH-4, CI-4 and CJ-4. The preferred viscosities, in descending order are: 20W50, 15W40 and 10W40.

At the first opportunity, see an authorized dealer to change back to 100 percent Harley-Davidson oil.

Recommended Engine Oils

TYPE	VISCOSITY	RATING	LOWEST AMBIENT TEMPERATURE	COLD WEATHER STARTS BELOW 50 °F (10 °C)
Screamin' Eagle SYN3 Full Synthetic Motorcycle Lubricant	SAE 20W50	HD 360	Above 30 °F -1 °C	Excellent
Genuine Harley-Davidson H-D 360 Motorcycle Oil	SAE 20W50	HD 360	Above 40 °F 4 °C	Good
Genuine Harley-Davidson H-D 360 Motorcycle Oil	SAE 10W40	HD 360	Below 40 °F 4 °C	Excellent

Winter Lubrication

Change engine oil often in colder climates. If motorcycle is frequently used for trips less than 15 mi 24 km , in ambient temperatures below 60 °F 16 °C , reduce oil change intervals to 1500 mi 2400 km .

NOTE:

Lower ambient temperatures require more frequent oil changes.

Water vapor is a normal by-product of combustion. During cold-weather operation, some water vapor condenses to liquid form on the cool surfaces inside the engine. In freezing weather this water becomes slush or ice. If the engine is not warmed to operating temperature, accumulated slush or ice blocks the oil lines and causes engine damage. Over time, water will accumulate, mix with the engine oil and form a sludge that is harmful to the engine.

If the engine is allowed to warm to normal operating temperature, most of the water evaporates and exits through the crankcase breather.

Battery Replacement

Removing the Battery

1. Remove left and right side covers. See Side Covers.
2. Remove seat. See Seat.
3. Remove main fuse. See Fuses and Relays.
4. **For California models only:** See Purge Solenoid. Remove purge solenoid.
    a. Disconnect purge solenoid connector (2).
    b. Remove solenoid-to-induction module and canister-to-solenoid lines (3 and 4) from purge solenoid (1).
5. See Vapor Valve. Remove vapor valve.

a. Remove vent lines (3) from vapor valve (1).

b. Pull vapor valve from clip (2).

6. See Front Belt Guard. Remove front belt guard.

a. Remove screws and washers (2).

b. Remove front belt guard (1).

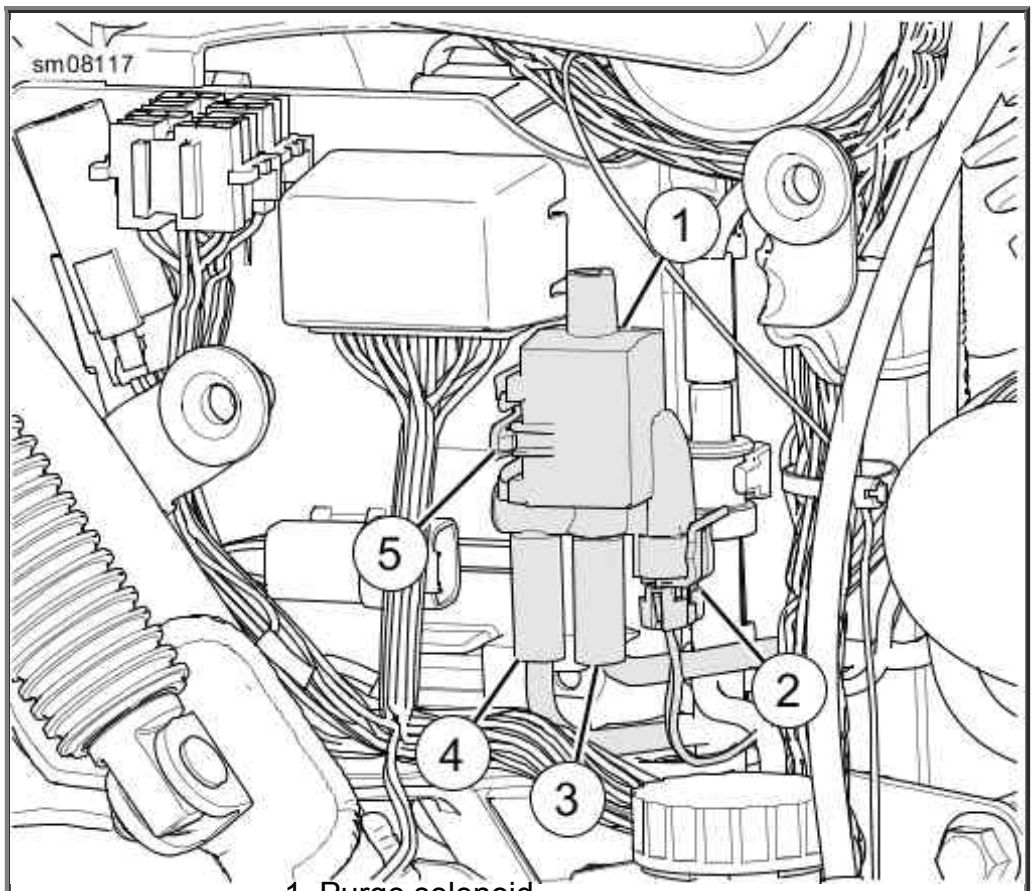

1. Purge solenoid
2. Purge solenoid connector
3. Solenoid-to-induction module line
4. Canister-to-solenoid line
5. Tab

Purge Solenoid

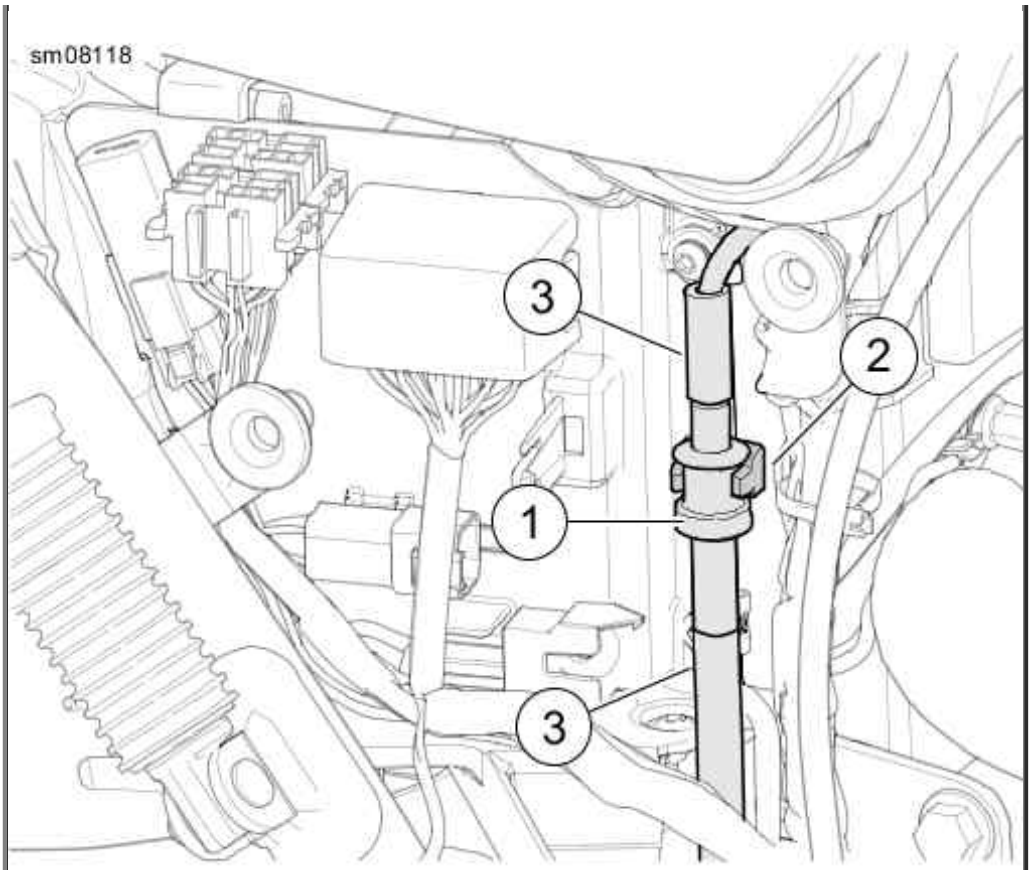

1. Vapor valve
2. Clip
3. Vent line (2)

Vapor Valve

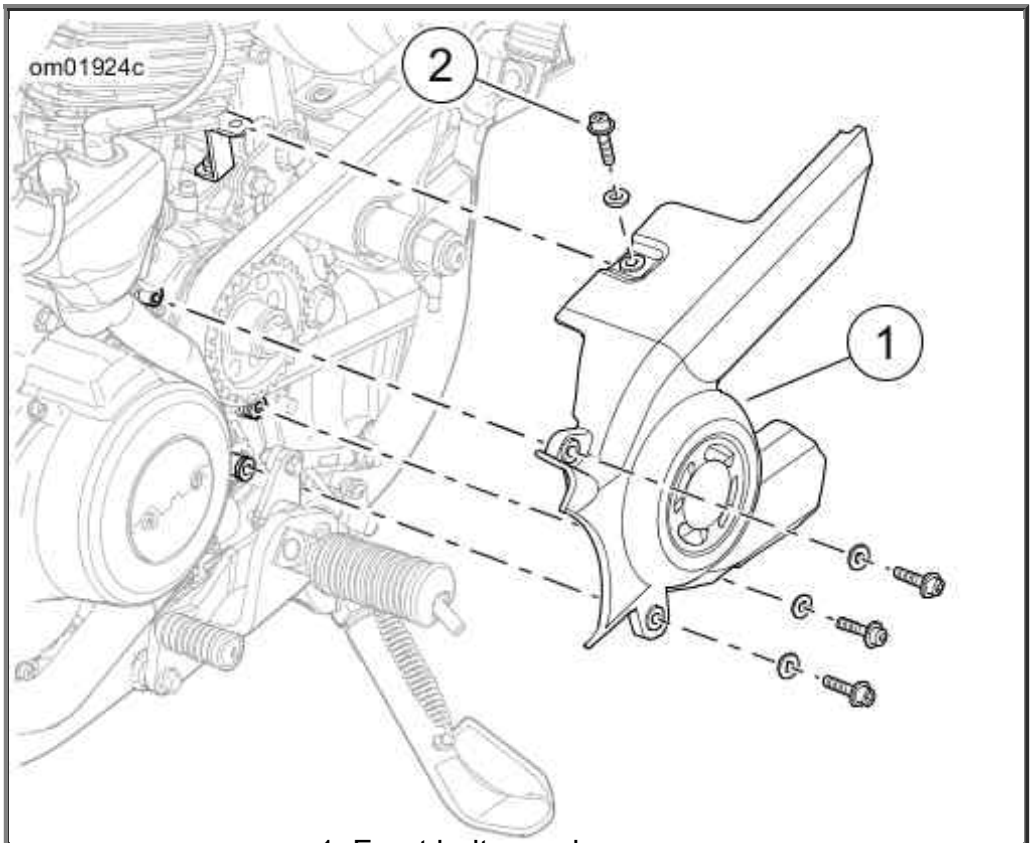

1. Front belt guard
2. Screw and washer (4)

Front Belt Guard

7. See Battery. Remove electrical panel.

   a. Remove screws (3).

   b. Carefully pull electrical panel (1) away from battery.

⚠WARNING

Disconnect negative (-) battery cable first. If positive (+) cable should contact ground with negative (-) cable connected, the resulting sparks can cause a battery explosion, which could result in death or serious injury. (00049a)

8. See Battery Ground Cable. Disconnect negative battery cable (1) from ground stud (2).

9. See Battery. Disconnect positive battery cable (5) from battery.

10. Remove battery.

11. Disconnect negative battery cable.

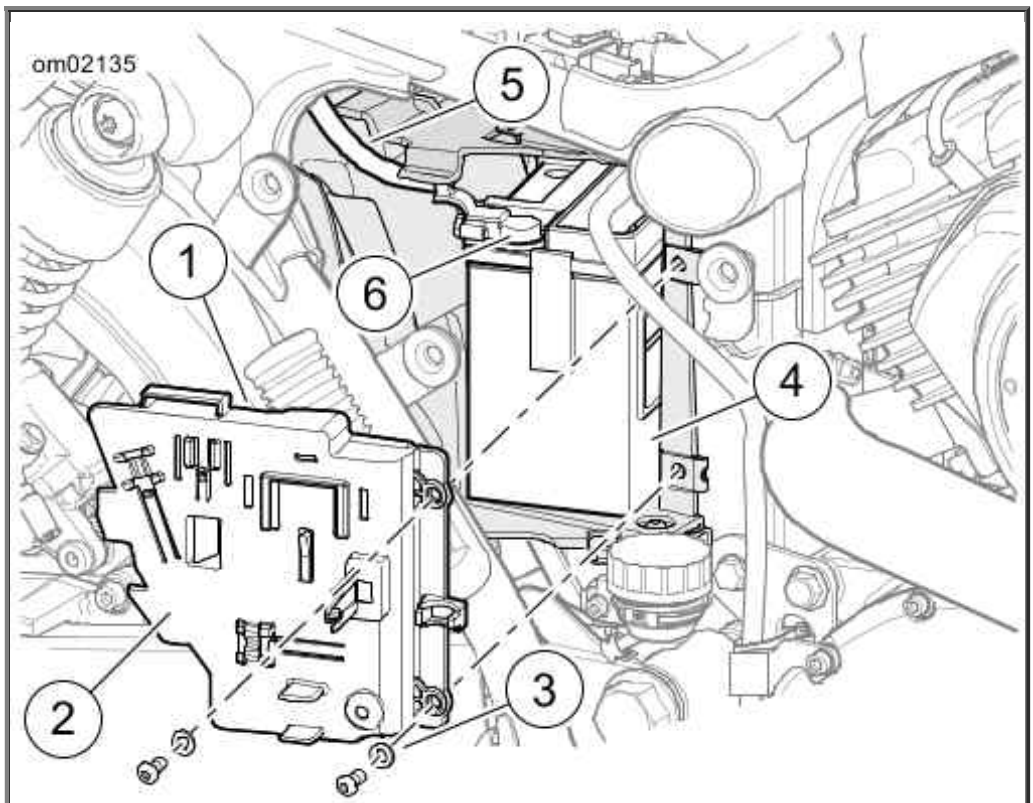

1. Electrical panel
2. Tab (2)
3. Screw and washer (2)
4. Battery
5. Positive battery cable
6. Positive battery terminal

Battery

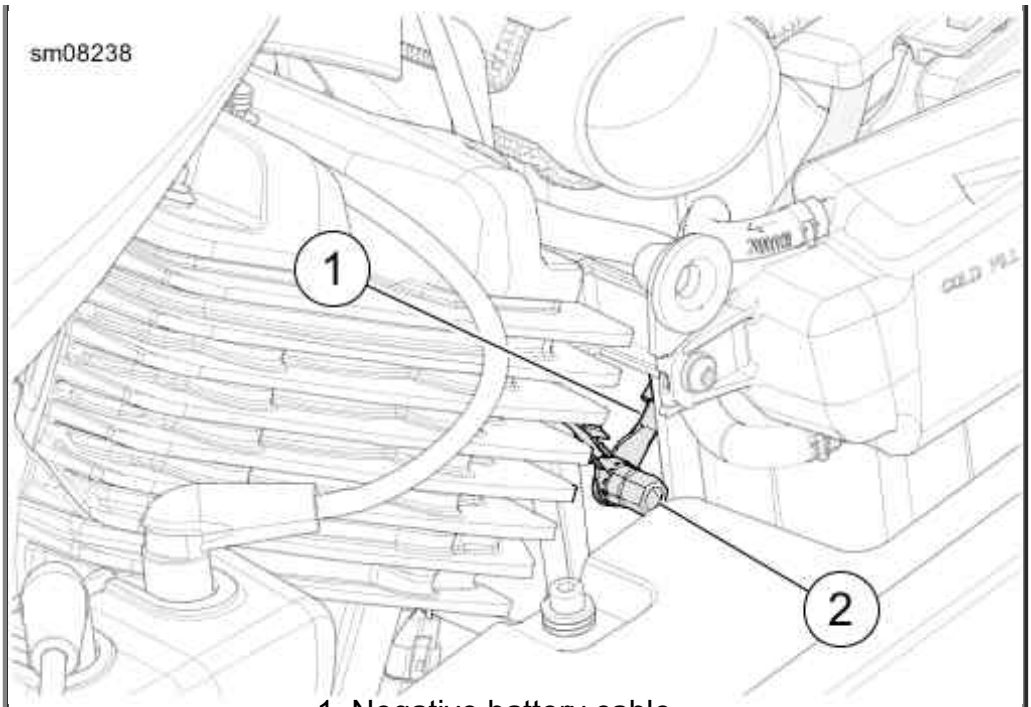

1. Negative battery cable
2. Ground stud

Battery Ground Cable

Installing Battery

⚠WARNING

Connect positive (+) battery cable first. If positive (+) cable should contact ground with negative (-) cable connected, the resulting sparks can cause a battery explosion, which could result in death or serious injury. (00068a)

CAUTION

Connect the cables to the correct battery terminals. Failure to do so could result in damage to the motorcycle electrical system. (00215a)

1. Install negative battery cable to negative battery terminal. Tighten to 60-70 in-lbs (6.8-7.9 Nm).
2. Route negative cable through battery box.
3. See Battery. Install battery (4) in battery box.
4. Connect the positive battery cable (5) to the positive battery terminal (6). Tighten to 60-70 in-lbs (6.8-7.9 Nm).
5. See Battery Ground Cable. Connect negative battery cable (1) to ground stud (2). Tighten to 54-66 in-lbs (6.0-7.5 Nm).
6. See Battery. Install electrical panel.

7. Verify electrical panel tabs (2) are inserted into slots.
8. Install screws (3). Tighten to 21-29 in-lbs (2.3-3.3 Nm).
9. See Front Belt Guard. Position front belt guard (1). Install screws and washers (2). Tighten to 80-97 in-lbs (9.0-11.0 Nm).

⚠WARNING

Excessive pressure can build in the fuel tank if vapor valve is not mounted vertically with long fitting to top. Leaks due to excessive pressure can cause a fire or explosion, which could result in death or serious injury. (00265a)

10. See Vapor Valve. Press vapor valve (1) into clip (2).
11. Install vent lines (3).
12. **For California Models Only:** See Purge Solenoid. Install purge solenoid.
    a. Install purge solenoid (1).
    b. Install solenoid-to-induction module and canister-to-solenoid lines (3 and 4).
    c. Connect purge solenoid connector (2).
13. Install main fuse. See Fuses and Relays.

⚠WARNING

After installing seat, pull upward on seat to be sure it is locked in position. While riding, a loose seat can shift causing loss of control, which could result in death or serious injury. (00070b)

14. Install seat. See Seat.
15. Install side covers. See Side Covers.

Battery Maintenance

Battery Safety

⚠WARNING

Batteries contain sulfuric acid, which could cause severe burns to eyes and skin. Wear a protective face shield, rubberized gloves and protective clothing when working with batteries. KEEP BATTERIES AWAY FROM CHILDREN. (00063a)

⚠WARNING

Explosive hydrogen gas, which escapes during charging, could cause death or serious injury. Charge battery in a well-ventilated area. Keep open flames, electrical sparks and smoking materials away from battery at all times. KEEP BATTERIES AWAY FROM CHILDREN. (00065a)

⚠WARNING

Batteries, battery posts, terminals and related accessories contain lead and lead compounds, and other chemicals known to the State of California to cause cancer, and birth defects or other reproductive harm. Wash hands after handling. (00019e)

⚠WARNING

Never remove warning label attached to top of battery. Failure to read and understand all precautions contained in warning, could result in death or serious injury. (00064a)

The motorcycle uses a permanently sealed, maintenance-free, lead/calcium and sulfuric acid battery. All batteries are shipped precharged and ready for service. Do not attempt to open the battery for any reason.

Cleaning and Inspecting

Battery top must be clean and dry. Dirt and electrolyte on top of the battery can cause battery to self-discharge.

1. Clean top of battery.
2. Clean cable connectors and battery terminals using a wire brush or fine grit sandpaper to remove any oxidation.
3. Inspect and clean the battery screws, clamps and cables. Check for breakage, loose connections and corrosion.
4. Check the battery posts for melting or damage caused by over-tightening.
5. Inspect the battery for discoloration, a raised top or a warped or distorted case. Any of these conditions indicate that the battery has been frozen, overheated or overcharged.
6. Inspect the battery case for cracks or leaks.

Storing the Battery

If the motorcycle will not be operated for several weeks, remove the battery from the motorcycle and fully charge.

If the motorcycle is stored with the battery installed, connect an automatic, constant monitoring charger/tender to maintain charge. See an authorized dealer.

A battery that is removed from the motorcycle can self-discharge. A battery that is left in the motorcycle can either self-discharge or discharge from parasitic loads. Parasitic loads occur from things like diode leakage and maintaining computer memory.

- Batteries self-discharge at a faster rate at higher ambient temperatures.
- To reduce the self-discharge rate, store battery in a cool, dry place.
- Charge the battery every two weeks if stored in the vehicle.
- Charge the battery once per month if stored out of the vehicle. See Charging Battery.

Charging Battery

⚠WARNING

Unplug or turn OFF battery charger before connecting charger cables to battery. Connecting cables with charger ON can cause a spark and battery explosion, which could result in death or serious injury. (00066a)

An automatic, constant monitoring battery charger/tender with a charging rate of 5 amps or less at less than 14.6 volts is recommended.The use of constant current chargers (including trickle chargers) to charge sealed AGM batteries is not recommended. Any overcharge will cause dry-out and premature battery failure. Never charge a battery without first reviewing the instructions for the charger being used. In addition to the manufacturer's instructions, follow the general safety precautions.

Charge the battery when:

- Motorcycle lights appear dim.
- Electric starter sounds weak.
- Battery has not been used for an extended period.

1. Perform a voltage test to determine the state of charge. If battery needs to be charged, proceed to the next step.

2. Place the battery on a level surface.

CAUTION

Do not reverse the charger connections described in the following steps or the charging system of the motorcycle could be damaged. (00214a)

3. Connect the red battery charger lead to the positive terminal of the battery.

4. Connect the black battery charger lead to the negative terminal of the battery.

   NOTE:

   If the battery is still in the motorcycle, connect the negative lead to the chassis ground. Make sure that the ignition and all electrical accessories are turned off.

5. Step away from the battery and turn on the charger.

⚠WARNING

Unplug or turn OFF battery charger before disconnecting charger cables from battery. Disconnecting clamps with charger ON can cause a spark and battery explosion, which could result in death or serious injury. (00067a)

6. After the battery is fully charged, turn OFF the charger and disconnect the black battery charger lead from the negative terminal of the battery.
7. Disconnect the red battery charger lead from the positive terminal of the battery.
8. Mark the charging date on the battery.

Absorbed Glass Mat (AGM) Battery Charging Information

The motorcycle has a sealed Absorbed Glass Mat (AGM) battery design that is superior to conventional flooded lead acid batteries. This battery design will provide many years of dependable service when the proper battery charging equipment and storage procedures are used. Because of the sealed, nonspillable battery design, an automatic, constant monitoring battery charger that uses a charging rate of less than 14.6 volts is required to prevent overcharging conditions that will dry out the cells of the battery. Constant current battery chargers (including trickle chargers) can damage AGM batteries.

To maintain a full charge between rides, a Harley-Davidson constant monitoring battery charger or tender is recommended when your motorcycle will not be ridden for more than two weeks, with the best practice of installing the charger any time the motorcycle is not in use. Harley-Davidson offers the 750mA SUPERSMART BATTERY TENDER (94654-98B, North America) and 800mA WATERPROOF BATTERY TENDER (international versions available). These battery tenders include a quick disconnect cable, allowing easy connection to charge the battery without disassembly of the motorcycle.

Lack of regular battery charging or use of constant current battery chargers may void battery warranty.

Voltage Test

1. Check the voltage of the battery to verify that it is in a 100 percent fully charged condition.
2. If the open circuit (disconnected) voltage reading is below 12.7 V, charge the battery.
3. Check the voltage again after one to two hours.

Fuses and Relays

For electrical problems, see a Harley-Davidson dealer who has the necessary parts and equipment to perform electrical services.

NOTES:

- *Fuses do not reset.*

- *Only replace a fuse with a fuse of the same rating.*
- *Use only automotive type ATO fuses as replacements.*

Main Fuse

NOTE:

The amperage of the main fuse is 40A.

Remove the main fuse whenever you perform maintenance on your motorcycle.

1. Turn ignition off.
2. Remove right side cover. See Side Covers.
3. See Fuse Panel and Main Fuse Location. Remove the main fuse (2).
4. Install the fuse when maintenance is complete.

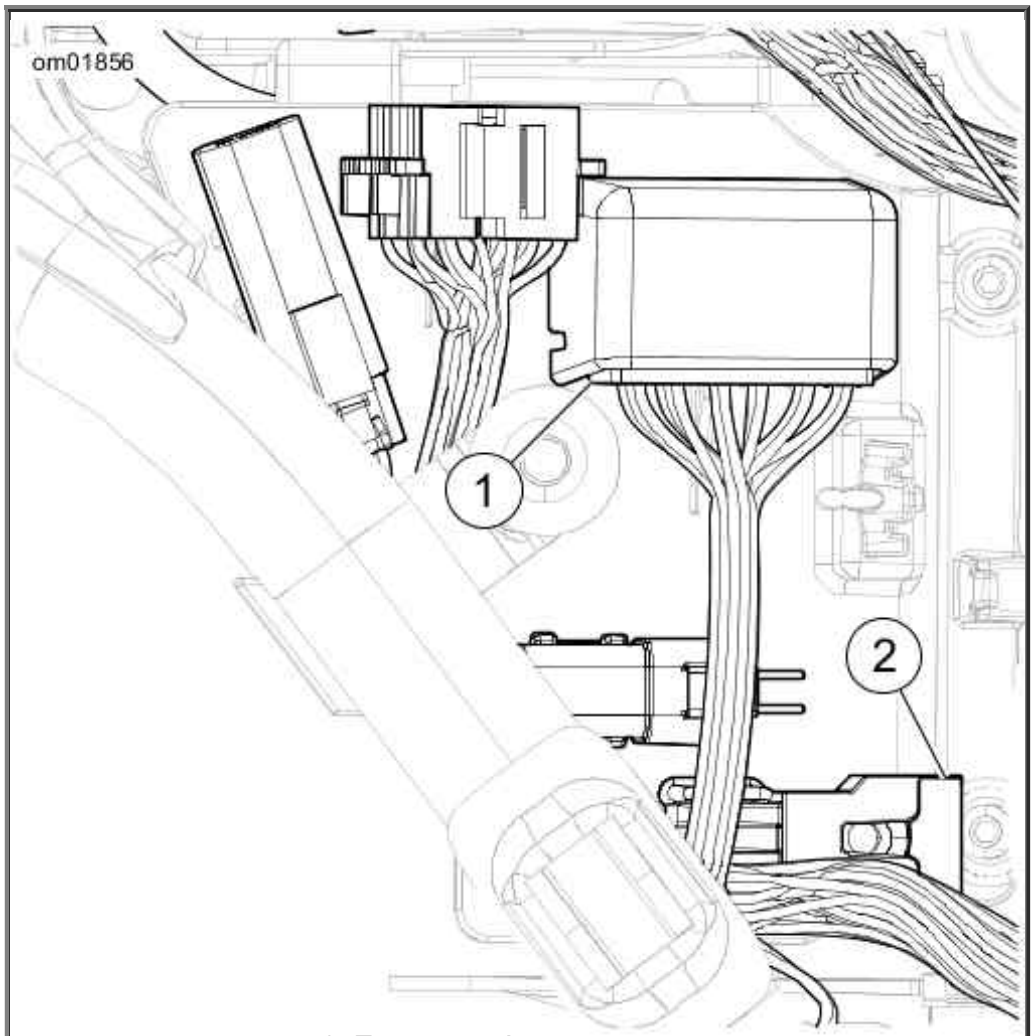

1. Fuse panel cover
2. Main fuse

Fuse Panel and Main Fuse Location

Replacing Fuses

1. Turn ignition off.

2. Remove right side cover. See Side Covers.

3. See Fuse Panel and Main Fuse Location. Remove the fuse panel (1) cover.

4. See Relay and Fuse Identification. Remove the suspect fuse and inspect the element.

   Replace the fuse if the element is burned or separated. Refer to Relay and Fuse Identification.

5. Install the fuse panel cover so the tabs snap into place.

6. Install right side cover.

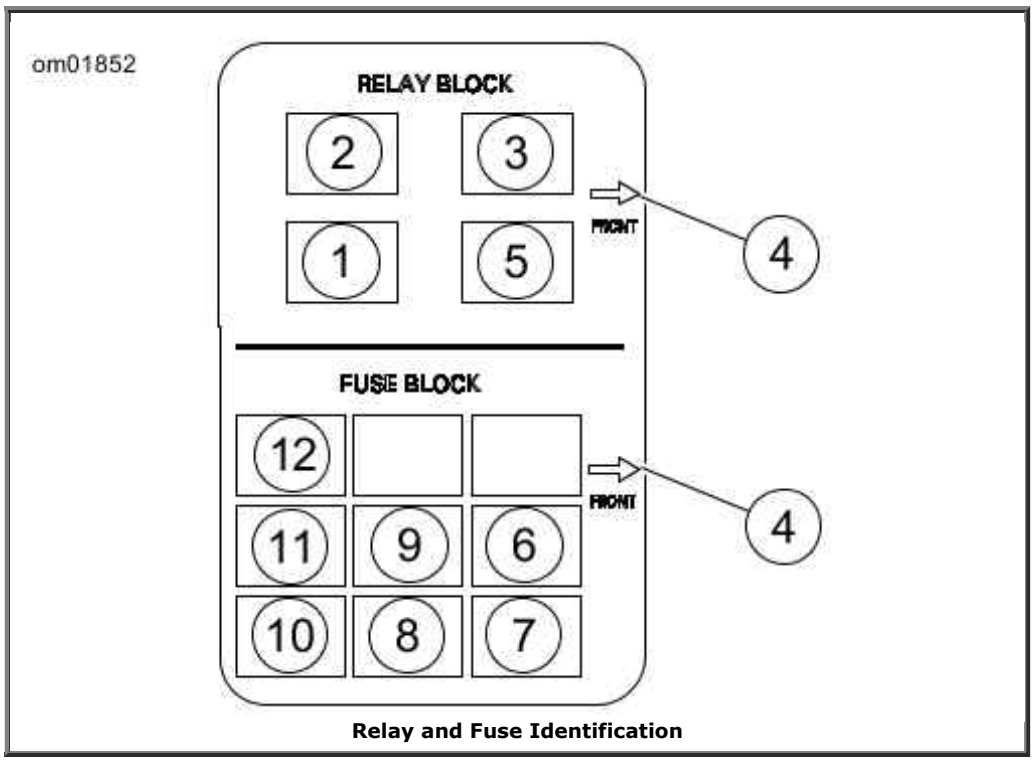

Relay and Fuse Identification

ITEM	DESCRIPTION
1	Starter relay
2	System relay
3	Ignition relay
4	Front of vehicle
5	Cooling relay
6	Lights and instruments fuse - 10 A
7	Accessory fuse - 5 A
8	Fan fuse - 10 A
9	Lights fuse - 10 A
10	Ignition fuse - 15 A
11	Fuel pump fuse - 10 A
12	Battery fuse - 5 A

Relays

If you suspect an issue with a relay, see the service manual, electric diagnostic manual or an authorized dealer.

Side Covers

See Right Side Cover. The procedure for removing the side cover is the same for the left and right sides.

1. **Remove:** Pull side cover (1) to release posts from grommets (2).
2. **Install:** Align side cover posts with grommets (2).
3. Press side cover until posts are fully seated in grommets.

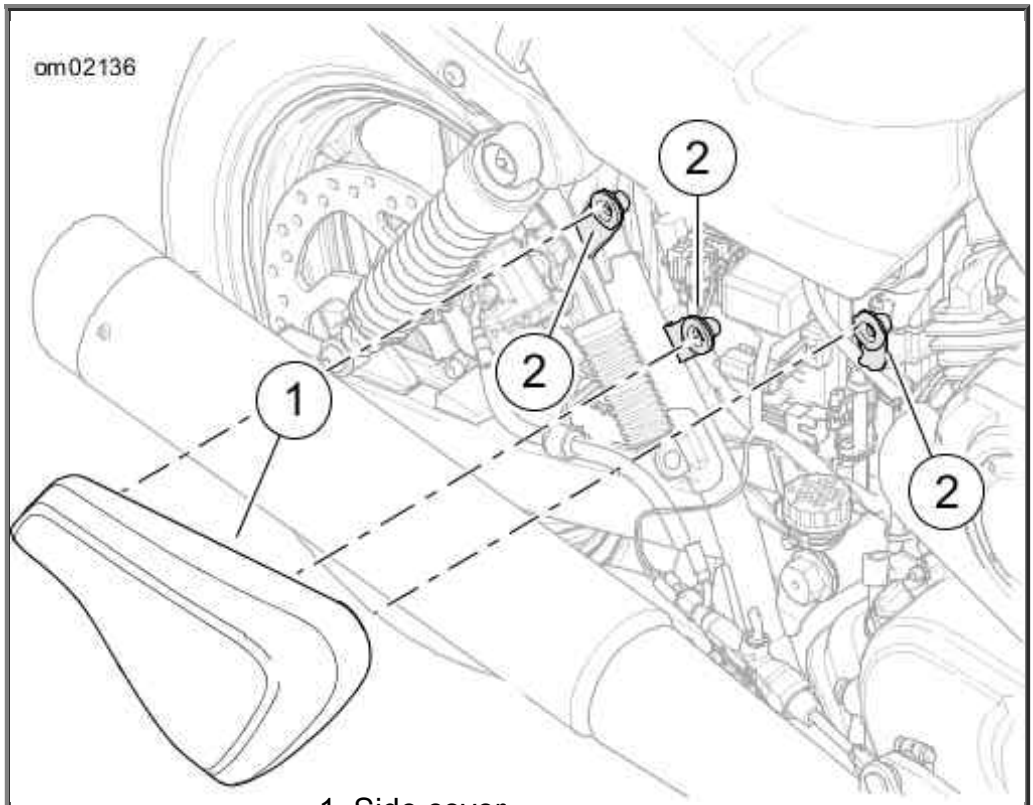

1. Side cover
2. Grommet (3)

Right Side Cover

Headlamp

Checking Headlamp Alignment

1. Check tire pressure. Refer to Tires and Tire Pressure.
2. Adjust rear shocks for the rider and intended load. See Before Riding.
3. Fill fuel tank or add an equal amount of ballast.

NOTE:

Choose a wall in minimum light.

4. See Checking Headlamp Alignment. Park the motorcycle in a line (1) perpendicular to the wall.
5. Position motorcycle with front axle 25 ft 7.6 m from wall.
6. Draw a vertical line (2) on the wall.
7. Point the front wheel straight forward at the wall.
8. Measure the distance (4) from the floor to the center of the high beam bulb.
9. Activate high beam. Verify headlamp alignment.
10. Adjust if necessary.

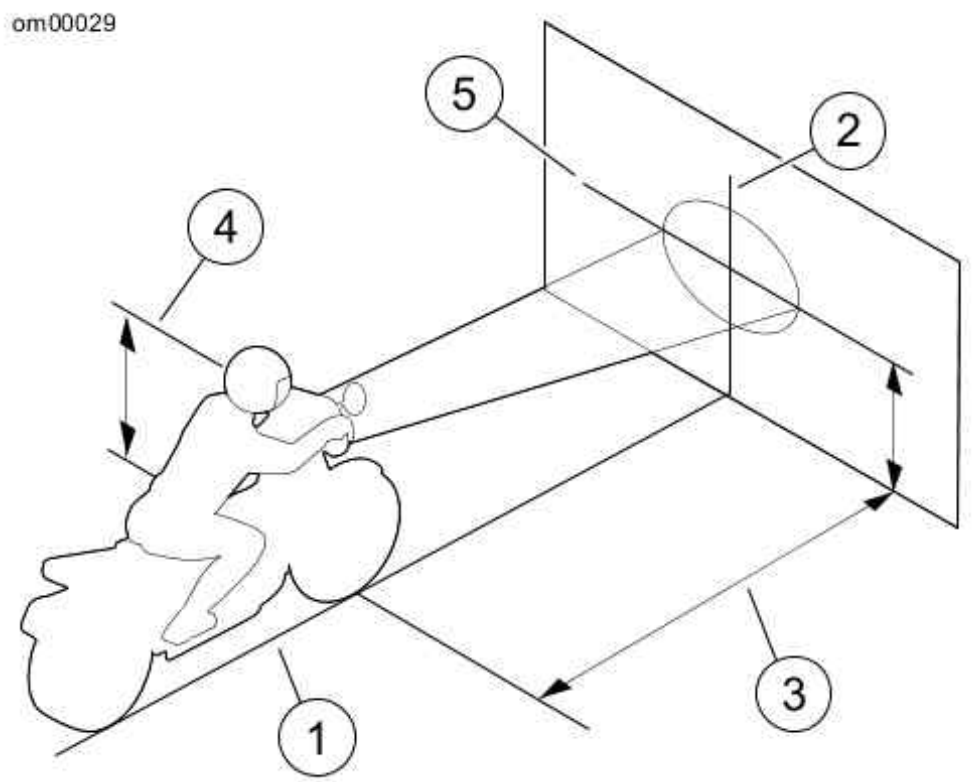

1. Perpendicular line
2. Vertical line
3. 7.6 m (25 ft)
4. High beam bulb centerline
5. Horizontal line 53.3 mm (2.1 in) lower than bulb centerline

Checking Headlamp Alignment

Adjusting Headlamp

Set Horizontal Adjustment

1. See Headlamp Speed Screen. Remove speed screen screws (1) and washers (2).
2. Pull speed screen away from upper speed screen bracket (4).
3. Pull speed screen way from lower speed screen bracket (5) to remove posts (6) from

grommets.

4. See Headlamp Adjustment. Loosen horizontal adjustment locknut (1).
5. Direct light beam straight ahead.
6. Tighten horizontal adjustment locknut to 20.3-32.5 ft-lbs (27.5-32.5 Nm).

   NOTE:

   Perform all adjustments before installing speed screen.

7. See Headlamp Speed Screen. Align posts of speed screen (3) with grommets.
8. Install speed screen onto lower speed screen bracket (5).
9. Align speed screen to upper speed screen bracket (4).
10. Install washers (2) and screws (1). Tighten to 21-29 in-lbs (2.3-3.3 Nm).

Set Vertical Adjustment

1. See Headlamp Adjustment. Loosen locknut (1) for vertical adjustment bolt (2)
2. Aim headlamp at horizontal line on wall.
3. Tighten vertical adjustment locknut to 16-18 ft-lbs (20.6-25.5 Nm).

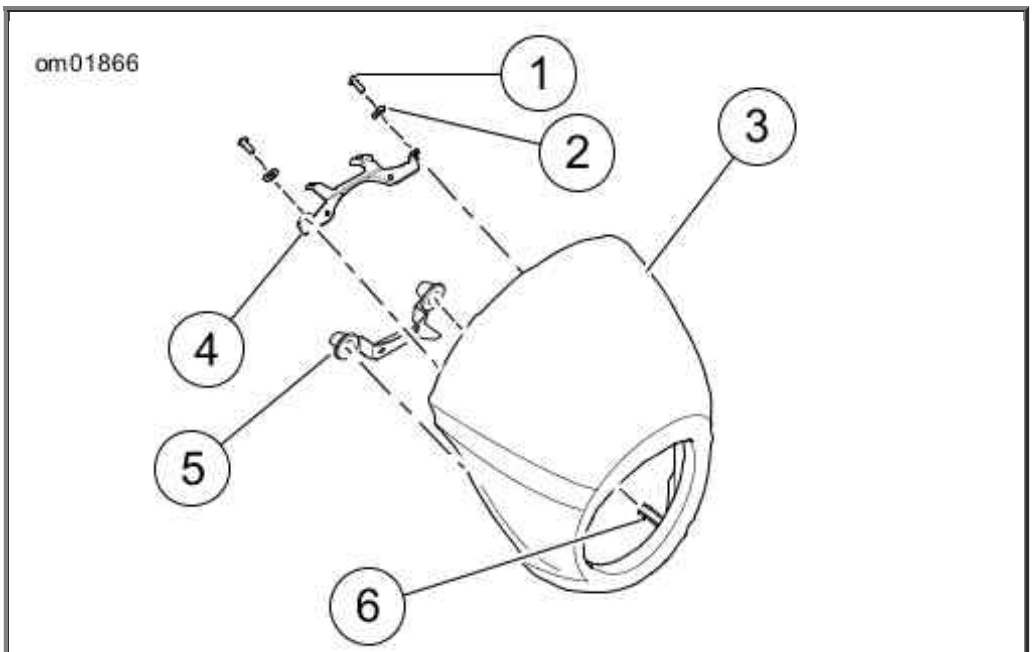

1. Screw (2)
2. Washer (2)
3. Speed screen
4. Upper speed screen bracket
5. Lower speed screen bracket
6. Post (2)

Headlamp Speed Screen

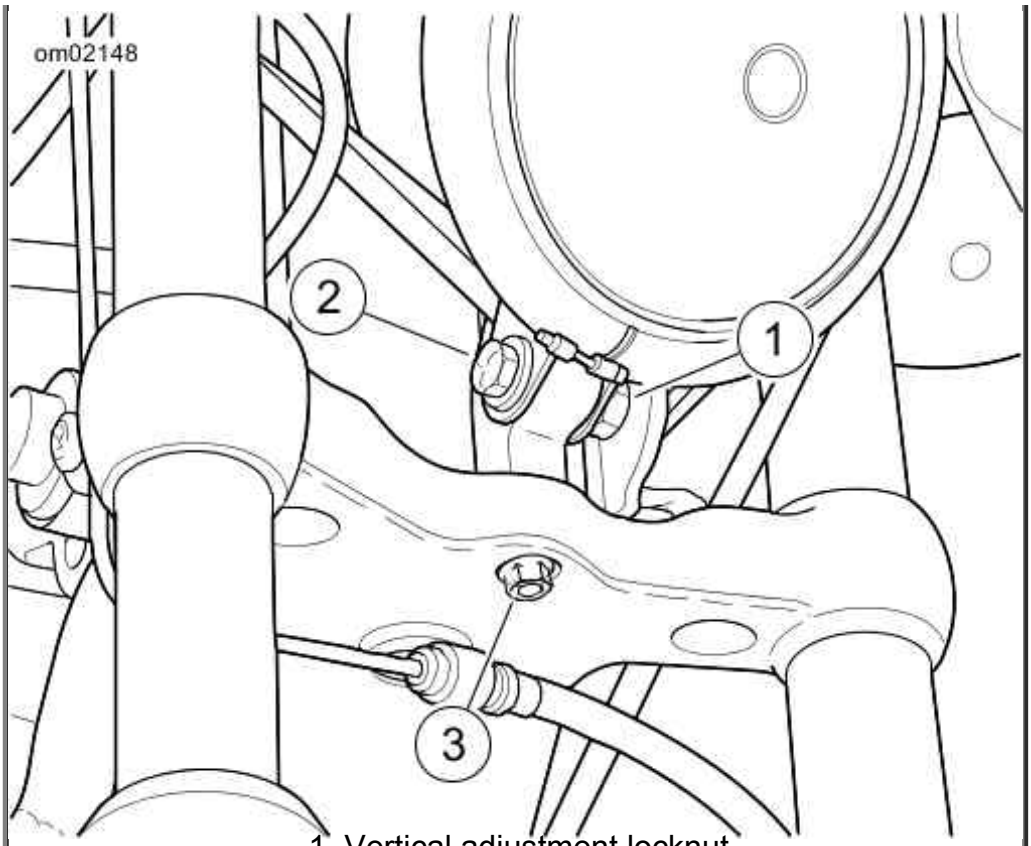

1. Vertical adjustment locknut
2. Vertical adjustment bolt
3. Horizontal adjustment locknut

Headlamp Adjustment

Replacing Headlamp or Position Bulb

WARNING

The automatic-on headlamp feature provides increased visibility of the rider to other motorists. Be sure headlamp is on at all times. Poor visibility of rider to other motorists can result in death or serious injury. (00030b)

1. See Headlamp Speed Screen. Remove screws (1) and washers (2).
2. Pull speed screen away from upper speed screen bracket (4).
3. Pull speed screen way from lower speed screen bracket (5) to remove posts (6) from grommets.
4. Remove main fuse. See Fuses and Relays.
5. See Headlamp Bulb. Remove screws (6).
6. Pull lens assembly (5) from headlamp housing.
7. Disconnect electrical connectors from headlamp and position bulbs.
8. Loosen screw (2).

9. Remove retainer (3).
10. Remove headlamp bulb (4).
11. Remove position bulb (7).
12. Install **new** headlamp or position bulb.
13. Install retainer (3).
14. Tighten screw (2).
15. Connect electrical connectors to headlamp and position bulbs.
16. Attach lens assembly (5) to headlamp housing.
17. Install screws (6).
18. See Headlamp Speed Screen. Align posts of speed screen (3) with grommets.
19. Install speed screen onto lower speed screen bracket (5).
20. Align speed screen to upper speed screen bracket (4).
21. Install washers (2) and screws (1). Tighten to 21-29 in-lbs (2.3-3.3 Nm).
22. Install main fuse. See Fuses and Relays.

⚠WARNING

Be sure that all lights and switches operate properly before operating motorcycle. Low visibility of rider can result in death or serious injury. (00316a)

23. Check operation of all lamps.

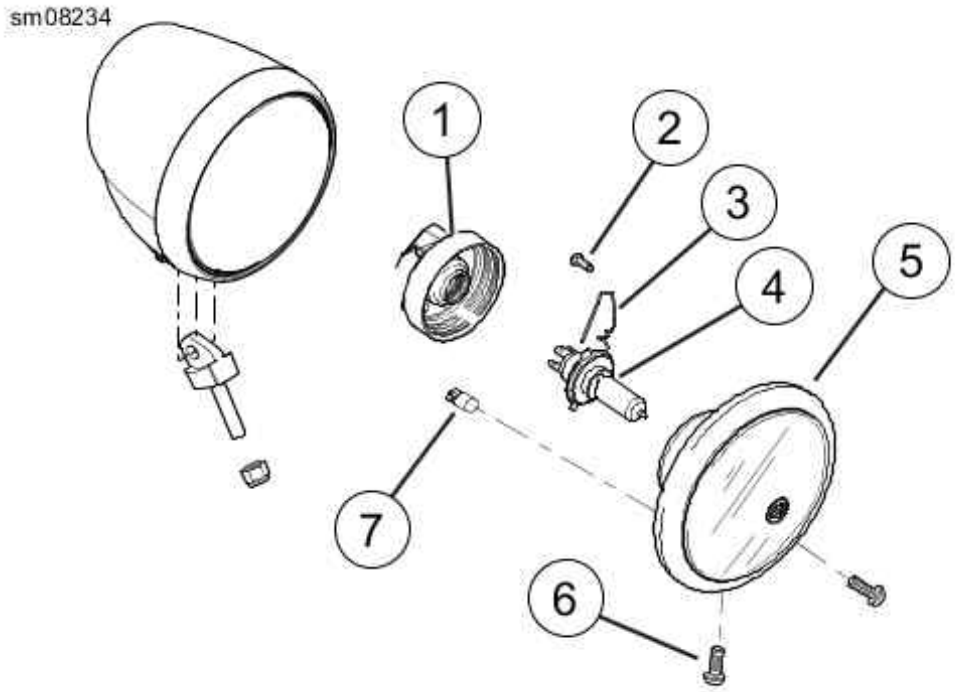

1. Boot
2. Screw
3. Retainer
4. Headlamp bulb
5. Lens assembly
6. Screw (2)
7. Position bulb

Headlamp Bulb

Tail Lamp

Replacing Tail Lamp Bulb

The tail lamp is an LED assembly. Replace the tail lamp as a unit. See a Harley-Davidson dealer.

Turn Signals

Replacing Turn Signal Bulb

1. Remove main fuse. See Fuses and Relays.
2. See Turn Signal Bulb. Remove screw (5).
3. Pull lens (3) away from turn signal base (1).
4. Remove bulb (2).
5. Install **new** bulb (2).
6. Align tab (4) with turn signal base (1).

7. Install lens (3).
8. Install screw (5). Tighten to 5-7 in-lbs (0.6-0.8 Nm).
9. Install main fuse. See Fuses and Relays.

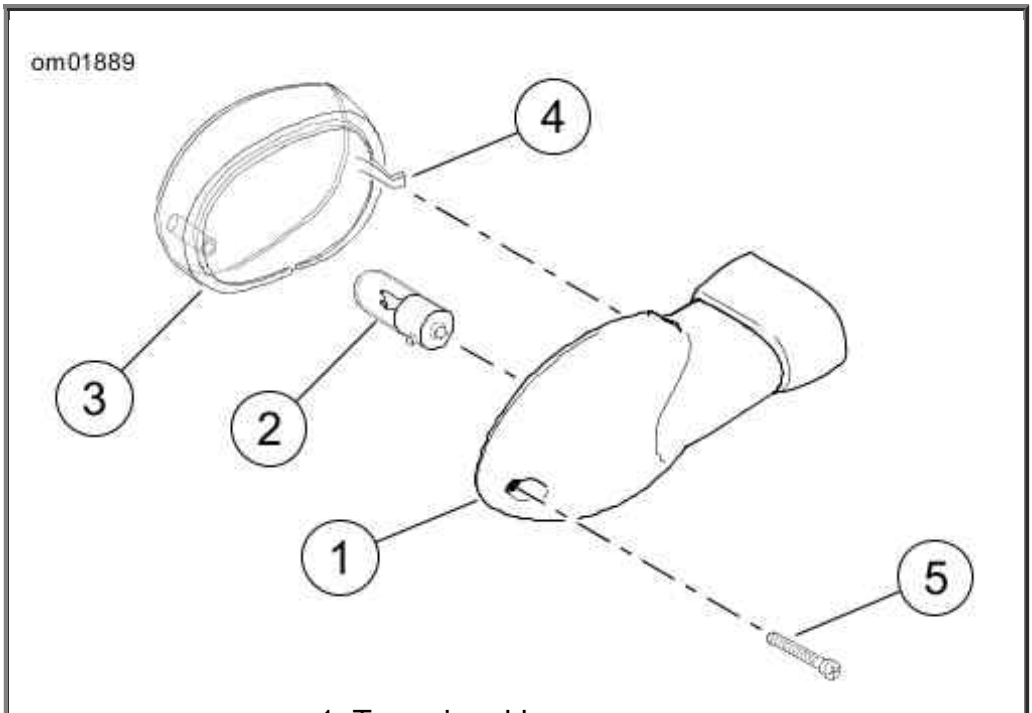

1. Turn signal base
2. Bulb
3. Lens
4. Tab
5. Screw

Turn Signal Bulb

Seat

Removing Seat

1. See Seat Removal. Remove seat retention screw (6).
2. Slide seat (1) rearward to release from seat retention tab (3).
3. Slide seat forward and above fuel tank (2).
4. Pull seat forward through seat strap (4).

Installing Seat

1. See Seat Removal. Insert rear of seat (1) through seat strap (4).
2. Slide seat forward and on to seat retention tab (3).

⚠WARNING

After installing seat, pull upward on seat to be sure it is

After installing seat, pull upward on seat to be sure it is locked in position. While riding, a loose seat can shift causing loss of control, which could result in death or serious injury. (00070b)

3. Install seat retention screw (6). Tighten to 20.3-40.0 in-lbs (2.3-4.5 Nm).

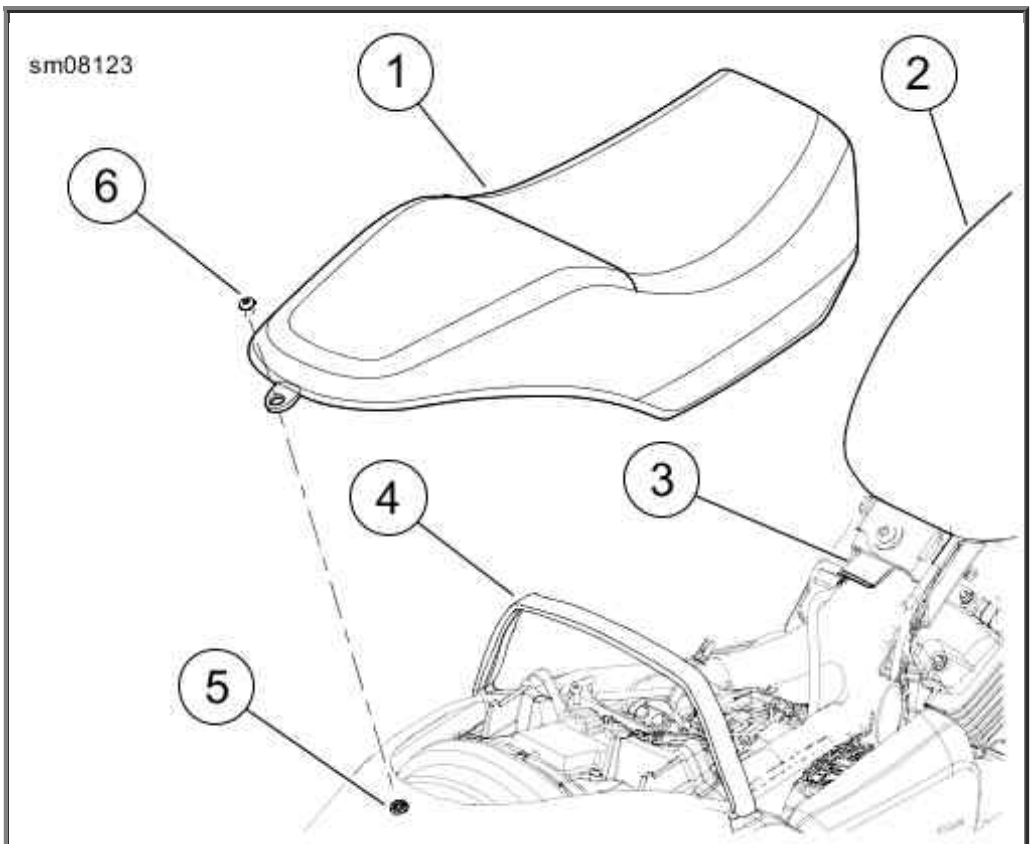

1. Seat
2. Fuel tank
3. Seat retention tab
4. Seat strap
5. Seat retention nut
6. Seat retention screw

Seat Removal

Noise Control System

Tampering

Removal or replacement of any noise control system component may be prohibited by law. This prohibition includes modifications made prior to vehicle sale or delivery to the ultimate purchaser. Use of a vehicle on which noise control system components have been removed or rendered inoperative may also be prohibited by law.

Specifications

Specifications

NOTES:

- *Specifications in this publication may not match those of official certification in some markets due to timing of publication printing, variance in testing methods, and/or motorcycle differences. Customers seeking officially recognized regulatory specifications for their motorcycle should refer to certification documents and/or contact their respective dealer or distributor.*
- *Harley-Davidson reserves the right to change specifications, equipment or designs at any time without notice and without incurring obligation.*

Tires

Tires and Tire Pressure

MODEL	MOUNT	SIZE	SPECIFIED TIRE	PRESSURE (COLD)	
				kPa	psi
XG500, XG750	Front	17 in	MRF Zapper (India only): 100/80-17	207	30
XG500, XG750	Rear	15 in	MRF Zapper (India only): 150/70-15	276	40
XG500, XG750	Front	17 in	Michelin Scorcher 11: 100/80-17	234	34
XG500, XG750	Rear	15 in	Michelin Scorcher 11: 140/75R15	290	42

Weights and Dimensions

Weights

ITEM	XG500		XG750	
	kg	lb	kg	lb
Running weight*	222	489	222	489
Maximum added weight allowed**	209	461	209	461
GVWR	431	950	431	950
GAWR front**	145	320	145	320
GAWR rear**	286	630	286	630
* The total weight of the motorcycle as delivered with all oil/fluids and approximately 90% of fuel.				
** The total weight of accessories, cargo, riding gear, passenger and rider cannot exceed this weight.				

Dimensions

ITEM	XG500		XG750	
	mm	in	mm	in
Overall length	2225	87.6	2225	87.6
Overall width	820	32.3	820	32.3
Wheelbase	1534	60.4	1534	60.4
Ground clearance	145	5.7	145	5.7
Seat height*	654	25.7	654	25.7

*With 180 lb 81.7 kg rider on seat.

Capacities

Capacities

ITEM	CAPACITY	
	METRIC	U.S.
Fuel tank	13.1 L	3.5 gal
Low fuel indicator (approximate)	3.1 L	0.8 gal
Engine oil (wet)	3.1 L	3.3 qt
Engine oil (dry)	3.3 L	3.5 qt
Coolant	1.3 L	1.4 qt

Engine and Transmission

Revolution X Engine Specifications

ITEM	XG500	XG750
Cylinders	2	
Type	60 degree, liquid cooled V-Type	
Compression ratio	11.0:1	10.5:1
Bore	2.72 in 69 mm	3.35 in 85 mm
Stroke	2.60 in 66 mm	2.60 in 66 mm
Displacement	30 in^3 494 cm^3	46 in^3 749 cm^3
Lubrication system	Pressurized, wet sump	

Transmission Specifications

ITEM	SPECIFICATION
Type	Constant mesh, foot shift
Speeds	6 forward

Overall Gear Ratios

GEAR	RATIO
First gear	14.25
Second gear	10.07

Third gear	7.45
Fourth gear	5.99
Fifth gear	5.04
Sixth gear	4.53

Electrical

Electrical Specifications

ITEM	SPECIFICATION	
Ignition timing	Not adjustable	
Battery	12 V, 12 Ah, 225 CCA sealed and maintenance-free	
Charging system	Three-phase, 35 A system (17.7 A @ 1000 rpm)	
Spark plug size	10 mm	
Spark plug gap	0.8-0.9 mm	0.031-0.035 in
Spark plug torque	10-12 Nm	89-106 **in-lbs**

Troubleshooting

Troubleshooting: General

⚠WARNING

The troubleshooting section of the Owner's Manual is a guide to diagnose problems. Read the service manual before performing any work. Improper repair and/or maintenance could result in death or serious injury. (00080a)

Engine

Starter Does Not Operate or Does Not Turn Engine Over

1. Engine off/run switch in off position.
2. Ignition switch not on.

3. Discharged battery or loose or corroded connections (solenoid chatters).
4. Clutch lever not squeezed against handlebar or transmission not in neutral.
5. Failed fuse.

Engine Turns Over But Does Not Start

---

1. Engine off/run switch in off position.
2. Fuel tank empty.
3. Fuel filter clogged.
4. Discharged battery or loose or damaged battery terminal connections.
5. Fouled spark plugs.
6. Spark plug coil connections loose or in bad condition and shorting.
7. Loose or corroded wire or cable connections at coil or battery.
8. Fuel pump inoperative.
9. Failed fuse.

Starts Hard

---

1. Spark plugs in bad condition, have improper gap or are partially fouled.
2. Battery nearly discharged.
3. Loose wire or cable connections at one of the battery terminals or at coil.
4. Engine oil too heavy (cold-weather operation).
5. Fuel tank vent plugged or fuel line closed off, restricting fuel flow.
6. Water or dirt in fuel system.
7. Fuel pump inoperative.

Starts But Runs Irregularly or Misses

---

1. Spark plugs in bad condition or partially fouled.
2. Spark plug gap too close or too wide.
3. Battery nearly discharged.
4. Damaged wire or loose connection at battery terminals or coils.
5. Intermittent short circuit due to damaged wire insulation.

6. Water or dirt in fuel system, filter or carburetor.
7. Fuel vent system plugged. See dealer.
8. One or more injectors fouled.

A Spark Plug Fouls Repeatedly

1. Incorrect spark plug.

Pre-ignition or Detonation (Knocks or Pings)

1. Incorrect fuel.
2. Incorrect spark plug for the kind of service.

Overheats

1. Insufficient oil supply or oil not circulating.
2. Heavy carbon deposit from lugging engine. See dealer.

Excessive Vibration

1. Rear fork pivot shaft nuts loose. See dealer.
2. Front engine mounting bolts loose. See dealer.
3. Damaged frame. See dealer.
4. Belt badly worn.
5. Wheels and/or tires damaged. See dealer.
6. Vehicle not properly aligned. See dealer.

Engine Oil Not Circulating (Oil Pressure Lamp Lit)

1. Insufficient or diluted oil supply.
2. Oil feed clogged with ice and sludge in freezing weather.
3. Grounded oil signal switch wire. See dealer.
4. Damaged or improperly installed check valve. See dealer.
5. Oil pump problem. See dealer.

Cooling System

Overheats

1. Low coolant level or improper coolant.
2. Cooling fans not operating.
3. Air flow through the radiator is obstructed.
4. Blocked coolant passages.
5. Temperature gauge malfunction.
6. Radiator cap problem.
7. Thermostat malfunction.

Electrical System

Alternator Does Not Charge

1. Regulator not grounded. See dealer.
2. Engine ground wire loose or damaged. See dealer.
3. Loose or damaged wires in charging circuit. See dealer.

Alternator Charge Rate is Below Normal

1. Weak battery.
2. Excessive use of add-on accessories.
3. Loose or corroded connections.
4. Extensive periods of idling or low speed riding.

Transmission

Transmission Shifts Hard

1. Bent shifter rod. See dealer.
2. Transmission shifting mechanism needs adjustment. See dealer.

Transmission Jumps Out of Gear

1. Shifter rod improperly adjusted. See dealer.
2. Shifter forks (inside transmission) improperly adjusted. See dealer.

3. Worn shifter dogs in transmission. See dealer.

Clutch Slips

1. Clutch controls improperly adjusted. See dealer.
2. Worn friction discs. See dealer.
3. Insufficient clutch spring tension. See dealer.

Clutch Drags or Does Not Release

1. Clutch controls improperly adjusted. See dealer.
2. Insufficient clutch spring tension. See dealer.
3. Clutch discs warped. See dealer.

Clutch Chatters

1. Friction discs or steel discs worn or warped. See dealer.

Brakes

Brakes Do Not Hold Normally

1. Master cylinder low on fluid. See dealer.
2. Brake line contains air bubbles. See dealer.
3. Master or wheel cylinder piston worn. See dealer.
4. Brake pads contaminated with grease or oil. See dealer.
5. Brake pads badly worn. See dealer.
6. Brake disc badly worn or warped. See dealer.
7. Brake fades because of heat build up. Excessive braking or brake pads dragging. See dealer.
8. Brake drags. See dealer.

Warranties

General Warranty Information

This owner's manual contains your new motorcycle limited warranty and your owner's maintenance record.

It is your responsibility as the owner to follow the maintenance schedule at the mileage intervals as specified in this owner's manual. All of the specified maintenance services must be performed to keep your limited warranty valid.

Some countries, states or other locations may require all regular maintenance and service work to be done by an authorized Harley-Davidson dealer for your limited warranty to remain in effect. Check with your authorized Harley-Davidson dealer for local requirements.

1. Make an appointment with a Harley-Davidson dealer for inspection and service prior to the first 1000 mi 1600 km , and as soon as possible after any problem arises.

2. Bring this owner's manual with you when you visit your authorized Harley-Davidson dealer to have your motorcycle inspected and serviced.

3. Have the dealer technician sign the maintenance record in this owner's manual at the proper mileage interval. These records should be retained by the owner as proof of proper maintenance.

4. Keep receipts covering any parts, service or maintenance performed.

These records should be transferred to each subsequent owner.

Use only Harley-Davidson approved parts and accessories that have been designed, tested and approved for your model and model year motorcycle.

Use of certain manufacturers' aftermarket performance parts may void all or parts of your limited warranty. See an authorized Harley-Davidson dealer for details.

Harley-Davidson authorized dealerships are independently owned and operated and may sell parts and accessories that are not manufactured or approved by Harley-Davidson for use on your motorcycle. Therefore, you should understand that Harley-Davidson is not and cannot be responsible for the quality, suitability or safety of any non-Harley-Davidson part, accessory or design modification, including labor, which may be sold and/or installed by authorized Harley-Davidson dealerships.

Keeping it All Harley-Davidson

Genuine Harley-Davidson parts are engineered and tested specifically for use on your motorcycle. Insist that your authorized Harley-Davidson dealer uses only genuine Harley-Davidson replacement parts and accessories to keep your Harley-Davidson motorcycle and its limited warranty intact.

Installing off-road or competition parts to enhance performance may void all or part of your new motorcycle limited warranty. See the Harley-Davidson Motorcycle Limited Warranty in this manual or an authorized Harley-Davidson dealer for details.

California and Select International Markets Evaporative Emission Controls: 2016 Models

All new 2016 Harley-Davidson motorcycles sold in the State of California and select international markets have an evaporative emission control system. This system is designed to meet CARB and local regulations in effect at the time of manufacture.

The system requires a small amount of maintenance. Periodically inspect system to verify that

hoses are properly routed, not kinked or blocked and that all fittings are secure. Periodically check mounting hardware for tightness.

EPA Noise Regulations in the United States

EPA noise regulations require that the following statements be included in the Owner's Manual.

EPA Regulations

TAMPERING WITH NOISE CONTROL SYSTEM PROHIBITED: Federal law prohibits the following acts or the causing thereof: (1) The removal or rendering inoperative by any person other than for purposes of maintenance, repair, or replacement of any device or element of design incorporated into any new vehicle for the purpose of noise control prior to its sale or delivery to the ultimate purchaser or while it is in use, or (2) the use of the vehicle after such device or element of design has been removed or rendered inoperative by any person.

AMONG THOSE ACTS PRESUMED TO CONSTITUTE TAMPERING ARE THE FOLLOWING:

1. Replacing the muffler(s) and/or the entire exhaust system with parts not certified to be noise legal for street use.
2. Removing or modifying the muffler internal baffles in any way.
3. Replacing the air intake/cleaner assembly with one not certified to be noise legal for street use.
4. Modifying the air intake/cleaner assembly in such a way as to make the vehicle no longer noise legal for street use.

Harley-Davidson recommends that any and all noise related maintenance be done by an authorized Harley-Davidson dealer using Genuine Harley-Davidson parts.

Warranty/Service Information

Any authorized Harley-Davidson dealer may provide warranty repair work on your motorcycle. The fact that an authorized Harley-Davidson dealership performs warranty repairs does not create an agency relationship between Harley-Davidson and the authorized dealership. If you have any questions regarding warranty obligations contact your authorized Harley-Davidson dealer.

For normal service work or warranty work under the above conditions, you may obtain the name and location of your nearest U.S. authorized Harley-Davidson dealer by calling 1-800-258-2464 (U.S. only). To find dealers worldwide, see www.harley-davidson.com.

Reporting Safety Defects in the United States

Safety defects must be reported to the National Highway Traffic Safety Administration (NHTSA) and Harley-Davidson.

NHTSA Statement

If you believe that your motorcycle has a defect which could cause a crash or could cause injury or death, you should immediately inform the National Highway Traffic Safety Administration

(NHTSA) in addition to notifying Harley-Davidson.

If NHTSA receives similar complaints, it may open an investigation, and if it finds that a safety defect exists in a group of motorcycles, it may order a recall and remedy campaign. However, NHTSA cannot become involved in individual problems between you, your authorized Harley-Davidson dealer, or Harley-Davidson.

You can contact NHTSA through the following means. Additional information about motor vehicle safety is available through the website.

Telephone: Vehicle Safety Hotline (toll-free) at 1-888-327-4236 (TTY: 1-800-424-9153).

Website: www.safercar.gov

Address: Administrator, NHTSA, 400 Seventh Street SW, Washington, DC 20590

Required Documentation for Imported Motorcycles

If a Harley-Davidson motorcycle is imported into the United States, additional documentation is required for that motorcycle to be eligible for the United States Harley-Davidson Motorcycle Limited Warranty. An authorized Harley-Davidson dealer can provide a form explaining the requirements.

Owner Contact Information

If you move from your present address, sell your motorcycle, or purchase a pre-owned Harley-Davidson motorcycle, see an authorized Harley-Davidson dealer to update your owner contact information.

This will provide Harley-Davidson with an accurate registration (as required by law in some countries), and will allow Harley-Davidson to notify you in the event of a recall or product program.

The rights and benefits conferred upon you and the obligations of Harley-Davidson as set forth herein are separate and distinct from any rights and duties set forth in any service contract you may have purchased from a dealership and/or third-party insurance company. Harley-Davidson does not authorize any entity to expand Harley-Davidson's warranty obligations in connection with your motorcycle or this limited warranty.

When updating your contact information, your authorized Harley-Davidson dealer will need your Vehicle Identification Number (VIN), odometer mileage, and date of vehicle transfer (if applicable).

Questions and Concerns

If you have questions or concerns regarding the performance of your motorcycle or the application of the limited warranty described here, or are not satisfied with the service you are receiving from an authorized Harley-Davidson dealership, do the following:

1. Contact the selling and/or servicing dealership and speak to the sales and/or service manager.

2. If your concern cannot be addressed to your satisfaction by the dealership, contact the Harley-Davidson Customer Support Center by mailing your concern to the following address or calling the phone number below.

In the U.S., state warranty laws, often referred to as lemon laws, may provide you with certain

rights not specifically mentioned here. To the extent allowed by your state, Harley-Davidson requests that you first send written notification of any defect or warranty non-conformity that you have experienced with your motorcycle to Harley-Davidson. Harley-Davidson appreciates the opportunity to investigate your concerns and restore your satisfaction in your motorcycle by making the necessary repairs consistent with the terms of Harley-Davidson's limited warranty. Harley-Davidson requests that you send your complaint to the Harley-Davidson Customer Support Center.

- Harley-Davidson Motor Company
- Attention: Harley-Davidson Customer Support Center
- P.O. Box 653
- Milwaukee, Wisconsin 53201
- 1-800-258-2464 (U.S. only)
- 1-414-343-4056

This warranty does not mean that each Harley-Davidson motorcycle is free from defects. Defects may be unintentionally introduced into motorcycles during the design and manufacturing processes and such defects could result in the need for repairs. For this reason, Harley-Davidson provides the Limited Warranty in order to remedy any such defects that result in a component malfunction or failure during the warranty period. The remedy under this written warranty, and any implied warranty, is limited to repair, replacement or adjustment of the defective part. This exclusive remedy shall not be deemed to have failed its essential purpose so long as Harley-Davidson, through its authorized dealers, is willing and able to repair, replace or adjust defective parts in the prescribed manner. Harley-Davidson's liability, if any, shall in no event exceed the cost of correcting any defect as herein provided and upon expiration of this warranty, any such liability shall terminate.

2016 Harley-Davidson Motorcycle Limited Warranty

---

24 Months/Unlimited Miles

Harley-Davidson warrants for any new 2016 Harley-Davidson motorcycle that an authorized Harley-Davidson dealer will repair or replace without charge any parts found under normal use to be defective in factory materials or workmanship. Such repair or replacement of defective parts will be Harley-Davidson's sole obligation and your sole and exclusive remedy under this limited warranty. This limited warranty applies only for the duration identified below.

No person, including Harley-Davidson dealers, may modify, extend or waive any part of this warranty.

As a condition of this warranty, you are responsible for properly using, maintaining, and caring for your motorcycle as outlined in your Owner Manual. Harley-Davidson recommends that you maintain copies of all maintenance records and receipts.

THERE IS NO OTHER EXPRESS WARRANTY (OTHER THAN THE SEPARATE EMISSIONS, NOISE, AND RADIO LIMITED WARRANTIES) ON THE MOTORCYCLE. Any implied warranty of merchantability or fitness for particular purpose is limited to the duration of the express warranty, or to the duration set forth in your state's warranty statutes, whichever is shorter. Any implied warranty is not transferred to subsequent purchasers/buyers of the motorcycle.

The implied warranty of fitness for a particular purpose does not apply if your motorcycle is used for racing, even if the motorcycle is equipped for racing.

Some states do not allow limitations on how long an implied warranty lasts, so the above limitation

may not apply to you.

TO THE FULLEST EXTENT ALLOWED BY LAW, NEITHER HARLEY-DAVIDSON NOR ITS AUTHORIZED DEALERS SHALL BE LIABLE FOR LOSS OF TIME, INCONVENIENCE, LOSS OF MOTORCYCLE USE, COMMERCIAL LOSS OR ANY OTHER INCIDENTAL OR CONSEQUENTIAL DAMAGES.

Harley-Davidson and your dealer are not responsible for any time or income that you lose, any inconvenience, the loss of your transportation or use of your motorcycle, the cost of a rental motorcycle, fuel, travel, meals, or lodging, or for any other incidental or consequential damages you may have.

Punitive, exemplary, or multiple damages may not be recovered unless applicable law prohibits their disclaimer. You may not bring any warranty-related claim as a class representative, a private attorney general, a member of a class of claimants or in any other representative capacity. Harley-Davidson shall not be liable for any damages caused by delay in delivery or furnishing of any products and/or services.

Some states do not allow the exclusion or limitation of incidental or consequential damages, so the above limitation or exclusion may not apply to you.

This warranty gives you specific legal rights, and you may also have other rights which vary from state to state.

The following terms and conditions apply to this limited warranty:

Duration

1. The duration of this limited warranty is twenty-four months, starting from the earlier of (a) the date of initial retail purchase and delivery of the motorcycle from an authorized Harley-Davidson dealer, or (b) the third anniversary of the last day of the model year of the motorcycle. Your authorized Harley-Davidson dealer will submit an electronic Sales and Warranty Registration form to initiate your limited warranty.

2. Any unexpired portion of this limited warranty will be transferred to subsequent owners, upon the resale of the motorcycle during the limited warranty period.

Owner's Obligations

To obtain warranty service, return your motorcycle at your expense within the limited warranty period to an authorized Harley-Davidson dealer. The authorized Harley-Davidson dealer should be able to provide warranty service during normal business hours, depending upon the workload of the authorized dealer's service department and the availability of necessary parts.

Exclusions

This limited warranty will not apply to any motorcycle.

1. Which has not been operated or maintained as specified in the owner's manual.

2. Which has been abused, neglected, misused, improperly stored, used "off the highway," or used for racing or competition of any kind.

3. Which is not manufactured to comply with the laws of the market in which it is registered.

4. Which has off-road or competition parts installed to enhance performance, a trailer hitch, or has other unapproved modifications (even if these modifications include genuine Harley-Davidson parts and accessories that are not approved for use on your motorcycle). These modifications may void all or parts of your new motorcycle limited warranty. See an authorized Harley-Davidson dealer for details.

5. Which has been subjected to an act of God, war, riot, insurrection, nuclear contamination, natural disasters, including, but not limited to, lightning, forest fires, dust storms, hail storms, ice storms, earthquakes, or floods, or other circumstances out of Harley-Davidson's control.

6. Which has been in an accident or collision or has been dropped or struck.

Other Limitations

This limited warranty does not cover:

1. Parts and labor for normal maintenance as recommended in the owner's manual, or the replacement of parts due to normal wear and tear including, but not limited to, the following: tires, lubrication, oil and filter change, fuel system cleaning, battery maintenance, engine tune-up, spark plugs, brake, clutch, chain/belt adjustment and chain replacement.

2. Cosmetic concerns that arise as a result of owner abuse, lack of proper maintenance or environmental conditions (except concerns that result from defects in factory materials or workmanship, which are covered by this limited warranty for the duration of the limited warranty period).

3. Any cosmetic condition existing at the time of retail delivery that has not been documented by the authorized Harley-Davidson selling dealer prior to retail delivery.

4. Defects or damage to the motorcycle caused by alterations outside of Harley-Davidson's factory specifications or caused by alterations or use of parts or accessories not approved for the make and model year of your motorcycle.

5. Damage caused by installation or use of non-Harley-Davidson components, even those installed by an authorized Harley-Davidson dealership, that cause a Harley-Davidson part to fail. Examples include, but are not limited to performance-enhancing powertrain components or software, exhaust systems, trailer hitches, non-approved tires, lowering kits, handlebars, and add-ons connected to the factory electrical system.

Important: Read Carefully

---

1. Authorized Harley-Davidson dealers are independently owned and operated and may sell non-Harley-Davidson products. Because of this, HARLEY-DAVIDSON IS NOT RESPONSIBLE FOR THE SAFETY, QUALITY, OR SUITABILITY OF ANY NON-HARLEY-DAVIDSON PART, ACCESSORY OR DESIGN MODIFICATION INCLUDING, BUT NOT LIMITED TO, LABOR WHICH MAY BE SOLD AND/OR INSTALLED BY AUTHORIZED HARLEY-DAVIDSON DEALERS.

2. This limited warranty is a contract between you and Harley-Davidson. It is separate and apart from any warranty you may receive or purchase from an authorized Harley-Davidson dealer. An authorized Harley-Davidson dealer is not authorized to alter, modify, expand, or

in any way change the terms and conditions of this limited warranty.

3. Any warranty work or parts replacement authorized by Harley-Davidson will not preclude Harley-Davidson from later relying on any exclusion where applicable.

4. Harley-Davidson and its authorized dealers reserve the right to modify or service motorcycles designed and manufactured by Harley-Davidson at any time without incurring any additional obligation to make the same alteration or change to a motorcycle previously built and sold. Harley-Davidson reserves the right to provide post-warranty repairs, conduct repair campaigns, offer good-will or customer satisfaction repairs or extend the warranty coverage for certain motorcycles at its sole discretion. Said repairs or extensions of warranty coverage in no way obligates Harley-Davidson to provide similar accommodations to other owners of similar motorcycles. Sometimes Harley-Davidson may offer a special adjustment program to pay all or part of the cost of certain repairs beyond the terms of your limited warranty. Check with your authorized Harley-Davidson dealer to learn whether such programs are available to you. Your state may prohibit these types of offers, in which case, they may not be available to you.

5. The fact that a part is labeled or branded Harley-Davidson does not necessarily make it appropriate or warranted for the make and model of your motorcycle. The use of parts not designed and tested for your motorcycle may have negative consequences on the performance of your motorcycle and may create conditions not covered by this limited warranty.

2016 Australia/New Zealand Harley-Davidson Motorcycle Manufacturer's Limited Warranty

---

24 Months/Unlimited Miles

This motorcycle limited warranty, referred to below as the "H-D Motorcycle Warranty" applies to all persons who purchase a new 2016 or prior-model Harley-Davidson motorcycle in Australia and New Zealand only after 1st January 2016.

Your Consumer Rights

The benefits given to you under this H-D Motorcycle Warranty are additional to, and do not detract from, other rights and remedies that you may have in respect of the motorcycle under Australian and New Zealand laws, including consumer protection laws.

In Australia, our goods come with guarantees that cannot be excluded under the Australian Consumer Law. You are entitled to a replacement or refund for a major failure and compensation for any other reasonably foreseeable loss or damage. You are also entitled to have the goods repaired or replaced if the goods fail to be of acceptable quality and the failure does not amount to a major failure.

In New Zealand, our goods also come with guarantees that cannot be excluded under the New Zealand Consumer Guarantees Act.

Warranty

This H-D Motorcycle Warranty, is provided by **Harley-Davidson, Motor Company**, P.O. Box 653,

Milwaukee, Wisconsin 53201, U.S.A, phone: +1 (414) 343-4056, ("Harley-Davidson").

Harley-Davidson warrants for any new 2016 Harley-Davidson motorcycle that an authorised Harley-Davidson dealer will repair or replace without charge any parts found to be defective in factory materials or workmanship under normal use during the warranty period set out below.

Such repair or replacement of parts will be Harley-Davidson's sole obligation and your sole remedy under this H-D Motorcycle Warranty, however you may have other rights under Australian and New Zealand laws, as described above.

Note: Goods presented for repair may be replaced by refurbished goods of the same type rather than being repaired. Refurbished parts may be used to repair goods.

The following terms and conditions apply to this H-D Motorcycle Warranty:

Warranty Period

The duration of this H-D Motorcycle Warranty is twenty-four months, starting from the earlier of:

(a) the date of delivery by an authorised Harley-Davidson dealer to the first retail purchaser; or

(b) the third anniversary of the last day of the model year of the motorcycle (if not sold to a retail purchaser before that date).

Your authorised Harley-Davidson dealer will submit an electronic Sales and Warranty Registration form to initiate your H-D Motorcycle Warranty.

Note: If the motorcycle was used as a demonstrator or company motorcycle, then the warranty period may have started and/or expired prior to the initial retail sale. See an authorised Harley-Davidson dealer for details.

Any unexpired portion of this H-D Motorcycle Warranty will be transferred to subsequent owners, upon the resale of the motorcycle during the warranty period. See the OWNER CONTACT INFORMATION section of the Owner's Manual for information regarding notification of ownership changes.

Obtaining Warranty Service

To obtain warranty service, return your motorcycle at your expense within the warranty period to an authorised dealer. Harley-Davidson's network of authorised dealers is large, and continues to expand. To find current contact information for your nearest authorised dealer, visit our website at www.h-d.com.au.

The authorised Harley-Davidson dealer should be able to provide warranty service during normal business hours and as soon as possible, depending upon the workload of the authorised dealer's service department and the availability of necessary parts

You are responsible for collecting the motorcycle from the authorized dealer once the warranty service has been completed, at your expense.

Exclusions

This H-D Motorcycle Warranty will not apply to any motorcycle (or part or accessory):

1. Which has not been operated or maintained as specified in the Owner's Manual.

2. Which has been abused, neglected, misused, improperly stored, used "off the highway," or used for racing or competition of any kind.

3. Which was not originally manufactured for use or sold in Australia and New Zealand and/or does not comply with Australian and New Zealand homologation requirements.

4. Which has off-road or competition parts installed to enhance performance, or has unapproved modifications. These modifications may void all or part of your new H-D Motorcycle Warranty. See an authorised Harley-Davidson dealer for details.

5. Where damage is caused by, or Harley-Davidson is unable to honour this H-D Motorcycle Warranty due to, acts of God, war, riot, insurrection, natural disasters, including, but not limited to, nuclear contamination, lightning, forest fires, dust storms, hail storms, ice storms, earthquakes, floods, or other circumstances out of Harley-Davidson's control.

6. Which has been in an accident, collision, dropped or struck.

Note: Even though this H-D Motorcycle Warranty does not apply in the circumstances set out above, you may still have rights under Australian and New Zealand laws, including the Australian Consumer Law in such circumstances.

Other Limitations

This H-D Motorcycle Warranty does not cover:

1. Parts and accessories not manufactured by Harley-Davidson, or any damage caused to the motorcycle by the installation of such parts and accessories, even if such parts and accessories are installed on the motorcycle at the date of initial retail purchase. A separate third party warranty may apply to such parts and accessories. See an authorised Harley-Davidson dealer for details.

2. Parts and labour for normal maintenance as recommended in the Owner's Manual, or the replacement of parts due to normal wear and tear including, but not limited to, the following: tyres, lubrication, oil and filter change, fuel system cleaning, battery maintenance, engine tune-up, spark plugs, brake, clutch, chain/belt adjustment and chain replacement.

3. Cosmetic or other concerns that arise as a result of owner abuse, lack of proper maintenance or environmental conditions (except concerns that result from defects in factory materials or workmanship, which are covered by this H-D Motorcycle Warranty for the duration of the warranty period).

4. Any cosmetic condition existing at the time of retail delivery that has not been documented by the authorised Harley-Davidson selling dealer prior to retail delivery.

5. Defects or damage to the motorcycle caused by alterations outside of Harley-Davidson's factory specifications, including the installation of competition or closed course parts and accessories and the addition of loads and stresses to the motorcycle above those recommended by Harley-Davidson.

6. Damage caused by installation or use of non-Harley-Davidson components, even those installed by an authorised dealership, that cause a Harley-Davidson part to fail. Examples include, but are not limited to performance-enhancing powertrain components or software, exhaust systems, non-approved tyres, lowering kits, handlebars, add-ons connected to the

factory electrical system, tow bars, etc.

Note: Even though this H-D Motorcycle Warranty does not cover the circumstances set out above, you may still have rights under Australian and New Zealand laws, including the Australian Consumer Law.

Important: Read Carefully

---

1. Authorised Harley-Davidson dealers are independently owned and operated and may sell non-Harley-Davidson products. Because of this, HARLEY-DAVIDSON IS NOT RESPONSIBLE FOR THE SAFETY, QUALITY, OR SUITABILITY OF ANY NON-HARLEY-DAVIDSON PART, ACCESSORY OR DESIGN MODIFICATION WHICH MAY BE SOLD AND/OR INSTALLED BY AUTHORISED HARLEY-DAVIDSON DEALERS OR LABOUR CARRIED OUT BY DEALERS.

2. This H-D Motorcycle Warranty is a contract between you and Harley-Davidson. It is separate and apart from any warranty you may receive or purchase from an authorised Harley-Davidson dealer. An authorised Harley-Davidson dealer is not authorised to alter, modify, or in any way change the terms and conditions of this H-D Motorcycle Warranty.

Any warranty work or parts replacement authorised by Harley-Davidson will not preclude Harley-Davidson from later relying on any exclusion where Harley-Davidson later becomes aware that an exclusion applied or the warranty claim did not otherwise comply with the terms of this H-D Motorcycle Warranty.

2016 Harley-Davidson Motorcycle Noise Control System Limited Warranty

---

The following limited warranty applies to the noise control system, is in addition to the MOTORCYCLE LIMITED WARRANTY and EMISSION CONTROL SYSTEM LIMITED WARRANTY, and applies only to Harley-Davidson motorcycles sold in the U.S.

Harley-Davidson warrants to the first owner and each subsequent owner that this motorcycle is designed and built so as to conform at the time of sale with applicable regulations of the U.S. Environmental Protection Agency (as tested following F-76 Drive-By test procedure) and that it is free from defects in factory materials and workmanship which can cause this motorcycle not to meet U.S. Environmental Protection Agency Standards within one (1) year from initial retail purchase and delivery from an authorized Harley-Davidson dealer or one (1) year from the [second] anniversary of the last day of the model year of the motorcycle, or 3,730 miles 6,000 kilometers whichever occurs first. Any unexpired portion of this limited warranty will be transferred to subsequent owners, upon the resale of the motorcycle during the limited warranty period. If the motorcycle was used as a demonstrator or company motorcycle, then the limited warranty period may have started and/or expired prior to the initial retail sale. See an authorized Harley-Davidson dealer for details.

THERE IS NO OTHER EXPRESS WARRANTY (OTHER THAN THE SEPARATE MOTORCYCLE AND EMISSIONS LIMITED WARRANTIES) ON THE MOTORCYCLE. ANY IMPLIED WARRANTY OF MERCHANTABILITY OR FITNESS FOR PARTICULAR PURPOSE IS LIMITED TO THE DURATION OF THIS LIMITED WARRANTY.

Some states do not allow limitations on how long an implied warranty lasts, so the above limitation may not apply to you.

The limited warranty period shall begin on the date the motorcycle is delivered to the first retail purchaser or, if the motorcycle is placed in service as a demonstrator or company motorcycle

prior to sale at retail, on the date it is first placed in service.

THE FOLLOWING ITEMS ARE NOT COVERED BY THE NOISE CONTROL SYSTEM LIMITED WARRANTY

1. Failures which arise as a result of misuse, alteration, or non-performance of maintenance as specified in the Owner's Manual.
2. Replacing, removing, or modifying any portion of the NOISE CONTROL SYSTEM (consisting of the exhaust system and air intake/cleaner assembly) with parts not certified to be noise legal for street use.
3. Any motorcycle on which the odometer mileage has been changed so that the mileage cannot be determined.
4. TO THE FULLEST EXTENT ALLOWED BY LAW, NEITHER HARLEY-DAVIDSON NOR ITS AUTHORIZED DEALERS SHALL BE LIABLE FOR LOSS OF TIME, INCONVENIENCE, LOSS OF MOTORCYCLE USE, COMMERCIAL LOSS OR OTHER INCIDENTAL OR CONSEQUENTIAL DAMAGES.

Some states do not allow the exclusion or limitation of incidental or consequential damages, so the above limitation or exclusion may not apply to you.

Other Rights

This limited warranty gives you specific legal rights, and you may have other rights which vary from state to state.

Recommendations for Required Maintenance

It is recommended that any noise system maintenance be performed by an authorized Harley-Davidson dealer using genuine Harley-Davidson replacement parts. The maintenance, replacement or repair of the noise control system may be performed by any other qualified service outlet or individual. Non-genuine Harley-Davidson parts may be used only if such parts are certified to comply with U.S. Environmental Protection Agency Standards.

2016 Harley-Davidson Emission Control System Limited Warranty

The following limited warranty applies to the emission control system, is in addition to the MOTORCYCLE LIMITED WARRANTY and NOISE CONTROL SYSTEM LIMITED WARRANTY, and applies only to Harley-Davidson motorcycles certified for sale, registered, and normally operated in the U.S. Refer to the CALIFORNIA EMISSIONS CONTROL WARRANTY STATEMENT for additional warranty provisions applicable to California motorcycles.

Harley-Davidson Motor Company warrants to the first owner and each subsequent owner that this vehicle is designed, built, and equipped so as to conform at the time of sale with applicable regulations under section 7521 of Title 42 of the United States Code, and that it is free from defects in materials and workmanship which would cause this motorcycle to fail to conform with applicable regulations for five (5) years from the initial retail purchase and delivery from an authorized Harley-Davidson dealer (or five (5) years from the date the motorcycle is first placed in service, if it is first placed in service as a "demonstrator" or "company" motorcycle prior to delivery), or 18,641 miles 30,000 kilometers , whichever occurs first. Any unexpired portion of this limited warranty will be transferred to subsequent owners, upon the resale of the motorcycle

during the warranty period.

THERE IS NO OTHER EXPRESS WARRANTY (OTHER THAN THE SEPARATE MOTORCYCLE AND NOISE LIMITED WARRANTIES) ON THE MOTORCYCLE. ANY IMPLIED WARRANTY OF MERCHANTABILITY OR FITNESS FOR PARTICULAR PURPOSE IS LIMITED TO THE DURATION OF THIS WARRANTY.

Some states do not allow limitations on how long an implied warranty lasts, so the above limitation may not apply to you.

The limited warranty period shall begin on the date the motorcycle is delivered to the first retail purchaser or, if the motorcycle is placed in service as a demonstrator or company motorcycle prior to sale at retail, on the date it is first placed in service.

THE FOLLOWING ITEMS ARE NOT COVERED BY THE EMISSION CONTROL SYSTEM LIMITED WARRANTY

1. Failures which arise as a result of misuse, tampering, alterations, accident, acts of nature, or improper or inadequate maintenance as specified in the Owner's Manual.

2. Required maintenance services (as specified in the Owner's Manual) and the replacement of parts (such as spark plugs, fuel and oil filters, etc.) used in required maintenance.

3. Any motorcycle on which the odometer mileage has been changed so that the mileage cannot be determined.

4. TO THE FULLEST EXTENT ALLOWED BY LAW, NEITHER HARLEY-DAVIDSON NOR ITS AUTHORIZED DEALERS SHALL BE LIABLE FOR LOSS OF TIME, INCONVENIENCE, TOWING OF THE VEHICLE, LOSS OF MOTORCYCLE USE, COMMERCIAL LOSS OR OTHER INCIDENTAL OR CONSEQUENTIAL DAMAGES.

Some states do not allow the exclusion or limitation of incidental or consequential damages, so the above limitation or exclusion may not apply to you.

Items Covered by this Emission Warranty

The emission control system warranty may cover the following parts if the defect is deemed to be emissions-related:

- Air cleaner assembly
- Cam shaft
- Spark plug
- Ignition coil
- Ignition wires
- Vapor valve
- Catalytic converter
- Crankcase breather
- MAP sensor
- TMAP sensor
- Intake air temperature sensor
- Throttle position sensor
- Fuel injectors
- Induction module or throttle body
- Engine temperature sensor
- Electronic control unit

- Regulator/fuel pump (for leaks and/or high and low-pressure failures)
- Fuel filter
- Oxygen sensors

Fuel Tank (non-cosmetic failures only)

- Leaks
- Fuel vapor separator
- Fuel cap

If used on the above: hoses, clamps, fittings, tubing, sealing gaskets and mounting hardware.

Detailed instructions for proper maintenance and use of this motorcycle, including the time and/or mileage intervals at which such maintenance is to be performed, may be found in this Owner's Manual under Service Records.

Other Rights

This limited warranty gives you specific legal rights, and you may have other rights which vary from state to state.

Recommendations for Required Maintenance

It is recommended that any emission system maintenance be performed by an authorized Harley-Davidson dealer using genuine Harley-Davidson replacement parts. However the maintenance, replacement or repair of the emissions control system may be performed by any other qualified service outlet or individual. Non-genuine Harley-Davidson parts may be used only if such parts are certified to comply with U.S. Environmental Protection Agency Standards.

California Emissions Control Warranty Statement

Your Warranty Rights and Obligations

The California Air Resources Board and Harley-Davidson Motor Company are pleased to explain the emission control system warranty on your 2016 model year motorcycle. In California, new motor vehicles must be designed, built and equipped to meet the State's stringent anti-smog standards. Harley-Davidson Motor Company must warrant the emission control system on your motorcycle for the periods of time listed below provided there has been no abuse, unapproved modification, neglect or improper maintenance of your motorcycle.

Your emission control system may include parts such as the carburetor or fuel-injection system, the ignition system, catalytic converter, and engine computer. Also included may be hoses, connectors and other emission-related assemblies.

Where a warrantable condition exists, within the warranty period noted below, your authorized Harley-Davidson dealer will repair your motorcycle at no cost to you including diagnosis, parts and labor.

Manufacturer's Warranty Coverage

For a period of use of five years or 18,641 miles 30,000 kilometers , whichever first occurs, beginning on the date the motorcycle is delivered to the ultimate purchaser or, if the motorcycle is placed in service as a demonstrator or company motorcycle prior to sale at retail, the date it is first placed in service.

If any emission related part on your motorcycle is defective, the part will be repaired or replaced by Harley-Davidson Motor Company. This is your emission control system DEFECTS WARRANTY.

Owner's Warranty Responsibilities

As the motorcycle owner, you are responsible for the performance of the required maintenance listed in your Owner's Manual. Harley-Davidson recommends that you retain all receipts covering maintenance on your motorcycle, but Harley-Davidson cannot deny emissions warranty coverage solely for the lack of receipts or for your failure to ensure the performance of all scheduled maintenance.

You are responsible for presenting your motorcycle to an authorized Harley-Davidson dealer as soon as a problem exists. The warranty repairs should be completed in a reasonable amount of time, not to exceed 30 days.

As the motorcycle owner, you should also be aware that Harley-Davidson may deny you warranty coverage if your motorcycle or a part has failed due to abuse, neglect, improper maintenance or unapproved modifications.

If you have any questions regarding your warranty rights and responsibilities, you should contact Harley-Davidson Customer Service Department at 1-800-258-2464 (U.S. only) or 1-414-343-4056, or the California Air Resources Board at 9528 Telstar Ave., El Monte, California 91731.

Additional Warranty Terms

The warranty period starts the date the motorcycle is delivered to the ultimate purchaser or, if the motorcycle is placed in service as a demonstrator or company motorcycle prior to sale at retail, the date it is first placed in service.

The emission control system of each new Harley-Davidson motorcycle was designed, built and tested using only Genuine Harley-Davidson parts and with these parts the motorcycle is certified as being in conformity with California emission control regulations.

We recommend that you take your motorcycle to an authorized Harley-Davidson dealer for repairs under this warranty. The dealer has factory-trained mechanics and genuine Harley-Davidson parts. However, in the case of an "emergency" (as defined below), you could have repairs performed at any available service establishment or by the owner, using any replacement part. An authorized Harley-Davidson dealer not being reasonably available, or a part not being available within a reasonable time period (not to exceed 30 days from the time the motorcycle is initially presented to a Harley-Davidson dealer for repair) constitutes an emergency. Harley-Davidson will reimburse the owner for such repairs, including diagnosis, only if it is established that the repairs are covered under this emission warranty. Harley-Davidson's parts reimbursement, however, will not exceed our suggested retail price for all warranted parts replaced and our labor reimbursement will be limited to our recommended time allowances for emission system repairs at the geographically appropriate hourly labor rate.

To obtain reimbursement from Harley-Davidson for such emergency repairs, you must keep all

failed parts and original receipts, so you can present them to an authorized Harley-Davidson dealer for inspection. Harley-Davidson recommends that you bring your motorcycle to an authorized dealer for inspection to ensure that the emergency repairs were done properly.

Remember: Use of non-Harley-Davidson replacement parts may impair the effectiveness of the emission control system or otherwise damage your motorcycle. If other than genuine Harley-Davidson parts are used for maintenance, replacement or repair of components affecting emission control, you should obtain written assurances that such non-Harley-Davidson parts are warranted by their manufacturer to be equal in quality to Genuine Harley-Davidson parts in both performance and durability. The use of non-Harley-Davidson replacement parts does not invalidate the existing warranty, if any, on other Harley-Davidson components unless the non-Harley-Davidson parts cause damage to warranted parts or result in the creation of an emissions non-compliant motorcycle. However, HARLEY-DAVIDSON ASSUMES NO LIABILITY UNDER THIS WARRANTY WITH RESPECT TO ANY PARTS WHICH ARE NOT GENUINE HARLEY-DAVIDSON PARTS, unless Harley-Davidson parts cause damage to non-genuine Harley-Davidson parts.

What Is Covered by this Emission Warranty

The emission control system warranty covers the following "warranted parts" only:

- Air cleaner assembly
- Cam shaft
- Spark plug
- Ignition coil
- Ignition wires
- Vapor valve
- Catalytic converter
- Crankcase breather
- MAP sensor
- TMAP sensor
- Intake air temperature sensor
- Throttle position sensor
- Fuel injectors
- Induction module or throttle body
- Engine temperature sensor
- Electronic control unit
- Regulator/fuel pump (for leaks and/or high and low pressure failures)
- Fuel filter
- Oxygen sensors
- Carbon canister
- Purge control valve

Fuel Tank (non-cosmetic failures only)

- Leaks
- Fuel vapor separator
- Fuel cap

If used on the above: hoses, clamps, fittings, tubing, sealing gaskets and mounting hardware.

What Is Not Covered by this Emission Warranty

The emission control system warranty does not cover:

Malfunctions in any "warranted parts" caused by any of the following: abuse, misuse, unapproved modification or alteration, tampering, disconnection, or improper or inadequate maintenance. The warranty also does not cover replacement of listed parts in the event that the vehicle has been rendered emissions non-compliant in the state of California through actions noted above.

Damage resulting from accident, acts of nature or other events beyond the control of Harley-Davidson.

The repair or replacement of "warranted parts" which are scheduled for replacement prior to 18,641 mi 30,000 km , once these parts have been replaced at the first replacement interval as part of required maintenance services.

Repairs and services performed by anyone other than an authorized Harley-Davidson Dealer (except in case of emergency as defined above).

Loss of time, inconvenience, loss of use of the motorcycle, towing of the vehicle, or commercial loss and/or consequential damages.

Repairs on any motorcycle of which odometer mileage has been changed so that mileage cannot be readily determined.

Service Intervals and Records

Service Records

Regular Service Intervals

Service must be performed at specified intervals to keep your Harley-Davidson motorcycle operating at peak performance. Refer to Regular Service Intervals: 2016 Harley-Davidson Street Models.

NOTES:

- *The use of parts and service procedures other than Harley-Davidson approved parts and service procedures may void the limited warranty. Any alterations to the emission system components, such as the intake and exhaust system, may be in violation of motor vehicle laws.*
- *Some countries, such as Brazil, may require all regular maintenance to be performed by an authorized Harley-Davidson dealer for your limited warranty to remain in effect. Check with your authorized Harley-Davidson dealer.*
- *Some countries, such as Brazil, may require additional annual (or semi-annual) regular maintenance steps to be performed to keep your limited warranty in effect and/or comply with vehicle regulations. Check with your authorized Harley-Davidson dealer as well as the motorcycle regulations in your country.*
- *After completing the final service interval, repeat the service schedule starting at the 5000 mi 8000 km interval.*
- *Whenever a vehicle is in for maintenance, always check for and complete recalls and open product programs.*
- *Whenever a vehicle is in for maintenance, always verify that the latest calibration is installed.*

Regular Service Intervals: 2016 Harley-Davidson Street Models

ITEM SERVICED	1000 mi 1600 km	5000 mi 8000 km	10000 mi 16000 km	15000 mi 24000 km	20000 mi 32000 km	25000 mi 40000 km	30000 mi 48000 km	35000 mi 56000 km	40000 mi 64000 km	45000 mi 72000 km	50000 mi 80000 km	NOTES
Replace engine oil and filter	X	X	X	X	X	X	X	X	X	X	X	1
Check front tire pressure, inspect tread	X	X	X	X	X	X	X	X	X	X	X	1
Check front brake pads and discs for wear	X	X	X	X	X	X	X	X	X	X	X	
Inspect and lubricate front brake caliper pins and bushings	X	X	X	X	X	X	X	X	X	X	X	2
Check front brake system for leaks, contact or abrasion	X	X	X	X	X	X	X	X	X	X	X	1
Repair front brake system as necessary	X	X	X	X	X	X	X	X	X	X	X	2
Check front brake fluid level in sight glass	X	X	X	X	X	X	X	X	X	X	X	
Flush brake system and replace DOT 4 hydraulic brake fluid every two years												2
Check and adjust throttle cables	X	X	X	X	X	X	X	X	X	X	X	2
Lubricate throttle	X	X	X	X	X	X	X	X	X	X	X	2

cables												
Check and adjust brake and clutch controls	X	X	X	X	X	X	X	X	X	X	X	2
Lubricate brake and clutch controls	X	X	X	X	X	X	X	X	X	X	X	2
Rebuild front forks and replace fork oil											X	2
Adjust steering head bearings	X				X				X			2
Lubricate steering head bearings					X				X			2
Clean radiator	X	X	X	X	X	X	X	X	X	X	X	
Check cooling system for leaks and check clamps for tightness	X	X	X	X	X	X	X	X	X	X	X	
Check coolant level	X	X	X	X	X	X	X	X	X	X	X	
Check coolant freeze point	X	X	X	X	X	X	X	X	X	X	X	2
Replace coolant every 48,000 km (30,000 mi)												2
Check fuel lines and fittings for leaks, contact or abrasion	X	X	X	X	X	X	X	X	X	X	X	1
Repair fuel lines and	X	X	X	X	X	X	X	X	X	X	X	2

fittings as necessary												
Check and lubricate jiffy stand	X	X	X	X	X	X	X	X	X	X	X	2, 3
Clean and lubricate shift and brake levers, inspect for wear					X				X			2
Inspect rear fork bearing					X				X			2
Inspect drive belt and sprockets, adjust belt	X	X	X	X	X	X	X	X	X	X	X	2
Check rear tire pressure, inspect tread	X	X	X	X	X	X	X	X	X	X	X	1
Inspect rear shock absorber bushings for wear and cracks					X				X			2
Check rear brake pads and disc for wear	X	X	X	X	X	X	X	X	X	X	X	1
Check rear brake system for leaks, contact or abrasion	X	X	X	X	X	X	X	X	X	X	X	1
Rear brake system repair as necessary	X	X	X	X	X	X	X	X	X	X	X	2
Inspect rear brake caliper and lubricate pins and bushings	X	X	X	X	X	X	X	X	X	X	X	2
Check rear	X	X	X	X	X	X	X	X	X	X	X	

brake fluid level in reservoir												
Check exhaust system for leaks, cracks and loose or missing fasteners or exhaust shields	X	X	X	X	X	X	X	X	X	X	X	1, 3
Repair exhaust system as necessary	X	X	X	X	X	X	X	X	X	X	X	2
Inspect air cleaner filter, service as required	X	X	X	X	X	X	X	X	X	X	X	3
Lubricate fuel cap lock	X	X	X	X	X	X	X	X	X	X	X	3
Inspect valve lash, adjust if necessary				X			X			X		2, 4
Check battery, terminal torque and clean connections annually.												1
Replace spark plugs every two years or every 48,000 km (30,000 mi), whichever comes first.												
Check operation of electrical equipment and switches	X	X	X	X	X	X	X	X	X	X	X	

Road test to verify component and system functions	X	X	X	X	X	X	X	X	X	X	X	
NOTES:	1. Perform annually or at specified intervals, whichever comes first. 2. Should be performed by an authorized Harley-Davidson dealer, unless you have the proper tools, service data and are mechanically qualified. 3. Perform maintenance more frequently in severe riding conditions (such as extreme temperatures, dusty environments, mountainous or rough roads, long storage conditions, short runs, heavy stop/go traffic or poor fuel quality). 4. Could vary with frequency of operation and riding style.											

Maintenance Records

Maintain a record of this service to keep your new motorcycle limited warranty in force. Refer to Owner's Maintenance Records.

Owner's Maintenance Records

SERVICE MILE INTERVAL	DATE	DEALER NUMBER	TECHNICIAN NAME	TECHNICIAN SIGNATURE
1,000 mi 1,600 km				
5,000 mi 8,000 km				
10,000 mi 16,000 km				
15,000 mi 24,000 km				
20,000 mi 32,000 km				
25,000 mi 40,000 km				
30,000 mi 48,000 km				
35,000 mi 56,000 km				
40,000 mi 64,000 km				
45,000 mi 72,000 km				
50,000 mi 80,000 km				

Service Literature

Visit any Harley-Davidson dealer to purchase a service or parts manual for your motorcycle. Factory authorized manuals are the most complete and detailed source of information outside of your Harley-Davidson dealer. Refer to Service Literature: 2016 Street Models.

Service Literature: 2016 Street Models

DOCUMENT	PART NUMBER
Street Models Service Manual	99611-16
Street Models Electrical Diagnostic Manual	99612-16
Street Models Parts Catalog	99610-16
Publication numbers listed are English language manuals. Other languages are available from a Harley-Davidson dealer.	

Glossary

Acronyms and Measurement Symbols

Acronyms and Measurement Symbols (A-C)

ITEM	DEFINITION
A	Amperes
ABS	Anti-lock braking system
AC	Alternating current
AGM	Absorbed glass mat (battery)
Ah	Ampere-hour
BAS	Bank angle sensor
BCM	Body control module
°C	Celsius (Centigrade)
CCA	Cold cranking amps
cm	Centimeters
cm^3	Cubic centimeters (cc)
CVO	Custom vehicle operations

Acronyms and Measurement Symbols (D-F)

ITEM	DEFINITION
DC	Direct current
DLC	Data link connector
DOM	Domestic
DTC	Diagnostic trouble code
ECM	Electronic control module
EHCU	Electro hydraulic control unit

ETC	Electronic throttle control
EVAP	Evaporative emissions control system
°F	Fahrenheit
fl oz	Fluid ounce
ft	Feet
ft-lbs	Foot pounds
FTP	Flash to pass

Acronyms and Measurement Symbol (G-Z)

ITEM	DEFINITION
g	Gram
gal	Gallon
GAWR	Gross axle weight rating
GND	Ground (electrical)
GPS	Global positioning system
GVWR	Gross vehicle weight rating
H-DSSS	Harley-Davidson Smart Security System
HCU	Hydraulic control unit
HDI	Harley-Davidson International
IGN	Ignition light/key switch position
in	inch
in^3	Cubic inch
in-lbs	Inch pounds
kg	Kilogram
km	Kilometer
km/h	Kilometers per hour
kPa	Kilopascal
kW	Kilowatt
L	Liter
lb	Pounds
LED	Light emitting diode
mA	Milliampere
mi	Mile
mL	Milliliter
mm	Millimeter
mph	Miles per hour
ms	Millisecond
Nm	Newton-meter
oz	Ounce
P&A	Parts and Accessories
PA	Public address

PA	Public address
Part No.	Part number
PIN	Personal identification number
psi	Pounds per square inch
qt	Quart
rpm	Revolutions per minute
TPMS	Tire pressure monitoring system
USB	Universal serial bus
V	Volt
VAC	Volts of alternating current
VDC	Volts of direct current
VIN	Vehicle identification number
VR	Voice recognition
W	Watt

H-D U.S.A., LLC Trademark Information

Bar & Shield, Boom!, Cross Bones, Cruise Drive, CVO, Digital Tech, Digital Technician, Digital Technician II, Dyna, Electra Glide, Evolution, Fat Bob, Fat Boy, Forty-Eight, Glaze, Gloss, H-D, H-Dnet.com, Harley, Harley-Davidson, HD, Heritage Softail, Iron 883, Low Rider, Night Rod, Nightster, Night Train, Profile, Reflex, Revolution, Road Glide, Road King, Road Tech, Rocker, Screamin' Eagle, Seventy-Two, Softail, Sportster, Street Glide, Street Rod, Sun Ray, Sunwash, Super Glide, SuperLow, Supersmart, Switchback, SYN3, TechLink, TechLink II, Tour-Pak, Tri Glide, Twin Cam 88, Twin Cam 88B, Twin Cam 96, Twin Cam 96B, Twin Cam 103, Twin Cam 103B, Twin Cam 110, Twin Cam 110B, Twin-Cooled, Ultra Classic, V-Rod, VRSC and Harley-Davidson Genuine Motor Parts and Genuine Motor Accessories are among the trademarks of H-D U.S.A., LLC.

Product Registered Marks

Apple, Alcantara S.p.A., Allen, Amp Multilock, Bluetooth, Brembo, City Navigator, Delphi, Deutsch, Dunlop, Dynojet, Fluke, G.E. Versilube, Garmin, Gunk, Hydroseal, Hylomar, iPhone, iPod, Kevlar, Lexan, Loctite, Lubriplate, Keps, K&N, Magnaflux, Marson Thread-Setter Tool Kit, MAXI fuse, Molex, Michelin, MPZ, Mulitilock, nano, NGK, Novus, Packard, Pirelli, Permatex, Philips, PJ1, Pozidriv, Road Tech, Robinair, S100, Sems, SiriusXM, Snap-on, Teflon, Threadlocker, Torca, Torco, TORX, Tufoil, Tyco, Ultratorch, Velcro, X-Acto, XM Satellite Radio, and zumo are among the trademarks of their respective owners.