Safety First

Safe Operating Rules: Sportster Models

⚠WARNING

Motorcycles are different from other vehicles. They operate, steer, handle and brake differently. Unskilled or improper use could result in loss of control, death or serious injury. (00556c)

- Take a rider training course.
- Read Owner's Manual before riding, adding accessories or servicing.
- Wear a helmet, eye protection and protective clothing.
- Never tow a trailer.

Before operating your new motorcycle it is your responsibility to read and follow the operating and maintenance instructions in this manual, and follow these basic rules for your personal safety.

- Know and respect the rules of the road (see RULES OF THE ROAD section). Carefully read and observe the rules contained in the RIDING TIPS booklet accompanying this Owner's Manual. Read and familiarize yourself with the contents of the MOTORCYCLE HANDBOOK for your state.
- Before starting engine, check for proper operation of brake, clutch, shifter, throttle controls, correct fuel and oil supply.

⚠WARNING

Do not use aftermarket parts and custom made front forks which can adversely affect performance and handling. Removing or altering factory installed parts can adversely affect performance and could result in death or serious injury. (00001a)

- Use only Harley-Davidson approved parts and accessories. Use of certain other manufacturer's performance parts will void your new motorcycle warranty. See your Harley-Davidson dealer for details.

⚠WARNING

Stop the engine when refueling or servicing the fuel system. Do not smoke or allow open flame or sparks near gasoline. Gasoline is extremely flammable and highly explosive, which could result in death or serious injury. (00002a)

When refueling your motorcycle, the following rules should be observed.

- Refuel in a well ventilated area with the engine turned off.
- Remove fuel filler cap slowly.
- Do not smoke or allow open flames or sparks when refueling or servicing the fuel system.
- Do not fill fuel tank above the bottom of the filler neck insert.
- Leave air space to allow for fuel expansion.

⚠WARNING

Do not store motorcycle with gasoline in tank within the home or garage where open flames, pilot lights, sparks or electric motors are present. Gasoline is extremely flammable and highly explosive, which could result in death or serious injury. (00003a)

⚠WARNING

Engine exhaust from this product contains chemicals known to the State of California to cause cancer, and birth defects or other reproductive harm. (00004f)

⚠WARNING

Do not run motorcycle in a closed garage or confined area. Inhaling motorcycle exhaust, which contains poisonous carbon monoxide gas, could result in death or serious injury. (00005a)

⚠WARNING

The jiffy stand locks when placed in the full forward (down) position with vehicle weight on it. If the jiffy stand is not in the full forward (down) position with vehicle weight on it, the vehicle can fall over which could result in death or serious injury. (00006a)

⚠WARNING

Be sure jiffy stand is fully retracted before riding. If jiffy stand is not fully retracted, it can contact the road surface causing a loss of vehicle control, which could result in death or serious injury. (00007a)

- A new motorcycle must be operated according to the special break-in procedure. See Break-in Riding Rules.
- Operate motorcycle only at moderate speed and out of traffic until you have become thoroughly familiar with its operation and handling characteristics under all conditions.

NOTE:

We recommend that you obtain information and formal training in the correct motorcycle riding technique. In the United States, the Motorcycle Safety Foundation® offers beginning and

advanced rider safety courses. Call (949)727-3227 for information.

⚠WARNING

Travel at speeds appropriate for road and conditions and never travel faster than posted speed limit. Excessive speed can cause loss of vehicle control, which could result in death or serious injury. (00008a)

- Do not exceed the legal speed limit or drive too fast for existing conditions. Always reduce speed when poor driving conditions exist. High speed increases the influence of any other condition affecting stability and increases the possibility of loss of control.
- Pay strict attention to road surfaces and wind conditions. Any two wheeled vehicle may be subject to upsetting forces such as wind blasts from passing trucks, holes in the pavement, rough road surfaces, rider control error, etc. These forces may influence the handling characteristics of your motorcycle. If this happens, reduce speed and guide the motorcycle with a relaxed grip to a controlled condition. Do not brake abruptly or force the handlebar. This may aggravate an unstable condition.
- Keep cargo weight concentrated close to the motorcycle and as low as possible to minimize the change in the motorcycle's center of gravity. Distribute weight evenly on both sides of the vehicle and do not load bulky items too far behind the rider or add weight to the handlebars or front forks. Do not exceed maximum specified load in each saddlebag.

NOTE:

New riders should gain experience under various conditions while driving at moderate speeds.

- Operate your motorcycle defensively. Remember, a motorcycle does not afford the same protection as an automobile in an accident. One of the most common accident situations occurs when the driver of the other vehicle fails to see or recognize a motorcycle and turns left into the on-coming motorcyclist. Operate only with headlamp on.
- Wear an approved helmet, clothing, and foot gear suited for motorcycle riding. Bright or light colors are best for greater visibility in traffic, especially at night. Avoid loose, flowing garments and scarves.

⚠WARNING

Avoid contact with exhaust system and wear protective clothing that completely covers legs while riding. Exhaust pipes and mufflers get very hot when engine is running and remain too hot to touch, even after engine is turned off. Failure to wear protective clothing could result in burns or other serious injury. (00009a)

- When carrying passengers, it is your responsibility to instruct them on proper riding procedures. (See Riding Tips for Motorcyclist included in your Harley-Davidson Owner's Kit.)

- Do not allow other individuals, under any circumstances, to operate your motorcycle unless you know they are experienced, licensed riders and are thoroughly familiar with the operation of your particular motorcycle.

- Protect your motorcycle against theft. After parking your motorcycle, lock the steering head and remove ignition key from switch. Set security alarm if present.
- Safe motorcycle operation requires alert mental judgment combined with a defensive driving

attitude. Do not allow fatigue, alcohol or drugs to endanger your safety or that of others.

- Vehicles equipped with a sound system should have the volume adjusted to a nondistracting level before operating vehicle.
- Maintain your motorcycle in proper operating condition in accordance with Regular Service Intervals: 2008 Sportster Models. Particularly important to motorcycle stability is proper tire inflation pressure, tread condition, and proper adjustment of wheel bearings and steering head bearings.

⚠WARNING

Do not operate vehicle with forks locked. Locking the forks restricts the vehicle's turning ability, which could result in death or serious injury. (00035a)

⚠WARNING

Perform the service and maintenance operations as indicated in the regular service interval table. Lack of regular maintenance at the recommended intervals can affect the safe operation of your motorcycle, which could result in death or serious injury. (00010a)

⚠WARNING

Do not operate motorcycle with loose, worn or damaged steering or suspension systems. Contact a Harley-Davidson dealer for repairs. Loose, worn or damaged steering or suspension components can adversely affect stability and handling, which could result in death or serious injury. (00011a)

⚠WARNING

Regularly inspect shock absorbers and front forks. Replace leaking, damaged or worn parts that can adversely affect stability and handling, which could result in death or serious injury. (00012a)

⚠WARNING

Use Harley-Davidson replacement fasteners. Aftermarket fasteners can adversely affect performance, which could result in death or serious injury. (00013a)

- See a Harley-Davidson service manual for proper torque values.
- Aftermarket fasteners may not have the specific property requirements to perform properly.

⚠WARNING

Be sure tires are properly inflated, balanced and have

adequate tread. Inspect your tires regularly and see a Harley-Davidson dealer for replacements. Riding with excessively worn, unbalanced or under-inflated tires can adversely affect stability and handling, which could result in death or serious injury. (00014a)

⚠WARNING

Replace punctured or damaged tires. In some cases, small punctures in the tread area may be repaired from within the demounted tire by a Harley-Davidson dealer. Speed should NOT exceed 50 mph (80 km/h) for the first 24 hours after repair, and the repaired tire should NEVER be used over 80 mph (130 km/h). Failure to follow this warning could result in death or serious injury. (00015a)

⚠WARNING

Do not exceed the motorcycle's Gross Vehicle Weight Rating (GVWR) or Gross Axle Weight Rating (GAWR). Exceeding these weight ratings can affect stability and handling, which could result in death or serious injury. (00016e)

- GVWR is the sum of the weight of the motorcycle, accessories, and the maximum weight of the rider, passenger and cargo that can be safely carried.
- GAWR is the maximum amount of weight that can be safely carried on each axle.
- The GVWR and GAWR are shown on the information plate which is located on the frame down tube.

⚠WARNING

Do not tow a disabled motorcycle. Towing can adversely affect stability and handling, which could result in death or serious injury. (00017a)

⚠WARNING

Do not pull a trailer with a motorcycle. Pulling a trailer can cause tire overload, reduced braking efficiency and adversely affect stability and handling, which could result in death or serious injury. (00018b)

⚠CAUTION

Direct contact of D.O.T. 4 brake fluid with eyes can cause irritation. Avoid eye contact. In case of eye contact flush with large amounts of water and get medical attention. Swallowing large amounts of D.O.T. 4 brake fluid can cause digestive discomfort. If swallowed, obtain medical attention. Use in well ventilated area. KEEP OUT OF

REACH OF CHILDREN. (00240a)

⚠WARNING

Batteries, battery posts, terminals and related accessories contain lead and lead compounds, and other chemicals known to the State of California to cause cancer, and birth defects or other reproductive harm. Wash hands after handling. (00019e)

⚠WARNING

Wheel weights on wheels without spokes contain lead and lead compounds, chemicals known to the State of California to cause cancer, and birth defects or other reproductive harm. (00356d)

⚠WARNING

Consult a Harley-Davidson dealer regarding any questions or problems that occur in the operation of your motorcycle. Failure to do so can aggravate an initial problem, cause costly repairs, cause an accident and could result in death or serious injury. (00020a)

- Be sure all equipment required by federal, state and local law is installed and in good operating condition.

Rules of the Road

- Keep to the right side of the road centerline when meeting other vehicles coming in the opposite direction. Ride to left of center of your lane to avoid oily pavement ahead.
- Always sound your horn, actuate your turn signals, and exercise caution when passing other vehicles going in the same direction. Never try to pass another vehicle going in the same direction at street intersections, on curves, or when going up or down a hill.
- At street intersections give the right-of-way to the vehicle on your right. Do not presume you have the right-of-way, as the other driver may not know it is your turn.
- Always signal when preparing to stop, turn or pass.
- All traffic signs, including those used for the control of traffic at intersections, should be obeyed promptly. SLOW DOWN signs near schools and CAUTION signs at railroad crossings should always be observed and your actions governed accordingly.
- When intending to turn to the left, signal at least 100 feet 30.5 meters before reaching the turning point. Move over to the centerline of the street (unless local rules require otherwise), slow down, enter the intersection of the street and then turn carefully to the left.
- Never anticipate a traffic light. When a change is indicated from GO to STOP (or vice versa) in the traffic control systems at intersections, slow down and wait for the light to change. Never run through a yellow or red traffic light.
- While turning either right or left, watch for pedestrians, animals, as well as vehicles.
- Do not leave the curb or parking area without signaling. Be sure your way is clear to enter moving traffic. A moving line of traffic always has the right-of-way.
- Be sure your license plate is installed in the position specified by law and is clearly visible at

all times. Keep the plate clean.
- Ride at a safe speed that is consistent with the type of highway you are on. Pay strict attention to whether the road is dry, oily, icy or wet.
- Watch for debris such as leaves or loose gravel.
- Weather and traffic conditions on the highway dictate adjusting your speed and driving habits accordingly.

Accessories and Cargo

Harley-Davidson Motor Company cannot test and make specific recommendations concerning every accessory or combination of accessories sold. Therefore, the rider must be responsible for safe operation of the motorcycle when installing accessories or carrying additional weight.

⚠WARNING

See the Accessory and Cargo section in your Owner's Manual. Improper loading of cargo or installation of accessories can affect motorcycle stability and handling, which could result in death or serious injury. (00021a)

⚠WARNING

Do not exceed the motorcycle's Gross Vehicle Weight Rating (GVWR) or Gross Axle Weight Rating (GAWR). Exceeding these weight ratings can affect stability and handling, which could result in death or serious injury. (00016e)

- GVWR is the sum of the weight of the motorcycle, accessories, and the maximum weight of the rider, passenger and cargo that can be safely carried.
- GAWR is the maximum amount of weight that can be safely carried on each axle.
- The GVWR and GAWR are shown on the information plate which is located on the frame down tube.

⚠WARNING

Do not pull a trailer with a motorcycle. Pulling a trailer can cause tire overload, reduced braking efficiency and adversely affect stability and handling, which could result in death or serious injury. (00018b)

Accessory and Cargo Guidelines

The following guidelines should be used when equipping a motorcycle, carrying passengers and/or cargo.

⚠WARNING

Travel at speeds appropriate for road and conditions and

never travel faster than posted speed limit. Excessive speed can cause loss of vehicle control, which could result in death or serious injury. (00008a)

- Do not exceed the legal speed limit or drive too fast for existing conditions. Always reduce speed when poor driving conditions exist. High speed increases the influence of any other condition affecting stability and increases the possibility of loss of control.
- Pay strict attention to road surfaces and wind conditions. Any two wheeled vehicle may be subject to upsetting forces such as wind blasts from passing trucks, holes in the pavement, rough road surfaces, rider control error, etc. These forces may influence the handling characteristics of your motorcycle. If this happens, reduce speed and guide the motorcycle with a relaxed grip to a controlled condition. Do not brake abruptly or force the handlebar. This may aggravate an unstable condition.
- Keep cargo weight concentrated close to the motorcycle and as low as possible. This minimizes the change in the motorcycle's center of gravity.
- Distribute weight evenly on both sides of the vehicle.
- Do not load bulky items too far behind the rider or add weight to the handlebars or front forks.
- Do not exceed maximum specified load in each saddlebag.
- Luggage racks are designed for lightweight items. Do not overload racks.
- Be sure cargo is secure and will not shift while riding and recheck the cargo periodically. Accessories that change the operator's riding position may increase reaction time and affect handling of the motorcycle.
- Additional electrical equipment may overload the motorcycle's electrical system possibly resulting in electrical system and/or component failure.

⚠WARNING

The front and/or rear guard(s) can provide limited leg and cosmetic vehicle protection under unique circumstances. (Fall over while stopped, very slow speed slide.) It is not made or intended to provide protection from bodily injury in a collision with another vehicle or any other object. (00022a)

Large surfaces such as fairings, windshields, back rests, and luggage racks can adversely affect handling. Only genuine Harley-Davidson items designed specifically for the motorcycle model should be used with proper installation.

⚠WARNING

Do not use aftermarket parts and custom made front forks which can adversely affect performance and handling. Removing or altering factory installed parts can adversely affect performance and could result in death or serious injury. (00001a)

⚠WARNING

Only Touring Harley-Davidson Motorcycles are suitable for sidecar use. Consult a Harley-Davidson dealer. Use of

motorcycles other than Touring models with sidecars could result in death or serious injury. (00040a)

Noise Control System

Tampering

Owners are warned that removal or replacement of any noise control system component may be prohibited by law. This prohibition applies prior to vehicle sale or delivery to the ultimate purchaser. Use of a vehicle on which noise control system components have been removed or rendered inoperative may also be prohibited by law.

Identification

Vehicle Identification Number (V.I.N.): Sportster Models

General

See V.I.N. Locations: Sportster Models. The full 17-digit V.I.N. is stamped on the steering head and printed on a label located on the right front frame down tube.

See Typical Harley-Davidson V.I.N.: 2008 Sportster Models. A unique 17-digit serial or Vehicle Identification Number (V.I.N.) is found on each motorcycle. For a description of each item in the V.I.N., refer to Harley-Davidson V.I.N. Breakdown: 2008 Sportster Models.

Abbreviated V.I.N.

An abbreviated V.I.N. is stamped on the left side of the crankcase between the front and rear cylinders.

Example: CV38111000

See Typical Harley-Davidson V.I.N.: 2008 Sportster Models for the complete V.I.N. for the same motorcycle as it appears on the steering head.

NOTE:

Always give the full 17-digit Vehicle Identification Number when ordering parts or making any inquiry about your motorcycle.

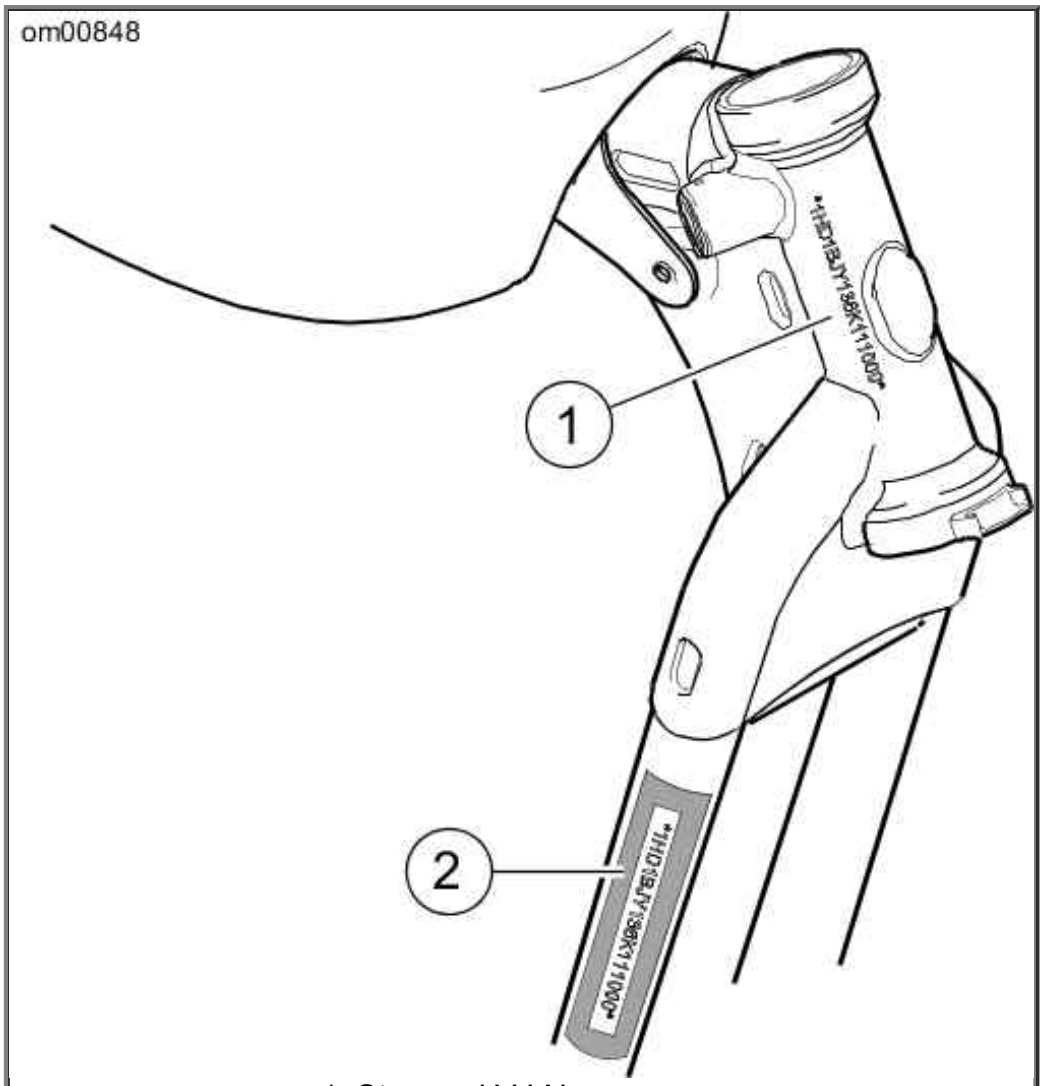

1. Stamped V.I.N.
2. V.I.N. label

V.I.N. Locations: Sportster Models

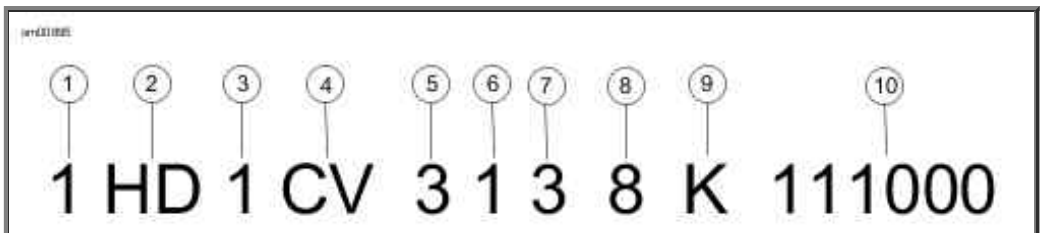

Typical Harley-Davidson V.I.N.: 2008 Sportster Models

Harley-Davidson V.I.N. Breakdown: 2008 Sportster Models

POSITION	DESCRIPTION	POSSIBLE VALUES
1	Market designation	1=Originally manufactured for sale **within** the United States 5=Originally manufactured for sale **outside** of the United States
2	Manufacturer	HD=Harley-Davidson
3	Motorcycle type	1=Heavyweight motorcycle (901 cc or larger) 4=Middleweight motorcycle (351 cc to 900 cc)
4	Model	See V.I.N. model table
5	Engine type	2=Evolution® 883 cc air cooled, fuel injected

	Engine type	2=Evolution® 883 cc air-cooled, fuel-injected 3=Evolution® 1200 cc air-cooled, fuel-injected 3=Evolution® 1200 cc precision-cooled, fuel-injected
6	Introduction date	1=Regular 2=Mid-year 3=California/regular 4=Cosmetic changes and/or special introductory date 5=California/cosmetic changes and/or special introductory date 6=California/mid-year
7	V.I.N. check digit	Can be 0-9 or X
8	Model year	8=2008
9	Assembly plant	K=Kansas City, MO U.S.A.
10	Sequential number	Varies

V.I.N. Model Codes: 2008 Sportster Models

CODE	MODEL	CODE	MODEL
CN	XL 883 Sportster® 883	CV	XL 1200R Sportster® 1200 Roadster
CP	XL 883C Sportster® 883 Custom	CX	XL 1200L Sportster® 1200 Low
CR	XL 883L Sportster® 883 Low	CZ	XL 1200N Sportster® 1200 Nightster™
CS	XL 883R Sportster® 883R	LA	XR 1200 Sportster® 1200
CT	XL 1200C Sportster® 1200 Custom		

Labels

See Labels: Sportster Models for safety and maintenance labels which were on the vehicle when new. If removed, replacement labels may be purchased for your motorcycle. Refer to Labels: Sportster Models for label descriptions.

Labels: Sportster Models

LABEL	PART NUMBER	DESCRIPTION	LOCATION
1	15368-01A	Battery warning	Top of belt guard (XR 1200) Front left of rear fork (XL models)
2	29466-08	General warnings (XR 1200)	Top of left side cover
3	29127-05B	General warnings (XL models except	Top of air cleaner cover

3	29127-95B	General warnings (XL models except 883R/1200N)	Top of air cleaner cover
4	29404-01A	General warnings (XL 883R/1200N)	Top of air cleaner cover
5	13699-08	Fuse block label (XR 1200)	Inside left side cover
6	13571-07	Fuse block label (XL models)	Inside left side cover
7	15376-06	Battery removal/installation	Inside left side cover

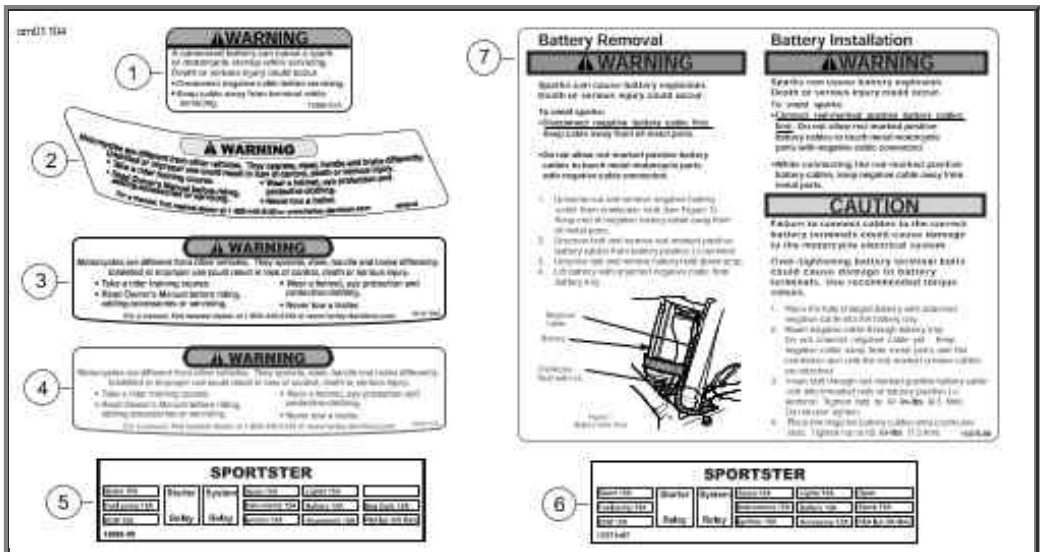

Labels: Sportster Models

Specifications

Specifications: 2008 Sportster Models

Engine: 2008 XL Sportster Models

ITEM	XL 883 MODELS		XL 1200 MODELS	
Number of cylinders	2			
Type	4-cycle, 45 degree V-Type, air cooled			
Compression ratio	8.9-1		9.7-1	
Bore	3.00 in.	76.20 mm	3.50 in.	88.90 mm
Stroke	3.81 in.	96.77 mm	3.81 in.	96.77 mm
Displacement	53.86 cu. in.	883 cc	73.20 cu. in.	1200 cc
Torque	55.0 ft-lbs	74.6 Nm	79.1 ft-lbs	107.3 Nm

	@ 3500 RPM	@ 3500 RPM	@ 4000 RPM	@ 4000 RPM

Engine: 2008 XR 1200 Model

ITEM	SPECIFICATION	
Number of cylinders	2	
Type	4-cycle, 45 degree V-Type, precision cooled	
Compression ratio	10.0-1	
Bore	3.50 in.	88.90 mm
Stroke	3.81 in.	96.82 mm
Displacement	73.41 cu. in.	1203 cc
Torque (World)	74.1 ft-lbs @ 3500 RPM	100.5 Nm @ 3500 RPM

NOTE:

Specifications in this publication may not match those of official certification in some markets due to timing of publication printing, variance in testing methods, and/or vehicle differences. Customers seeking officially recognized regulatory specifications for their vehicle should refer to certification documents and/or contact their respective dealer or distributor.

Ignition System: 2008 Sportster XL Models

COMPONENT	SPECIFICATION	
Ignition timing	not adjustable	
Battery	12 volt, 12 amp/hr, sealed and maintenance free	
Spark plug type	10-6R12	
Spark plug size	12 mm	
Spark plug gap	0.038-0.043 in.	0.97-1.09 mm
Spark plug torque	12-18 ft-lbs	16.3-24.4 Nm

Ignition System: 2008 Sportster XR 1200 Model

COMPONENT	SPECIFICATION
Ignition timing	not adjustable
Battery	12 volt, 12 amp/hr, sealed and maintenance free

Spark plug type	10R12X	
Spark plug size	12 mm	
Spark plug gap	0.035 in.	0.89 mm
Spark plug torque	12-18 ft-lbs	16.3-24.4 Nm

Transmission: 2008 Sportster Models

TRANSMISSION	SPECIFICATION
Type	Constant mesh, foot shift
Speeds	5 forward

Sprocket Teeth: 2008 Sportster Models

DRIVE	ITEM	NUMBER OF TEETH				
		XL 883 MODELS		XL 1200 MODELS		XR 1200
		U.S. MODELS	WORLD MODELS	U.S. MODELS	WORLD MODELS	WORLD MODELS
Primary	Engine	34	38	38	38	34
	Clutch	57	57	57	57	57
Final	Transmission	28	28	29	30	28
	Rear wheel	68	68	68	68	68

Overall Gear Ratios: 2008 Sportster Models

GEAR	XL 883 MODELS		XL 1200 MODELS		XR 1200
	U.S. MODELS	WORLD MODELS	U.S. MODELS	WORLD MODELS	WORLD MODELS
1st	10.782	10.782	9.315	9.004	10.782
2nd	7.702	7.702	6.653	6.432	7.702
3rd	5.728	5.728	4.948	4.783	5.728
4th	4.748	4.748	4.102	3.965	4.748
5th	4.071	4.071	3.517	3.400	4.071

Tire Sizes: 2008 Sportster Models

MODEL	MOUNT	SIZE	NUMBER
XR 1200	front	18 in.	D502F 120/70 ZR 18
XR 1200	rear	17 in.	D502 180/55 ZR 17
XL 883, XL 883R, XL 883L,	front	19 in.	D401F 100/90-19

XL 1200R, XL 1200L, XL 1200N			
XL 883C, XL 1200C	front	21 in.	D402F MH90-21
All XL models	rear	16 in.	D401 150/80B16
2008 vehicles use Dunlop Harley-Davidson tires only.			

Tire Pressures: 2008 Sportster Models

MODEL	LOAD	TIRE PRESSURE (COLD)			
		FRONT		REAR	
		PSI	kPa	PSI	kPa
XL models	solo rider	30	206	36	248
	rider and passenger	30	206	40	275
XR 1200	solo rider	36	248	38	262
	rider and passenger	36	248	42	290

Bulb Chart: 2008 Sportster Models

LAMP	DESCRIPTION (ALL LAMPS 12 VOLT)	BULBS REQUIRED	CURRENT DRAW (AMPERAGE)	HARLEY-DAVIDSON PART NUMBER
Headlamp	high beam/low beam	1	4.58/5.0	68329-03
	position lamp international	1	0.32	53438-92
Tail and stop lamps	tail lamp	1	0.59	68167-04
	stop lamp	1	2.10	68167-04
	tail lamp international	1	0.59	68167-04
	stop lamp international	1	2.10	68167-04
Turn signal lamp	front/running	2	2.25/0.59	68168-89A
	front international	2	1.75	68163-84
	rear	2	2.25	68572-64B*
	rear international	2	1.75	68163-84
Instrument panel	Illuminated with LEDs. Replace entire assembly upon failure.			
*Functions as turn signals, tail lamps and brake lamps on 1200N model.				

Dimensions: 2008 Sportster XL 883 Models

ITEM	XL 883 XL 883R		XL 883C CUSTOM		XL 883L LOW	
	IN.	MM	IN.	MM	IN.	MM
Wheel base	60.0	1524	60.4	1534.2	60.0	1524

Overall length	90.1	2288.5	90.3	2293.6	90.1	2288.5
Overall width	32.7	830.6	32.7	830.6	35.2	894.1
Road clearance	5.6	141	4.4	111.8	3.9	99.1
Overall height*	45.7	1160.8	45.7	1160.8	45.7	1160.8
Saddle height**	27.3	693.4	26.5	673	25.4	645.2
*XL 883R overall height is 44.8 in. 1137.9 mm . **With 180 lb. 81.6 kg rider on seat.						

Dimensions: 2008 Sportster 1200 Models

ITEM	XL 1200C CUSTOM		XL 1200R ROADSTER		XL 1200L LOW		XL 1200N NIGHTSTER		XR 1200	
	IN.	MM	IN.	MM	IN.	MM	IN.	MM	IN.	MM
Wheel base	60.4	1534.2	60.0	1524.0	59.7	1516.4	60.0	1524.0	59.8	1518.9
Overall length	90.3	2293.6	90.1	2288.5	89.1	2263.1	85.8	2179.3	85.4	2169.2
Overall width	32.7	830.6	36.7	932.2	35.2	894.1	36.4	924.6	36.5	927.1
Road clearance	4.4	111.8	5.6	141.0	4.4	111.8	3.9	99.1	5.8	147.3
Overall height	45.7	1160.8	49.2	1249.7	46.8	1188.7	43.6	1107.4	45.1	1145.5
Saddle height*	26.5	673.1	28.1	713.7	26.3	668.0	25.3	642.6	29.2	741.7
*With 180 lb. 81.6 kg rider on seat.										

Capacities: 2008 Sportster XL 883 Models

ITEM	XL 883 XL 883R		XL 883C CUSTOM		XL 883L LOW	
	U.S.	LITERS	U.S.	LITERS	U.S.	LITERS
Fuel tank (total)	3.3 gal.	12.5	4.5 gal.	17.0	3.3 gal.	12.5
Oil tank with filter	2.8 qt.	2.65	2.8 qt.	2.65	2.8 qt.	2.65
Transmission (approximate)	32 oz.	0.95	32 oz.	0.95	32 oz.	0.95
Low fuel warning light on	0.8 gal.	3.0	1.0 gal.	3.8	0.8 gal.	3.0

Capacities: 2008 Sportster 1200 Models

ITEM	XL 1200C	XL 1200R	XL 1200L	XL 1200N	XR 1200

	CUSTOM		ROADSTER		LOW		NIGHTSTER			
	U.S.	LITERS	U.S.	LITERS	U.S.	LITERS	U.S.	LITERS	U.S.	LITERS
Fuel tank (total)	4.5 gal.	17.0	4.5 gal.	17.0	4.5 gal.	17.0	3.3 gal.	12.5	3.5 gal.	13.25
Oil tank with filter	2.8 qt.	2.65	2.8 qt.	2.65	2.8 qt.	2.65	2.8 qt.	2.65	2.8 qt.	2.65
Transmission (approximate)	32 fl. oz.	0.95	32 fl. oz.	0.95	32 fl. oz.	0.95	32 fl. oz.	0.95	32 fl. oz.	0.95
Low fuel warning light on	1.0 gal.	3.8	0.8 gal.	3.0	1.0 gal.	3.8	0.8 gal.	3.0	0.8 gal.	3.0

Weights: 2008 Sportster XL 883 Models

ITEM	XL 883		XL 883C CUSTOM		XL 883L LOW		XL 883R	
	LB.	KG	LB.	KG	LB.	KG	LB.	KG
Weight (as shipped from factory)	563	255	565	256	563	255	568	258
GVWR	1000	454	1000	454	1000	454	1000	454
GAWR front	335	152	335	152	335	152	335	152
GAWR rear	665	302	665	302	665	302	665	302

Weights: 2008 Sportster 1200 Models

ITEM	XL 1200C CUSTOM		XL 1200R ROADSTER		XL 1200L LOW		XL 1200N NIGHTSTER		XR 1200	
	LB.	KG	LB.	KG	LB.	KG	LB.	KG	LB.	KG
Weight (as shipped from factory)	562	255	565	256	557	253	545	247	562	254.9
GVWR	1000	454	1000	454	1000	454	1000	454	1000	454
GAWR front	335	152	335	152	335	152	335	152	335	152
GAWR rear	665	302	665	302	665	302	665	302	665	302

Tire Data

⚠WARNING

Match tires, tubes, air valves and caps to the correct wheel

Match tires, tubes, air valves and caps to the correct wheel rim. Contact a Harley-Davidson dealer. Mismatching can result in damage to the tire bead, allow tire slippage on the rim or cause tire failure, which could result in death or serious injury. (00023a)

⚠WARNING

Use only Harley-Davidson approved tires. See a Harley-Davidson dealer. Using non-approved tires can adversely affect stability, which could result in death or serious injury. (00024a)

Tubeless tires fitted with the correct size inner tubes may be used on all Harley-Davidson laced (wire spoked) wheels. Protective rubber rim strips must be used with tubeless tires (fitted with correct size inner tubes) when mounted on laced (wire spoked) wheels.

⚠WARNING

Use inner tubes on laced (wire spoked) wheels. Using tubeless tires on laced wheels can cause air leaks, which could result in death or serious injury. (00025a)

Tubeless tires are used on all Harley-Davidson cast and disc wheels.

Tire sizes are molded on the tire sidewall. Inner tube sizes are printed on the tube.

⚠WARNING

Harley-Davidson front and rear tires are not the same. Interchanging front and rear tires can cause tire failure, which could result in death or serious injury. (00026a)

⚠WARNING

Do not inflate tire beyond maximum pressure as specified on sidewall. Over inflated tires can blow out, which could result in death or serious injury. (00027a)

⚠WARNING

Harley-Davidson tires are equipped with wear bars that run horizontally across the tread. When wear bars become visible and only 1/32 in. (0.8 mm) tread depth remains, replace tire immediately. Using a worn tire can adversely affect stability and handling, which could result in death or serious injury. Use only Harley-Davidson approved replacement tires. (00090b)

See Specifications: 2008 Sportster Models for tire pressures and sizes.

Gasoline Blends

Your motorcycle was designed to get the best performance and efficiency using unleaded gasoline. Most gasoline is blended with alcohol and/or ether to create oxygenated blends. The type and amount of alcohol or ether added to the fuel is important.

CAUTION

Do not use gasoline that contains methanol. Doing so can result in fuel system component failure, engine damage and/or equipment malfunction. (00148a)

- Gasoline containing METHYL TERTIARY BUTYL ETHER (MTBE): Gasoline/MTBE blends are a mixture of gasoline and as much as 15% MTBE. Gasoline/MTBE blends can be used in your motorcycle.
- ETHANOL is a mixture of 10% ethanol (Grain alcohol) and 90% unleaded gasoline. Gasoline/ethanol blends can be used in your motorcycle if the ethanol content does **not** exceed 10%.
- REFORMULATED OR OXYGENATED GASOLINES (RFG): Reformulated gasoline is a term used to describe gasoline blends that are specifically designed to burn cleaner than other types of gasoline, leaving fewer tailpipe emissions. They are also formulated to evaporate less when you are filling your tank. Reformulated gasolines use additives to oxygenate the gas. Your motorcycle will run normally using this type of gas and Harley-Davidson recommends you use it when possible, as an aid to cleaner air in our environment.
- Do not use race gas or octane boosters. Use of these fuels will damage the fuel system.

Some gasoline blends might adversely affect the starting, driveability or fuel efficiency of the motorcycle. If any of these problems are experienced, try a different brand of gasoline or gasoline with a higher octane blend.

Fuel

Refer to Octane Ratings. Always use a good quality unleaded gasoline. Octane ratings are usually found on the pump.

⚠WARNING

Avoid spills. Slowly remove filler cap. Do not fill above bottom of filler neck insert, leaving air space for fuel expansion. Secure filler cap after refueling. Gasoline is extremely flammable and highly explosive, which could result in death or serious injury. (00028a)

⚠WARNING

Use care when refueling. Pressurized air in fuel tank can force gasoline to escape through filler tube. Gasoline is extremely flammable and highly explosive, which could result in death or serious injury. (00029a)

Modern service station pumps dispense a high flow of gasoline into a motorcycle fuel tank making air entrapment and pressurization a possibility.

Octane Ratings

SPECIFICATION	RATING
Pump Octane (R+M)/2	91 (95 RON)

Catalytic Converters

All international (HDI) and destination Japan model motorcycles are equipped with catalytic converters.

CAUTION

Do not operate catalytic converter-equipped vehicle with engine misfire or a non-firing cylinder. If you operate the vehicle under these conditions, the exhaust will become abnormally hot, which can cause vehicle damage, including emission control loss. (00149a)

CAUTION

Use only unleaded fuel in catalytic converter-equipped motorcycles. Using leaded fuel will damage the emission control system. (00150b)

Controls and Indicators

General: Controls and Indicators

⚠WARNING

Read the CONTROLS AND INDICATORS section before riding your motorcycle. Failure to understand the operation of the motorcycle could result in death or serious injury. (00043a)

Some features explained are unique to certain models. These features may be available as accessories for your Harley-Davidson motorcycle. See a Harley-Davidson dealer for a complete list of accessories that will fit your specific motorcycle.

Sportster XL 1200N Model

See Sportster XL 1200N Model. Unlike all other Sportster models, the XL 1200N is equipped with a convertible side-mounted license plate assembly, which includes an LED-illuminated license plate lamp module. See a Harley-Davidson dealer for LED replacement.

The license plate assembly must be in the extended position during operation. Due to local regulations, this feature may not be found in all destinations.

The standard rear fender-mounted tail lamp assembly common to all other Sportster models is not present on the XL 1200N. Instead, the rear turn signals also function as tail lamps and brake lamps.

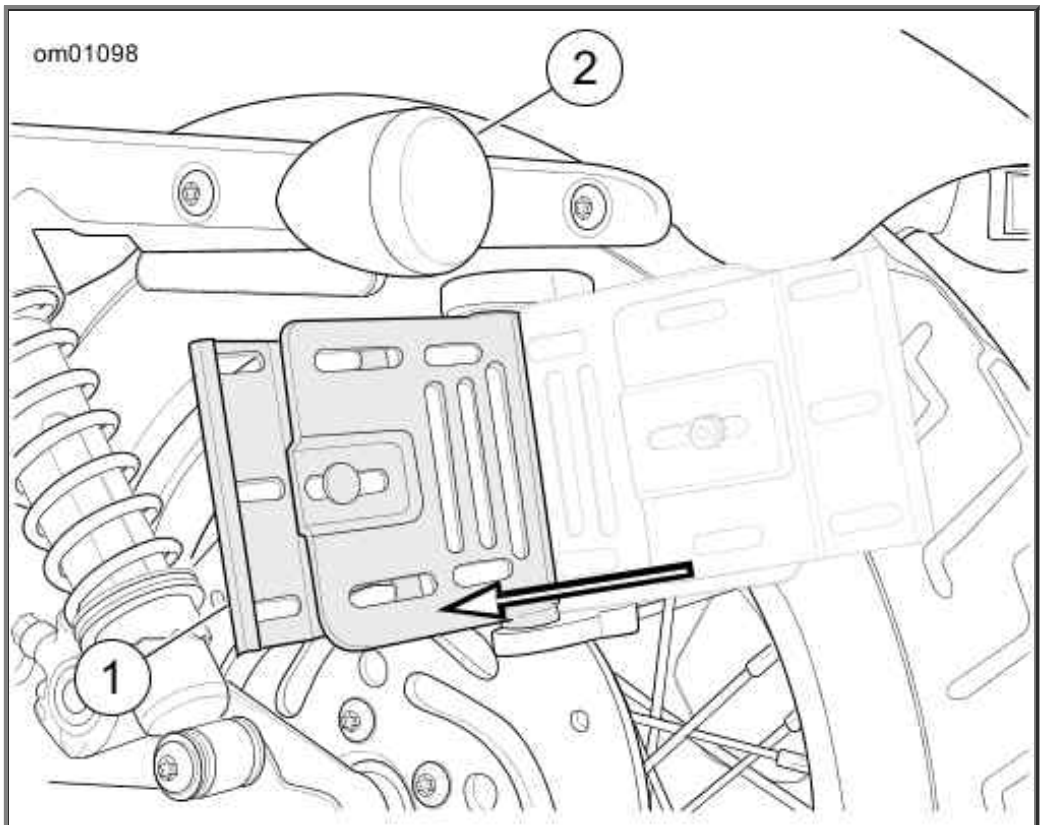

1. Convertible side-mount license plate assembly
2. Rear turn signal lamp (also functions as tail/brake lamp)

Sportster XL 1200N Model

Ignition/Headlamp Key Switch: Sportster Models

⚠WARNING

The automatic-on headlamp feature provides increased visibility of the rider to other motorists. Be sure headlamp is on at all times. Poor visibility of rider to other motorists can result in death or serious injury. (00030b)

See Ignition/Headlamp Key Switch: Sportster Models. The ignition/headlamp key switch controls electrical functions of the motorcycle.

See the YOUR OWNER'S MANUAL section at the front of this book. Be sure to record all your key numbers in the space provided.

CAUTION

Protect your vehicle against theft. After parking your motorcycle, lock the steering head and remove ignition key from switch. Failure to lock your motorcycle may

result in theft and/or equipment damage. (00151a)

⚠WARNING

Do not operate vehicle with forks locked. Locking the forks restricts the vehicle's turning ability, which could result in death or serious injury. (00035a)

CAUTION

Do not lubricate barrel locks with petroleum based lubricants or graphite. Inoperative locks may result. (00152a)

Turn key counterclockwise to remove from the ignition. Refer to Ignition/Headlamp Switch Positions: 2008 Sportster Models for all key switch functions.

NOTES:

- *ACC-Accessories and hazard warning flasher can be turned on. Instrument lamps are on. Brake lamp and horn can be activated. Key may not be removed.*
- *The lamps work when the switch is in the IGNITION position, as required by law in some localities.*

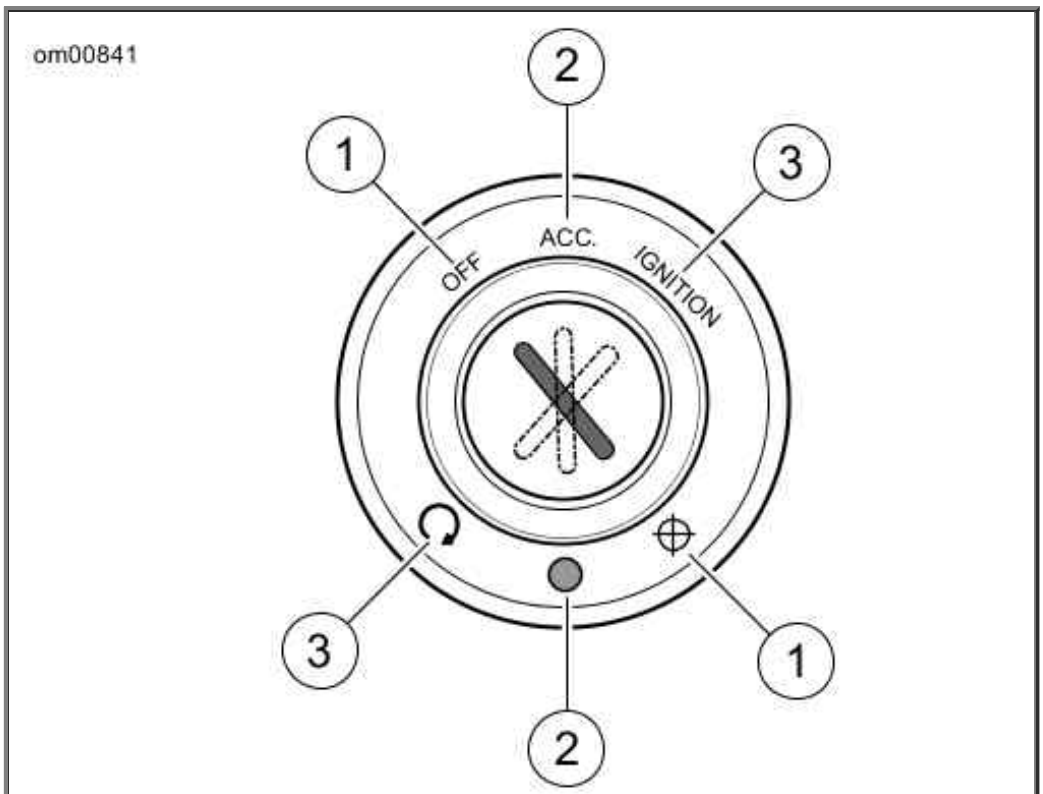

1. Ignition off
2. Accessory ON (ACC.)
3. Ignition ON

Ignition/Headlamp Key Switch: Sportster Models

Ignition/Headlamp Switch Positions: 2008 Sportster Models

LOCATION	SWITCH	FUNCTION

LOCATION AND OPERATION	SWITCH POSITION	FUNCTION
Switch is on right side of steering neck. Push in and turn key to operate.	OFF	Ignition and lamps are off. Key may be removed.
	ACC*	Accessories and hazard warning flasher can be turned on. Instrument lamps are on. Brake lamp and horn can be activated. Key may be removed except for international models.
	IGNITION*	Ignition and lamps are on.
*International models have an additional function - position lamp and tail lamp are also on.		

Hand Controls: Basic Operation

Electric Starter Switch

NOTE:

Off/Run switch MUST be in RUN position to operate engine.

See Handlebar Controls. The electric starter switch is located on the right handlebar control group. See Starting the Engine: Sportster Models for detailed operation procedures.

1. Put the engine off/run switch in the RUN position and the transmission in neutral. Neutral (green) indicator lamp should be illuminated.

2. See Ignition/Headlamp Key Switch: Sportster Models. Turn ignition/headlamp key switch to IGNITION and push the START switch to operate starter motor.

Engine OFF/RUN Switch

See Handlebar Controls. The engine off/run switch (7) turns the ignition power ON or OFF. The engine off/run switch is located on the right handlebar control. Push the top portion of the engine off/run switch to turn off ignition power and shut the engine off. Push the bottom portion of the engine off/run switch to turn on ignition power.

NOTES:

- *The engine off/run switch must be in the RUN position to start or operate the engine.*
- *The engine off/run switch should be used to shut the engine off.*

1. To shut the engine off, push the top of the off/run switch to the ignition OFF position.

2. See Ignition/Headlamp Key Switch: Sportster Models. Turn the ignition key to the OFF position to turn the ignition power completely OFF.

Throttle Control Grip

See Handlebar Controls. The throttle control grip (9) is located on the right handlebar control and is operated with the right hand.

To reduce rider fatigue on long trips, a spring loaded throttle friction adjustment screw (10) is located at the bottom of the throttle grip clamp on non-cruise equipped models.

1. Slowly turn throttle control grip clockwise (toward the front of the bike) to close the throttle (decelerate).
2. Slowly turn throttle control grip counterclockwise (toward rear of bike) to open the throttle (accelerate).

⚠WARNING

Do not tighten throttle friction adjustment screw to the point where the engine will not return to idle automatically. Over-tightening can lead to loss of vehicle control, which could result in death or serious injury. (00031b)

3. Unscrew the throttle friction adjustment screw so the throttle returns to the idle position when the hand is removed from the grip.
4. Screw the throttle adjustment screw in to increase friction on grip. This provides a damping effect on throttle motion.

NOTE:

The throttle friction adjustment screw should not be used under normal stop and go operating conditions.

Clutch Hand Lever

⚠WARNING

Do not position fingers between hand control lever and handlebar grip. Improper hand positioning can impair control lever operation and cause loss of vehicle control, which could result in death or serious injury. (00032a)

See Handlebar Controls. The clutch hand lever (1) is located on the left handlebar and is operated with the fingers of the left hand.

1. Slowly pull clutch hand lever in against handlebar grip to fully disengage clutch.
2. Shift to first gear using the gear shifter lever. See Shifting Gears.
3. Slowly release the clutch hand lever to engage clutch.

A clutch switch is incorporated into the left handlebar switch assembly. It enables the rider to start the vehicle in any gear (or in neutral) as long as the clutch lever is pulled in. If the clutch is not disengaged, the vehicle will not start.

Horn Switch

See Handlebar Controls. The horn is operated by pushing on the horn switch (2) located on the

left handlebar control group.

Headlamp Dimmer Switch

See Handlebar Controls. The headlamp dimmer switch (3) is located on the left handlebar. The switch has two positions to activate the headlamps high or low beams.

- Press the top of the headlamp dimmer beam switch to activate the high beam.
- Press the bottom of the headlamp dimmer switch to return to the low beam.

See Indicator Lamps. The (blue) high beam indicator lamp will illuminate when the high beam is on.

Turn Signal Switches

See Handlebar Controls. Each handlebar control group contains a turn signal switch.

- The right turn signal switch (11) operates the right front and right rear flashing lamps.
- The left turn signal switch (4) operates the left front and left rear flashing lamps.

NOTE:

Front turn signal lamps also function as running lamps (except International models).

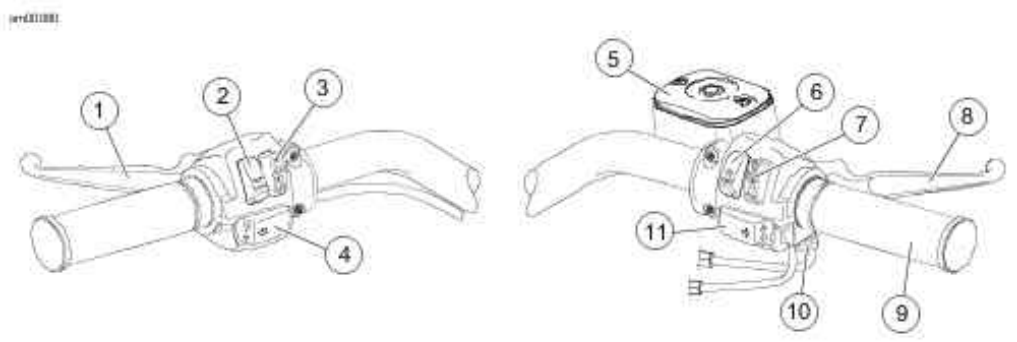

1. Clutch hand lever
2. Horn switch
3. Headlamp dimmer switch
4. Left turn signal switch
5. Master cylinder reservoir
6. Electric starter switch
7. Engine off/run switch
8. Brake hand lever
9. Throttle control grip
10. Throttle friction adjusting screw
11. Right turn signal switch

Handlebar Controls

Turn Signal Switch Operation

The turn signal switches are used by the turn signal module to control turn signal operation based on vehicle speed, vehicle acceleration and turn completion.

Momentarily depress the desired turn signal switch. The turn signal lamps will begin and continue flashing until they are manually or automatically cancelled. As long as the motorcycle is stationary, the signals will flash.

NOTES:

- *If you are signaling to turn in one direction and you depress the switch for the opposite turn signal, the first signal is cancelled and the opposite side begins flashing.*
- *If you want to stop the lamps from flashing, briefly depress the turn signal switch a second time. The turn signal lamps will stop flashing.*

Hazard Warning 4-Way Flasher

Use the following method to activate the four-way flashers.

1. With the ignition key ON and security system disarmed (if equipped), press the left and right turn signal switches at the same time.

2. Turn the ignition key OFF and arm the security system if present and desired. The four-way flashers will continue for two hours.

3. To cancel four-way flashing, disarm the security system if necessary, turn the ignition key ON and press the left and right turn signal switches at the same time.

This system allows a stranded vehicle to be left in the four-way flashing mode and secured until help is found.

Indicator Lamps

See Indicator Lamps. Five indicator lamps are provided.

- The green TURN indicators will flash when turn signals are activated; therefore, flashing indicates the chosen turn direction. When the 4-way hazard flashers are operating, both turn indicators will flash simultaneously.
- The blue BEAM indicator lamp, when lit, signals high beam headlamp operation.
- The green NEUTRAL lamp, when lit, signals the transmission is in neutral gear.
- The red OIL indicator lamp, when lit, signals that oil is not circulating through the engine.

NOTE:

The OIL indicator lamp will glow when the ignition is turned on prior to starting engine. With engine running, lamp should be off when engine speed is above idle.

Several other circumstances that could cause the red oil indicator lamp to signal, include the following:

- If the oil pressure indicator lamp does not go off at speeds above idling, it is usually because of an empty oil tank or diluted oil.
- In freezing weather the oil feed may clog with ice and sludge, preventing oil circulation.
- A grounded oil signal switch wire.
- A faulty signal switch.
- A damaged or improperly installed check valve.
- Trouble with the pump.

CAUTION

If the oil pressure indicator lamp remains lit, always check the oil supply first. If the oil supply is normal and the lamp is still lit, stop the engine at once and do not ride further until the trouble is located and the necessary repairs are made. Failure to do so may result in engine damage. (00157a)

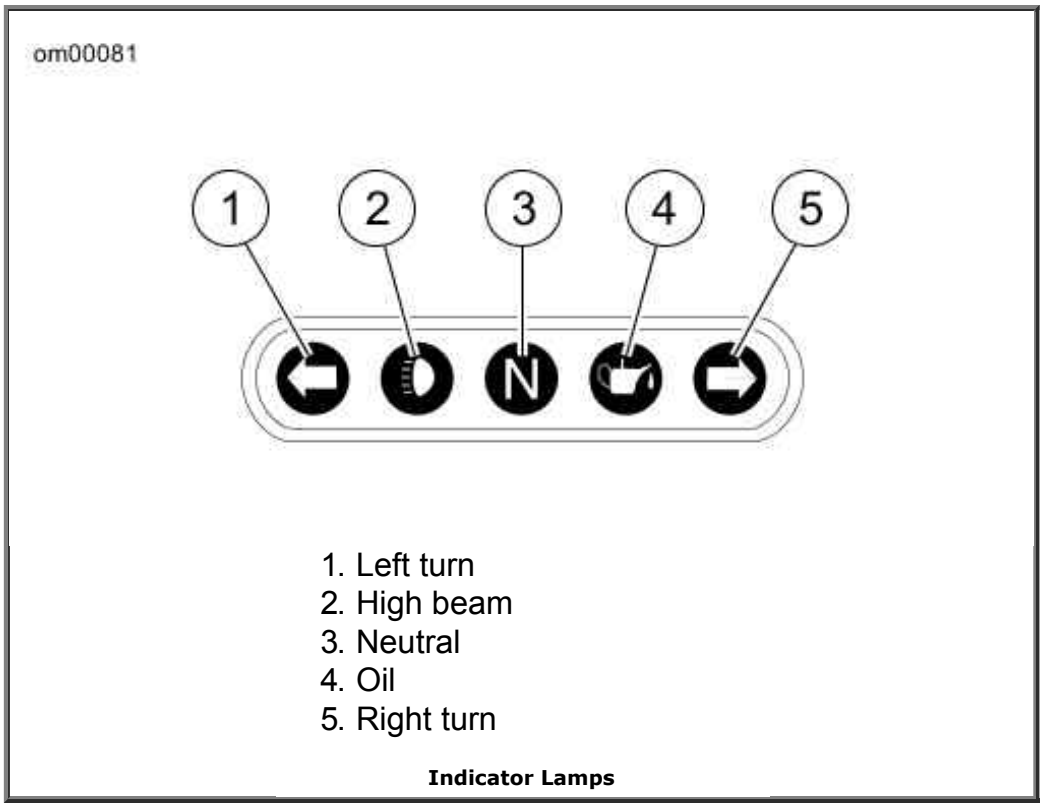

Indicator Lamps

Instruments: Sportster Models

Speedometer

⚠WARNING

Travel at speeds appropriate for road and conditions and never travel faster than posted speed limit. Excessive speed can cause loss of vehicle control, which could result in death or serious injury. (00008a)

See Speedometer/Odometer: XL 1200C Sportster 1200 Custom, Speedometer/Odometer and Tachometer: XL 1200R Sportster 1200 Roadster, and Speedometer/Odometer and Tachometer: XR 1200 Model. The speedometer registers miles per hour (U.S. models) or kilometers per hour (international models) of forward speed. The speedometer also provides the following selectable functions:

- Odometer
- Trip odometers A and B
- 12 or 24 hour clock

The speedometer has a single display window for the above functions.

1. See Speedometer/Odometer: XL 1200C Sportster 1200 Custom, Speedometer/Odometer and Tachometer: XL 1200R Sportster 1200 Roadster, and Speedometer/Odometer and Tachometer: XR 1200 Model. Pressing the function switch (on back of speedometer) with the ignition switch in any position will activate the odometer reading and time. Time and mileage or kilometers may be checked without unlocking ignition switch. Press and release function switch (on back of speedometer) once to view odometer. Press and release button again to display time.

2. To check mileage on trip odometers, the ignition switch must be in the ACC or IGNITION position. Press and release the function switch (on back of speedometer) until the desired trip odometer reading is displayed. An A or B in the upper left of the display window identifies trip odometers.

3. To reset or zero trip odometers, have desired (A or B) odometer in display window. Press function switch (on back of speedometer) and hold button for 2-3 seconds. The trip odometer will be reset to zero.

4. Repeat the previous step if you wish to zero both trip odometers.

Setting Clock

---

1. Turn the ignition switch to ACC or IGNITION.

2. See Speedometer/Odometer: XL 1200C Sportster 1200 Custom, Speedometer/Odometer and Tachometer: XL 1200R Sportster 1200 Roadster, and Speedometer/Odometer and Tachometer: XR 1200 Model. Press and release function switch (on back of speedometer) until time (hour and minutes) is displayed. Press and hold the function switch for five seconds or until 12HR begins to blink in the speedometer display window. Release the button.

3. Press and release the function switch (on back of speedometer) once to advance to a blinking 24HR military style time display. Each time you press and release the button, the display will switch between 12HR and 24HR.

4. When the desired time style is displayed, press and hold the function switch (on back of speedometer) for five seconds. The display will switch to the time display with the hours blinking.

5. Press and release the button repeatedly to advance the hours. Each time you press and release the button, the display will advance one hour.

   NOTE:

   No AM or PM time setting is required. When the correct hour is reached, press and hold function switch to advance to minute setting.

6. When the correct hour is displayed, press and hold the button for five seconds. The minutes display will start blinking.

7. Press and release the button repeatedly to advance the minutes display. Each time you press and release the button, the display will advance one minute.

8. When the correct minutes are displayed, press and hold the button for five seconds. The minutes display will stop blinking, indicating that the clock has been set.

9. Turn the ignition switch OFF.

Tachometer

CAUTION

See OPERATING RECOMMENDATIONS section. Do not operate the engine above maximum safe RPM as shown under OPERATION (red zone on tachometer). Lower the RPM by upshifting to a higher gear or reducing the amount of throttle. Failure to lower RPM may cause equipment damage. (00159a)

The tachometer (if applicable) registers the engine speed in revolutions per minute (RPM).

Tip Indicator Lamp

⚠WARNING

If tip occurs, check all controls for proper operation. Restricted control movement can adversely affect the performance of the brakes, clutch or ability to shift, which could result in loss of vehicle control and death or serious injury. (00350a)

Should motorcycle be tipped over, the word "tip" will appear in the odometer window. Engine will not start until reset. To reset, cycle ignition/headlamp key switch ON-OFF-ON.

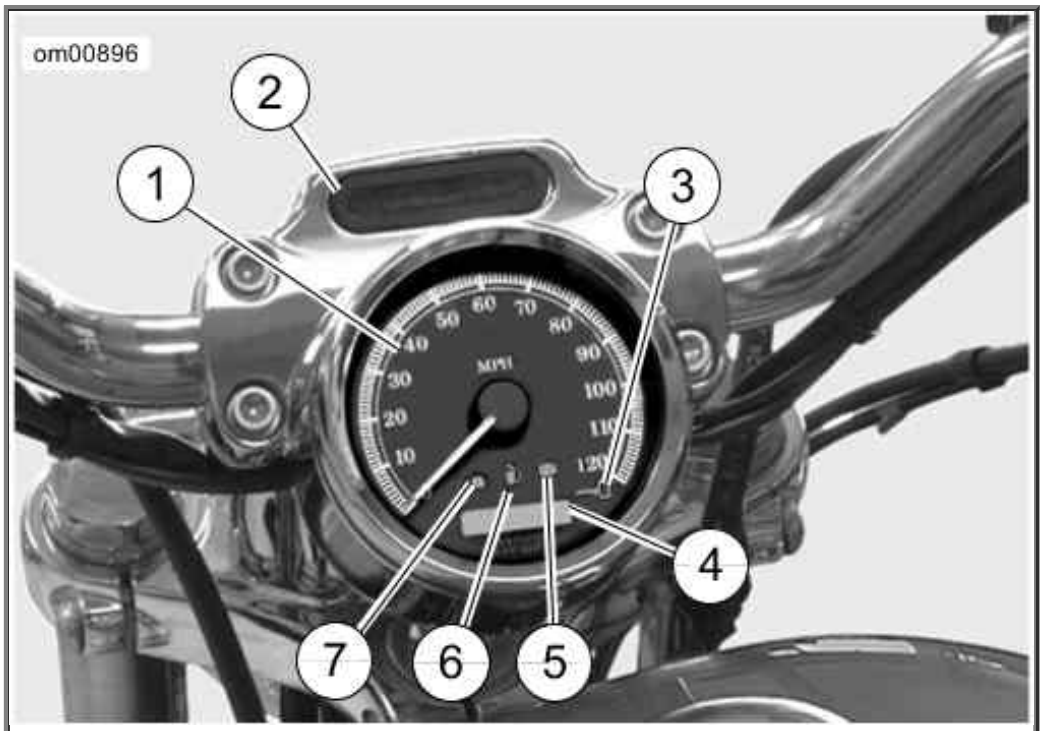

1. Speedometer
2. Function switch (back of gauge)
3. Security system lamp
4. Odometer/trip odometer
5. Battery lamp
6. Low fuel indicator
7. Check engine lamp

Speedometer/Odometer: XL 1200C Sportster

1200 Custom

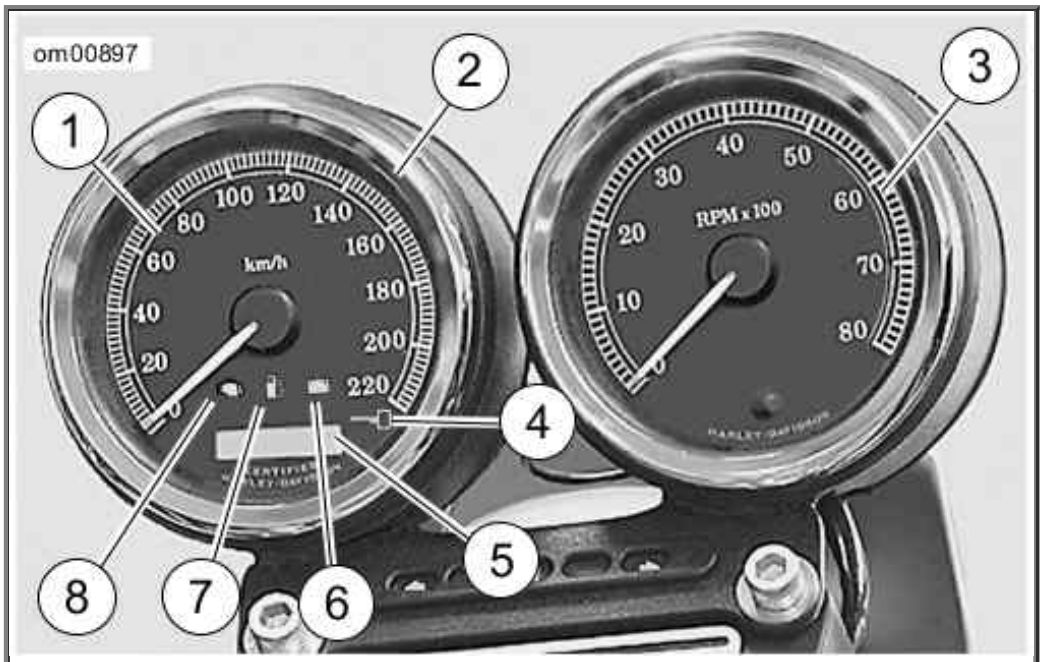

1. Speedometer
2. Function switch (back of gauge)
3. Tachometer
4. Security system lamp
5. Odometer/trip odometer
6. Battery lamp
7. Low fuel indicator
8. Check engine lamp

Speedometer/Odometer and Tachometer: XL 1200R Sportster 1200 Roadster

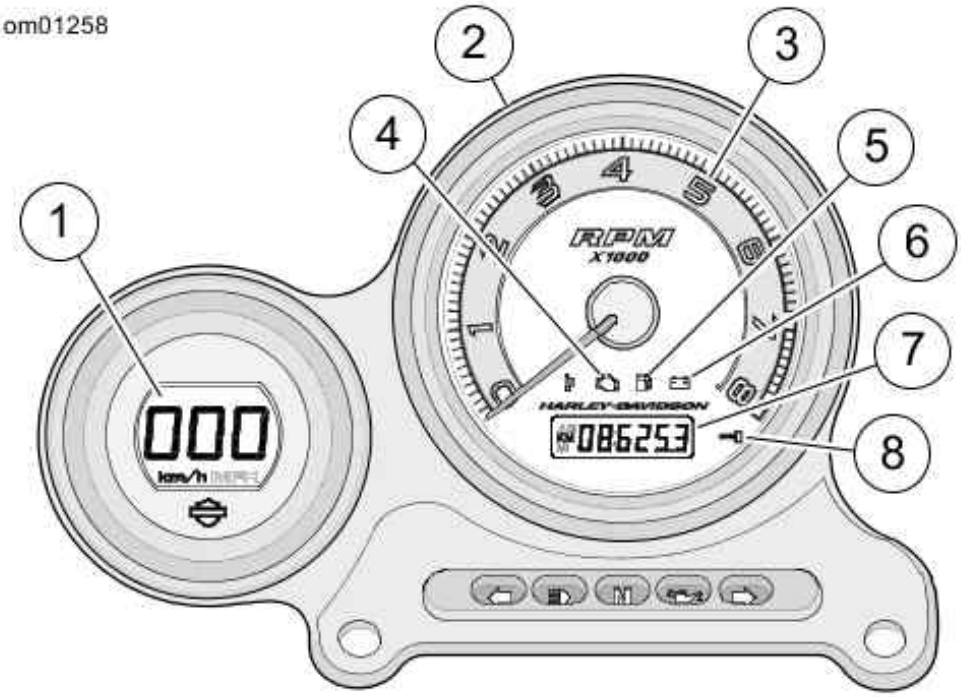

1. Speedometer
2. Function switch (back of gauge)
3. Tachometer
4. Check engine lamp
5. Low fuel indicator
6. Battery lamp
7. Odometer/trip odometer
8. Security system lamp

Speedometer/Odometer and Tachometer: XR 1200 Model

Gear Shift Lever

CAUTION

The clutch must be fully disengaged before attempting a gear shift. Failure to fully disengage the clutch can result in equipment damage. (00182a)

See Shift Pattern: Sportster Models. The gear shift lever is located on the left side of the motorcycle and is operated with the left foot. The transmission is a five speed sequential gear box.

1. Push the gear shift lever all the way down (full stroke) to shift the transmission to the next lower gear.

2. Lift the gear shift lever all the way up (full stroke) to shift the transmission to the next higher gear.

   NOTES:
   - *Release the gear shift lever after each gear change.*
   - *The lever must return to its central position before another gear change can be made.*

First gear is the last gear position that can be found by pushing the gear shift lever full stroke

downward.

Neutral is located between first and second gear. The green neutral indicator lamp on the dash will illuminate when the transmission is in neutral.

To shift from first gear to neutral, lift the gear shift lever 1/2 of its full stroke.

When the motorcycle is standing still and the engine is not running, shifting gears requires a different technique. Before shifting in this condition, move the motorcycle backward and forward with the clutch fully disengaged (clutch lever pulled in). While maintaining slight pressure on the shift lever, shift from one gear to another.

Even with the engine running and the motorcycle standing still, difficulty may be experienced in shifting gears. This difficulty occurs because transmission gears are not turning and shifting parts are not lined up to permit engagement.

CAUTION

When difficulty of shifting gears is experienced, do not under any circumstances, attempt to force the shift. The results of such abuse will be a damaged or broken shifter mechanism. (00161a)

See Shifting Gears for more information.

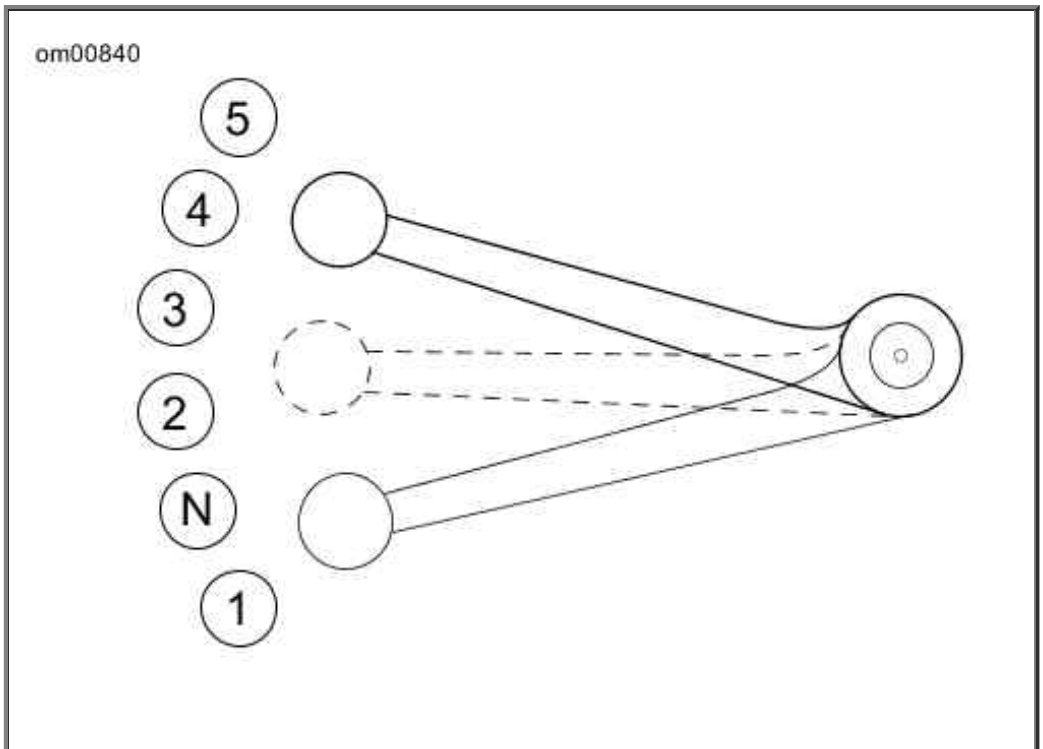

Shift Pattern: Sportster Models

Brake System

⚠WARNING

Do not apply brake strongly enough to lock the wheel. A locked wheel will skid and can cause loss of vehicle

control, which could result in death or serious injury. (00053a)

The rear brake pedal controls the rear wheel brake and is located on the motorcycle's right side. Operate the rear brake pedal with the right foot.

The front brake hand lever controls the front wheel brake and is located on the right handlebar. Operate the hand lever with the fingers of the right hand.

⚠WARNING

Do not position fingers between hand control lever and handlebar grip. Improper hand positioning can impair control lever operation and cause loss of vehicle control, which could result in death or serious injury. (00032a)

Brakes should be applied uniformly and evenly to prevent wheels from locking up. A balance between rear and front braking is generally best.

Jiffy Stand

⚠WARNING

Always park motorcycle on a level, firm surface. An unbalanced motorcycle can fall over, which could result in death or serious injury. (00039a)

The jiffy stand is located on the left side of the motorcycle and swings outward to support the motorcycle for parking.

⚠WARNING

The jiffy stand locks when placed in the full forward (down) position with vehicle weight on it. If the jiffy stand is not in the full forward (down) position with vehicle weight on it, the vehicle can fall over which could result in death or serious injury. (00006a)

⚠WARNING

Be sure jiffy stand is fully retracted before riding. If jiffy stand is not fully retracted, it can contact the road surface causing a loss of vehicle control, which could result in death or serious injury. (00007a)

Rear View Mirrors

⚠WARNING

Objects in mirrors are closer than they appear. Use caution

Objects in mirrors are closer than they appear. Use caution when judging distance of objects in mirrors. Failure to judge correct distances could result in death or serious injury. (00033a)

Your vehicle is equipped with two convex rear view mirrors.

This type of mirror is designed to give a much wider view to the rear than a flat mirror. However, cars and other objects seen in this type of mirror will look smaller and farther away than they actually are.

- Use caution when judging the size or relative distance of objects seen in rear view mirrors.
- Always adjust the rear view mirrors to clearly reflect the area behind the motorcycle before riding.

NOTE:

Adjust mirrors so you can see a small portion of your shoulders in each mirror. This will help you establish the relative distance of vehicles to the rear of your motorcycle.

Fuel Filler Cap: Sportster Models

General

See SAFE OPERATING RULES section and review safety procedures listed below.

CAUTION

Do not spill fuel onto the motorcycle while refueling. Immediately wipe up fuel spills on your motorcycle. Fuel can cause damage to cosmetic surfaces. (00147b)

CAUTION

Use only unleaded fuel in catalytic converter-equipped motorcycles. Using leaded fuel will damage the emission control system. (00150b)

⚠WARNING

Do not store motorcycle with gasoline in tank within the home or garage where open flames, pilot lights, sparks or electric motors are present. Gasoline is extremely flammable and highly explosive, which could result in death or serious injury. (00003a)

⚠WARNING

Avoid spills. Slowly remove filler cap. Do not fill above bottom of filler neck insert, leaving air space for fuel

expansion. Secure filler cap after refueling. Gasoline is extremely flammable and highly explosive, which could result in death or serious injury. (00028a)

⚠WARNING

Do not use aftermarket fuel caps. Aftermarket fuel caps may fit improperly and leak, which could lead to death or serious injury. See a Harley-Davidson dealer for approved fuel caps. (00034a)

XL Models

See Fuel Filler Cap: Sportster XL Models. To open, turn fuel filler cap counterclockwise and lift up. To close, turn fuel filler cap clockwise until it clicks. The ratchet action of the cap prevents overtightening.

NOTE:

Fuel filler cap turns approximately a 3/4 turn before it starts unscrewing.

XR 1200 Model

See Fuel Filler Cap: XR 1200 Model. To open fuel filler cap, pull metal tab up, turn tab counterclockwise and remove cap. To close, insert fuel filler cap, turn tab clockwise and push tab down.

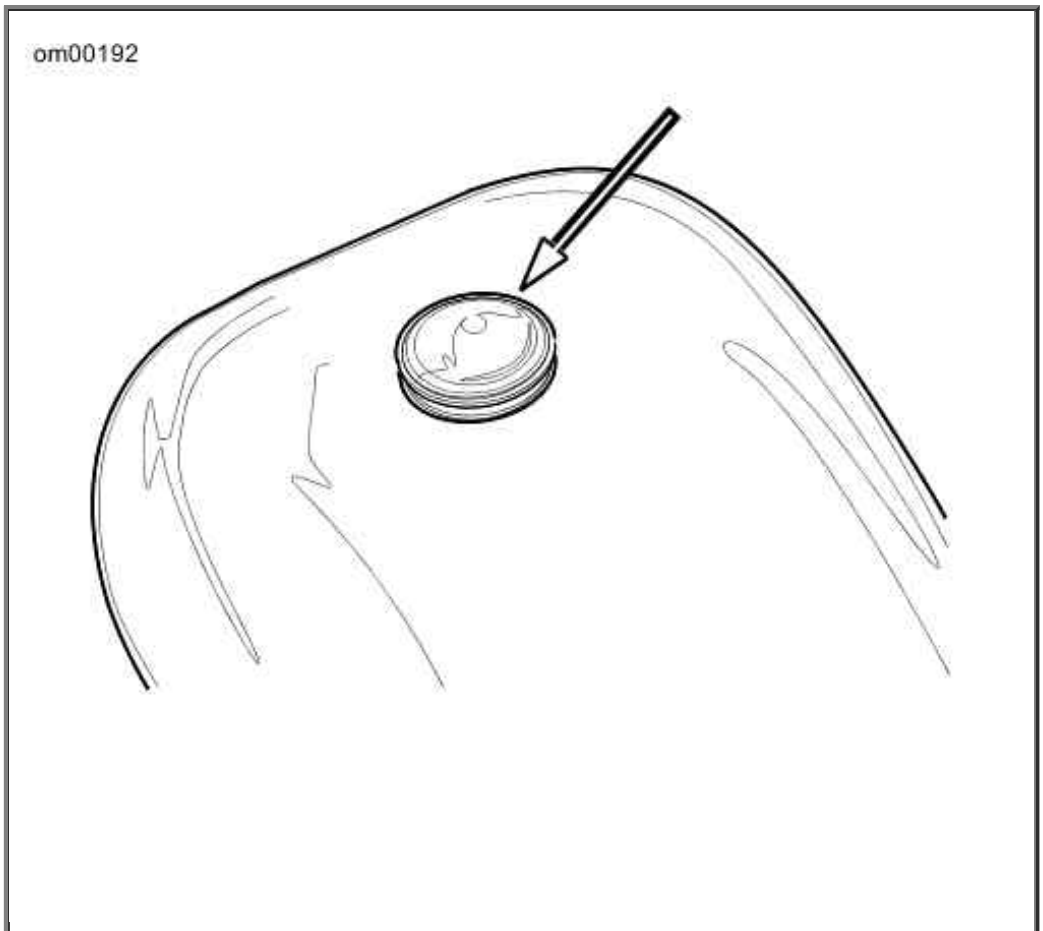

Fuel Filler Cap: Sportster XL Models

Fuel Filler Cap: XR 1200 Model

Fork Lock: Sportster Models

CAUTION

Protect your vehicle against theft. After parking your motorcycle, lock the steering head and remove ignition key from switch. Failure to lock your motorcycle may result in theft and/or equipment damage. (00151a)

See Fork Lock Location: Sportster Models. Sportster models have the fork lock located on the steering head just above the ignition/headlamp key switch. Using the fork lock immediately after parking your motorcycle will discourage unauthorized use or theft when parking your motorcycle.

⚠WARNING

Do not operate vehicle with forks locked. Locking the forks restricts the vehicle's turning ability, which could result in death or serious injury. (00035a)

To lock fork, see Fork Lock Positions: Sportster Models.

1. Turn fork to full left position.
2. Insert ignition key into fork lock.
3. Turn to right position (clockwise).
4. Remove ignition key.

Fork Lock Location: Sportster Models

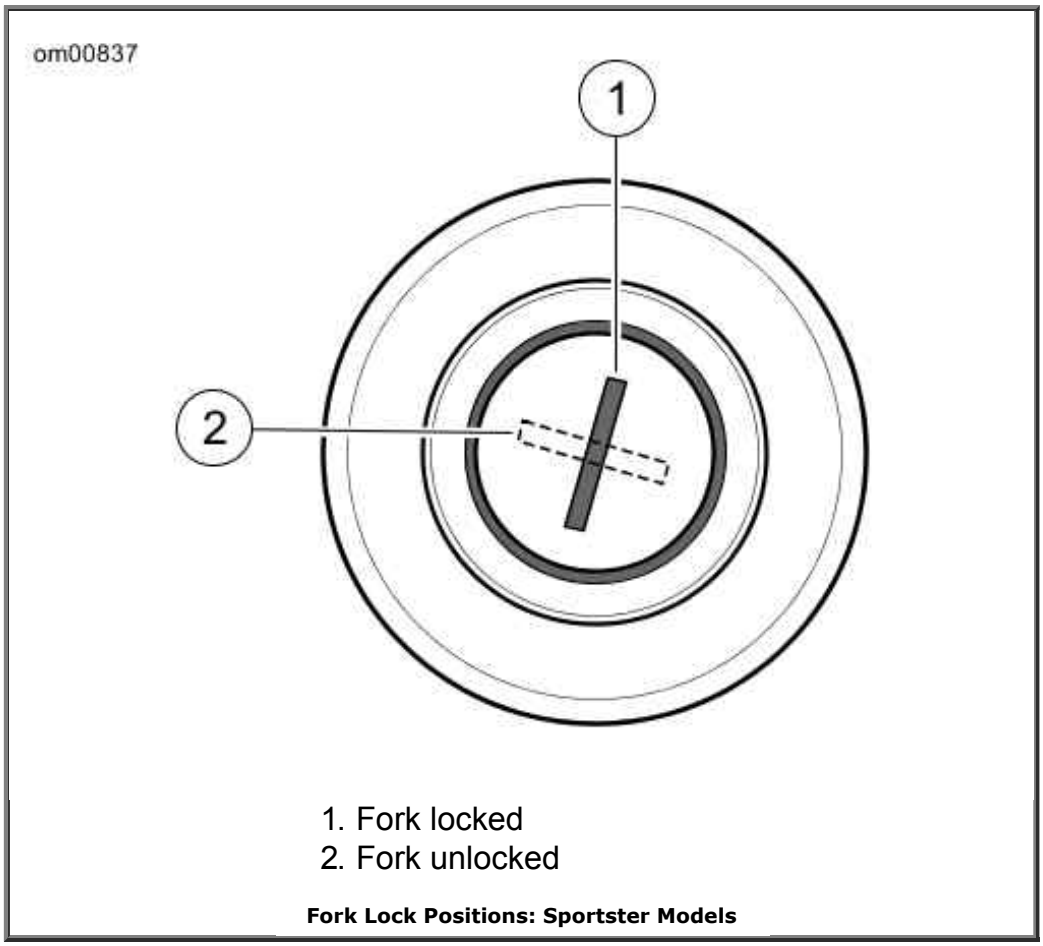

Fork Lock Positions: Sportster Models

Shock Absorber Preload Adjustment: Sportster Models

See Rear Shock Absorber Adjustment: Sportster Models. The rear shock absorber spring preload can be adjusted for the weight the motorcycle is to carry. Increase preload to accommodate additional weight of rider, passenger and/or luggage. Reduce preload if carrying less weight.

NOTE:

See Preload Adjustment: Sportster Models. The shock absorber has either three or five different preload positions, depending on the motorcycle model.

⚠WARNING

Be sure both shock absorbers are adjusted to same preload position. Improper adjustment can adversely affect stability and handling, which could result in death or serious injury. (00036a)

See Spanner Wrench. To adjust the rear shock spring preload, turn spring adjusting cam to the desired position with a SPANNER WRENCH HD-94820-75A . When reducing preload, cam should be rotated in opposite direction.

See Right Side Preload Adjustment: XR 1200 Model. On the XR 1200 model, use SPANNER WRENCH HD-48645 with a 3/8-inch ratchet and extension to adjust the preload on the right side of the motorcycle.

CAUTION

The 883 Low and 1200N are designed for solo operation. If you choose to add an adult passenger and/or cargo to the vehicle, the ride quality will be compromised. See a Harley-Davidson dealer for high capacity rear suspension options. (00487e)

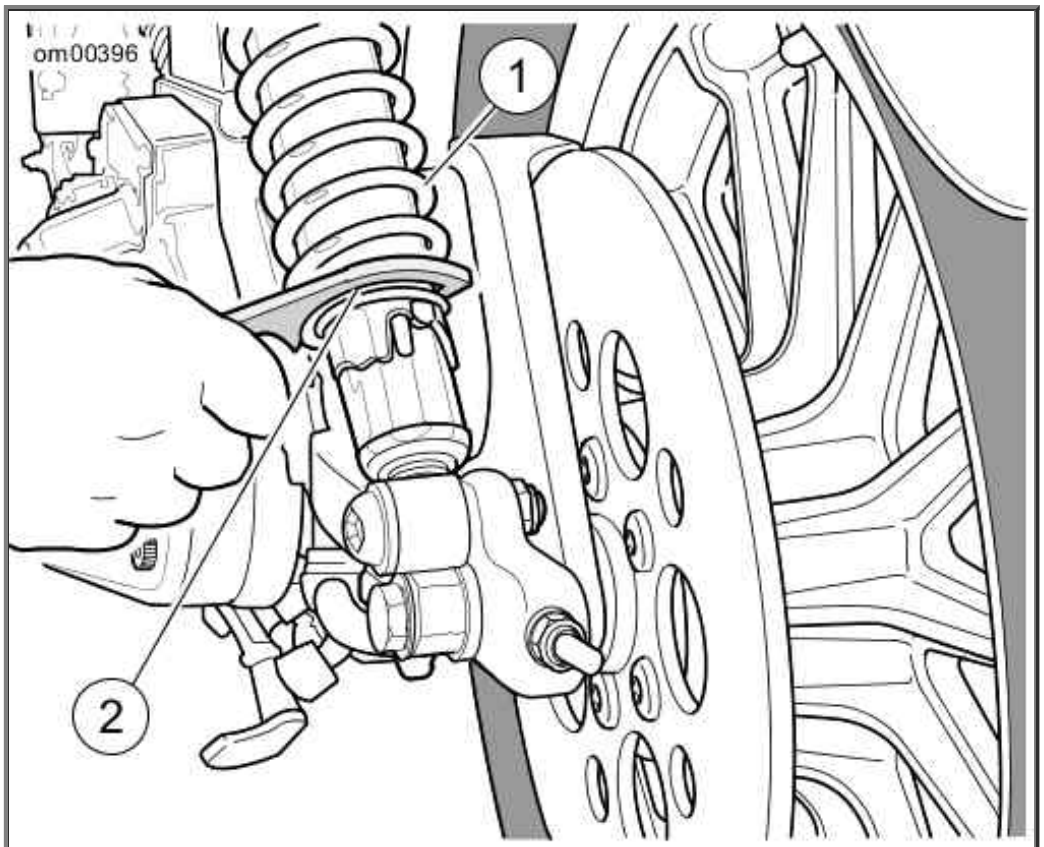

1. Rear shock absorber
2. Adjusting cam preload

Rear Shock Absorber Adjustment:

Sportster Models

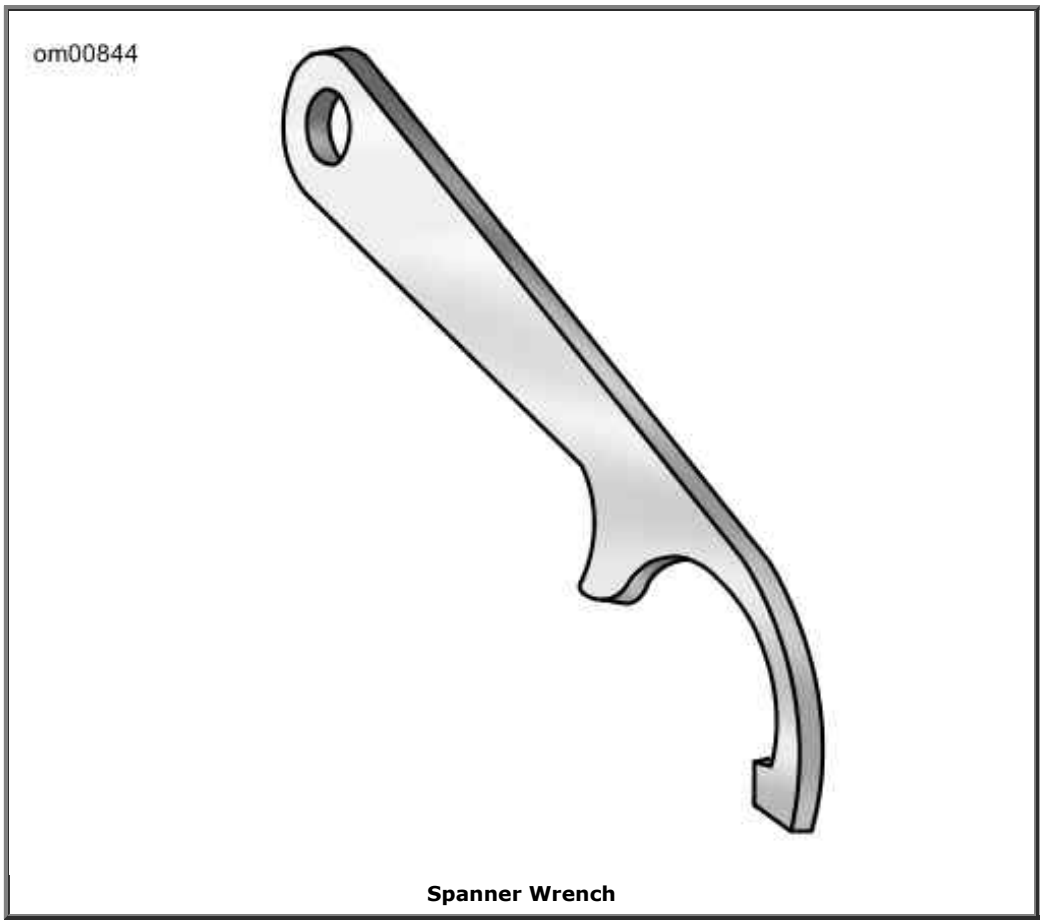

Spanner Wrench

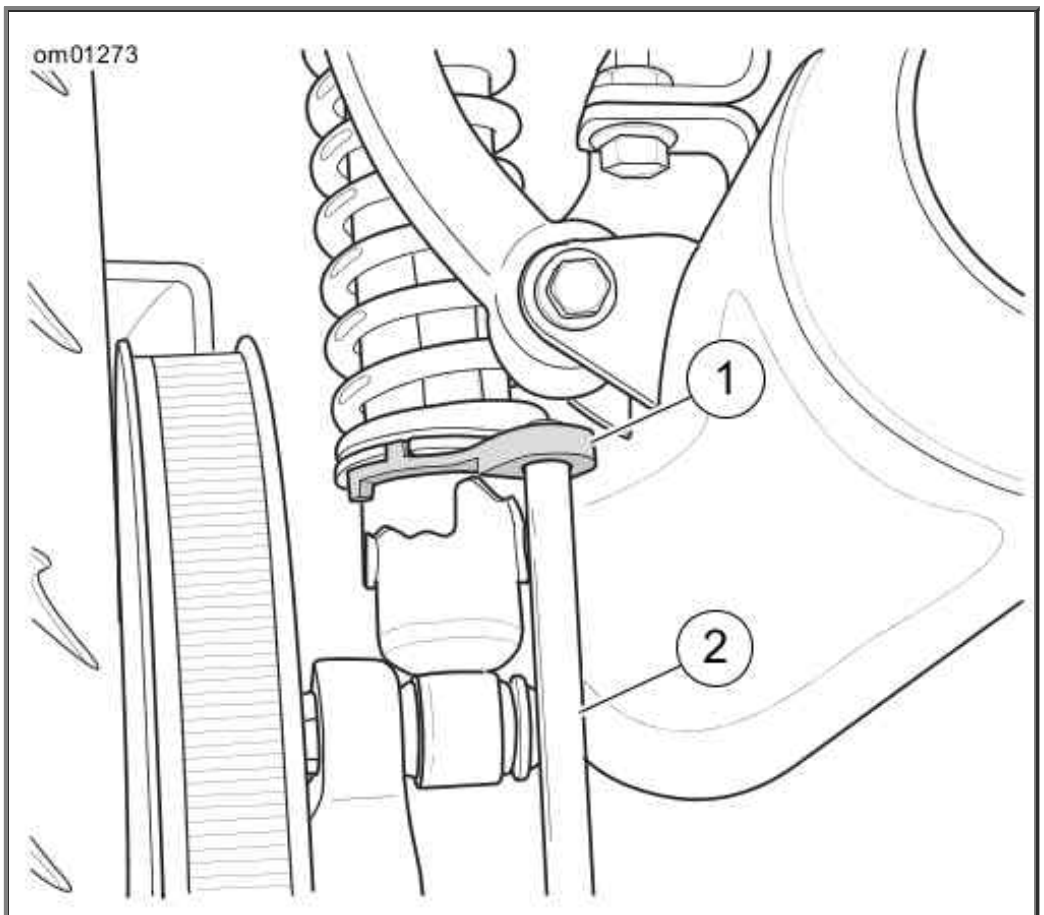

1. Spanner wrench (HD-48645)
2. 3/8-in. extension

Right Side Preload Adjustment: XR 1200 Model

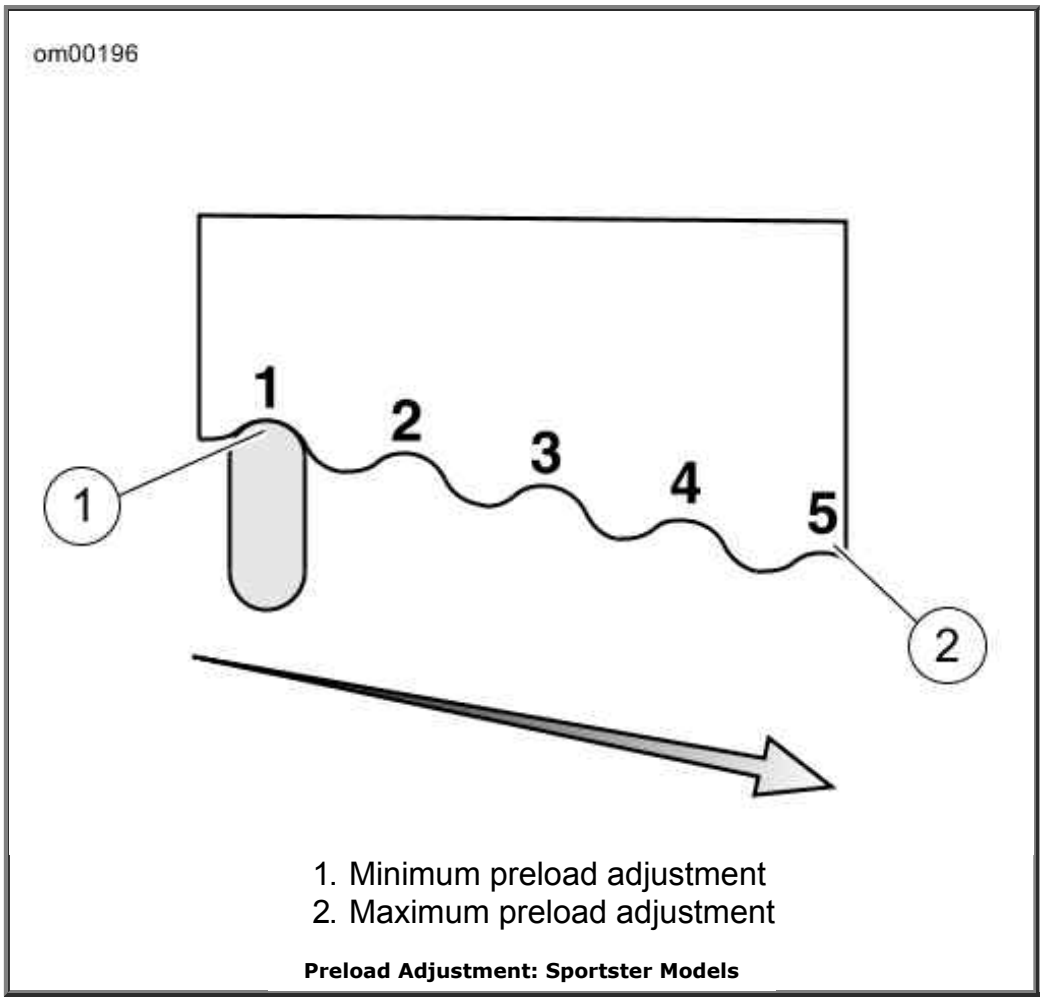

Preload Adjustment: Sportster Models

Harley-Davidson Smart Security System

Harley-Davidson Smart Security System

Components

See Security Module w/Antenna (shown removed). The Harley-Davidson Smart Security System (H-DSSS) consists of a Hands-Free Security Module (HFSM) (1) and a Hands-Free Antenna (2) mounted on the motorcycle, and a Hands-Free Fob **carried** by the rider/passenger.

After parking the motorcycle, turn the ignition key to OFF and the Smart Security System will automatically **arm** within five seconds. While armed, the starter and ignition are disabled and the rider may leave the motorcycle knowing that the module will activate an alarm if someone tampers with the ignition or attempts to move the motorcycle.

If the fob is present, the module will automatically **disarm** when the ignition key is turned to IGNITION or ACCESS.

NOTE:

Do not relocate the module or the antenna on the motorcycle.

Options

Several options are available for the Harley-Davidson Smart Security System from the Harley-Davidson Genuine Motor Accessories and Motor Parts catalog. Options include:

- Smart Siren and Smart Siren II.
- Security Pager and Security Pager Receiver II.
- Replacement Fobs.

See a Harley-Davidson dealer for details.

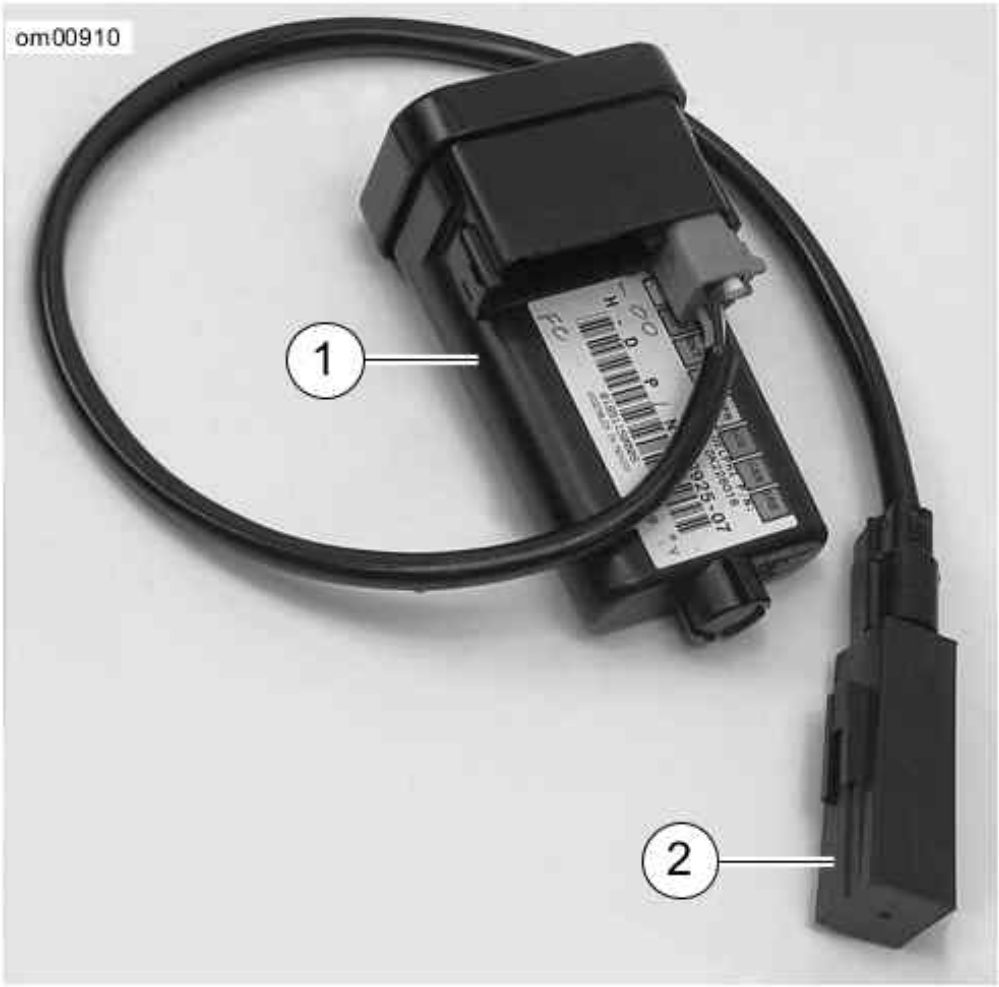

1. Hands-Free Security Module
2. Hands-Free Antenna

Security Module w/Antenna (shown removed)

FCC Regulations

FCC ID: L2C0027TR IC ID: 3432A-0027TR

FCC ID: L2C0028TR IC ID: 3432A-0028TR

This device complies with Part 15 of the FCC Rules and with RSS-210 of Industry Canada rules. Operation is subject to the following two conditions:

(1) This device may not cause harmful interference, and (2) This device must accept any interference received, including interference that may cause undesired operation.

WARNING: Changes or modifications not expressively approved by the party responsible for compliance could void the user's authority to operate the equipment.

The term "IC:" before the radio certification number only signifies that Industry Canada technical specifications were met.

Hands-Free Fob

Fob Assignment

See Hands-Free Fob: Smart Security System. Hands-Free Fobs are electronically assigned to the Harley-Davidson Smart Security System by a Harley-Davidson dealer so that the module can recognize a fob's unique signal. Only two fobs can be assigned to the module at any one time.

Replacement fobs can be purchased from a dealership but can only be assigned to the motorcycle by a trained Harley-Davidson technician.

NOTES:

- *The reusable label found on the fob packaging lists the serial number of the fob. For reference, fix the label to a blank "NOTES" page in the Owner's Manual.*
- *The serial number of the fob is also found on the inside of the fob. See Fob Battery.*
- *The module will arm only if the fob has been assigned by a Harley-Davidson dealer and a Personal Identification Number (PIN) has been entered in the system. The PIN should be recorded on the Personal Information page in the front of this Owner's Manual and on the removable wallet card.*
- *Should the rider misplace the fob or if the fob fails, the rider can refer to the wallet card and use the PIN to manually disarm the system. Refer to Arming and Disarming and Fob Battery.*
- *The PIN can easily be changed by the rider at any time. Refer to Personal Identification Number (PIN).*

Hands-Free Fob: Smart Security System

Riding with a Fob

- Always carry the fob when riding, loading, fueling, moving, parking or servicing the motorcycle. Carry the fob in a convenient pocket.
- Do not leave the fob attached to the handlebars or store the fob in a saddlebag or Tour-Pak®. Unintentionally leaving the fob with the motorcycle when it's parked prevents the system from activating the alarm.
- Do not ride with the fob stored in a metal case or with the fob closer than 3.0 in. 76 mm to a cell phone, PDA, display or other electronic device. Any electromagnetic interference may prevent the fob from disarming the system.
- For added security, always lock the fork and remove the ignition key when parked. If the fob is within range and the motorcycle is unlocked, tampering with the motorcycle will not activate the alarm.

Personal Identification Number (PIN)

The Personal Identification Number (PIN) is a number that can be used to disarm the Harley-Davidson Smart Security System in case an assigned fob is misplaced, fails or if the fob and module cannot communicate because of electromagnetic interference.

A PIN is a five-digit number (1-9, no zeros).

Changing the PIN

To maintain security, the rider can change the PIN at any time. Refer to Changing the PIN.

Changing the PIN

STEP NO.	ACTION	WAIT FOR CONFIRMATION	NOTES
1	Select a 5-digit (1 thru 9) PIN and record on the wallet card from Owner's Manual.		
2	With an assigned fob present, turn **IGN** key **IGNITION**-OFF-**IGNITION**-OFF-**IGNITION.**		
3	Press **left** turn signal switch **3 times**.		
4	Press **right** turn signal switch **1 time** and release.	Turn signals will flash 3 times. Current PIN will appear in odometer. The first digit will be flashing.	See figure showing the odometer window with PIN display.
5	Enter first digit (a) of new PIN by pressing **left** turn signal switch **a** times.		
6	Press **right** turn signal switch **1 time** and release.	The new digit (a) will replace the current in odometer window.	
7	Enter second digit (b) of new PIN by pressing **left** turn signal switch **b** times.		
8	Press **right** turn signal switch **1 time** and release.	The new digit (b) will replace the current in odometer window.	
9	Enter third digit (c) of new PIN by pressing **left** turn signal switch **c** times.		
10	Press **right** turn switch **1 time** and release.	The new digit (c) will replace the current in odometer window.	
11	Enter fourth digit (d) of new PIN by pressing **left** turn signal switch **d** times.		
12	Press **right** turn switch **1 time** and release.	The new digit (d) will replace the current in odometer window.	
13	Enter fifth digit (e) of new PIN by pressing **left** turn signal switch **e** times.		
14	Press **right** turn switch **1 time** and release.	The new digit (e) will replace the current in odometer window.	
15	Before the module rearms, turn the ignition key to **OFF**.	The odometer will return to mileage.	Turning the ignition key to **OFF** stores the new PIN in the module.

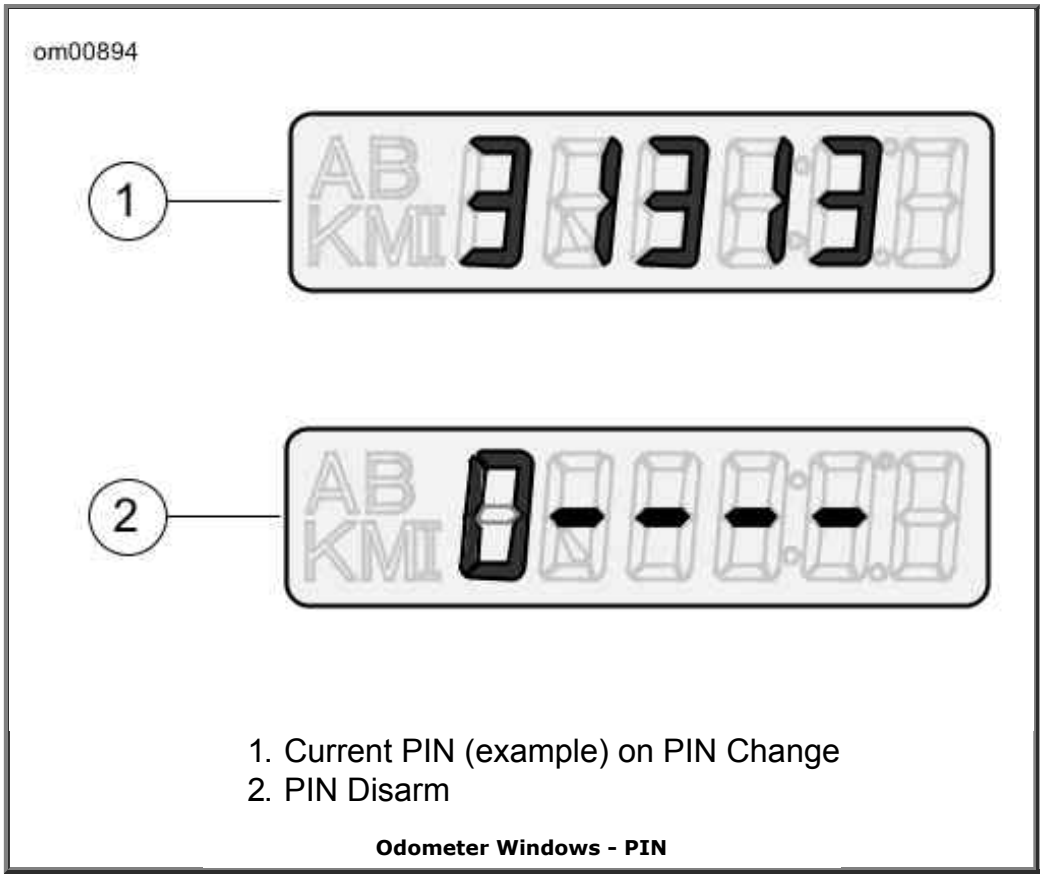

1. Current PIN (example) on PIN Change
2. PIN Disarm

Odometer Windows - PIN

Security Status Indicator

See Security Status Indicator. The illuminated key icon in the speedometer face indicates the status of the Harley-Davidson Smart Security System.

- **Armed:** A key icon that blinks approximately every 3 seconds indicates that the system is armed.
- **Disarmed:** After the ignition/headlamp switch is turned to IGNITION and the system disarms, the key icon will remain illuminated for approximately four seconds and then turn off.
- **Service:** A key icon that remains illuminated longer than four seconds indicates that service of the module is required.

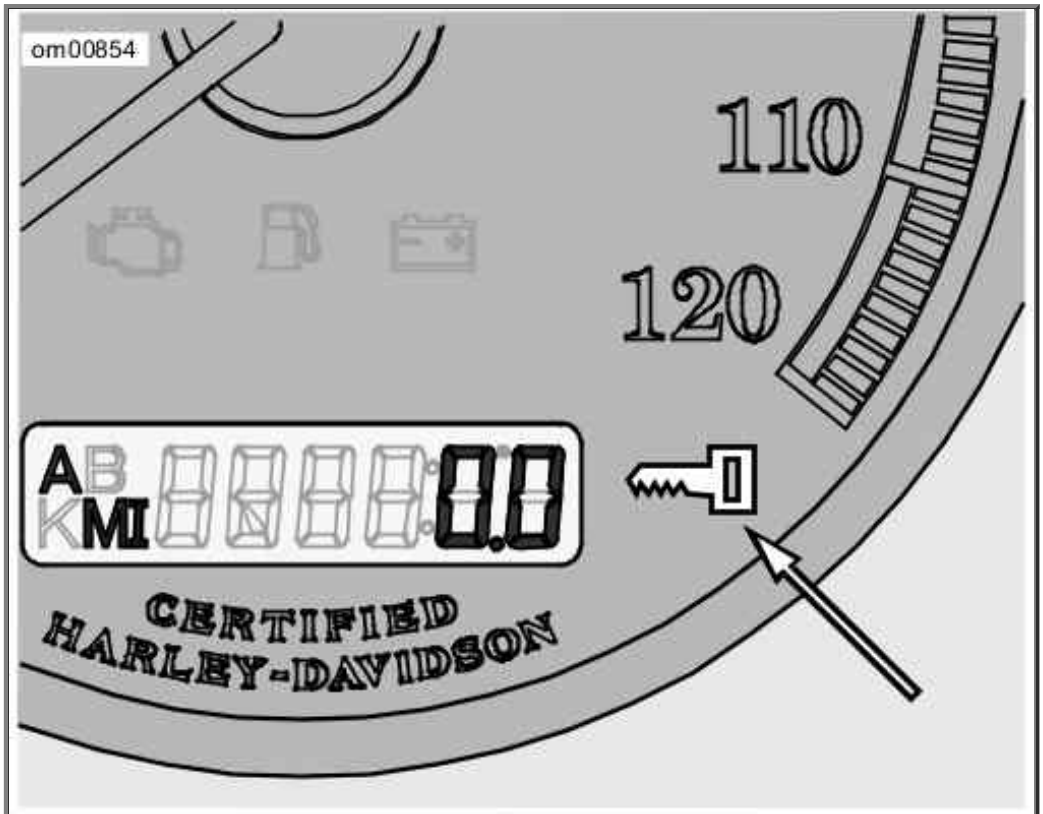

Security Status Indicator

Arming and Disarming

Arming

When the motorcycle is parked and the ignition key is turned to OFF, the Harley-Davidson Smart Security System arms automatically within five seconds if no motion is detected. Even when the fob is present, the system will arm.

On arming, the turn signals will flash twice and the optional siren will chirp twice. While armed, the key icon in the speedometer face will flash every three seconds.

NOTE:

International Models: *The HFSM must be in the Chirp Mode for the siren to chirp on arming or on disarming. See Siren Chirp Mode (Confirmation).*

Disarming

Once disarmed, the rider may ride or move the motorcycle for parking, storage or service without setting off the alarm.

Fob: An armed Smart Security System is automatically disarmed when the ignition key is turned to IGNITION with the fob present.

When the module disarms, the optional siren will chirp once and the key icon will illuminate for a solid four seconds and then turn off.

NOTE:

Any motion, like lifting the motorcycle up off of its jiffy stand, or turning the ignition key to

IGNITION and the module will electronically "poll" for the presence of the fob. If the fob is present, the system disarms.

Personal Identification Number (PIN): If the fob is misplaced or if the present fob fails to communicate with the module, the system can be disarmed with the Personal Identification Number (PIN).

Disarming with a PIN

Do not turn handlebars, straddle seat or lift motorcycle off the jiffy stand. During a PIN disarm, if the Smart Security System detects motorcycle motion the system will activate the alarm.

Entering a PIN to Disarm Harley-Davidson Smart Security System

STEP NO.	ACTION	WAIT FOR CONFIRMATION	NOTES
1	If necessary, verify the current 5-digit PIN.		Should be recorded on wallet card.
2	Turn ignition key to **IGNITION**.		
3	Quickly (within 2 seconds of turning ignition key) hold **both** turn signal switches in until confirmation.	Key icon flashes at fast rate. In the odometer window, a flashing dash will be followed by four more dashes.	See figure showing the odometer window with PIN display. Five dashes will appear in the odometer window.
4	Enter first digit (**a**) in the PIN by pressing **left** turn switch **a times.**	The first digit (**a**) in the odometer will be the first digit in the PIN.	
5	Press **right** turn switch **1 time.**	The first digit is stored and the dash will flash.	Serves as enter key.
6	Enter second digit (**b**) in the PIN by pressing **left** turn switch **b times.**	The second digit (**b**) in the odometer will be the second digit in the PIN.	
7	Press **right** turn switch **1 time.**	The second digit is stored and the next dash will flash.	Serves as enter key.
8	Enter third digit (**c**) in the PIN by pressing **left** turn switch **c times.**	The third digit (**c**) in the odometer will be the third digit in the PIN.	
9	Press **right** turn switch **1 time**.	The third digit is stored and the next dash will flash.	Serves as enter key.
10	Enter fourth digit (**d**) in the PIN by pressing **left** turn switch **d times**.	The fourth digit (**d**) in the odometer will be the fourth digit in the PIN.	
11	Press **right** turn switch **1 time.**	The fourth digit is stored and the next dash will flash.	Serves as enter key.
12	Enter fifth digit (**e**) in the PIN by pressing **left** turn switch **e times.**	The fifth digit (**e**) in the odometer will be the fifth digit in the PIN.	
13	Press **right** turn switch **1**	The fifth digit is stored. The	Smart Security System is

	Press **right** turn switch **1 time**.	The fifth digit is stored. The key icon stops blinking.	Smart Security System is disarmed.

NOTES:

- *At any time during a PIN disarm, if the fob is brought within range of the motorcycle, the Smart Security System will disarm when the module receives the coded signal from the fob.*
- *If a mistake is made while entering PIN, wait two minutes before another disarming attempt.*
- *The Smart Security System will remain disarmed until the ignition key is turned to OFF.*

Arming with Hazard Warning 4-Way Flashers On

If it should be necessary to leave a motorcycle parked along side a roadway, the hazard warning four-way flashers can be turned ON and the Smart Security System armed.

1. Turn ignition key to ACCESS.
2. Simultaneously press both left and right turn signal switches to turn the four-way flashers ON.
3. Turn the ignition key to OFF to arm the Smart Security System.

To turn hazard warning flashers OFF, turn the ignition key to IGNITION and simultaneously press the left and right turn signal switches.

Alarm

Warnings

Once armed, if the motorcycle is moved or lifted up off of its jiffy stand or if the ignition key is turned to IGNITION and the fob is not present, the alarm will warn the operator with three alternate flashes of the turn signals and a chirp of the optional siren.

Within four seconds, if the motorcycle is back on its jiffy stand and no further motion is detected and/or the ignition key is turned to OFF, the module will remain armed without activating the alarm.

If the motorcycle motion continues or the ignition key is not turned back to OFF, the module will issue a second warning four seconds after the first.

NOTE:

During warnings and alarms, the starter motor and the ignition circuits are disabled.

The Alarm

If the Smart Security System is still detecting motion and/or if the ignition key has not been turned back to OFF after a second warning, the system will activate the alarm.

When activated, the Smart Security System will:

- Alternately flash the four turn signals.
- See Optional Smart Siren. Sound the optional siren.

Duration: The alarm will stop within 30 seconds and if no motion is detected, the alarm will not restart.

However, if motorcycle motion continues the system will repeat the 30 second alarm and recheck for motion. The alarm will repeat this 30 second alarm cycle for five minutes (10 cycles) or until the alarm is deactivated.

NOTE:

The alarm will also activate the LED, vibration or audible modes of a Harley-Davidson Security Pager. A pager can operate either in silent or in combination with an optional Smart Siren. The range of a pager can be up to 0.5 mile (0.8 km). See a Harley-Davidson dealer for details.

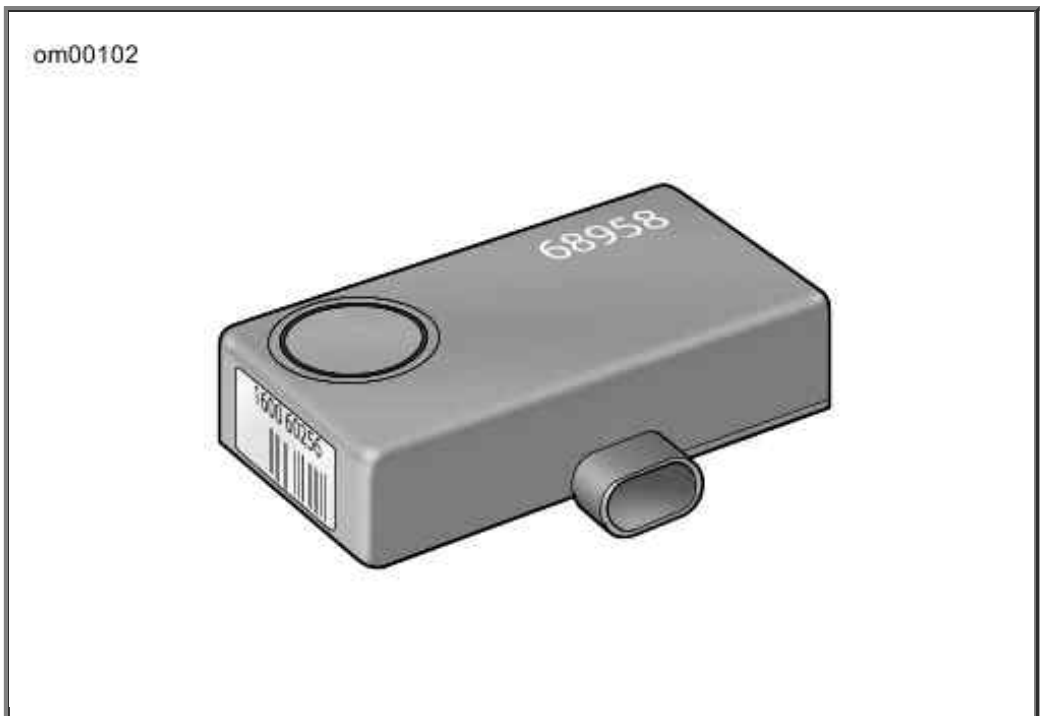

Optional Smart Siren

Deactivate the Alarm

Key Fob: Bring the fob to the motorcycle. After the module identifies that the fob is present, the system will terminate the alarm.

Siren Chirp Mode (Confirmation)

Chirpless Mode

In the chirpless mode, the siren does not chirp on arming or disarming.

NOTE:

Even when armed in the chirpless mode, the siren still chirps warnings on movement and will activate the alarm through cycles.

Chirp Mode

On arming in the chirp mode, the siren responds with two chirps. When disarming, the siren responds with a single chirp.

Switching Modes

Cycling quickly through two armings and disarmings will switch the system from either the chirpless mode or the chirp mode to its opposite.

1. With the fob present, the Ignition Switch to ON and the system disarmed, turn the Ignition Switch OFF.
2. When the system arms (2 flashes of turn signals), immediately turn the Ignition Switch to ON.
3. Wait until the security lamp goes out, then immediately turn the Ignition Switch OFF.
4. When the system arms (2 flashes of turn signals), immediately turn the Ignition Switch to ON and wait for system to disarm.

Transport Mode

It is possible to arm the security system without enabling the motion detector for one ignition cycle. This allows the vehicle to be picked up and moved in an armed state, however, any attempt to start the engine will trigger the alarm.

To Enter Transport Mode

1. Turn the Ignition Switch to IGNITION.
2. Set the Engine Stop Switch to OFF.
3. With an assigned fob within range, turn the Ignition Switch from IGNITION to ACC.
4. Simultaneously press both the left and the right turn signal switches. This must be done within five seconds of turning the Ignition Switch to ACC.
5. After the turn signals flash once, turn the Ignition Switch to OFF and the module is armed.
6. Confirmation: Turn signal blinks three times when armed for one ignition cycle.

To Exit Transport Mode

Return the system to normal operation:

With the fob present, turn the Ignition Switch to IGNITION to disarm the HFSM. To cancel the transport mode, set the Engine Stop Switch to RUN.

Storage and Service Departments

Long Term Parking

To maintain arming, store the fob beyond the range of the module. If the motorcycle is to be moved while parked, have the fob present.

If the motorcycle will not be operated for several months, such as during the winter season, follow the Owner's Manual instructions for storage. Refer to Motorcycle Storage.

Service Departments

When the motorcycle is to be left at a Harley-Davidson dealer, there are two options:

1. Leave an assigned fob with the dealer.
2. To maintain possession of the fob, ask the dealer to disable the module for service (service mode) before leaving the dealership.

Fob Battery

Replacing the Battery

Replace the key fob battery every year.

1. See Hands-Free Fob Battery. Slowly turn a thin blade in the thumbnail slot (1) on the side of the fob to separate the two halves.
2. Remove the battery (2) and discard.

   NOTE:

   Dispose of the old battery in accordance with local regulations.

3. Install a **new** battery (Panasonic 2032 or equivalent) with the positive (+) side down.
4. Align the two halves of the fob and snap together.

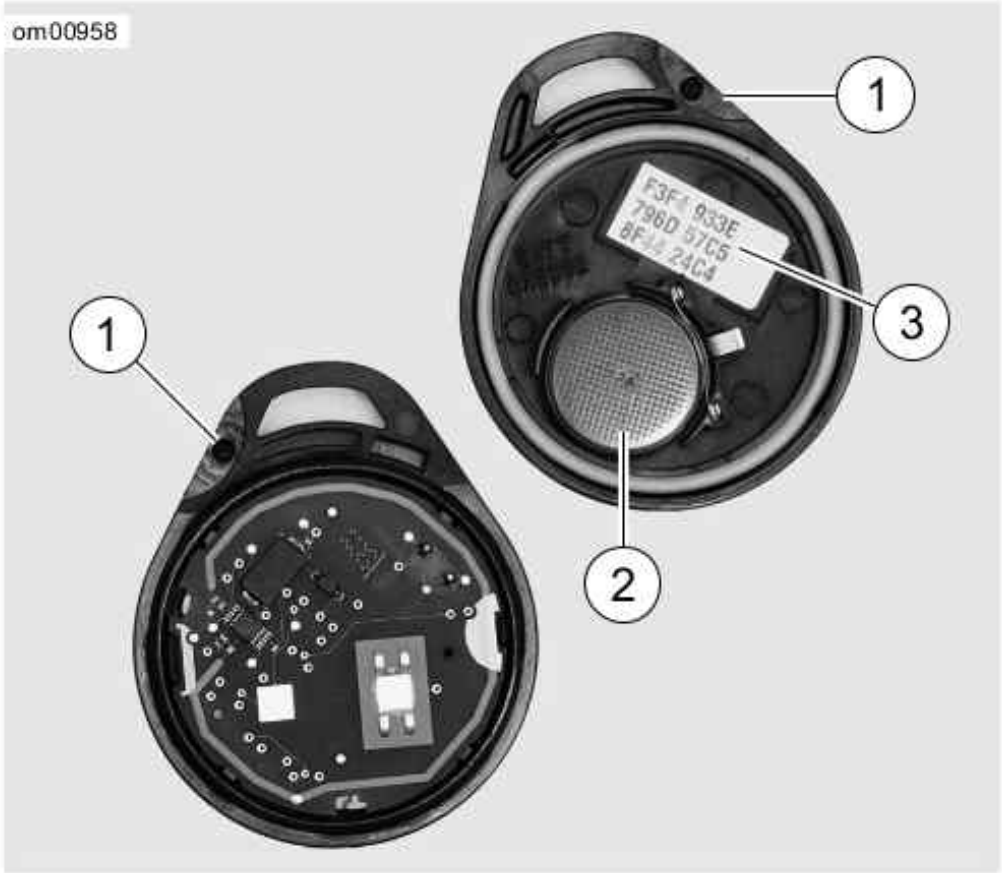

1. Thumbnail slot
2. Battery
3. Fob serial number

Hands-Free Fob Battery

Power Disconnects

Optional Siren

On a power disconnect, to prevent the module from actuating the optional siren:

1. Verify that the fob is present.
2. Turn the ignition key to IGNITION.
3. Pull the main fuse from its holder or disconnect the battery.

Troubleshooting

Key Icon

If the system key icon stays illuminated while riding, see a Harley-Davidson dealer.

Fob

With the fob present, if the Smart Security System continues to actuate warnings and alarms, one

of the following can be the cause:

1. **Electromagnetic Interference:** Other electronic devices, power lines, or other electromagnetic sources can cause the Smart Security System to operate inconsistently.

    a. Verify that the fob is not in a metal enclosure or within 3.0 in. 76 mm of any other electronic devices.

    b. Place the fob on the seat and turn the ignition key to IGNITION. After the module disarms, return the fob to a convenient location.

    c. Move motorcycle at least 15 feet 5 m from the spot of interference.

2. **Discharged Fob Battery:** Use the PIN to disarm the module. Replace the battery. Refer to Fob Battery.

3. **A Damaged Fob:** Use the PIN to disarm the motorcycle. Replacement fobs are available for purchase from a Harley-Davidson dealer.

Siren

- If the siren does not chirp two or three times on a valid arming command from the security module, the siren is either in the Chirpless Mode, not connected, not working, or the siren wiring was opened or shorted while the siren was disarmed.
- If the siren is armed and the internal siren battery is dead, shorted, disconnected, or has been charging for a period longer than 24 hours, the siren will respond with three chirps on arming instead of two.
- The internal siren battery may not charge if the vehicle's battery is less than 12.5 volts.
- If the siren enters the self-driven mode where it is powered from the siren's internal 9 volt battery, the turn signal lamps may or may not alternately flash. If the security module activates the siren, the turn signal lamps will alternately flash. If the siren has been armed and a security event occurs, and the siren is in self-driven mode, the siren will alarm for 20 to 30 seconds and then turn off for 5 to 10 seconds. This alarm cycle will be repeated ten times if the siren is in the self-driven mode.

Operation

Operating Recommendations: Sportster Models

⚠WARNING

Motorcycles are different from other vehicles. They operate, steer, handle and brake differently. Unskilled or improper use could result in loss of control, death or serious injury. (00556c)

- Take a rider training course.
- Read Owner's Manual before riding, adding accessories or servicing.
- Wear a helmet, eye protection and protective clothing.
- Never tow a trailer.

CAUTION

Do not run the engine at extremely high RPM with clutch disengaged or transmission in neutral. Running an engine at high RPM can result in engine damage. (00177a)

CAUTION

Do not exceed the maximum safe RPM specified below under any conditions. Exceeding the maximum safe engine RPM can result in equipment damage. (00248a)

- The maximum recommended safe engine speed is 6000 RPM.
- Do not idle engine unnecessarily for more than a few minutes with motorcycle standing still.

If motorcycle will not be ridden for a period of three weeks or more with security system armed, it is recommended to connect a Battery Tender to maintain battery charge. If security system will not be armed, it is recommended that the 30 amp maxi-fuse be removed. See Electrical Protection: Sportster Models.

CAUTION

Air-cooled engines require air movement over the cylinders and heads to maintain proper operating temperature. Extended periods of idling or parade duty can overheat the engine, resulting in serious engine damage. (00178a)

An engine running long distances at high speed must be given closer than ordinary attention to avoid overheating and possible engine damage.

NOTE:

Have the engine checked regularly and keep it well tuned.

This applies particularly to a motorcycle equipped with windshield and fairing.

⚠WARNING

When riding on wet roads, brake efficiency and traction are greatly reduced. Failure to use care when braking, accelerating or turning on wet roads can cause loss of control, which could result in death or serious injury. (00041a)

NOTE:

When descending upon a long, steep grade, downshift and use engine compression together with intermittent application of both brakes to slow the motorcycle.

⚠WARNING

Continuous use of brake causes overheating and reduced

Continuous use of brake causes overheating and reduced efficiency, which could result in death or serious injury. (00042a)

CAUTION

Do not coast for long distances with the engine off or idling. The transmission is properly lubricated only when the engine is running. Coasting long distances can result in transmission damage. (00180b)

⚠WARNING

Do not tow a disabled motorcycle. Towing can adversely affect stability and handling, which could result in death or serious injury. (00017a)

Break-in Riding Rules

The First 500 Miles (800 Kilometers)

The sound design, quality materials, and workmanship that are built into your new Harley-Davidson will give you optimum performance right from the start.

To allow your engine to wear in its critical parts, we recommend that you observe the riding rules provided below for the first 500 miles 800 kilometers . Adherence to these suggestions will help to assure good future durability and performance.

1. During the first 50 miles 80 kilometers of riding, keep the engine speed below 4000 RPM in any gear. Do not lug the engine by running or accelerating at very low RPM, or by running at high RPM longer than needed for shifting or passing.

   NOTE:

   For models without a tachometer, operate the motorcycle according to the speeds given in Upshift (Acceleration) Gear Speeds and Downshift (Deceleration) Gear Speeds during motorcycle break-in.

2. Up to 500 miles 800 kilometers , vary the engine speed and avoid operating at any steady engine speed for long periods. Engine speed up to 5000 RPM in any gear is permissible.

3. Drive slowly and avoid fast starts at wide open throttle until the engine has warmed up.

4. Avoid lugging the engine by not running the engine at very low speeds in higher gears.

5. Avoid hard braking. New brakes need to be broken-in by moderate use for the first 200 miles 300 kilometers .

Pre-Riding Checklist

⚠WARNING

Read the CONTROLS AND INDICATORS section before riding your motorcycle. Failure to understand the operation of the motorcycle could result in death or serious injury. (00043a)

Before riding your motorcycle at any time, make a general inspection to be sure it is in safe riding condition.

⚠WARNING

Stop the engine when refueling or servicing the fuel system. Do not smoke or allow open flame or sparks near gasoline. Gasoline is extremely flammable and highly explosive, which could result in death or serious injury. (00002a)

⚠WARNING

Avoid spills. Slowly remove filler cap. Do not fill above bottom of filler neck insert, leaving air space for fuel expansion. Secure filler cap after refueling. Gasoline is extremely flammable and highly explosive, which could result in death or serious injury. (00028a)

⚠WARNING

Use care when refueling. Pressurized air in fuel tank can force gasoline to escape through filler tube. Gasoline is extremely flammable and highly explosive, which could result in death or serious injury. (00029a)

1. Verify fuel is present in tank and add fuel if required.
2. Adjust mirrors to proper riding positions.
3. Verify oil is present in oil tank.
4. Check controls to make sure they operate properly. Operate the front and rear brakes, throttle, clutch and shifter. All controls should operate freely without binding.
5. Check steering for proper operation by turning the handlebars through the full operating range. Handlebars should turn smoothly without binding.

⚠WARNING

Be sure tires are properly inflated, balanced and have adequate tread. Inspect your tires regularly and see a Harley-Davidson dealer for replacements. Riding with excessively worn, unbalanced or under-inflated tires can adversely affect stability and handling, which could result in death or serious injury. (00014a)

6. Check tire condition and pressure. Incorrect pressure will result in poor riding characteristics and can affect handling and stability. Refer to tire specifications for correct inflation pressure to use.

⚠WARNING

Be sure headlamp, tail and stop lamp and turn signals are operating properly before riding. Poor visibility of rider to other motorists can result in death or serious injury. (00478b)

7. Check all electrical equipment and switches including the headlamp, stop lamp, turn signals and horn for proper operation.
8. Check for any fuel, oil or hydraulic fluid leaks.
9. Check secondary belt for wear or damage.
10. Service your motorcycle as necessary.

Jiffy Stand Interlock: International Models

Some international models are equipped with a jiffy stand interlock feature.

If the rider attempts to start the engine or pushes the starter button while the transmission is in gear and the jiffy stand is down, then the jiffy stand interlock system will not permit the engine to run. The message "SidE StAnd" will scroll across the odometer to indicate this to the rider. Raising the jiffy stand (or putting the transmission in neutral) will permit the engine to run and clear the message.

If the jiffy stand falls out of the fully retracted position while riding at speeds greater than 10 mph 15 km/h , then the jiffy stand interlock system will maintain engine operation and alert the rider about this by illuminating the indicators (flash twice) and scroll the message "SidE StAnd" across the odometer. The message will remain until the system detects the jiffy stand in the fully retracted position again. The rider may continue to operate the vehicle while in this mode.

The rider may clear the text messages at any time by pressing the function switch once while the vehicle is powered up.

NOTE:

If the operation of raising the jiffy stand and putting the transmission in gear is rapidly executed, the jiffy stand bouncing off the frame could cause the jiffy stand interlock system to activate and stop the engine.

Starting the Engine: Sportster Models

General

CAUTION

The engine should be allowed to run slowly for 15-30

The engine should be allowed to run slowly for 15-30 seconds. This will allow the engine to warm up and let oil reach all surfaces needing lubrication. Failure to comply can result in engine damage. (00563b)

Do not roll the throttle before starting. Rolling the throttle before starting the motorcycle is unnecessary. The engine management system handles starting and running the engine at all temperatures and conditions.

Starting

⚠WARNING

Shift transmission to neutral before starting engine to prevent accidental movement, which could result in death or serious injury. (00044a)

1. Turn ignition/headlamp key switch to IGNITION position. Do not roll the throttle.

   NOTE:

   The engine lamp will light for approximately 4 seconds and you will hear the fuel pump purr for approximately 2 seconds as it operates to fill the fuel lines with gasoline.

2. See Handlebar Controls. Rock the OFF/RUN switch to the RUN position.

3. Squeeze the clutch lever against the handlebar.

   NOTE:

   On international models, the jiffy stand must be raised before starting the motorcycle.

4. Press the starter button to start the motorcycle.

5. When the engine has started, you can operate your motorcycle as you normally would after raising the jiffy stand.

NOTE:

If the fuel tank becomes completely dry, it may take a few seconds longer to start the motorcycle after filling the tank. It will not be necessary to take any extraordinary measures before starting the motorcycle.

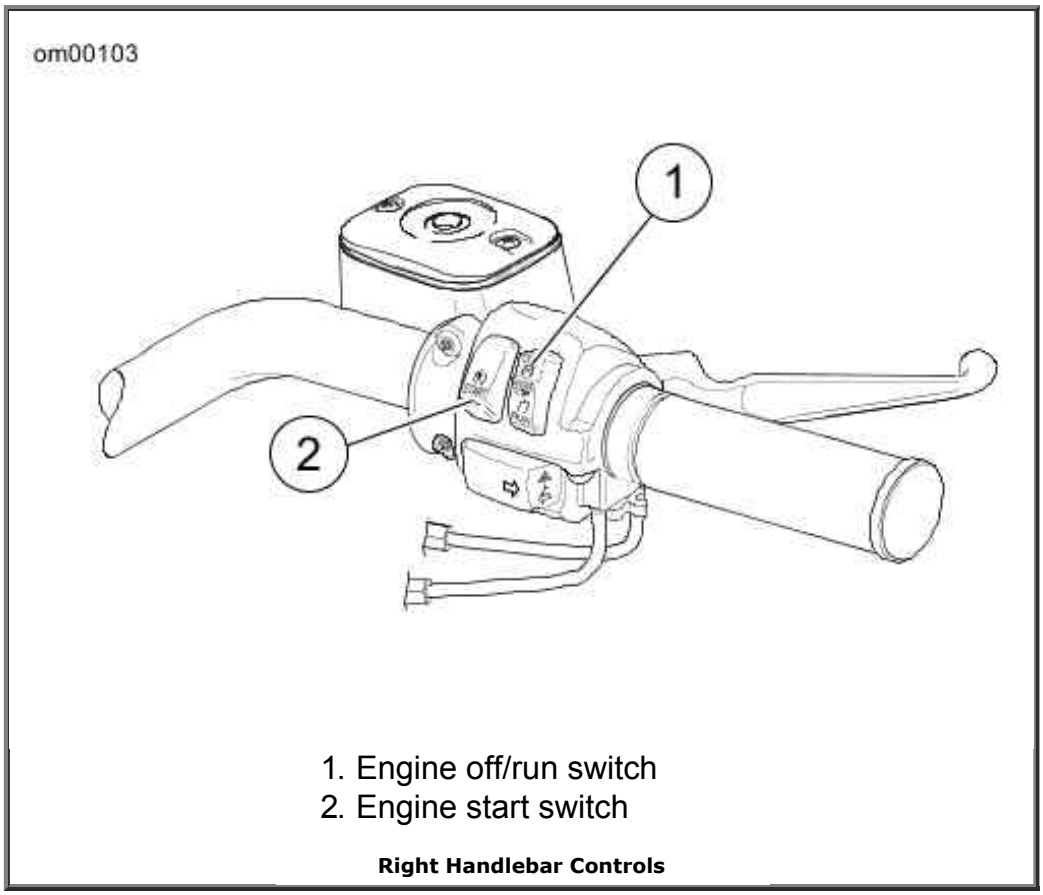

1. Engine off/run switch
2. Engine start switch

Right Handlebar Controls

Stopping the Engine

1. Stop the engine by turning OFF the engine stop switch on right handlebar.
2. Turn OFF the ignition/headlamp key switch. If the engine should be stalled or stopped in any way, turn off the ignition/headlamp key switch at once to prevent battery discharge.

Shifting Gears

Getting Started

CAUTION

The clutch must be fully disengaged before attempting a gear shift. Failure to fully disengage the clutch can result in equipment damage. (00182a)

From neutral, the shift pattern is first gear down, next four gears up.

NOTE:

Always start engine with transmission in neutral. Always start motorcycle forward motion in first gear.

1. With motorcycle engine running and jiffy stand retracted, pull the clutch hand lever in against handlebar grip to fully disengage clutch.
2. Press the foot shift lever down to end of its travel and release. The transmission is now in

first gear.

3. To start forward motion, ease out the clutch lever slowly and at the same time, open throttle gradually.

Upshift (Acceleration)

Refer to Upshift (Acceleration) Gear Speeds. Engage second gear after the motorcycle has reached at the appropriate shifting speed.

Upshift (Acceleration) Gear Speeds

GEAR CHANGE	MPH	KPH
First to second	15	25
Second to third	25	40
Third to fourth	35	55
Fourth to fifth	45	70

1. Close the throttle.
2. Disengage the clutch (pull clutch lever in).
3. See Upshift Sequence: Sportster Models. Lift the gear shift lever up to the end of its travel and release.
4. Ease out the clutch lever and gradually open the throttle.
5. Repeat the previous steps to engage third, fourth, and fifth gears.

NOTES:

- *Disengage the clutch completely before each gear change.*
- *Partially close the throttle so the engine will not drag when clutch is again engaged (clutch lever released).*

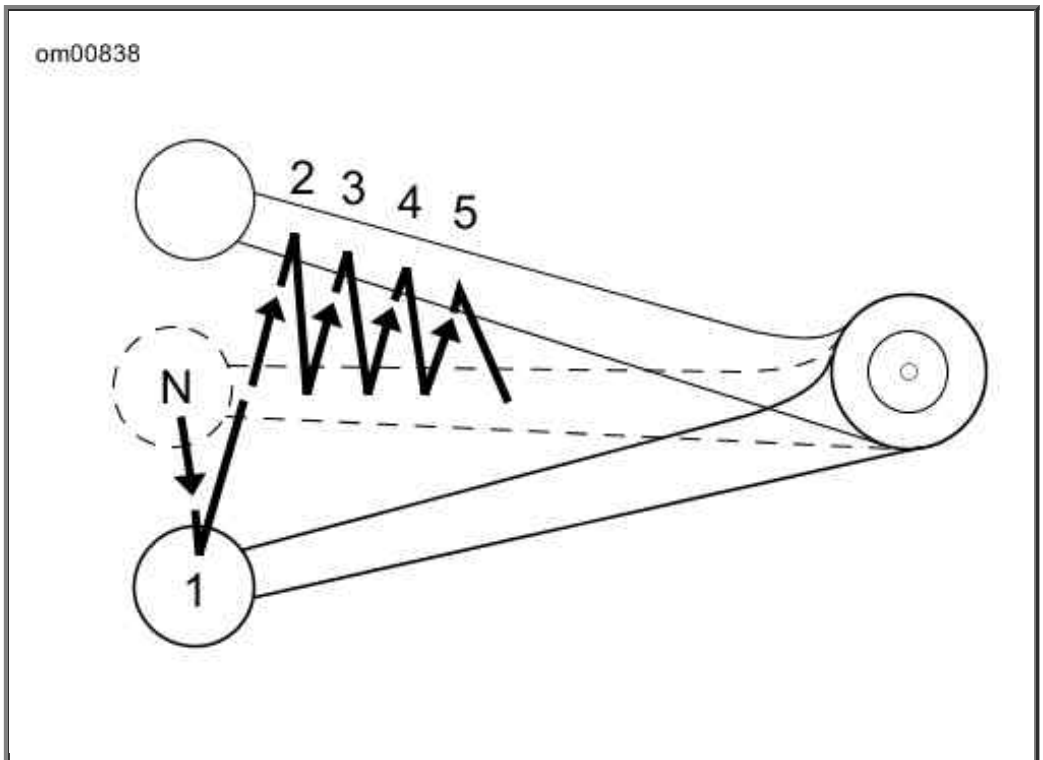

Upshift Sequence: Sportster Models

Downshift (Deceleration)

⚠WARNING

Do not downshift at speeds higher than those listed in the Changing Gear Speeds table. Shifting to lower gears when speed is too high can cause the rear wheel to lose traction and lead to loss of vehicle control, which could result in death or serious injury. (00045a)

Gear shift pattern is first gear down; next four gears up. Refer to Downshift (Deceleration) Gear Speeds for shifting speeds.

Downshift (Deceleration) Gear Speeds

GEAR CHANGE	MPH	KPH
Fifth to fourth	40	65
Fourth to third	30	50
Third to second	20	30
Second to first	10	15

NOTE:

The shifting points shown in the tables are recommendations. Vehicle owners may determine that their own individual shifting patterns may differ than those stated and are additionally appropriate for individual riding styles.

See Downshift Sequence: Sportster Models. When engine speed decreases, as in climbing a hill or running at a reduced speed, shift to the next lower gear while partially closing the throttle so

the engine accelerates as soon as the clutch lever is released.

NOTES:

- *Disengage the clutch completely before each gear change.*
- *Partially close the throttle so the engine will not drag when clutch is again engaged (clutch lever released).*

CAUTION

Shift to neutral before stopping engine. Shifting mechanism can be damaged by shifting gears while engine is stopped. (00183a)

The gear shifter mechanism permits shifting the transmission to neutral from either first or second gear.

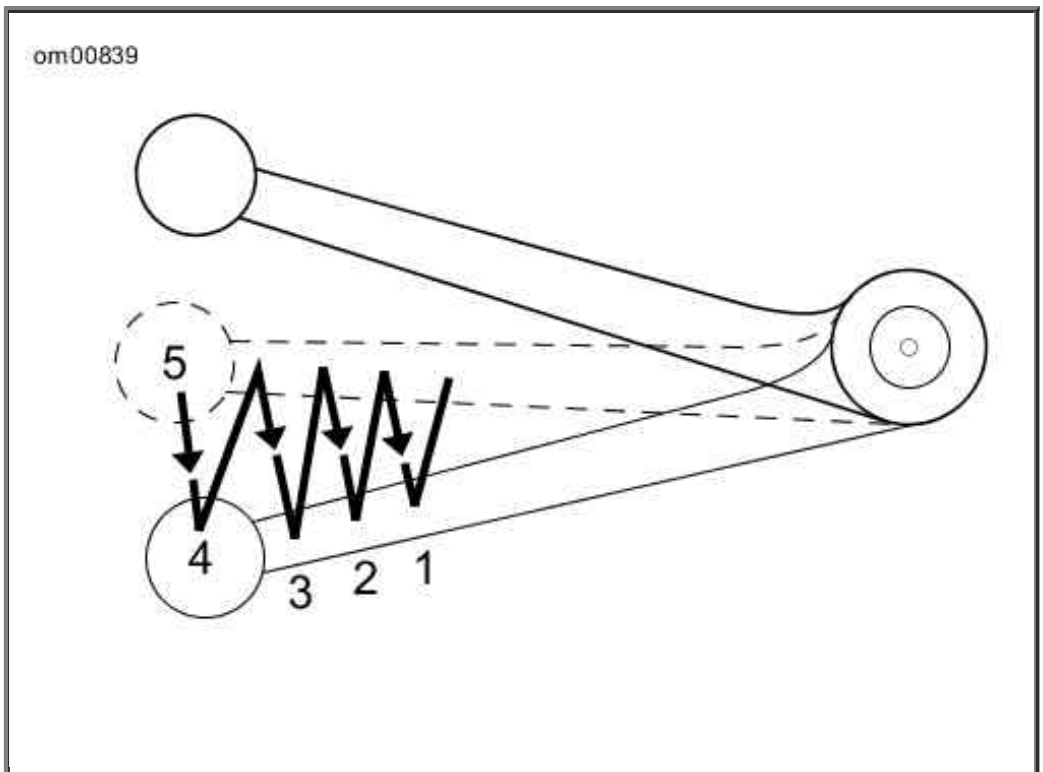

Downshift Sequence: Sportster Models

Maintenance and Lubrication

Safe Operating Maintenance

⚠WARNING

Perform the service and maintenance operations as indicated in the regular service interval table. Lack of regular maintenance at the recommended intervals can affect the safe operation of your motorcycle, which could result in death or serious injury. (00010a)

Good maintenance creates a safe motorcycle. A careful check of certain equipment must be

made after periods of storage. Also, frequently inspect the motorcycle between the regular service intervals to determine if additional maintenance is necessary.

Check the following items:

1. Tires for correct pressure, abrasions or cuts.
2. Belt and primary chain for proper tension, wear or damage.
3. Brakes, steering and throttle for responsiveness and freedom from binding.
4. Brake fluid level and condition. Hydraulic lines and fittings for leaks. Also, check brake pads and discs for wear.
5. Cables for fraying or crimping and free operation.
6. Engine oil and primary chaincase/transmission fluid levels.
7. Headlamp, tail lamp, brake lamp and turn signals for proper operation.

Break-in Maintenance

NOTE:

The performance of new motorcycle initial service is required to keep your new motorcycle warranty in force and to assure proper emissions system operation.

Refer to Regular Service Intervals: 2008 Sportster Models. After a new motorcycle has been ridden its first 1000 miles 1600 kilometers , it should be taken to an authorized Harley-Davidson dealer for initial service operations.

Engine Lubrication

CAUTION

Do not switch lubricant brands indiscriminately because some lubricants interact chemically when mixed. Use of inferior lubricants can damage the engine. (00184a)

Engine oil is a major factor in the performance and service life of the engine. Always use the proper grade of oil for the lowest temperature expected before the next scheduled oil change. Refer to Recommended Engine Oils. Your authorized dealer has the proper oil to suit your requirements.

If it is necessary to add oil and Harley-Davidson oil is not available, use an oil certified for diesel engines. Acceptable diesel engine oil designations include: CF-4, CG-4, CH-4 and CI-4.

The preferred viscosities for the diesel engine oils in descending order are: 20W50, 15W40 and 10W40.

At the first opportunity, see an authorized dealer to change back to 100 percent Harley-Davidson oil.

Recommended Engine Oils

H-D TYPE	VISCOSITY	H-D	LOWEST AMBIENT	COLD WEATHER STARTS

H-D TYPE	VISCOSITY	H-D RATING	LOWEST AMBIENT TEMPERATURE	COLD WEATHER STARTS BELOW 50° F (10° C)
H-D Multi-grade	SAE 10W40	HD 360	Below 40° F 4° C	Excellent
H-D Multi-grade	SAE 20W50	HD 360	Above 40° F 4° C	Good
H-D Regular Heavy	SAE 50	HD 360	Above 60° F 16° C	Poor
H-D Extra Heavy	SAE 60	HD 360	Above 80° F 27° C	Poor

Checking and Adding Oil: Sportster Models

CAUTION

Oil level cannot be accurately measured on a cold engine. For pre-ride inspection, with motorcycle leaning on jiffy stand on level ground, oil should register on dipstick between arrows when engine is cold. Do not add oil to bring the level to the FULL mark on a COLD engine. (00185a)

For dipstick location, see Oil Dipstick Location: Sportster Models (XL Model Shown).

Removing and Replacing Oil Filler Cap

Position motorcycle so that it is leaning on jiffy stand on level ground.

1. Remove filler cap from oil tank on right side of vehicle.
   a. Press straight down on filler cap and release. Cap will pop up.
   b. Pull up on filler cap while turning counterclockwise one-quarter turn as if unscrewing filler cap.
2. Wipe attached dipstick clean.

   NOTE:

   See Filler Cap/Dipstick Slots: Sportster Models. Note that dipstick has a wide slot and a narrow slot and can only be inserted in oil tank one way.

3. Insert dipstick into tank. Turn filler cap 1/4 turn as if screwing filler cap into tank. Press down on cap until flush with oil tank.

Oil Dipstick Location: Sportster Models (XL Model Shown)

Oil Level Cold Check

1. Position motorcycle so that it is leaning on jiffy stand on level ground.
2. Remove filler cap. Wipe attached dipstick clean. Reinstall oil filler cap in tank.
3. Remove oil filler cap again and check oil level on dipstick. See Filler Cap/Dipstick: Sportster Models (typical). Dipstick has two marks. If oil level is at or below lower mark, add only enough oil to bring the level to a point between the two arrows on the dipstick. Replace filler cap.

NOTE:

Refer to Recommended Engine Oils. Use only recommended oil specified under Engine Lubrication.

Oil Level Hot Check

1. Run engine until engine oil is at normal operating temperature. Turn engine off.
2. Position motorcycle so that it is leaning on jiffy stand on level ground.
3. Remove filler cap. Wipe attached dipstick clean. Reinstall oil filler cap in tank.

4. Remove filler cap again and check warm oil level on dipstick. See Filler Cap/Dipstick: Sportster Models (typical). Dipstick has two marks. If oil level in tank is at or below lower mark, add 1 U.S. qt. 0.946 liter of Harley-Davidson oil to tank.

   NOTE:

   Refer to Recommended Engine Oils. Use only recommended oil specified under Engine Lubrication.

5. Install filler cap/dipstick back into oil tank.

6. If you added oil in step 4, remove filler cap and verify correct engine oil level in oil tank. Do not fill oil tank to the level above upper mark on dipstick. Replace filler cap.

CAUTION

Do not allow hot oil level to fall below Add/Fill mark on dipstick. Doing so can result in equipment damage and/or equipment malfunction. (00189a)

CAUTION

Do not overfill oil tank. Doing so can result in oil carryover to the air cleaner leading to equipment damage and/or equipment malfunction. (00190a)

- Check engine oil supply at each complete fuel refill.
- Refer to Regular Service Intervals: 2008 Sportster Models. Oil should be changed at specified intervals in normal service at warm or moderate temperatures.
- See Winter Lubrication. Oil change intervals should be shorter in cold weather. The same holds true if the motorcycle is ridden hard under dusty conditions.

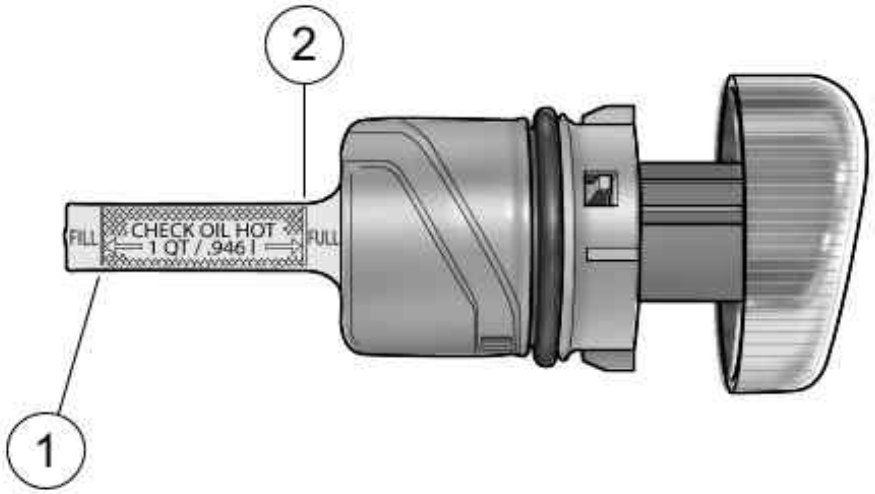

1. Lower mark
2. Upper mark (full)

Filler Cap/Dipstick: Sportster Models

(typical)

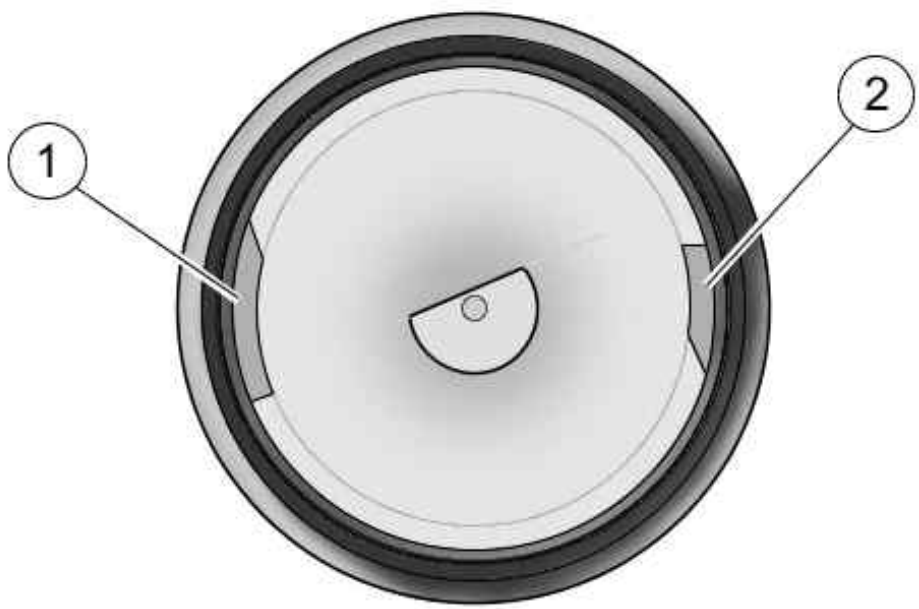

1. Wide slot
2. Narrow slot

Filler Cap/Dipstick Slots: Sportster Models

Changing Oil and Filter: Sportster Models

CAUTION

Do not switch lubricant brands indiscriminately because some lubricants interact chemically when mixed. Use of inferior lubricants can damage the engine. (00184a)

Refer to Regular Service Intervals: 2008 Sportster Models. Completely drain oil tank of used oil at scheduled service intervals. Refill with fresh oil.

NOTES:

- *If vehicle is driven extremely hard, used in competition, or driven on dusty roads, change engine oil at shorter intervals.*
- *Always replace oil filter when changing engine oil. Genuine Harley-Davidson oil filters are available in chrome or black finish (Part No. 63796-77A Chrome or Part No. 63805-80A Black).*

⚠WARNING

Be sure that no lubricants or fluids get on tires, wheels or brakes when changing fluid. Traction can be adversely affected, which could result in loss of control of the motorcycle and death or serious injury. (00047d)

Draining Oil Tank

---

1. Run engine until engine oil has reached normal operating temperature.
2. Remove the oil filler plug/dipstick. Oil will drain more quickly when the filler cap/dipstick is removed from the oil tank.
3. See Oil Tank Drain Hose and Bracket: Sportster Models (XL Model Shown). Place a suitable container directly under the drain hose (1) at the bottom rear of the engine crankcase. The container must be able to hold approximately 3 U.S. quarts 2.8 liters .
4. Loosen worm drive clamp (2) and pull drain plug (3) from end of drain hose. Completely drain engine oil from oil tank. It is not necessary to drain engine crankcase.
5. Replace drain plug into end of drain hose. Tighten worm clamp.

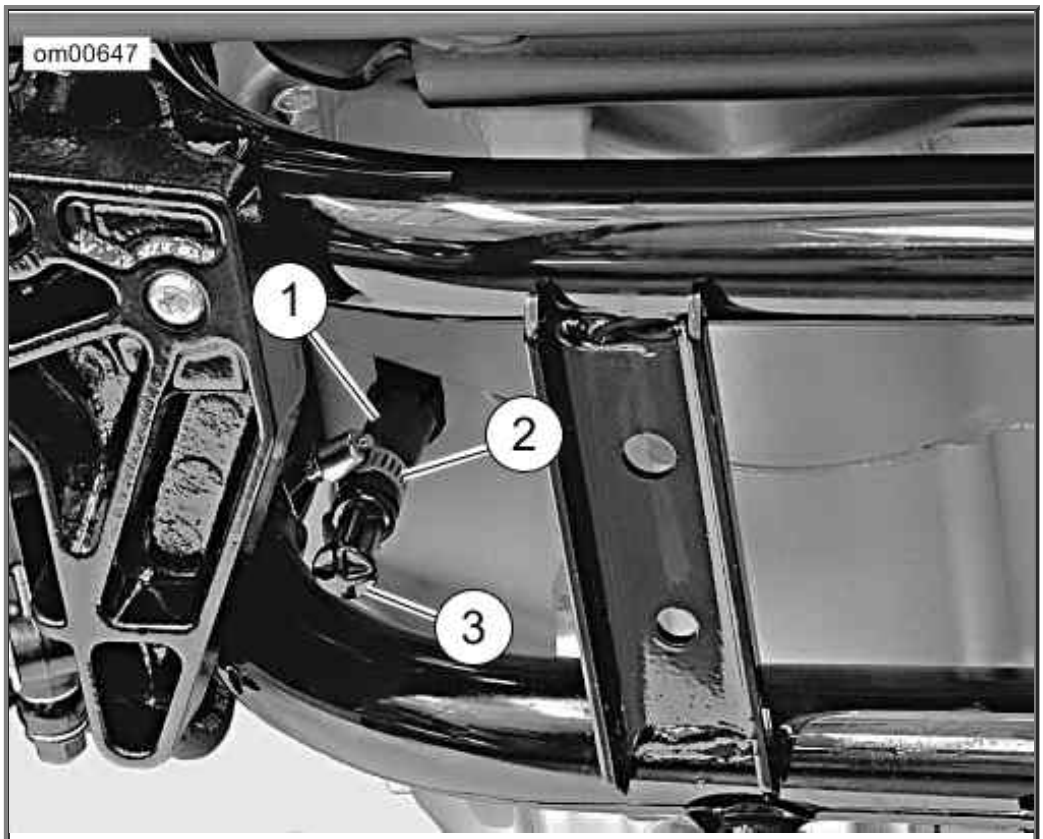

1. Oil tank drain hose
2. Worm drive clamp
3. Drain plug

Oil Tank Drain Hose and Bracket: Sportster Models (XL Model Shown)

Removing Oil Filter

1. Move drain pan beneath front of engine crankcase.

CAUTION

Use Harley-Davidson oil filter wrench for filter removal. This tool can prevent damage to crankshaft position sensor and/or sensor cable. (00192b)

2. See Oil Filter Wrenches and Oil Filter: Sportster Models (XL Model Shown). Remove oil filter using OIL FILTER WRENCH HD-42311 or OIL FILTER WRENCH HD-44067-A . Turn oil filter counterclockwise to remove from filter mount.
3. Drain oil filter into drain pan. Discard oil filter.
4. Clean any oil spills from crankcase and frame.

NOTE:

Dispose of oil and oil filter in accordance with local regulations.

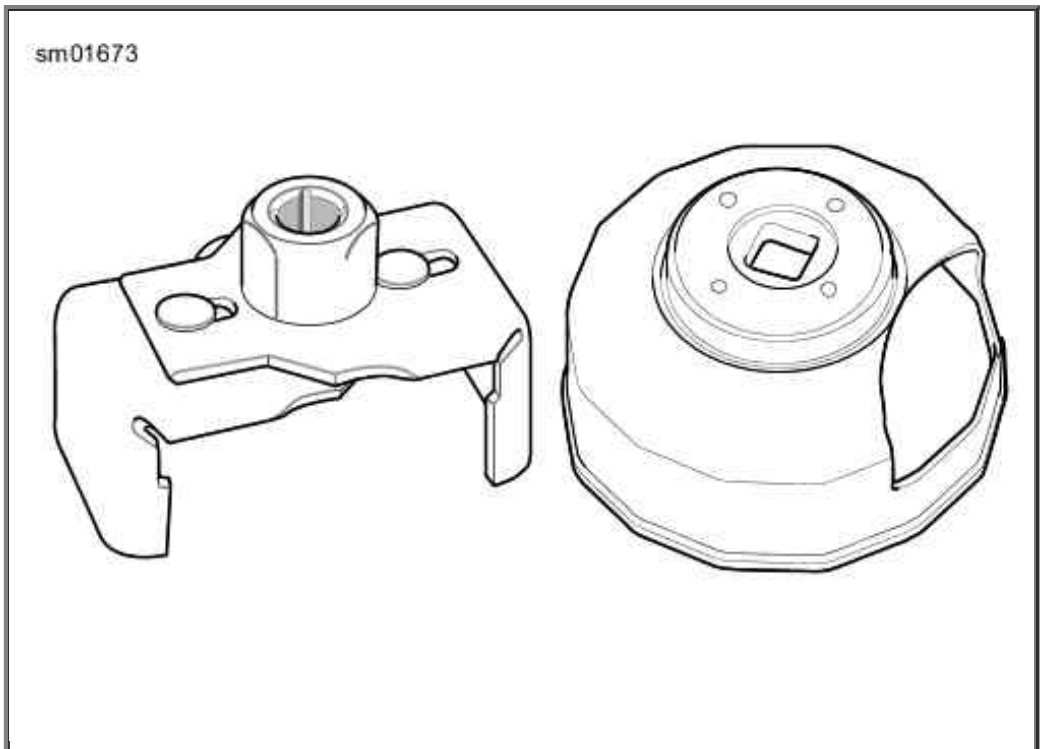

Oil Filter Wrenches

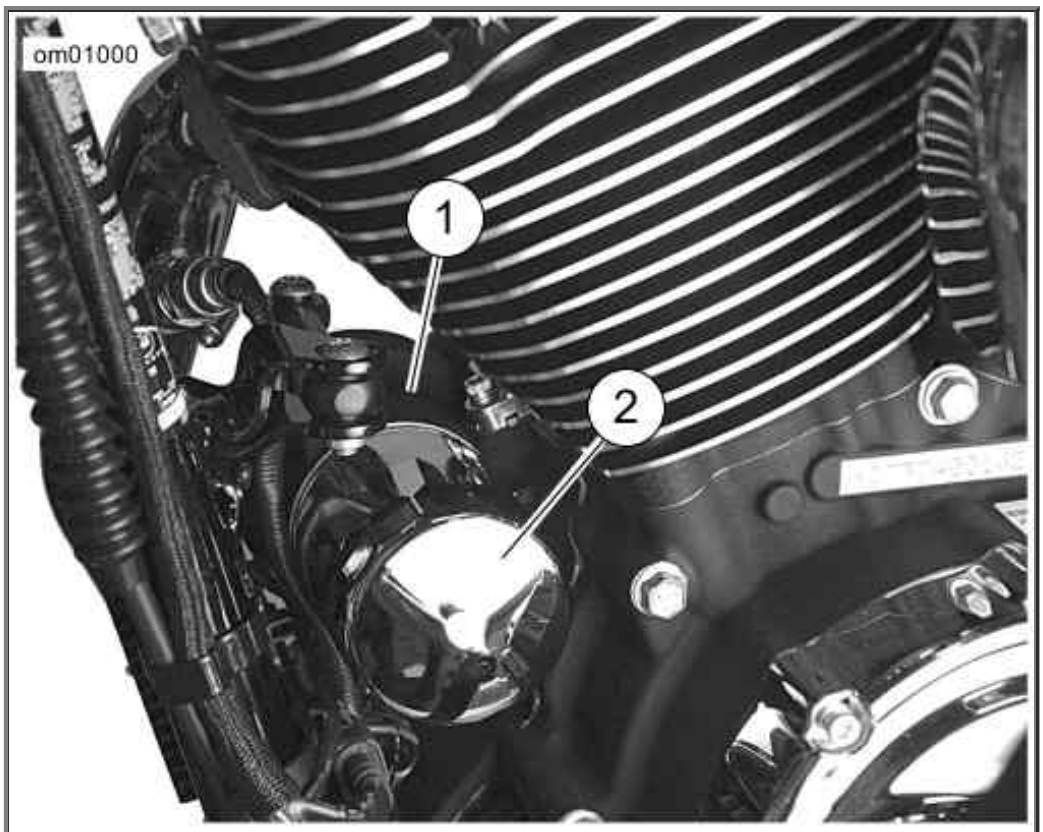

1. Crankcase
2. Oil filter

Oil Filter: Sportster Models (XL Model Shown)

Installing Oil Filter

CAUTION

Do not overfill oil tank. Doing so can result in oil carryover to the air cleaner leading to equipment damage and/or equipment malfunction. (00190a)

NOTE:

Partially fill oil filter before installation to minimize the time required for buildup of oil pressure when engine is first started.

1. Pour about 4 fl-oz 120 milliliters of fresh, clean engine oil into **new** oil filter. Allow time for oil to soak into filter element.

2. See Applying Thin Oil Film. Wipe filter gasket contact surface of oil filter mount with a clean cloth. Surface should be smooth and free of any debris or old gasket material.

3. Apply a thin film of oil to gasket contact surface on crankcase (3), gasket and **new** oil filter.

   NOTE:

   Do not use an oil filter wrench to install new oil filter.

4. Install **new** oil filter. Screw filter clockwise onto adapter until gasket contacts the filter mount surface. Then hand tighten an additional 1/2 to 3/4-turn to secure the oil filter.

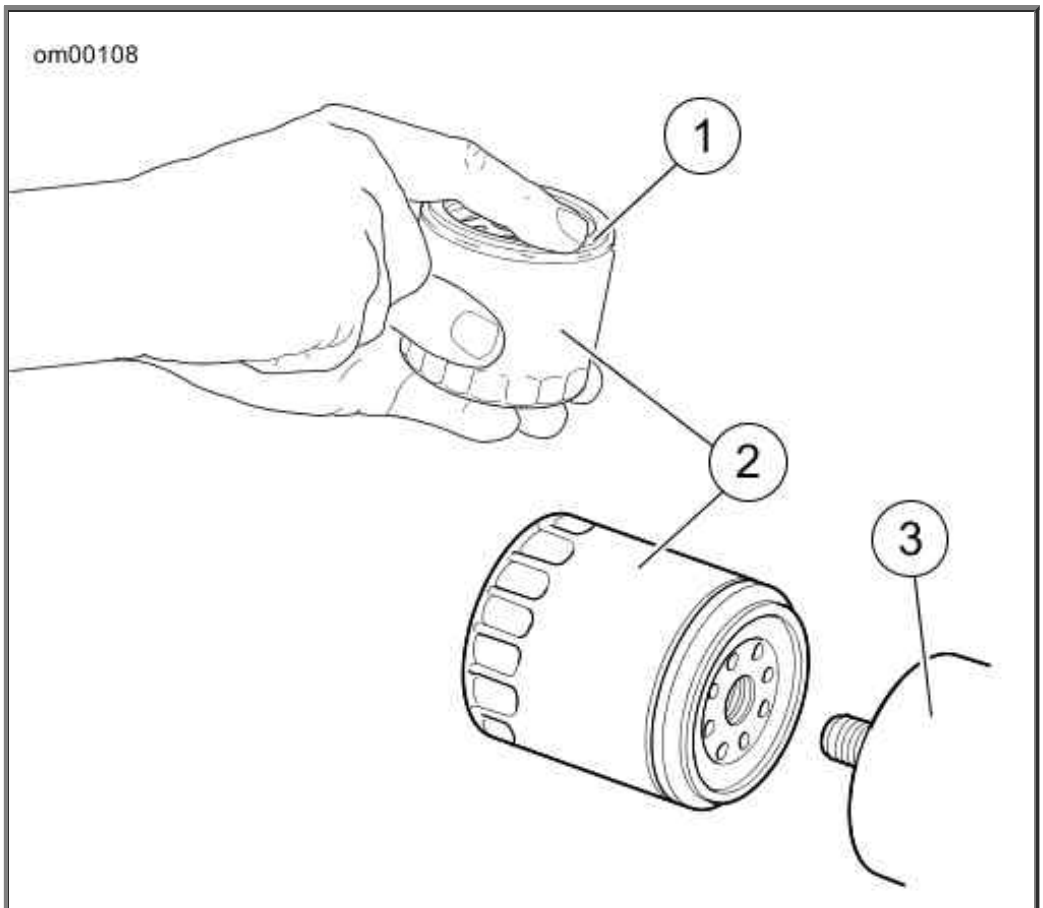

1. Thin oil film ONLY
2. Oil filter
3. Mounting plate

Applying Thin Oil Film

Refilling Oil Tank

CAUTION

Detach frame clip from frame tube. Loosen worm clamp and remove drain hose from frame clip. Allow a small amount of oil to flow from hose before reconnection. This action removes air from the drain hose and reduces the possibility of oil pump cavitation. (00355a)

1. Refer to Recommended Engine Oils. Pour 2.8 U.S. quarts 2.65 liters into engine oil tank minus the 4 fluid ounces 120 milliliters already added in the oil filter. Always use the proper grade of oil for the lowest expected air temperature before the next regularly scheduled oil change.
2. Install filler cap/dipstick in oil tank. Make sure cap is fully seated.
3. Start engine. Verify that oil pressure signal light turns off when engine speed is 1000 RPM or above. Turn engine off.
4. Check for oil leaks at oil filter and oil tank drain hose. Check engine oil.

Winter Lubrication

In colder climates, the engine oil should be changed often. If motorcycle is used frequently for short trips, less than 15 miles 24 kilometers , in ambient temperatures below 60° F 16° C , oil change intervals should be reduced to 1500 miles 2400 kilometers . Motorcycles used only for short runs must have a thorough tank flush-out before **new** oil is put in. The tank flush-out should be performed by an authorized dealer or qualified technician.

NOTE:

The further below freezing the temperature drops, the shorter the oil change interval should be.

Water vapor is a normal by-product of combustion in any engine. During cold weather operation, some of the water vapor condenses to liquid form on the cool metal surfaces inside the engine. In freezing weather this water will become slush or ice and, if allowed to accumulate too long, may block the oil lines and cause damage to the engine.

If the engine is run frequently and allowed to thoroughly warm up, most of this water will become vapor again and will be blown out through the crankcase breather.

If the engine is not run frequently and allowed to thoroughly warm up, this water will accumulate, mix with the engine oil and form a sludge that is harmful to the engine.

Transmission Lubrication: Sportster Models

Refer to Regular Service Intervals: 2008 Sportster Models. The transmission should be drained and refilled with fresh lubricant at proper intervals. For best results, drain lubricant while hot.

NOTE:

When checking the transmission lubricant level, motorcycle should be standing STRAIGHT UP, not leaning on the jiffy stand. Keep motorcycle upright for a short period of time to equalize lubricant level in the transmission compartments.

CAUTION

When draining or adding lubricant, do not allow dirt, debris or other contaminants to enter the engine. (00198a)

⚠WARNING

Be sure that no lubricants or fluids get on tires, wheels or brakes when changing fluid. Traction can be adversely affected, which could result in loss of control of the motorcycle and death or serious injury. (00047d)

CAUTION

Do not overfill the primary chaincase with lubricant. Overfilling can cause rough clutch engagement, incomplete disengagement, clutch drag and/or difficulty in finding neutral at engine idle. (00199b)

Check Lubricant Level

1. Ride motorcycle until engine is warmed up to normal operating temperature.
2. Position motorcycle straight up.

⚠WARNING

To prevent accidental vehicle start-up, which could cause death or serious injury, remove main fuse before proceeding. (00251b)

3. Remove main fuse. See Electrical Protection: Sportster Models.
4. See Mid-Mount Rider Footrest Assembly: XL Models. For XL models equipped with mid-mount foot controls, remove screws and detach the rider footrest support bracket from the left side of the vehicle.
5. See Rider Footrest Assembly (Left Side): XR 1200 Model. For XR 1200 model, remove screws and detach the rider footrest support bracket from the left side of the vehicle. With the shift linkage still attached, lower the footrest assembly to access the clutch inspection cover screws.
6. See Primary Cover: Sportster Models (XL Model Shown). Remove screws with washers from clutch inspection cover. Remove clutch inspection cover from primary cover.

   NOTE:

   The filler access is the clutch inspection cover.

7. See Chaincase Lubricant Level: Sportster Models. Verify that lubricant level is even

with bottom of clutch diaphragm spring.

NOTE:

Add only enough of GENUINE Harley-Davidson FORMULA+ TRANSMISSION AND PRIMARY CHAINCASE LUBRICANT (Part No. 98851-05 quart) through clutch inspection cover opening until the lubricant reaches the bottom of clutch diaphragm spring.

8. Install **new** quad ring. Verify that quad ring is fully seated in groove of primary cover. Install clutch inspection cover and secure with six screws. Tighten screws in a crosswise pattern to 84-108 in-lbs (9.5-12.2 Nm).

9. If the left footrest assembly was removed, install support bracket with two screws. Tighten screws to 45-50 ft-lbs (61.0-67.8 Nm).

10. Install main fuse.

11. Start engine. Check for any lubricant leaks.

12. Turn engine off.

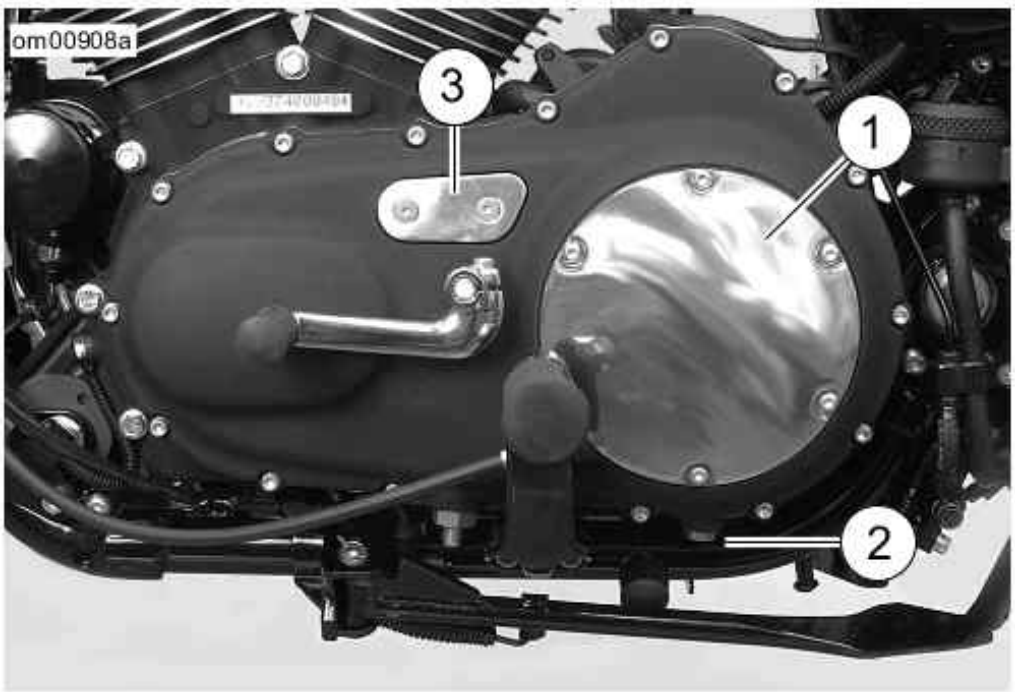

1. Clutch inspection cover
2. Drain plug
3. Primary chain inspection cover

Primary Cover: Sportster Models (XL Model Shown)

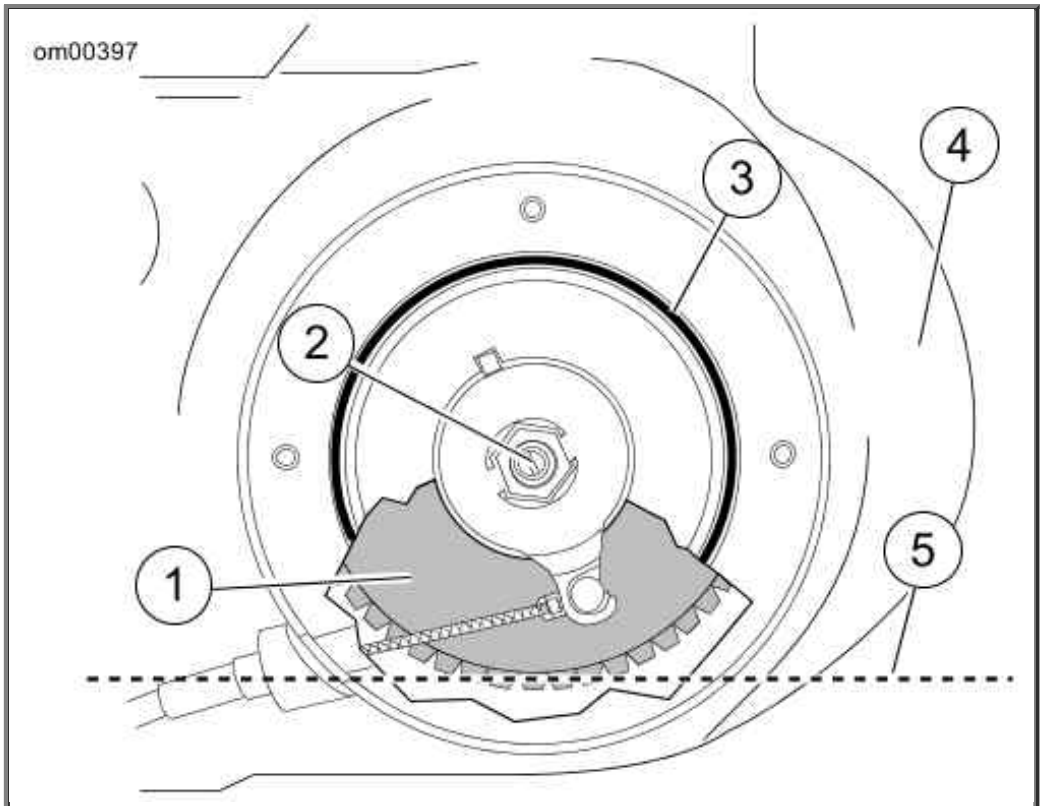

1. Clutch diaphragm spring
2. Clutch adjusting screw
3. Quad-ring
4. Primary cover
5. Chaincase lubricant level

Chaincase Lubricant Level: Sportster Models

Changing Lubricant

1. Ride motorcycle until engine is warmed up to normal operating temperature.
2. When the engine reaches normal operating temperature, turn the engine off and position motorcycle on jiffy stand. This will allow the chaincase lubricant to drain out of transmission.

⚠WARNING

To prevent accidental vehicle start-up, which could cause death or serious injury, remove main fuse before proceeding. (00251b)

3. Remove main fuse. See Electrical Protection: Sportster Models.
4. See Primary Cover: Sportster Models (XL Model Shown). Position a suitable container under transmission drain plug (2).
5. The drain plug is located under the clutch, on the underside of the chaincase. Remove drain plug and drain lubricant.
6. Position the motorcycle STRAIGHT UP and LEVEL. This allows additional fluid to be drained from clutch compartment.

NOTE:

Dispose of lubricant in accordance with local regulations.

CAUTION

Do not over-tighten filler or drain plug. Doing so could result in a lubricant leak. (00200b)

7. Remove foreign material from magnetic drain plug. Install drain plug and tighten to 14-30 ft-lbs (19.0-40.7 Nm).

8. See Mid-Mount Rider Footrest Assembly: XL Models. For XL models equipped with mid-mount foot controls, remove screws and detach the rider footrest support bracket from the left side of the vehicle.

9. See Rider Footrest Assembly (Left Side): XR 1200 Model. For XR 1200 model, remove screws and detach the rider footrest support bracket from the left side of the vehicle. With the shift linkage still attached, lower the footrest assembly to access the clutch inspection cover screws.

10. See Primary Cover: Sportster Models (XL Model Shown). Remove screws with washers from clutch inspection cover. Remove clutch inspection cover from primary cover.

    NOTE:

    The filler access is the clutch inspection cover.

11. Add 32 fluid ounces 946 milliliters of GENUINE Harley-Davidson FORMULA+ TRANSMISSION AND PRIMARY CHAINCASE LUBRICANT (Part No. 98851-05 quart) through clutch inspection cover opening.

12. Install **new** quad ring. Verify that quad ring is fully seated in groove of primary cover. Install clutch inspection cover and secure with six screws. Tighten screws in a crosswise pattern to 84-108 in-lbs (9.5-12.2 Nm).

13. If the left footrest assembly was removed, install support bracket with two screws. Tighten screws to 45-50 ft-lbs (61.0-67.8 Nm).

14. Install main fuse.

15. Start engine. Check for any lubricant leaks.

16. Turn engine off.

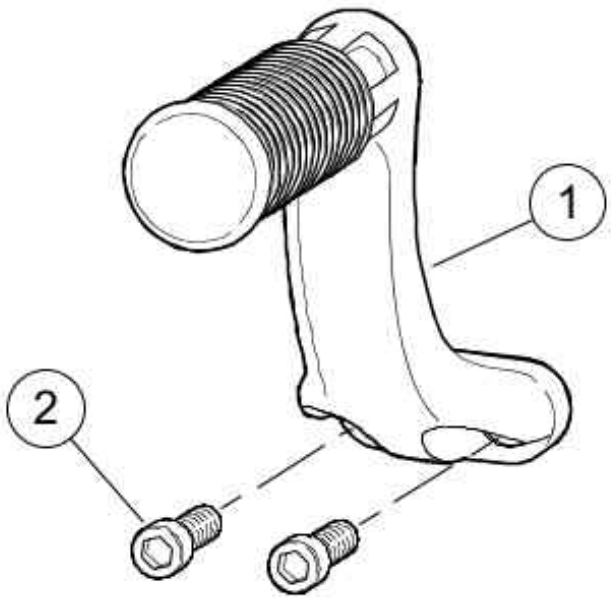

1. Support bracket
2. Screws (2)

Mid-Mount Rider Footrest Assembly: XL Models

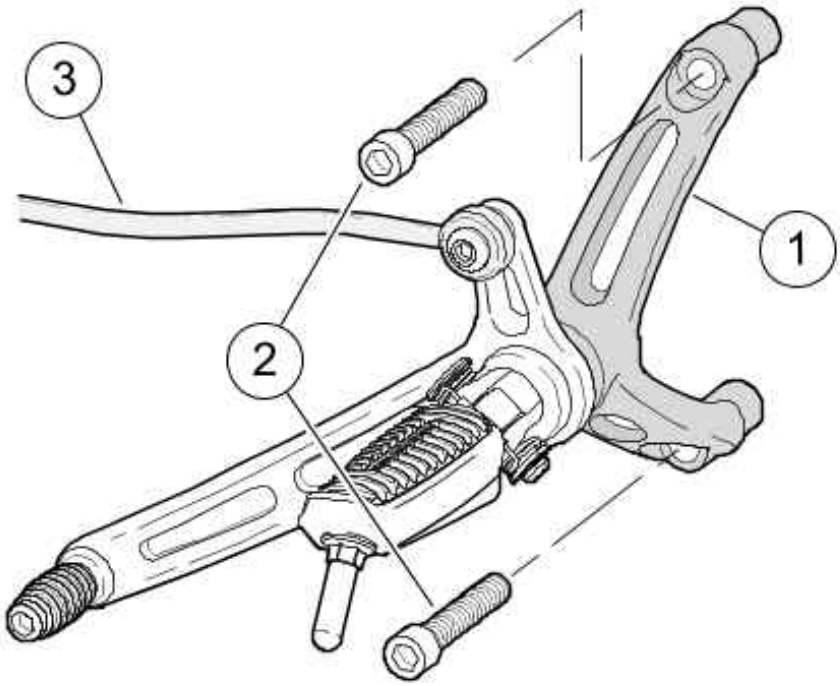

1. Rider footrest support bracket
2. Screws (2)
3. Shift linkage

Rider Footrest Assembly (Left Side): XR 1200 Model

Primary Chain Adjustment: Sportster Models

General

Refer to Regular Service Intervals: 2008 Sportster Models. Primary (front) chain adjustment should be checked at proper intervals and serviced as necessary. If the chain is allowed to run loose, it will cause the motorcycle to jerk when running at low speed, and chain and sprockets will wear excessively. If this happens, see a Harley-Davidson dealer or Service Manual for adjustment procedure.

Primary Chain Adjustment: Sportster Models

FREE PLAY	INCHES	MILLIMETERS
COLD engine	3/8-1/2	9.5-12.7
HOT engine	1/4-3/8	6.3-9.5

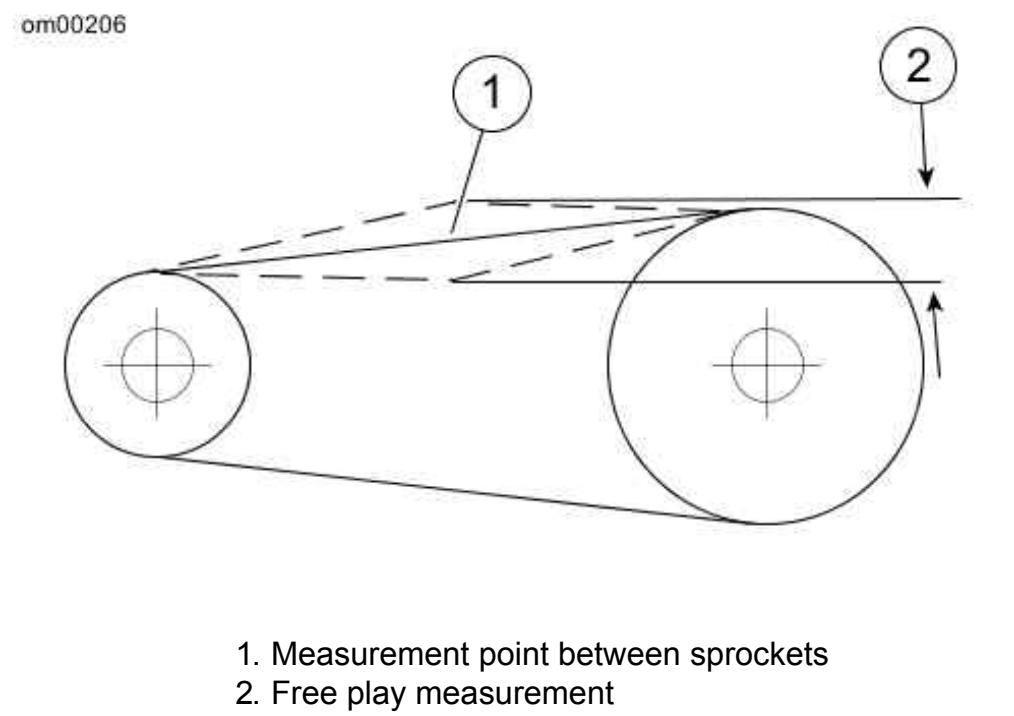

1. Measurement point between sprockets
2. Free play measurement

Primary Chain Vertical Free Play: Sportster Models

Procedure

The primary chain can be adjusted without removing the primary cover.

⚠WARNING

To prevent accidental vehicle start-up, which could cause death or serious injury, remove main fuse before proceeding. (00251b)

1. Remove main fuse. See Electrical Protection: Sportster Models.
2. See Primary Cover: Sportster Models (XL Model Shown). Remove the two hex

socket screws which secure primary chain inspection cover (3).

3. Rotate sprockets to find tightest point on primary chain.

CAUTION

Do not adjust the primary chain tighter than specified. Running chain too tight will result in excessive wear. (00202a)

4. See Primary Chain Adjuster: Sportster Models. Loosen locknut (1).

5. Turn chain adjuster screw (2) clockwise (inward) to reduce free play or counterclockwise (outward) to increase free play. Vertical free play must fall within the limits specified. Refer to Primary Chain Adjustment: Sportster Models.

   NOTE:

   If vertical free play cannot be set within the limits specified, then primary chain and/or chain adjuster are worn beyond adjustment limits. Replace parts as necessary.

6. When tension is set correctly, hold chain adjusting screw and tighten locknut to 20-25 ft-lbs (27-34 Nm).

7. Install primary chain inspection cover. Tighten hex socket screws to 40-60 in-lbs (4.5-6.8 Nm).

8. Install main fuse.

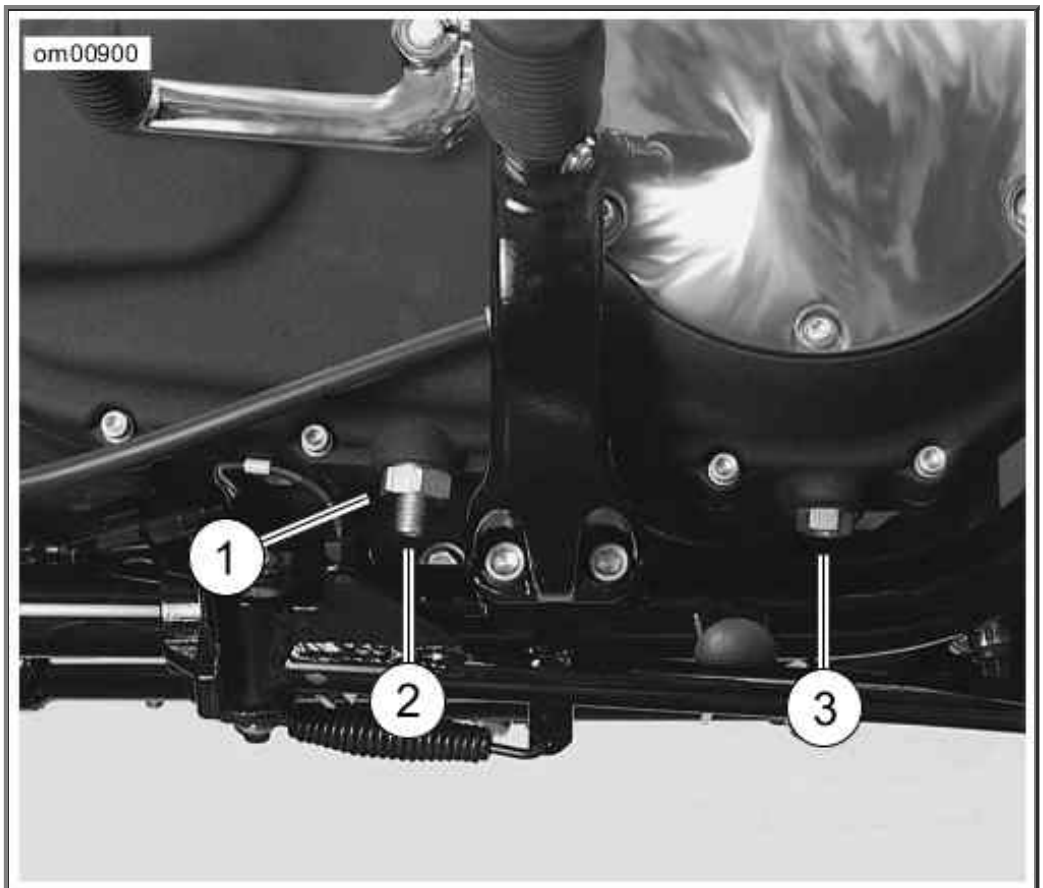

1. Locknut
2. Chain adjuster screw
3. Transmission chaincase drain plug

Primary Chain Adjuster: Sportster Models

Rear Drive Belt: Sportster Models

General

The inner tooth surface of the secondary belt has a thin coating of polyethylene lubricant. During initial operation, this coating will wear off as it is burnished into the belt fabric. This is a normal condition and not an indication of belt wear.

Belt tension is set at the factory and should be checked after the first 1000 miles 1600 kilometers , at scheduled maintenance intervals, and after a hard ride.

Gauging Deflection

Check belt deflection at the loosest spot in the belt with the transmission in neutral and the motorcycle at ambient temperature.

1. With the motorcycle unladen and resting on its jiffy stand, fit the BELT TENSION GAUGE HD-35381-A on the belt.

    a. See Gauging Belt Deflection: XR 1200 Model. On XR 1200 model, fit BELT TENSION GAUGE half-way between the idler wheel and rear sprocket.

    b. See Gauging Belt Deflection: Sportster XL Models. On all other models, position

the gauge half-way between the transmission and rear wheel sprockets.

2. With the BELT TENSION GAUGE set to 0 lbs. 0 kg , note the current belt position.

   a. See Belt Deflection: XR 1200 Model. On XR 1200 model, note the belt position according to the graduations on the front of the debris deflector.

   b. See Belt Deflection Window (typical). On all other models, note the belt position according to the graduations on the belt deflection window located on the rear drive belt guard.

3. Using the BELT TENSION GAUGE, apply 10 lbs. 4.5 kg of force to the bottom belt. Count the number of graduations between the original belt position and after applying the force. Multiply this number by 1/8 in. 3.2 mm to determine the deflection.

4. Refer to Belt Deflection: Sportster Models for the recommended deflection. If belt tension adjustment is necessary, see a Harley-Davidson dealer or follow the belt deflection adjustment procedure in the Service Manual.

⚠WARNING

Be sure wheel and brake caliper are aligned. Riding with a misaligned wheel or brake caliper can cause the brake disc to bind and lead to loss of control, which could result in death or serious injury. (00050a)

NOTE:

When gauging deflection, check the rear brake caliper position on rear brake disc. Disc should run true within brake caliper.

Belt Deflection: Sportster Models

MODELS	INCHES	MILLIMETERS
XL 883C, XL 883L, XL 1200C, XL 1200L, XL 1200N	1/4-5/16	6.4-7.9
XL 883, XL 883R, XL 1200R	9/16-5/8	14.3-15.9
XR 1200	1/4-3/8	6.4-9.5

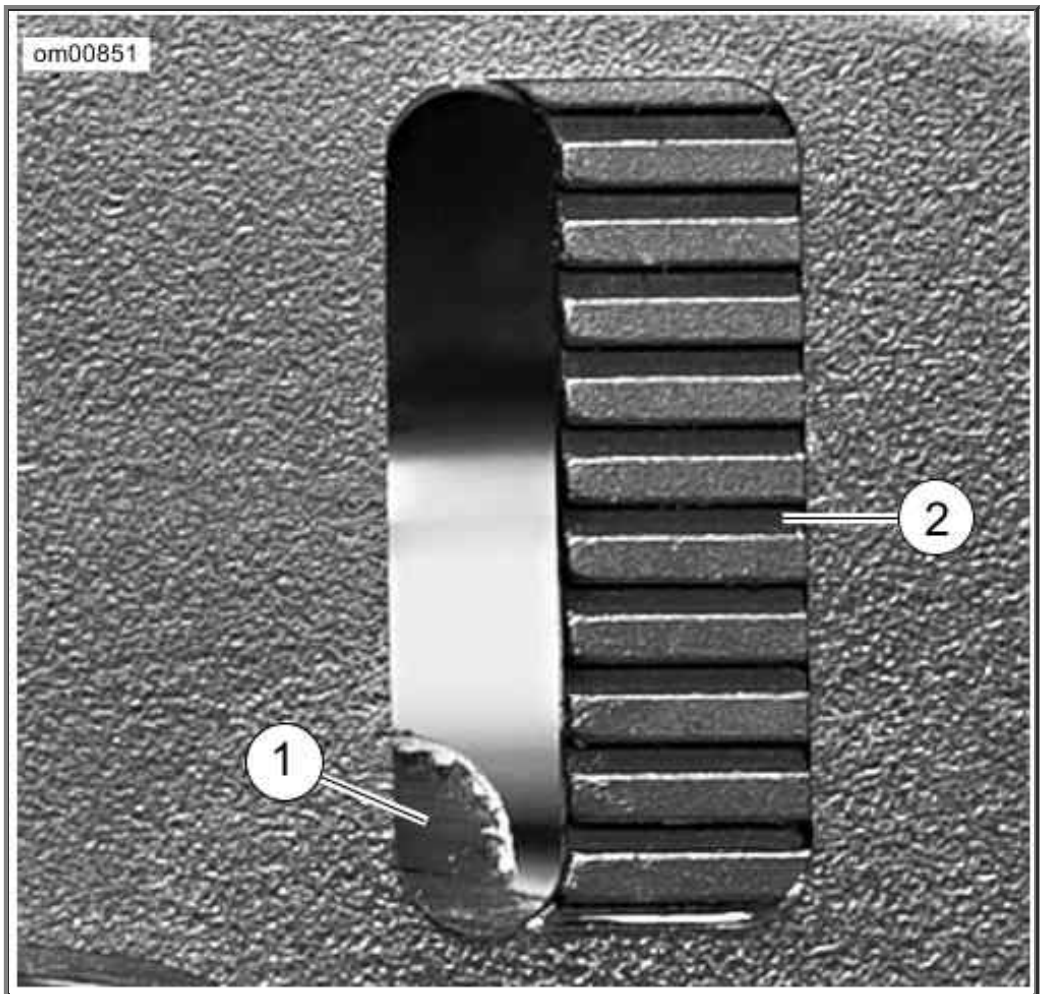

1. Rear drive belt
2. Deflection graduations 1/8 in. (3.2 mm) apart

Belt Deflection Window (typical)

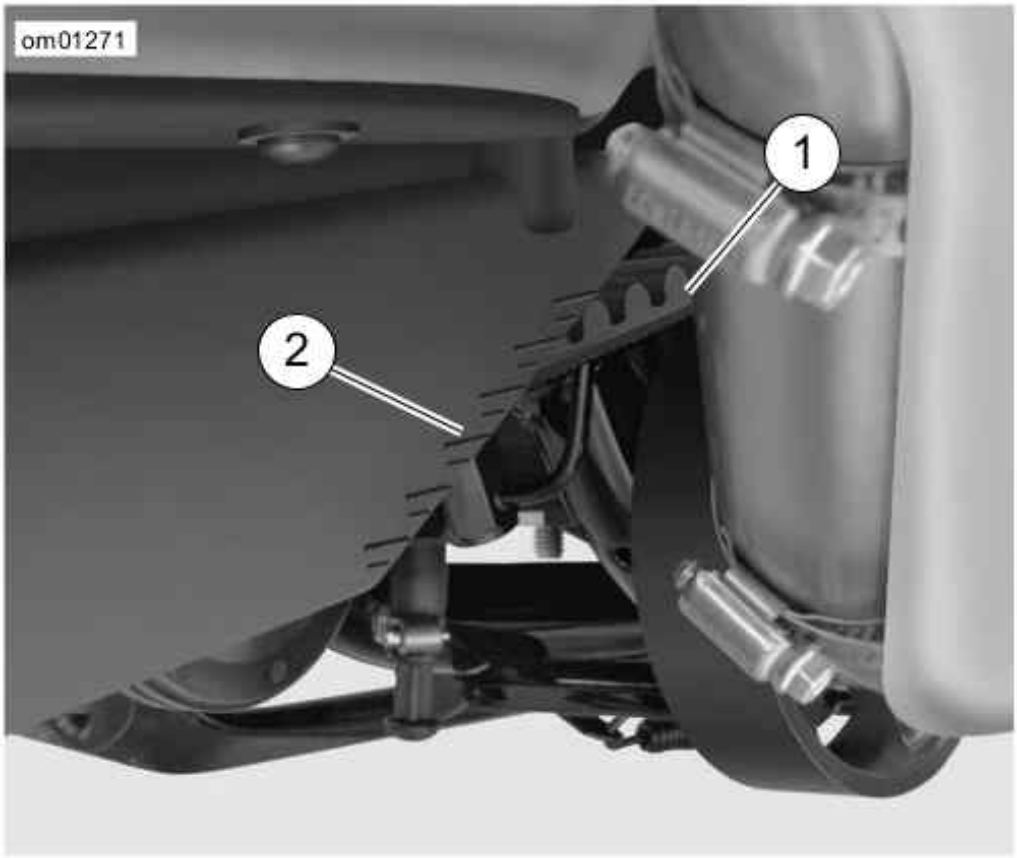

1. Rear drive belt
2. Deflection graduations 1/8 in. (3.2 mm) apart

Belt Deflection: XR 1200 Model

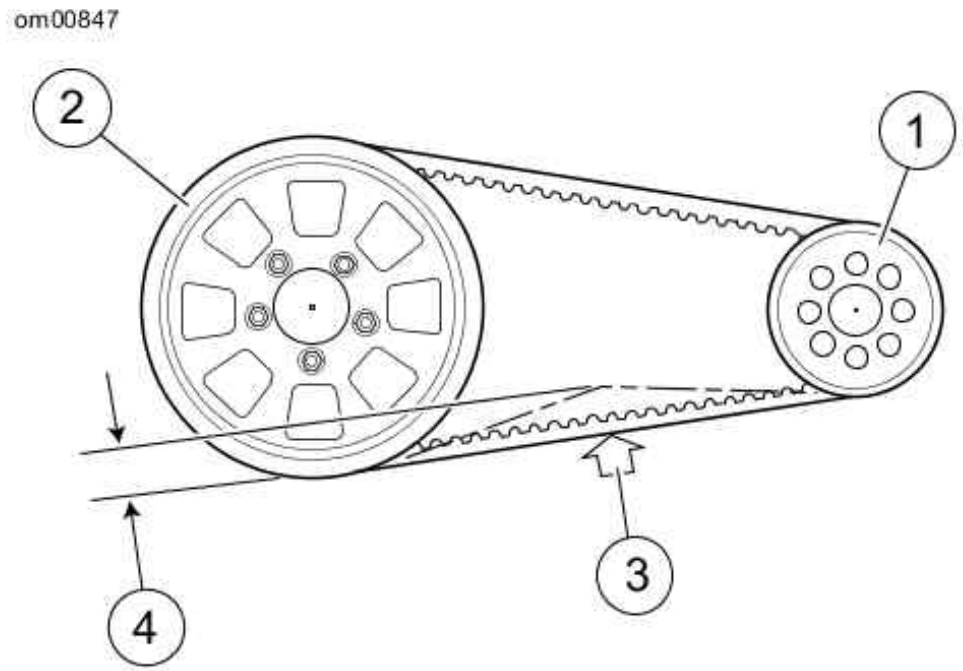

1. Transmission sprocket
2. Rear wheel sprocket
3. Force of 10 lbs (4.5 kg)
4. Deflection (refer to table)

Gauging Belt Deflection: Sportster XL Models

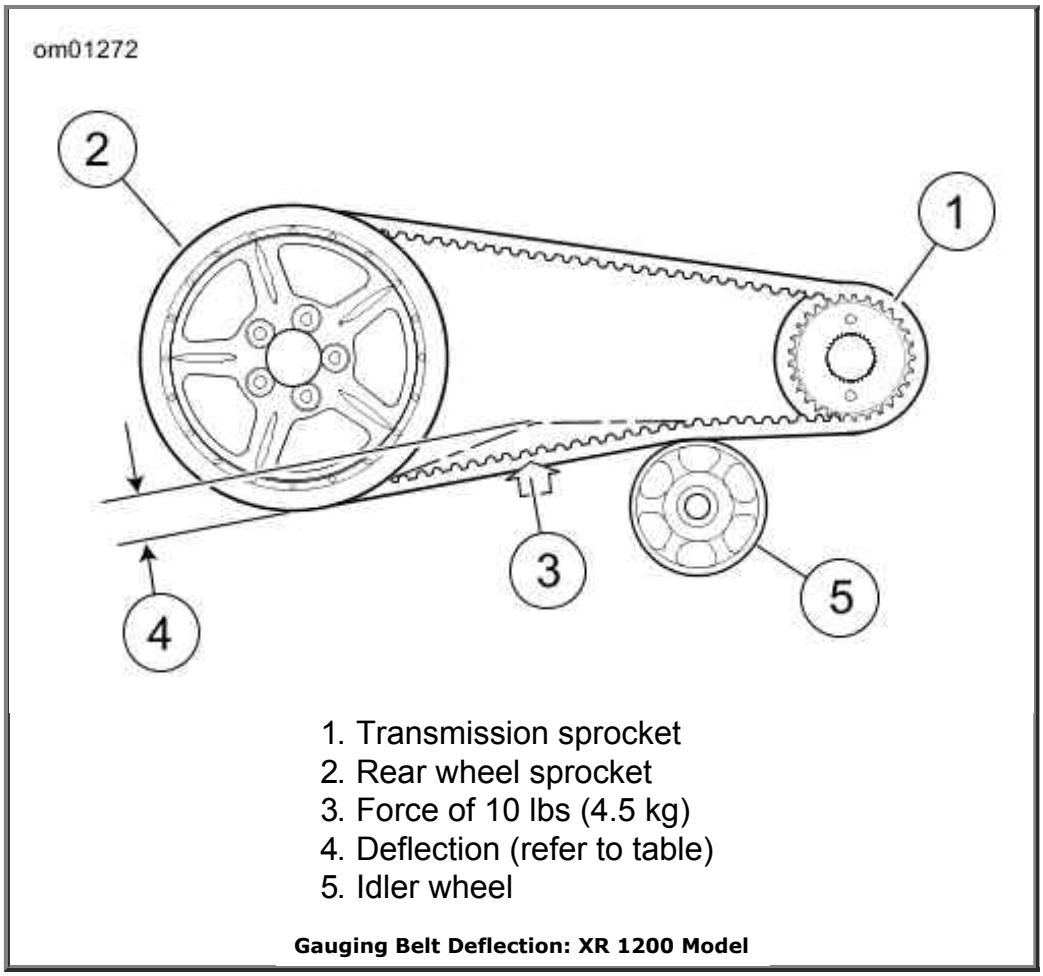

Gauging Belt Deflection: XR 1200 Model

Chassis Lubrication

Refer to Regular Service Intervals: 2008 Sportster Models for all maintenance schedules.

CAUTION

Do not switch lubricant brands indiscriminately because some lubricants interact chemically when mixed. Use of inferior lubricants can damage the engine. (00184a)

1. Use recommended special purpose grease for steering head bearings. Use a multipurpose chassis grease for other applications.
2. Remove and lubricate handlebar throttle control grip sleeve with fresh graphite at proper intervals.
3. Lubricate throttle control cables and clutch control cable at proper intervals.
4. Lubricate front brake hand lever and clutch control hand lever only if necessary.
5. Inspect rear fork pivot shaft bearings.
6. Pack the steering head bearings with fresh grease at proper intervals.
7. Lubricate the jiffy stand mechanism with LOCTITE AEROSOL ANTI-SEIZE at proper intervals.

NOTE:

For model specific information regarding the chassis lubrication, refer to the appropriate Service Manual or see a Harley-Davidson dealer.

Oil Applications

Refer to Regular Service Intervals: 2008 Sportster Models for all control connections and parts. Vehicle should be oiled at regular intervals, particularly after washing motorcycle or driving in wet weather.

Front Fork Oil

Refer to Regular Service Intervals: 2008 Sportster Models. Have a Harley-Davidson dealer drain the front fork oil and refill at proper intervals. If fork does not appear to be working properly or an appreciable amount of oil leakage should develop, see a Harley-Davidson dealer. If there is insufficient oil in either side of fork, the rebound action will be incorrect.

Clutch

CAUTION

The clutch control cable must be oiled and adjusted periodically to compensate for lining wear. See Service Interval Table. Failure to oil and adjust the clutch control cable can result in equipment damage. (00203a)

The need for attention to clutch and controls will be indicated by the clutch slipping under load or dragging when released. In this situation, check the control cable adjustment first. See a Harley-Davidson dealer for proper service.

Hydraulic Lifters

The hydraulic lifters are self-adjusting. They automatically adjust length to compensate for engine expansion and valve mechanism wear. This keeps the valve mechanism free of lash when the engine is running.

When starting an engine which has been turned off even for a few minutes, the valve mechanism may be slightly noisy until the hydraulic units completely refill with oil. If at any time the valve mechanism becomes abnormally noisy, other than for a short period immediately after engine is started, it is an indication that one or more of the hydraulic units may not be functioning properly.

Always check the oil supply in the oil tank first since normal circulation of oil through the engine is necessary for proper operation of the hydraulic units.

If there is oil in the tank, the units may not be functioning properly because of dirt in the oil supply passages leading to the lifter units. See a Harley-Davidson dealer for service.

Front Fork Bearings

⚠WARNING

Adjustments to front fork bearings should be performed by

a Harley-Davidson dealer. Improperly adjusted bearings can adversely affect handling and stability, which could result in death or serious injury. (00051a)

Refer to Regular Service Intervals: 2008 Sportster Models. Check front fork for proper bearing adjustment and lubricate bearings at proper intervals.

With motorcycle front end raised off the floor, be sure front fork turns freely without any binding or interference and that there is no appreciable front to rear fork shake indicating excessive bearing looseness. Steering head bearings should be adjusted according to Service Manual procedure, if necessary.

Rear Fork Pivot Shaft

Refer to Regular Service Intervals: 2008 Sportster Models. Check the tightness of the rear fork pivot shaft fastener at proper intervals.

NOTE:

For model specific information regarding the rear fork pivot shaft, refer to the appropriate Service Manual or see a Harley-Davidson dealer.

Brakes: Sportster Models

⚠WARNING

Inspect brake pads for wear at service maintenance intervals. If you ride under adverse conditions (steep hills, heavy traffic, etc.), inspect more frequently. Excessively worn brake pads can lead to brake failure, which could result in death or serious injury. (00052a)

1. Refer to Regular Service Intervals: 2008 Sportster Models. Check brake pads and brake discs for wear at proper intervals.
2. Check the fluid level in the master cylinder reservoirs at regular intervals.
3. If level is low, clean dirt and debris from reservoir cover before removing.

⚠CAUTION

Direct contact of D.O.T. 4 brake fluid with eyes can cause irritation. Avoid eye contact. In case of eye contact flush with large amounts of water and get medical attention. Swallowing large amounts of D.O.T. 4 brake fluid can cause digestive discomfort. If swallowed, obtain medical attention. Use in well ventilated area. KEEP OUT OF REACH OF CHILDREN. (00240a)

4. Add D.O.T. 4 HYDRAULIC BRAKE FLUID (Part No. 99953-99A) if necessary.

   NOTE:

Use only D.O.T. 4 HYDRAULIC BRAKE FLUID (Part No. 99953-99A) approved for brake system use and available from a Harley-Davidson dealer. Replace D.O.T. 4 HYDRAULIC BRAKE FLUID every 2 years.

5. Replace brake rubber components on master cylinders and calipers.
6. Lubricate brake caliper pins at regular intervals.

⚠WARNING

Always replace brake pads in complete sets for correct and safe brake operation. Improper brake operation could result in death or serious injury. (00111a)

Harley-Davidson has provided your new motorcycle with the optimum brake pad friction material available. It is selected to give the best performance possible under dry, wet and high operating temperature conditions. It exceeds all regulatory requirements currently in effect. However, during some braking conditions you may experience noise. This is normal for this friction material.

⚠WARNING

Brakes are a critical safety component. Contact a Harley-Davidson dealer for brake repair or replacement. Improperly serviced brakes can adversely affect brake performance, which could result in death or serious injury. (00054a)

Visual inspection of brake pads can be made without removing the caliper. View the lower area of each caliper with a flashlight.

⚠WARNING

Perform routine scheduled brake maintenance. Lack of maintenance at recommended intervals can adversely affect brake performance, which could result in death or serious injury. (00055a)

NOTES:

- *If the brake pad friction material is 0.04 inch 1.00 millimeter thick or less, the pads must be replaced immediately.*
- *Always replace brake pads in pairs.*

The rear brake outer pad on all models can be measured from the caliper bracket side using a thin plastic 6.0 inch 152.4 millimeter rule. Place the rule against the brake disc through the space alongside the caliper.

NOTE:

The outer surface of the brake pad backing plate should measure 0.04 inch 1.00 millimeter or more away from the brake disc.

Tires

See Specifications: 2008 Sportster Models for tire pressures and sizes.

- Be sure to keep tires properly inflated.
- Follow tire data for correct cold tire inflation pressures.
- Check before riding when tires are cold.
- Do not over-inflate tires.

⚠WARNING

Do not inflate tire beyond maximum pressure as specified on sidewall. Over inflated tires can blow out, which could result in death or serious injury. (00027a)

⚠WARNING

Match tires, tubes, air valves and caps to the correct wheel rim. Contact a Harley-Davidson dealer. Mismatching can result in damage to the tire bead, allow tire slippage on the rim or cause tire failure, which could result in death or serious injury. (00023a)

Check inflation pressure and inspect tread for punctures, cuts, breaks, etc., at least weekly if in daily use. Check before each trip if used occasionally.

⚠WARNING

Be sure tires are properly inflated, balanced and have adequate tread. Inspect your tires regularly and see a Harley-Davidson dealer for replacements. Riding with excessively worn, unbalanced or under-inflated tires can adversely affect stability and handling, which could result in death or serious injury. (00014a)

Same as original equipment tires should be used. Other tires may not fit correctly, could adversely affect handling, and may be hazardous to use.

⚠WARNING

Tires are a critical safety component. Contact a Harley-Davidson dealer for tire repair or replacement. Improper tire service can adversely affect stability and handling, which could result in death or serious injury. (00057a)

⚠WARNING

Replace punctured or damaged tires. In some cases, small punctures in the tread area may be repaired from within the demounted tire by a Harley-Davidson dealer. Speed should NOT exceed 50 mph (80 km/h) for the first 24 hours after repair, and the repaired tire should NEVER be used

over 80 mph (130 km/h). Failure to follow this warning could result in death or serious injury. (00015a)

⚠WARNING

Striking an object, such as a curb, can cause internal tire damage. If an object is struck, remove and inspect both the inside and outside of the tire. A damaged tire can adversely affect stability and handling, which could result in death or serious injury. (00058a)

Tire Replacement: Sportster Models

Inspection

⚠WARNING

Harley-Davidson tires are equipped with wear bars that run horizontally across the tread. When wear bars become visible and only 1/32 in. (0.8 mm) tread depth remains, replace tire immediately. Using a worn tire can adversely affect stability and handling, which could result in death or serious injury. Use only Harley-Davidson approved replacement tires. (00090b)

See Tire Sidewall Wear Bar Locator: XL Models (XL models) or Tread Wear Indicator: XR 1200 Model (XR 1200). Arrows on tire sidewalls pinpoint location of wear bar indicators.

Tread wear indicator bars will appear on tire tread surfaces when 1/32 in. 0.8 mm or less of tire tread remains. See Wear Bar Appearance: XL Models. Always replace tires before the tread wear indicator bars appear.

When To Replace Tires

New tires are needed if any of the following conditions exist:

1. Tread wear indicator bars become visible on the tread surfaces.
2. Tire cords or fabric become visible through cracked sidewalls, snags or deep cuts.
3. A bump, bulge or split in the tire.
4. Puncture, cut or other damage to the tire that cannot be repaired.

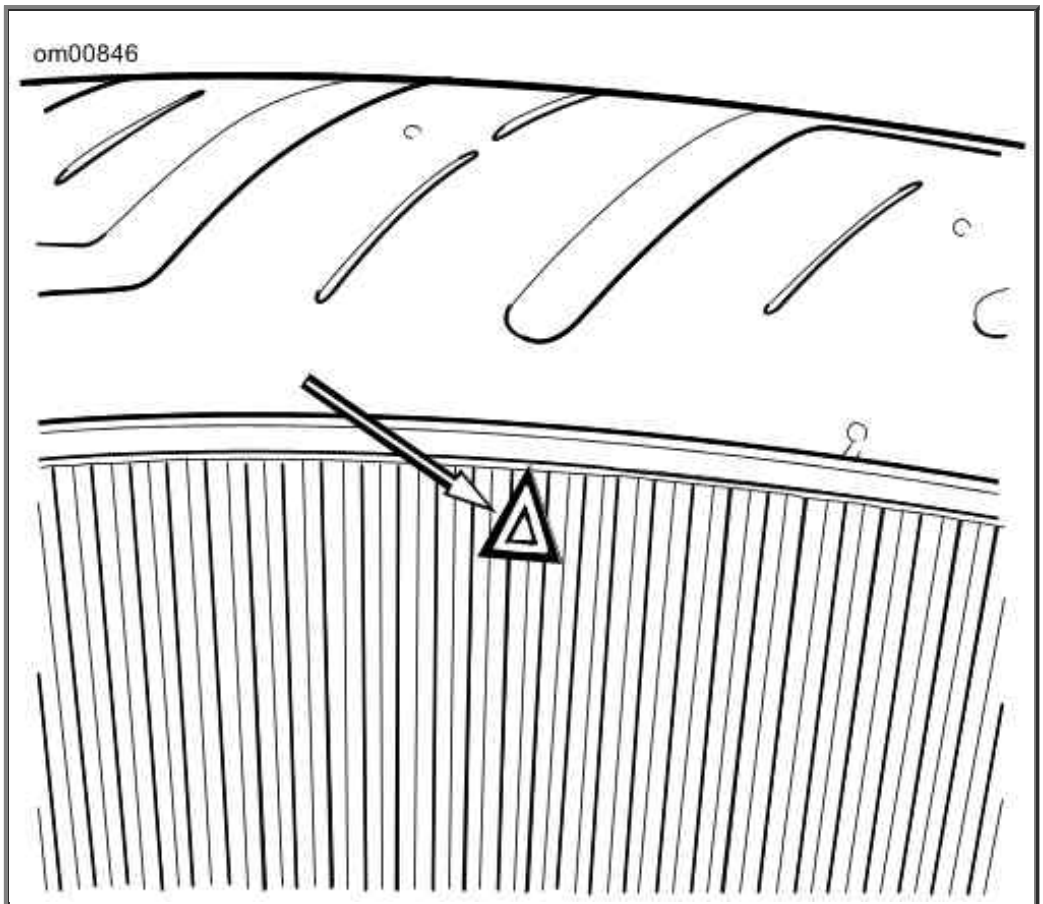

Tire Sidewall Wear Bar Locator: XL Models

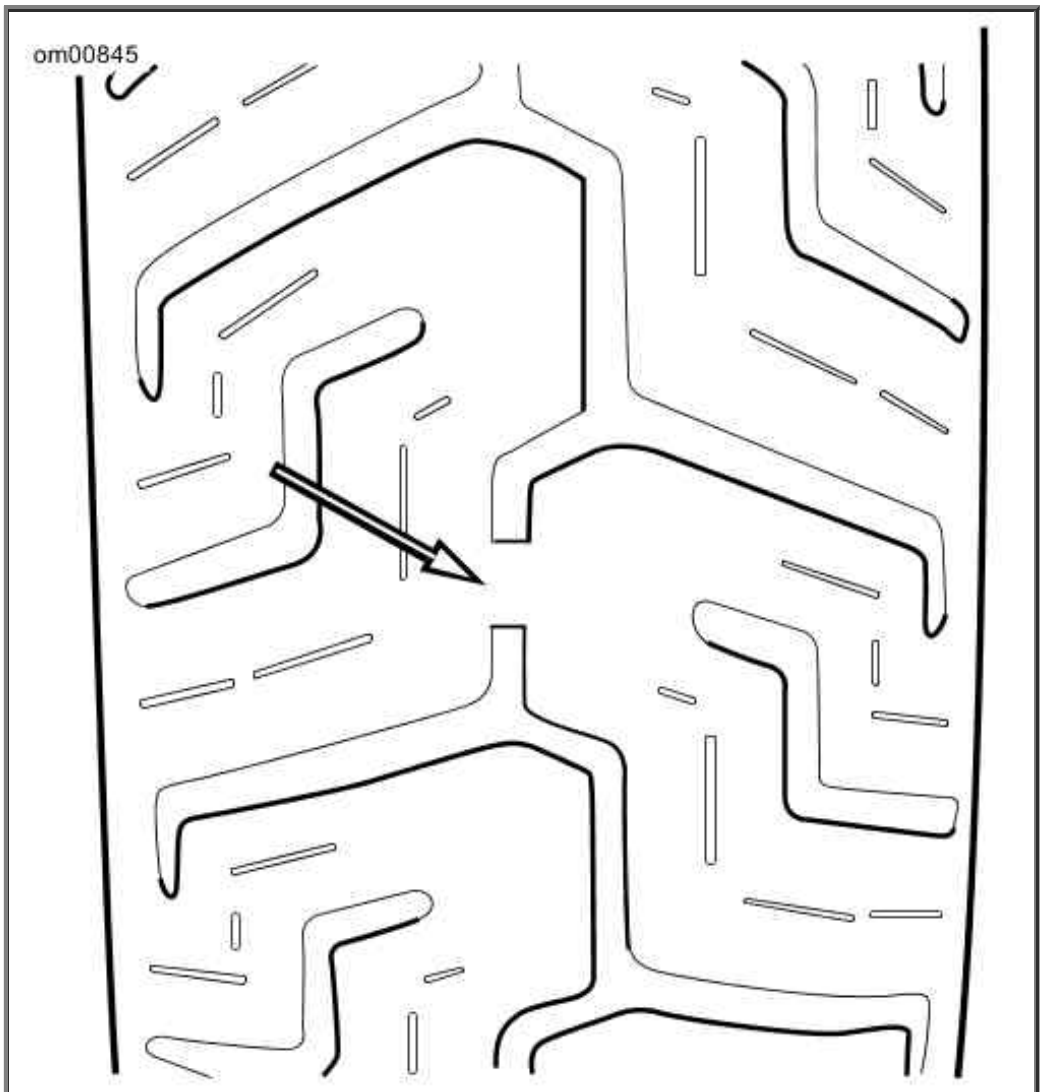

Wear Bar Appearance: XL Models

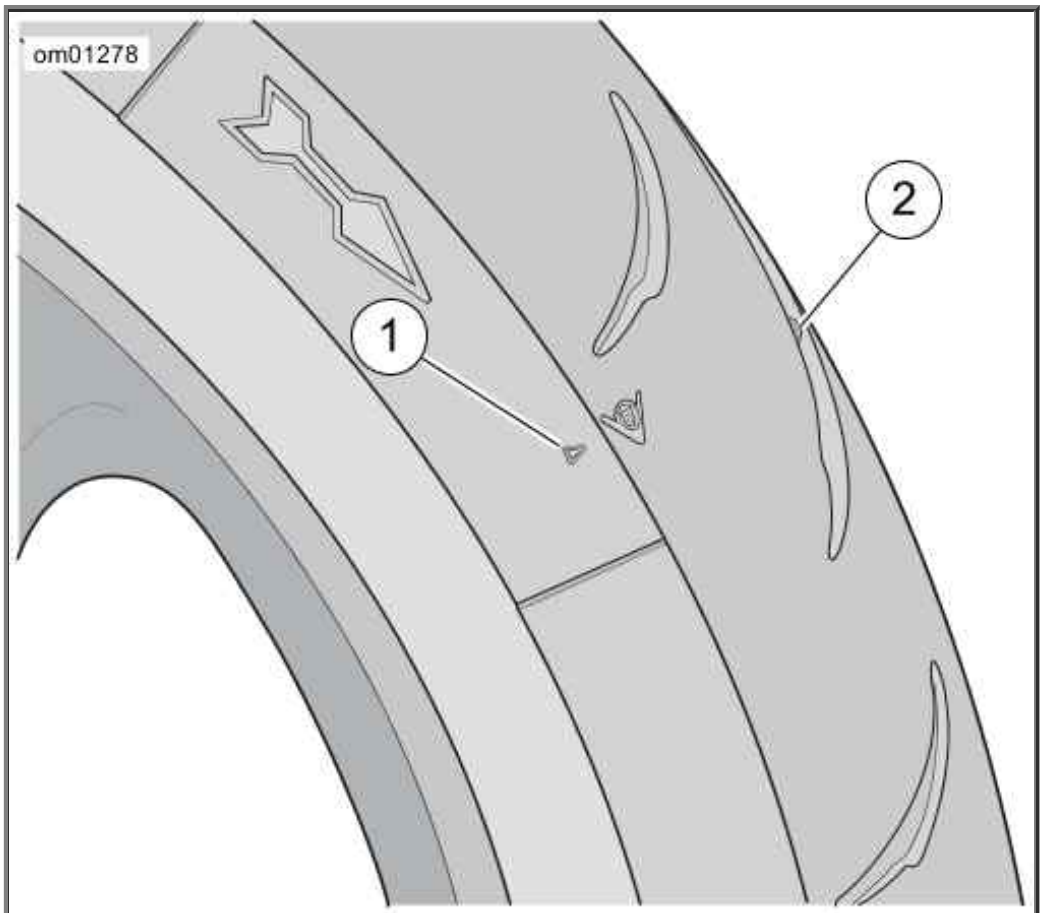

1. Sidewall locator
2. Tread wear indicator

Tread Wear Indicator: XR 1200 Model

Shock Absorbers

Refer to Regular Service Intervals: 2008 Sportster Models. Inspect shock absorbers and rubber bushings for leaks and bushing deterioration at proper intervals.

Spark Plugs

Refer to Regular Service Intervals: 2008 Sportster Models. Check the spark plugs at proper intervals.

⚠CAUTION

Do NOT pull on any electrical wires. Pulling on electrical wires may damage the internal conductor causing high resistance, which may result in minor or moderate injury. (00168a)

Disconnect spark plug cables from plugs by pulling on the molded connector caps. To reconnect, simply snap-on spark plug cables to tops of spark plugs.

Refer to Ignition System: 2008 Sportster XL Models before servicing spark plugs.

1. Check spark plug type. Only use those spark plugs specified for your model motorcycle.

2. Check spark plug gap against table specifications.
3. Always tighten to the proper torque. Spark plugs must be tightened to the torque specified for proper heat transfer.

NOTE:

If a torque wrench is not available, tighten plugs finger tight and then tighten an additional one quarter turn with a spark plug wrench.

Ignition

The engine in your motorcycle has been designed specifically to achieve optimum fuel economy within exhaust emission controls. Factory programmed ignition characteristics provide maximum engine performance and driveability.

Air Cleaner: Sportster Models

XR Model

Refer to Regular Service Intervals: 2008 Sportster Models. For XR 1200 model, see a Harley-Davidson dealer at specified intervals for filter element inspection or replacement. Under dusty conditions, have the filter inspected more often.

XL Models

Refer to Regular Service Intervals: 2008 Sportster Models. For XL models, remove air cleaner cover and inspect filter element at proper intervals. Under dusty conditions, inspect more often.

See Air Cleaner Assembly: Sportster XL Models. The paper/wire mesh air filter element should be washed in luke warm water with a mild detergent.

Install baseplate gasket, air filter element, and bracket if removed. Tighten screws to 40-60 in-lbs (4.5-6.8 Nm).

When installing air cleaner cover, apply a drop of LOCTITE THREADLOCKER 243 (blue) to the threads of the cover screw and tighten to 36-60 in-lbs (4.1-6.8 Nm).

⚠WARNING

Compressed air can pierce the skin and flying debris from compressed air could cause serious eye injury. Wear safety glasses when working with compressed air. Never use your hand to check for air leaks or to determine air flow rates. (00061a)

- Allow filter to either air dry or blow it dry, from the inside, with low pressure air.
- Do not use an air cleaner filter oil on the Harley-Davidson paper/wire mesh air filter element.

CAUTION

Install air filter before running engine. Failure to do so can draw debris into the engine and could result in engine damage. (00207a)

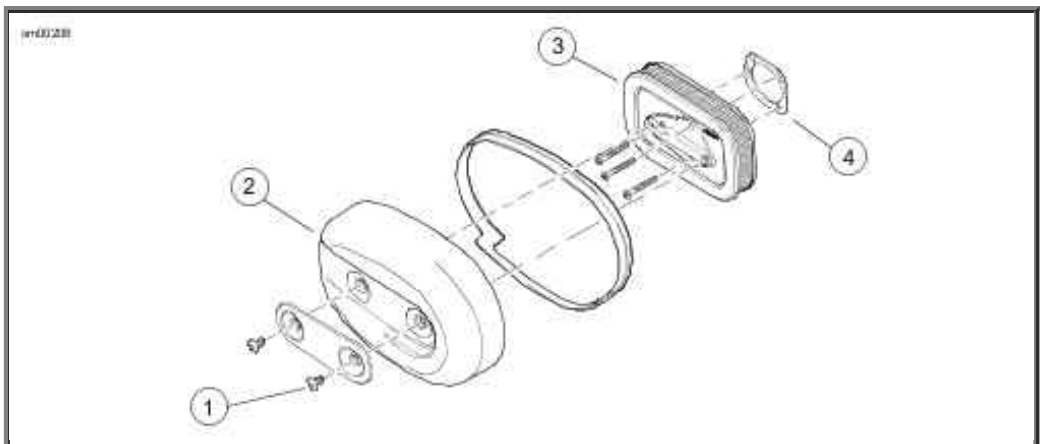

1. Screw
2. Cover
3. Filter element
4. Gasket

Air Cleaner Assembly: Sportster XL Models

Headlamp

See Headlamp Assemblies: Sportster Models. The headlamp assembly uses replaceable quartz halogen bulb(s).

NOTE:

Refer to Bulb Chart: 2008 Sportster Models and see a service manual for more details.

CAUTION

When replacement is required, use only the specified sealed beam unit or bulb, available from a Harley-Davidson dealer. An improper wattage sealed beam or bulb, can cause charging system problems. (00209a)

CAUTION

Never touch the quartz bulb. Fingerprints will etch the glass and decrease bulb life. Grab the bulb with paper or a clean, dry cloth. Failure to do so could result in bulb damage. (00210a)

⚠WARNING

Handle bulb carefully and wear eye protection. Bulb contains gas under pressure, which, if not handled carefully, could cause serious eye injury. (00062b)

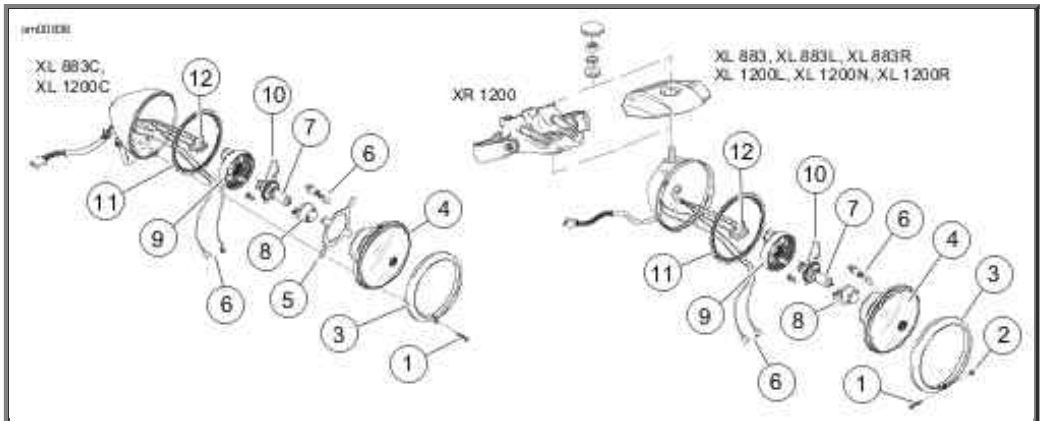

1. Screw
2. Nut
3. Headlamp ring
4. Lens
5. Gasket
6. Position lamp (world models only)
7. Bulb
8. Bulb shield
9. Rubber boot
10. Wire clip
11. Adapter ring
12. Connector

Headlamp Assemblies: Sportster Models

Headlamp Alignment: Sportster Models

⚠WARNING

The automatic-on headlamp feature provides increased visibility of the rider to other motorists. Be sure headlamp is on at all times. Poor visibility of rider to other motorists can result in death or serious injury. (00030b)

Check headlamp beam for proper height and lateral alignment:

- When the new owner takes delivery of the motorcycle.
- When there is a change in load (adding luggage, etc.).

Inspection

1. Verify correct front and rear tire inflation pressure. Refer to Tire Pressures: 2008 Sportster Models.

2. Place motorcycle on level floor (or pavement) in an area with a low light level.

3. See Headlamp Alignment: Sportster Models. Position motorcycle 25 feet 7.62 meters away a screen or wall. Measure distance from directly below front axle to base of screen/wall.

4. Draw a horizontal line, on screen or wall, 35 inches 0.9 meters above floor.

5. Load vehicle with rider, passenger (if normally present) and any cargo normally carried. Weight will compress vehicle suspension slightly.

6. Stand motorcycle upright with both tires resting on floor and with front wheel held in straight alignment (directly forward).

7. Turn ignition/headlamp switch to IGNITION position. Set handlebar headlamp switch to HIGH beam position.

8. Check headlamp beam for proper height alignment:

    a. Main beam of light (broad, flat pattern of light) should be centered equally above and below horizontal line on screen or wall.

    b. Main beam of light should be directed straight ahead. Properly adjusted headlamps project an equal area of light to right and left of center.

9. Adjust headlamp alignment if necessary.

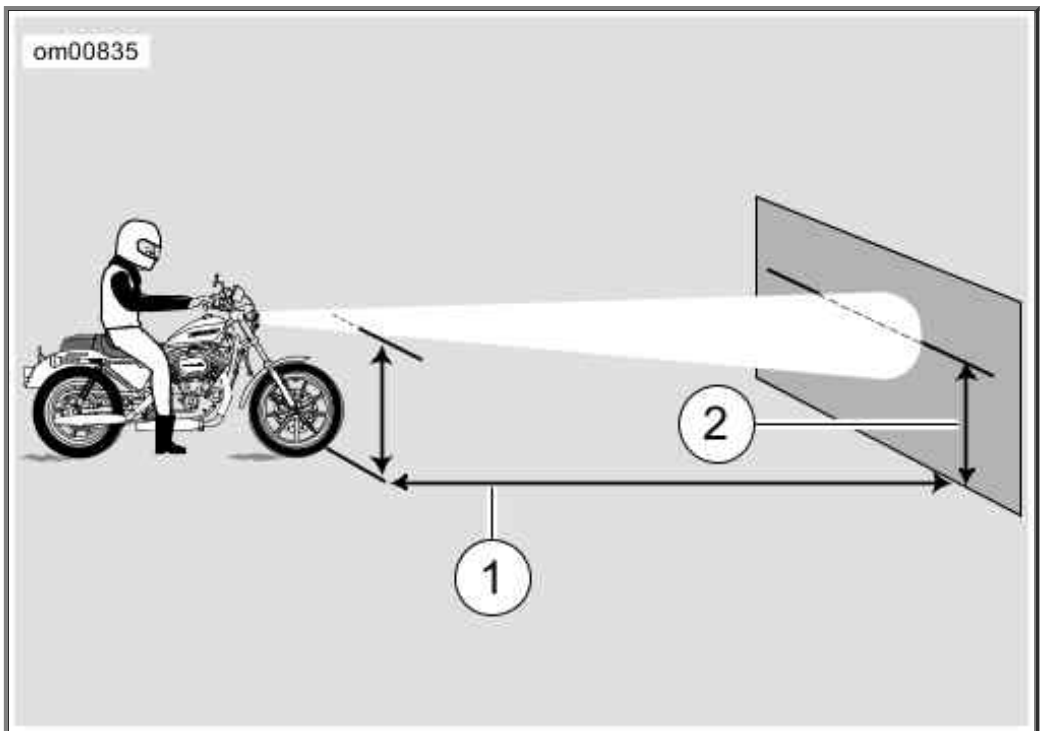

1. 25 feet (7.6 meters)
2. 35 inches (0.9 meters)

Headlamp Alignment: Sportster Models

Adjustment (XL 883C and XL 1200C Models)

Horizontal Adjustment:

1. See Headlamp Adjustment (XL 883C and XL 1200C). Loosen the Allen head capscrew (3).

2. Turn the headlamp right or left as necessary to direct the light beam straight ahead.

3. Tighten the Allen head capscrew to 30-35 ft-lbs (40.7-47.5 Nm).

Vertical Adjustment:

1. See Headlamp Adjustment (XL 883C and XL 1200C). Loosen the locknut (1) for the vertical adjustment bolt.

2. Tilt headlamp up or down to properly aim it at the horizontal line on the wall.

3. Tighten headlamp locknut to 30-35 ft-lbs (40.7-47.5 Nm).

1. Nut
2. Bolt (vertical adjustment)
3. Allen head capscrew (horizontal adjustment)

Headlamp Adjustment (XL 883C and XL 1200C)

Adjustment (All Models Except XL 883C and XL 1200C)

1. See Headlamp Snap Plug: Sportster Models (XL Model Shown). Remove snap plug (1) on top of headlamp bracket (2).

2. See Headlamp Clamp Nut: Sportster Models (XL Model Shown). Loosen headlamp clamp nut.

3. Tilt headlamp up or down to properly aim it in relation to the horizontal line and, at the same time, turn it right or left to direct light beam straight ahead.

4. Tighten headlamp clamp nut to 120-240 in-lbs (14-27 Nm) after lamp is properly positioned. Install snap plug in headlamp bracket.

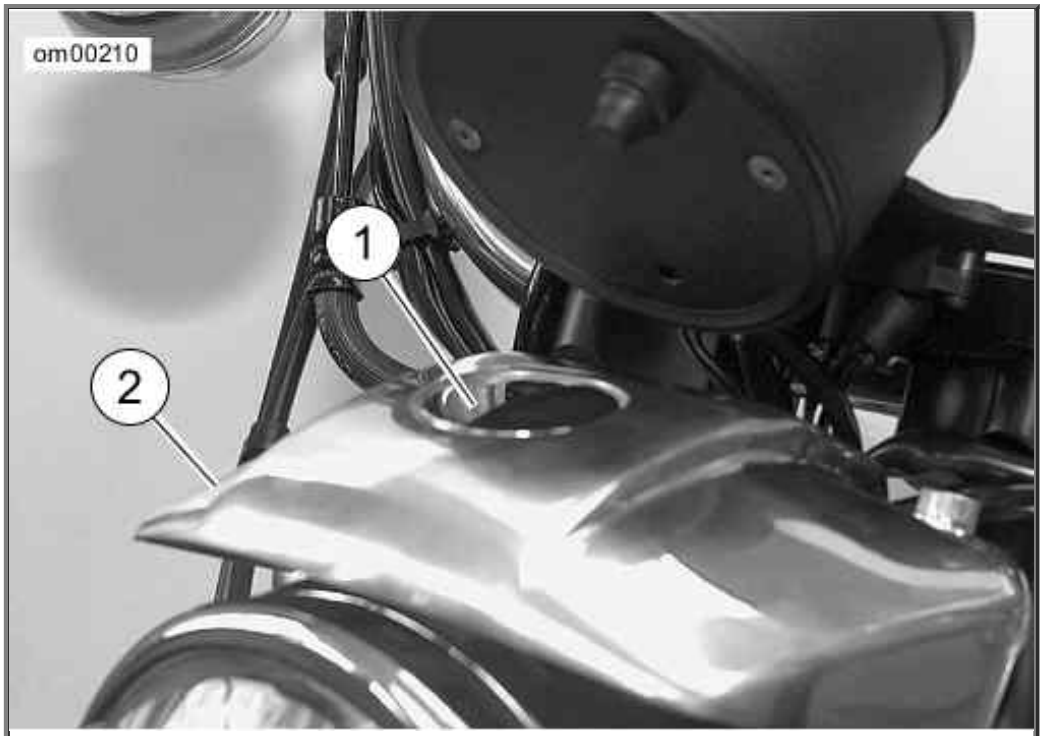

1. Snap plug
2. Headlamp bracket

Headlamp Snap Plug: Sportster Models (XL Model Shown)

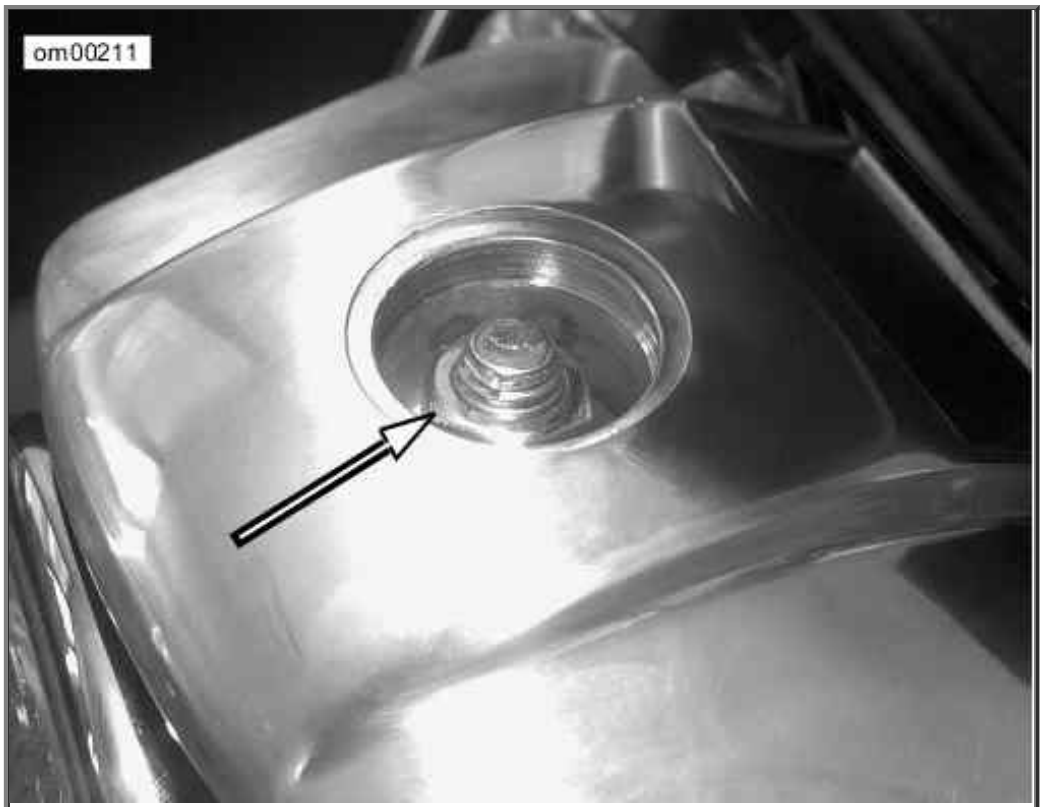

Headlamp Clamp Nut: Sportster Models (XL Model Shown)

LED Rear Turn Signal/Tail Lamps: XL 1200N Model

On the XL 1200N model, the rear turn signal/tail lamps are LED assemblies with no replaceable bulbs. Caps on rear turn signals are not removable. See dealer or service manual for assembly replacement.

Turn Signal Bulb Replacement: Bullet Style

1. See Lens Cap Notch. Insert a coin or the blade of a small screwdriver into the notch at the bottom of the lens cap. Carefully twist until the lens cap pops out of the lamp housing.
2. Push in bulb and rotate counterclockwise. Pull bulb from socket.
3. Inspect condition of electrical contacts in socket. If necessary, clean with a small wire brush and electrical contact cleaner.
4. Coat base of **new** bulb with ELECTRICAL CONTACT GREASE 99861-90 .
5. Orient index pins on **new** bulb with pin guides inside bulb socket. Push bulb in and turn clockwise to lock in place.
6. Snap lens cap back into the lamp holder. Rotate lens to position notch at bottom of lamp.

⚠WARNING

Be sure that all lights and switches operate properly before operating motorcycle. Low visibility of rider can result in death or serious injury. (00316a)

7. Turn ignition on and test for proper turn signal operation.

NOTE:

If the turn signal or running lamp will not light after replacing a bulb, check the wiring, the ground at the socket and/or the switch.

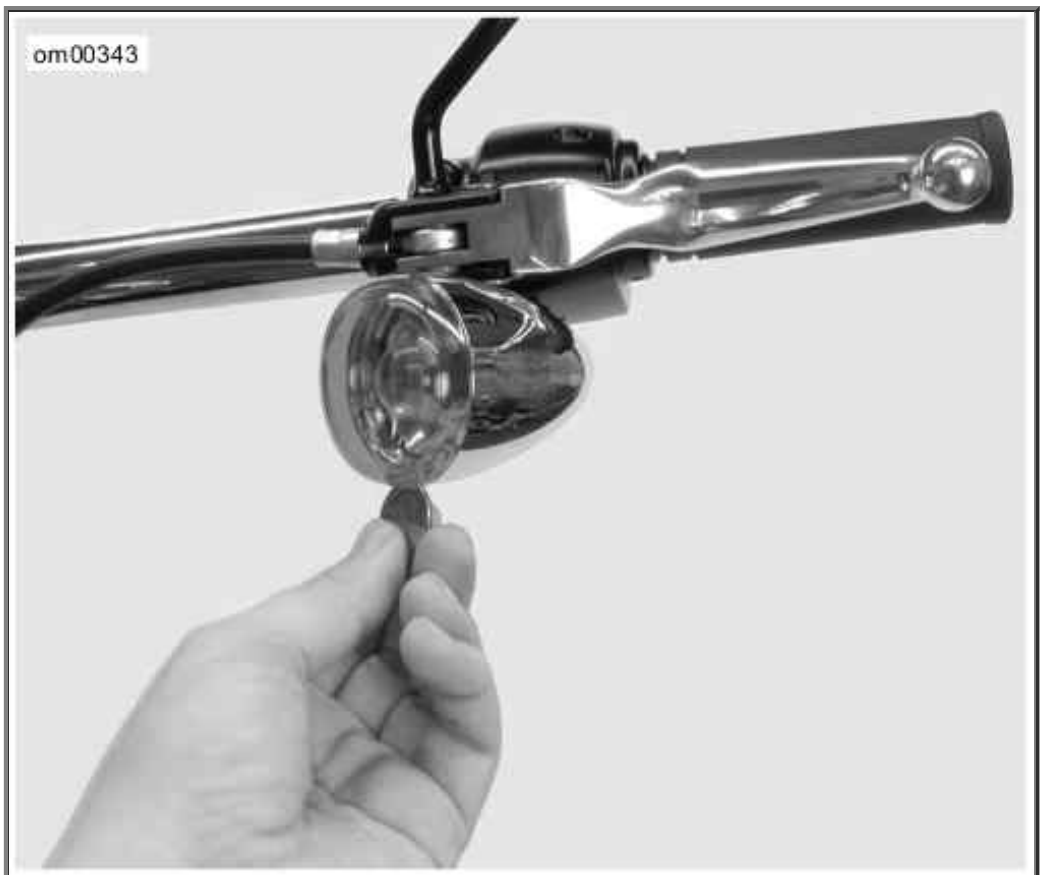

Lens Cap Notch

Tail Lamp Bulb Replacement: Standard Style

1. See Tail Lamp Assembly: Standard Style. Make certain ignition switch is turned off.
2. Remove two screws and lens from base.

   NOTE:

   For ease of bulb removal, the 4-Pin multilock connector can be removed from circuit board.

3. Remove (pull) bulb assembly from lens. Remove bulb from socket.
4. Coat base of **new** bulb with ELECTRICAL CONTACT GREASE (Part No. 99861-90). Install **new** bulb in socket.
5. Install (push) bulb assembly to lens.
6. If removed connect 4-Pin multilock connector to circuit board.
7. Install lens to base with two screws. Tighten screws to 20-24 in-lbs (2.3-2.7 Nm).

⚠WARNING

Be sure that all lights and switches operate properly before operating motorcycle. Low visibility of rider can result in death or serious injury. (00316a)

8. Turn ignition on and test for proper tail lamp operation.

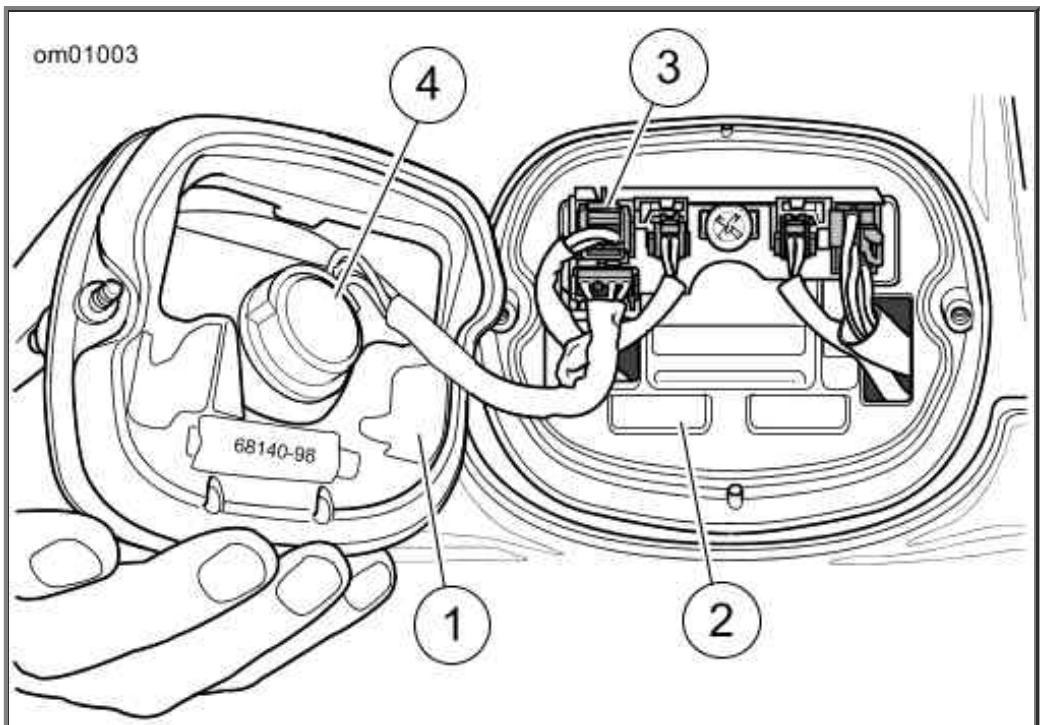

1. Lens
2. Base
3. 4-pin multilock connector
4. Bulb assembly

Tail Lamp Assembly: Standard Style

Alternator/Voltage Regulator

Charging Rate

The alternator output is controlled and changed to direct current by the voltage regulator.

- The voltage regulator increases charging rate when battery is low or lamps are lit.
- The voltage regulator decreases charging rate when battery charge is up.

CAUTION

It is possible to overload your motorcycle's charging system by adding too many electrical accessories. If your combined electrical accessories operating at any one time consume more electrical current than your vehicle's charging system can produce, the electrical consumption can discharge the battery and cause vehicle electrical system damage. See a Harley-Davidson dealer for advice about the amount of current consumed by additional electrical accessories, or for necessary wiring changes. (00211b)

NOTES:

- *This unit requires no interval attention. If any electrical system trouble is experienced that might be traceable to the alternator or voltage regulator, the motorcycle should be taken to a Harley-Davidson dealer who has the necessary electrical testing equipment to give the required attention.*
- *For model specific information regarding the voltage regulator, refer to the appropriate Service Manual or see a Harley-Davidson dealer.*

Battery: General

Type

Your motorcycle uses a permanently sealed, maintenance-free, lead/calcium and sulfuric acid battery. All batteries are shipped precharged and ready to be put into service. Do not attempt to open the battery for any reason.

Antidotes for Battery Acid

CONTACT	TREATMENT
External	Flush with water.
Internal	Drink large quantities of milk or water, followed by milk of magnesia, vegetable oil or beaten eggs. Get immediate medical attention.
Eyes	Flush with water. Get immediate medical attention.

⚠WARNING

Batteries contain sulfuric acid, which could cause severe burns to eyes and skin. Wear a protective face shield, rubberized gloves and protective clothing when working with batteries. KEEP BATTERIES AWAY FROM CHILDREN. (00063a)

⚠WARNING

Explosive hydrogen gas, which escapes during charging, could cause death or serious injury. Charge battery in a well-ventilated area. Keep open flames, electrical sparks and smoking materials away from battery at all times. KEEP BATTERIES AWAY FROM CHILDREN. (00065a)

⚠WARNING

Batteries, battery posts, terminals and related accessories contain lead and lead compounds, and other chemicals known to the State of California to cause cancer, and birth defects or other reproductive harm. Wash hands after handling. (00019e)

⚠WARNING

Never remove warning label attached to top of battery. Failure to read and understand all precautions contained in warning, could result in death or serious injury. (00064a)

1. Contents are corrosive
2. Wear safety glasses
3. Contents are explosive
4. Keep flames away
5. Read instructions
6. Keep away from children

Battery Warning Label

Battery Warning Label

Voltmeter Test

Refer to Voltmeter Test. The voltmeter test provides a general indicator of battery condition. Check the voltage of the battery to verify that it is in a 100 percent fully charged condition. If the open circuit (disconnected) voltage reading is below 12.6V, charge the battery and then re-check the voltage after the battery has set for one to two hours.

Voltmeter Test

READING IN VOLTS	PERCENT OF CHARGE
12.7	100
12.6	75
12.3	50
12.0	25
11.8	0

Cleaning and Inspection

Battery top must be clean and dry. Dirt and electrolyte on top of the battery can cause battery to self-discharge.

1. Clean battery top.

2. Clean cable connectors and battery terminals using a wire brush or fine grit sandpaper to remove any oxidation.

3. Inspect and clean the battery screws, clamps and cables. Check for breakage, loose connections and corrosion.

4. Check the battery posts for melting or damage caused by overtightening.

5. Inspect the battery for discoloration, a raised top or a warped or distorted case. This might indicate that the battery has been frozen, overheated or overcharged.

6. Inspect the battery case for cracks or leaks.

Charging

Never charge a battery without first reviewing the instructions for the charger being used. In addition to the manufacturer's instructions, follow these general safety precautions.

Charge the battery if any of the following conditions exist:

- Vehicle lamps appear dim.
- Electric starter sounds weak.
- Battery has not been used for an extended period of time.

⚠WARNING

Explosive hydrogen gas, which escapes during charging, could cause death or serious injury. Charge battery in a well-ventilated area. Keep open flames, electrical sparks and smoking materials away from battery at all times. KEEP BATTERIES AWAY FROM CHILDREN. (00065a)

⚠WARNING

Batteries contain sulfuric acid, which could cause severe burns to eyes and skin. Wear a protective face shield, rubberized gloves and protective clothing when working with batteries. KEEP BATTERIES AWAY FROM CHILDREN. (00063a)

1. Perform a voltmeter test to determine the state of charge. If battery needs to be charged, proceed to the next step.

2. Place the battery on a level surface.

⚠WARNING

Unplug or turn OFF battery charger before connecting charger cables to battery. Connecting cables with charger ON can cause a spark and battery explosion, which could result in death or serious injury. (00066a)

⚠WARNING

Connect positive (+) battery cable first. If positive (+) cable should contact ground with negative (-) cable connected, the resulting sparks can cause a battery explosion, which could result in death or serious injury. (00068a)

⚠WARNING

Disconnect negative (-) battery cable first. If positive (+) cable should contact ground with negative (-) cable connected, the resulting sparks can cause a battery explosion, which could result in death or serious injury. (00049a)

CAUTION

Do not reverse the charger connections described in the following steps or the charging system of the motorcycle could be damaged. (00214a)

NOTES:

- *The figures listed in the Amp-hour table assume that the battery is charging at room temperature. If warmer than room temperature, use a slightly shorter charging time. If colder, use a slightly longer charging time.*
- *The use of constant current chargers to charge sealed maintenance free batteries is not recommended. Any overcharge will cause dry-out and premature battery failure. If a constant current charger is the only type available, do not exceed the charge times listed in 12 Amp-Hour Battery Charging Rates and Times and do not continue charging the battery if it gets hot. When charging, never exceed 15 volts.*

3. Connect the red battery charger lead to positive (+) terminal of the battery.

4. Connect the black battery charger lead to negative (-) terminal of the battery.

   NOTE:

   If the battery is still in the vehicle, connect the negative lead to the chassis ground. Make sure that the ignition and all electrical accessories are turned off.

5. Step away from the battery and turn on the charger.

⚠WARNING

Unplug or turn OFF battery charger before disconnecting charger cables from battery. Disconnecting clamps with charger ON can cause a spark and battery explosion, which could result in death or serious injury. (00067a)

6. After the battery is fully charged, turn OFF the charger and disconnect the black battery charger lead to the negative (-) terminal of the battery.

7. Disconnect the red battery charger lead to the positive (+) terminal of the battery.

8. Mark the charging date on the battery.

12 Amp-Hour Battery Charging Rates and Times

READING (VOLTS)	PERCENT CHARGE	3 AMP CHARGER	6 AMP CHARGER	10 AMP CHARGER	20 AMP CHARGER
12.7	100	N/A	N/A	N/A	N/A
12.6	75	1 hour 10 minutes	34 minutes	20 minutes	10 minutes
12.3	50	2 hours 20 minutes	70 minutes	40 minutes	20 minutes
12.0	25	3 hours 20 minutes	1 hour 40 minutes	1 hour	30 minutes
11.8	0	4 hours 30 minutes	2 hours 14 minutes	1 hour 20 minutes	40 minutes

Storage

CAUTION

Turn engine over a few times to be sure there is no oil in the crankcase and that all oil has been pumped back into the oil tank. Stop engine and re-check oil level. Failure to do so can result in engine damage. (00071a)

CAUTION

Do not allow battery to completely discharge. The electrolyte in a discharged battery will freeze. The more discharged a battery is, the more easily it can freeze and crack the battery case. (00218a)

If the motorcycle will not be operated for several months, such as during the winter season, remove the battery from the motorcycle and fully charge.

If the motorcycle is to be stored with the battery installed, it will be necessary to connect a battery tender to maintain charge. See an authorized dealer for more information.

Self-discharge is a normal condition and occurs continuously. The rate of self-discharge depends on the ambient temperature and the battery's state of charge.

- Batteries discharge at a faster rate at higher ambient temperatures.
- To reduce the self-discharge rate, store battery in a cool (not freezing), dry place.
- Charge the battery every month if stored at temperatures below 60° F 16° C .
- Charge the battery more frequently if stored in a warm area above 60° F 16° C .

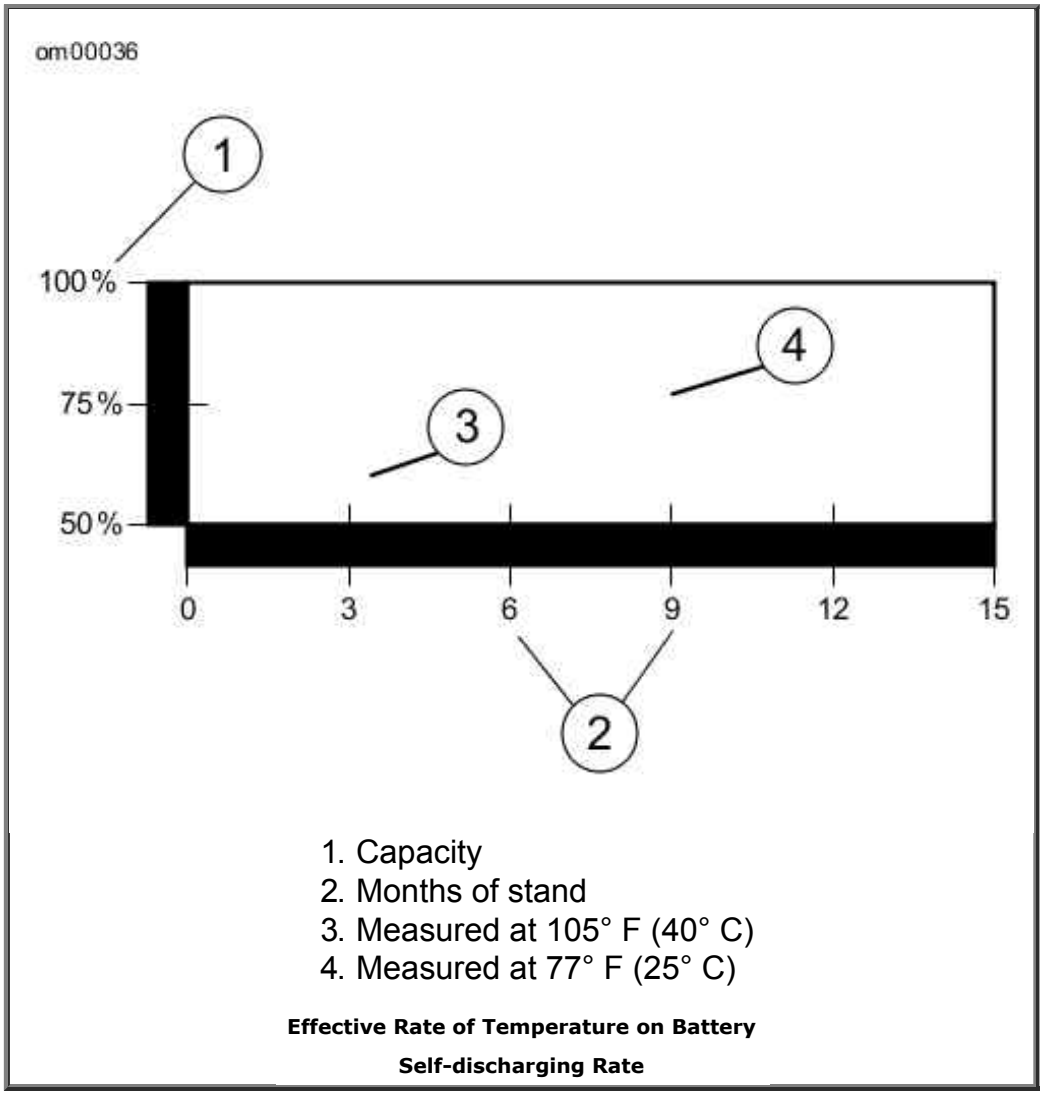

Left Side Cover: Sportster Models

See Left Side Cover: Sportster Models (XL Model Shown). The left side cover provides access to the main fuse holder, battery and fuse/relay block. No tools are required to remove or reinstall the side cover.

Opening

NOTE:

The left side cover does not need to be completely removed from the vehicle to access the battery or fuses.

1. Place a shop cloth or other clean, dry cloth over rear brake master cylinder reservoir and left passenger foot peg (if equipped). This will protect left side cover from damage.

2. Grasp left side cover at upper corners and gently pull away from frame.

3. While rotating top of cover out away from motorcycle, slide cover down slightly so mounting slot slides down from mounting tab on battery tray. Side cover will now rest on top of rear brake master cylinder reservoir and left passenger footpeg (if equipped) with slot hanging off bottom of mounting tab.

Closing

1. Raise the left side cover.
2. On the XR 1200 model, align the locating pins with the grommets on the frame. Press the left side cover to secure.
3. On all other models, align the slots in the top of the left side cover with the clips on the frame. Press the left side cover to secure.

Battery Disconnection and Removal

⚠WARNING

Disconnect negative (-) battery cable first. If positive (+) cable should contact ground with negative (-) cable connected, the resulting sparks can cause a battery explosion, which could result in death or serious injury. (00049a)

1. Open left side cover.
2. See Maxi-Fuse and Battery Location: All Models. Press Maxi-Fuse holder (1) toward the rear of the motorcycle until it pops off its mounting pin on battery strap (3). Remove Maxi-Fuse holder from battery strap.
3. Press data link connector (5) toward the rear of the motorcycle until it pops off its mounting pin on battery strap. Remove the connector from battery strap.
4. Remove battery strap screw and flat washer (4). Unhook battery strap from battery tray mount on top of battery and remove strap.
5. See Negative (-) Battery Connection. Remove nut (2) that secures the negative (-) battery cable (1) connector to ground stud (5) on crankcase boss behind starter motor assembly (3). Remove cable connector from stud.
6. Pull end of negative (-) cable forward gently to free it from cable clip (4).
7. See Maxi-Fuse and Battery Location: All Models. Lift up protective rubber boot covering battery positive (+) terminal (2). Unthread screw from battery positive (+) terminal and remove positive (+) battery cables.
8. See Positive (+) Battery Cable Holders. Disengage positive (+) battery cable (2) from cable holders (1).
9. Remove battery from battery tray. See Negative (-) Battery Connection. Note routing of negative (-) battery cable around frame downtube.
10. If battery is to be left out of vehicle (i.e. winter storage), close left side cover.

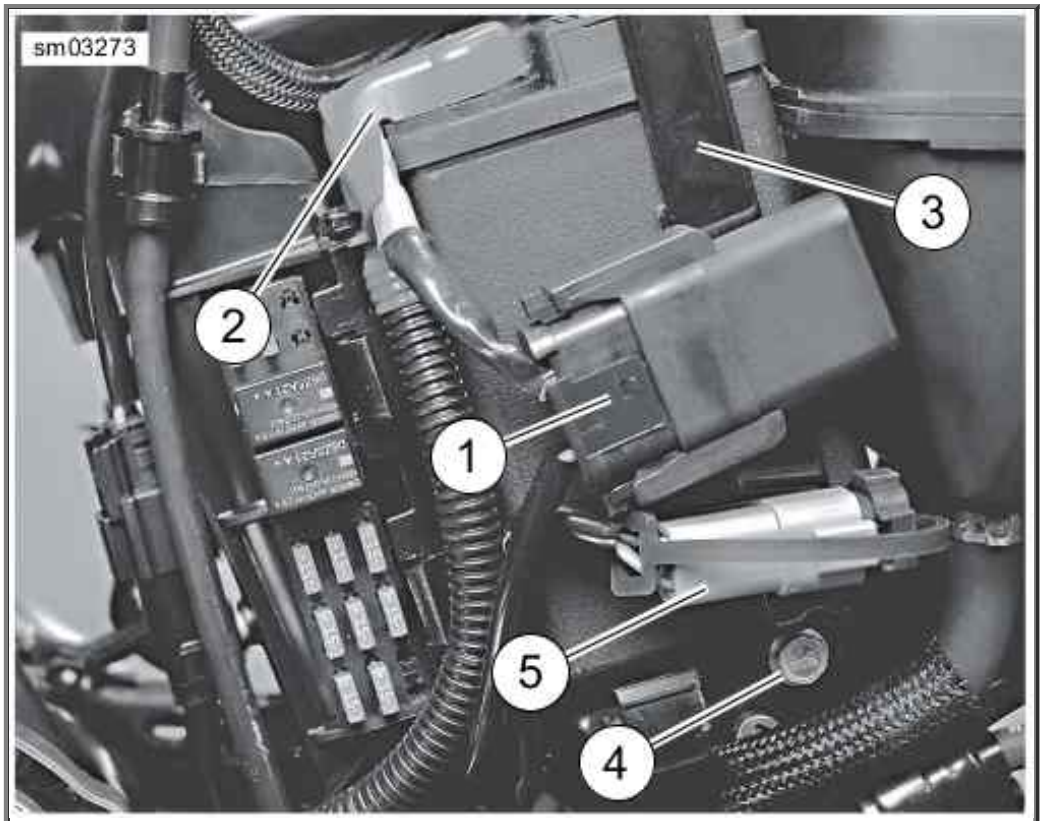

1. Maxi-fuse (main fuse) and holder
2. Positive (+) battery terminal (under protective rubber boot)
3. Battery strap
4. Screw and flat washer
5. Data link connector

Maxi-Fuse and Battery Location: All Models

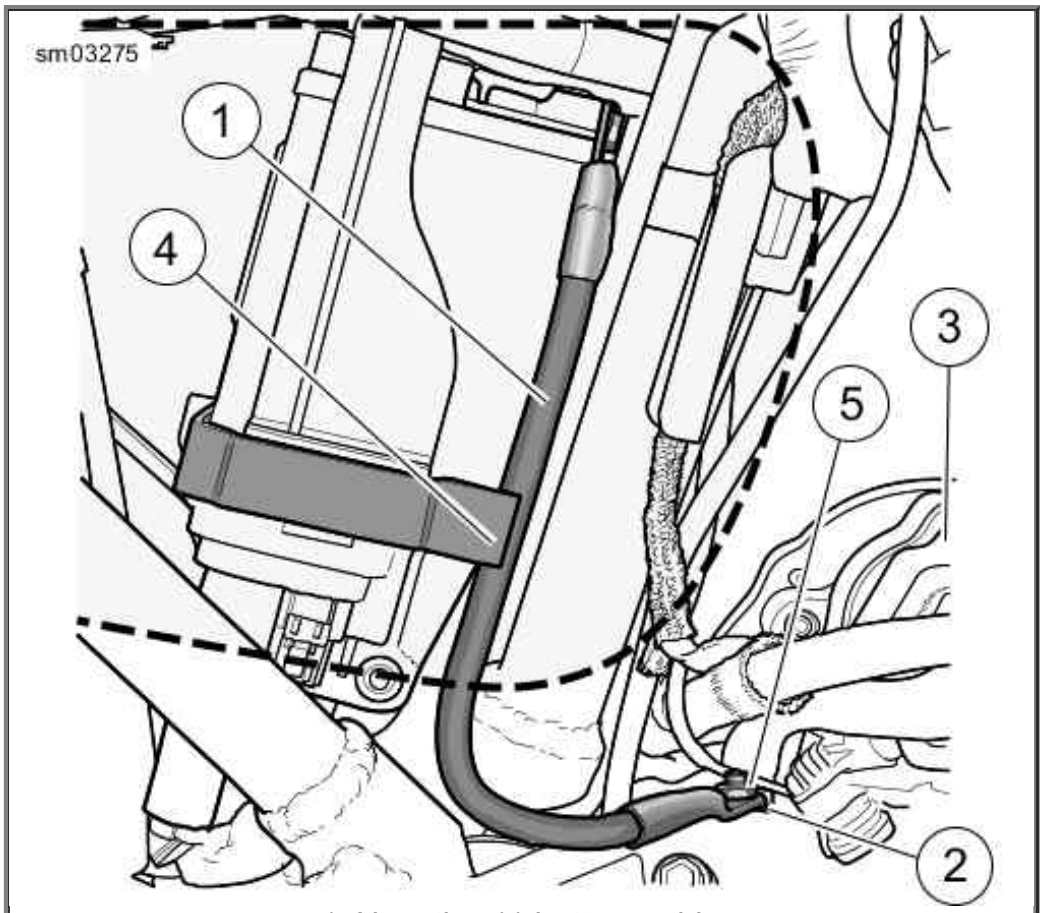

1. Negative (-) battery cable
2. Nut
3. Starter motor assembly
4. Cable clip
5. Ground stud

Negative (-) Battery Connection

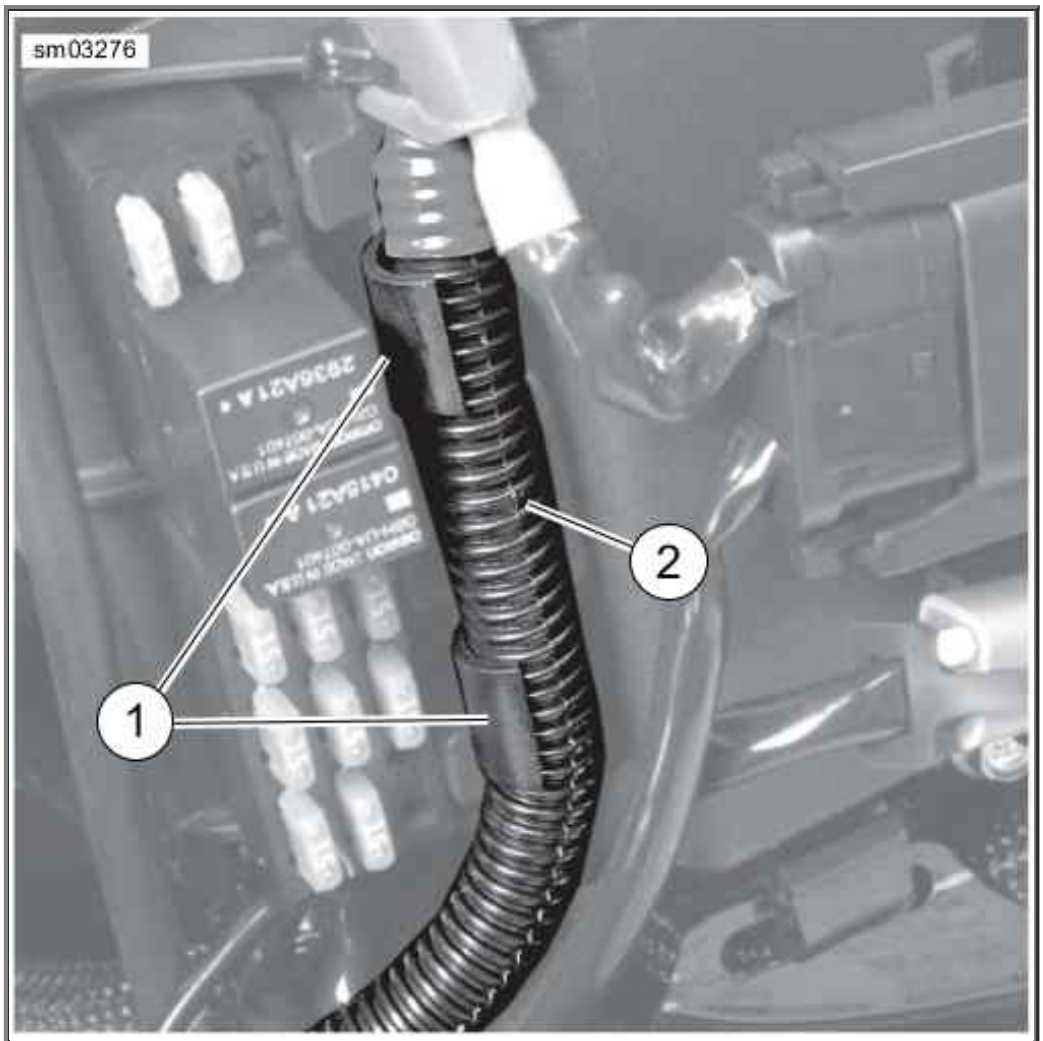

1. Cable holders
2. Positive battery cable

Positive (+) Battery Cable Holders

Battery Installation and Connection

CAUTION

Connect the cables to the correct battery terminals. Failure to do so could result in damage to the motorcycle electrical system. (00215a)

1. If negative (-) battery cable was removed from battery, insert screw through negative (-) battery cable and into negative (-) battery terminal. Thread screw into terminal. Position negative (-) battery cable so that it hangs straight down from negative (-) battery terminal. Tighten screw to 60-70 in-lbs (6.8-7.9 Nm).

2. Apply a light coat of petroleum jelly or corrosion retardant material to the negative (-) battery terminal.

3. Open left side cover.

4. Slide fully charged battery into battery tray, routing negative (-) battery cable around frame downtube.

⚠WARNING

Connect positive (+) battery cable first. If positive (+) cable should contact ground with negative (-) cable connected, the resulting sparks can cause a battery explosion, which could result in death or serious injury. (00068a)

⚠WARNING

Do not allow positive (+) battery cable to contact ground with negative (-) cable connected. Resulting sparks can cause a battery explosion, which could result in death or serious injury. (00069a)

5. See Maxi-Fuse and Battery Location: All Models. With negative (-) battery cable disconnected from grounding point on crankcase, insert screw through positive (+) battery cables: through maxi-fuse cable first, then through main positive (+) battery cable, and into positive (+) battery terminal (2). Thread screw into terminal. Tighten to 70-80 in-lbs (7.9-9.0 Nm).

6. Apply a light coat of petroleum jelly or corrosion retardant material to the positive (+) battery terminal. Place protective rubber boot over terminal.

7. Hook top of battery strap (3) to battery tray mount on top of battery. Install flat washer and strap screw (4). Tighten to 36-60 in-lbs (4.1-6.8 Nm).

8. Route main positive (+) battery cable through holders on electrical bracket.

9. Hook Maxi-Fuse holder (1) to top pin on battery strap and slide forward until it snaps into place.

10. Hook data link connector (5) to bottom pin on battery strap and slide forward until it snaps into place.

11. See Negative (-) Battery Connection. Press negative (-) battery cable (1) into cable clip (4).

12. Place negative (-) battery cable connector onto ground stud (5) on crankcase boss behind starter motor assembly (3). Thread nut (2) onto stud.

13. See Attaching Negative (-) Battery Cable to Ground Stud Crankcase: XL or Attaching Negative (-) Battery Cable to Ground Stud Crankcase: XR. Press negative (-) battery cable connector (1) against cable stop (2) on crankcase and tighten nut (3) to 55-75 in-lbs (6.2-8.5 Nm).

14. Close left side cover.

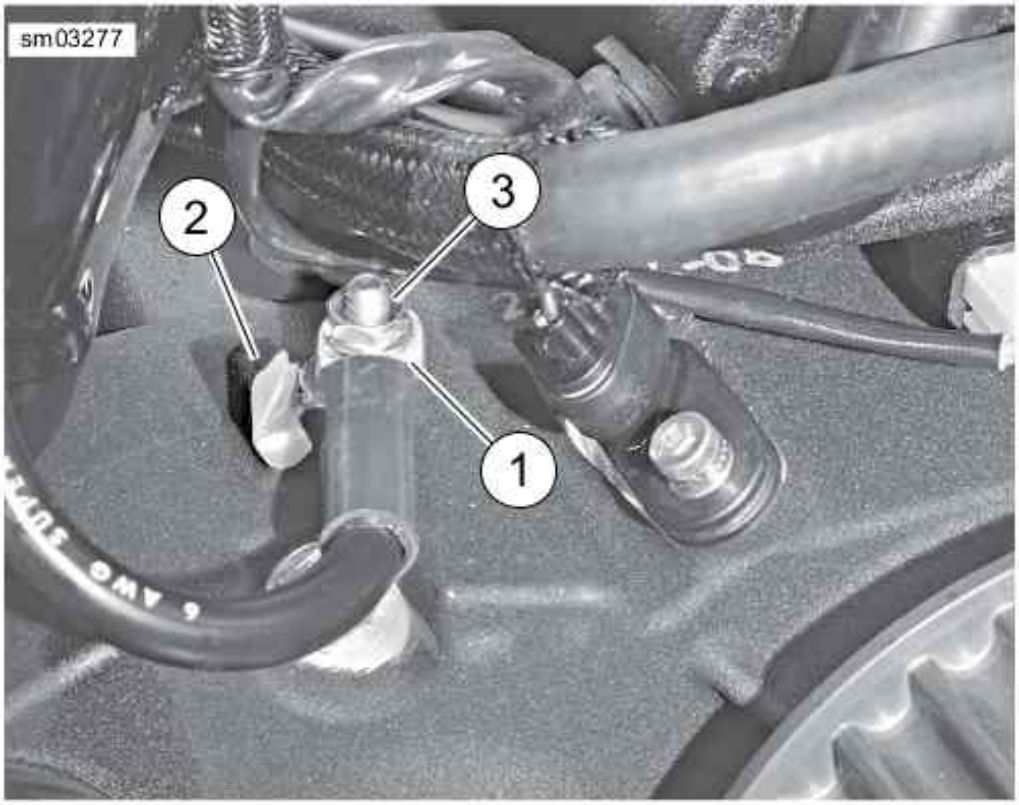

1. Negative battery cable connector
2. Cable stop
3. Nut

Attaching Negative (-) Battery Cable to Ground

Stud Crankcase: XL

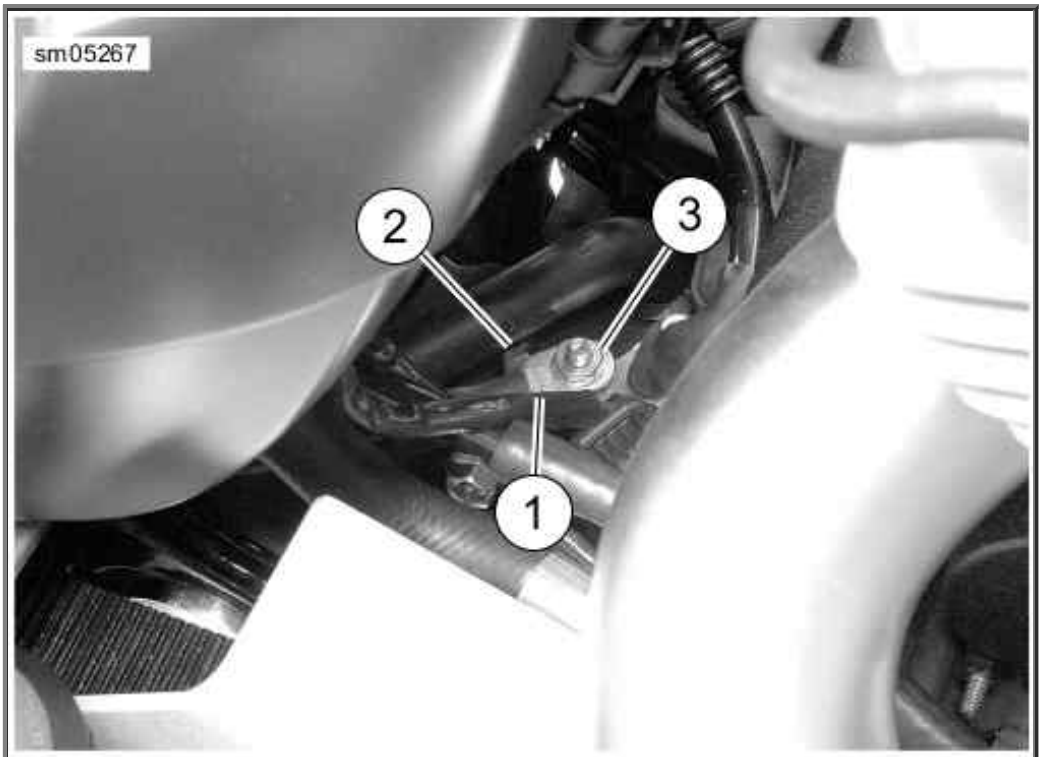

1. Negative battery cable connector
2. Cable stop
3. Nut

Attaching Negative (-) Battery Cable to Ground

Stud Crankcase: XR

Jump Starting

Harley-Davidson does not recommend jump-starting a motorcycle. However, there may be circumstances when it is necessary to do so. Therefore, we suggest jump-starting be performed as follows:

⚠WARNING

Be sure jumper cables touch only appropriate battery terminals or ground. Allowing jumper cables to touch each other can result in sparks and a battery explosion, which could result in death or serious injury. (00072a)

⚠WARNING

Explosive hydrogen gas, which escapes during charging, could cause death or serious injury. Charge battery in a well-ventilated area. Keep open flames, electrical sparks and smoking materials away from battery at all times. KEEP BATTERIES AWAY FROM CHILDREN. (00065a)

CAUTION

Harley-Davidson motorcycles have a 12 Volt battery. Be sure the booster vehicle has a 12 Volt system. Failure to do so could result in vehicle damage. (00220a)

NOTE:

This procedure presumes the BOOSTER battery is in another vehicle.

1. Turn off all unnecessary lamps and accessories.

Positive Cable

2. See Jump Start Cable Connections. Connect one end of a jumper cable to the DISCHARGED battery positive (+) terminal (1).
3. Connect the other end of the same cable to the BOOSTER battery positive (+) terminal (2).

Negative Cable

⚠WARNING

Do not connect negative (-) cable to or near the discharged battery negative (-) terminal. Doing so could cause a spark and explosion, which could result in death or serious injury. (00073a)

4. Connect one end of a jumper cable to the BOOSTER battery negative (-) terminal (3).

CAUTION

Do not connect the negative (-) cable to painted or chrome parts. Doing so could result in discoloration at the attachment point. (00221a)

5. Connect other end of the same cable (4) to a safe ground, (away from the DISCHARGED battery).

6. Start motorcycle.

7. Disconnect cables in reverse order of steps 2, 3, 4, 5. That is: steps 5, 4, 3, 2.

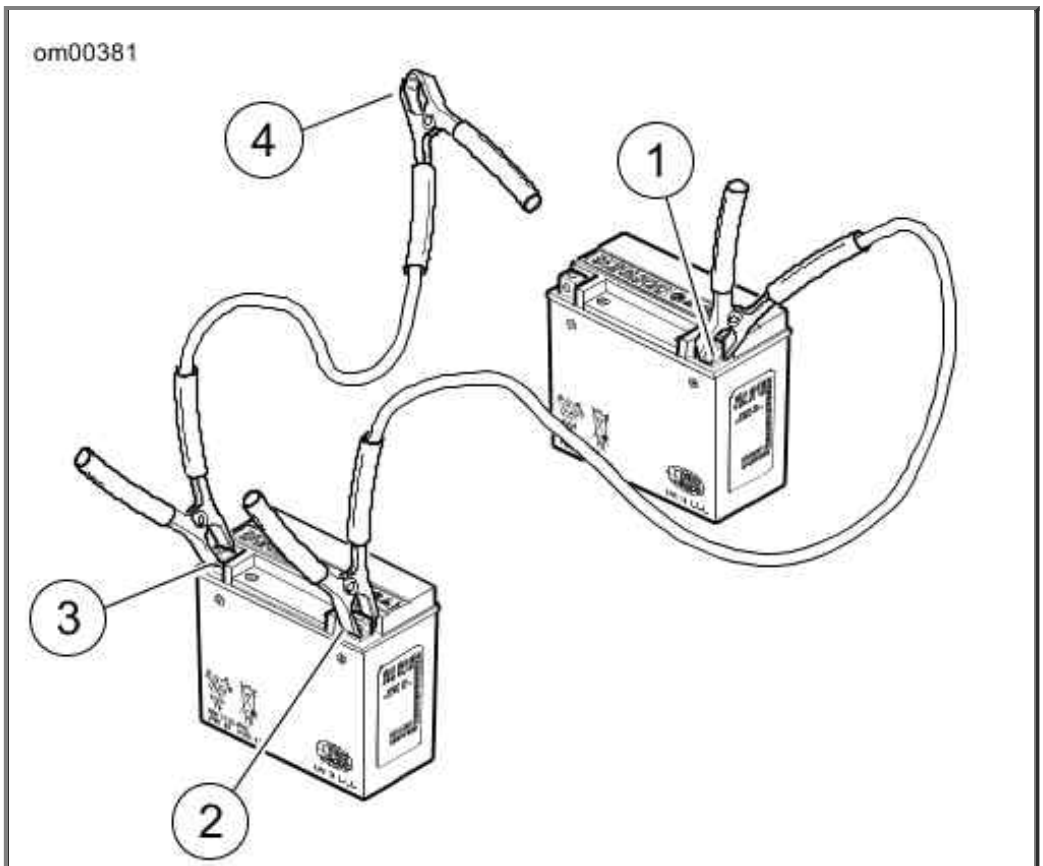

1. Discharged battery positive (+) terminal
2. Booster battery positive (+) terminal
3. Booster battery negative (-) terminal
4. Ground

Jump Start Cable Connections

Electrical Protection: Sportster Models

Fuse Replacement

CAUTION

Always use replacement fuses that are of the correct type

Always use replacement fuses that are of the correct type and amperage rating. Use of incorrect fuses can result in damage to electrical systems. (00222a)

NOTE:

Automotive type ATO fuses are used for installation and replacement.

1. Turn the ignition to the OFF position.
2. Open left side cover. See Left Side Cover: Sportster Models.
3. Locate and replace any fuse in the fuse/relay block with a burned or broken element. See Fuse Block: Sportster Models (typical) and Fuse/Relay Legend to identify which fuse protects an inoperative circuit.
4. Close left side cover.

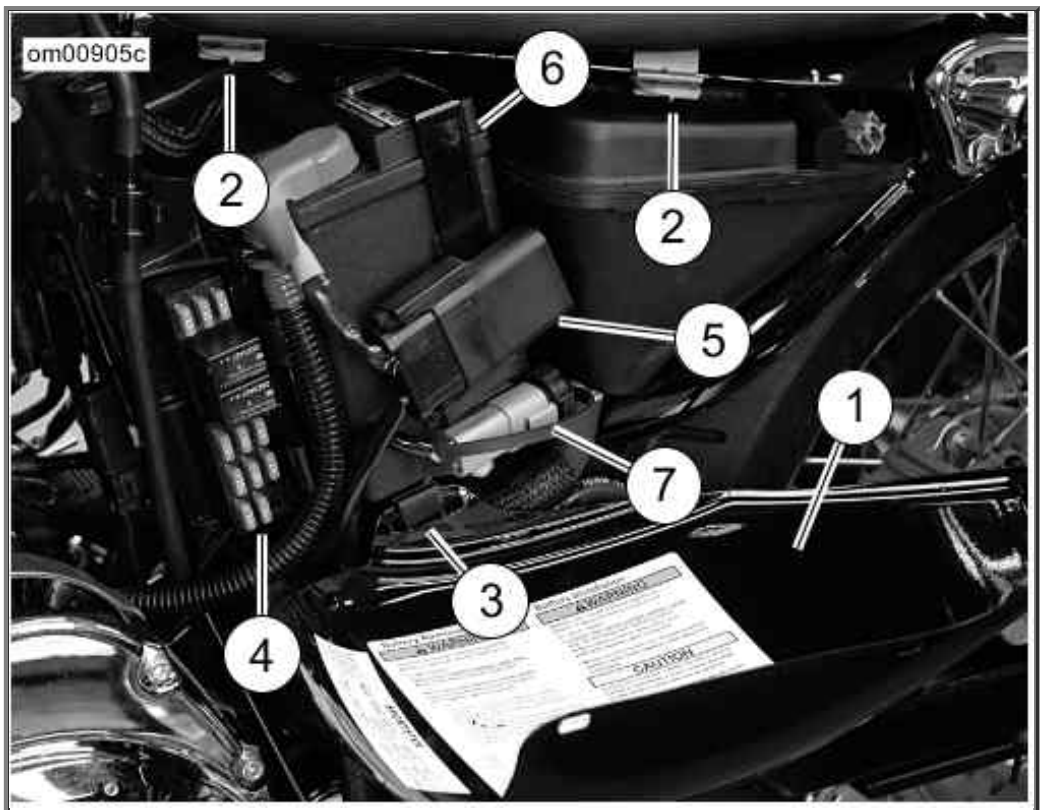

1. Side cover
2. Upper cover clips
3. Bottom slot
4. Fuse/relay block
5. Main fuse holder
6. Battery
7. Data link connector

Left Side Cover: Sportster Models (XL Model Shown)

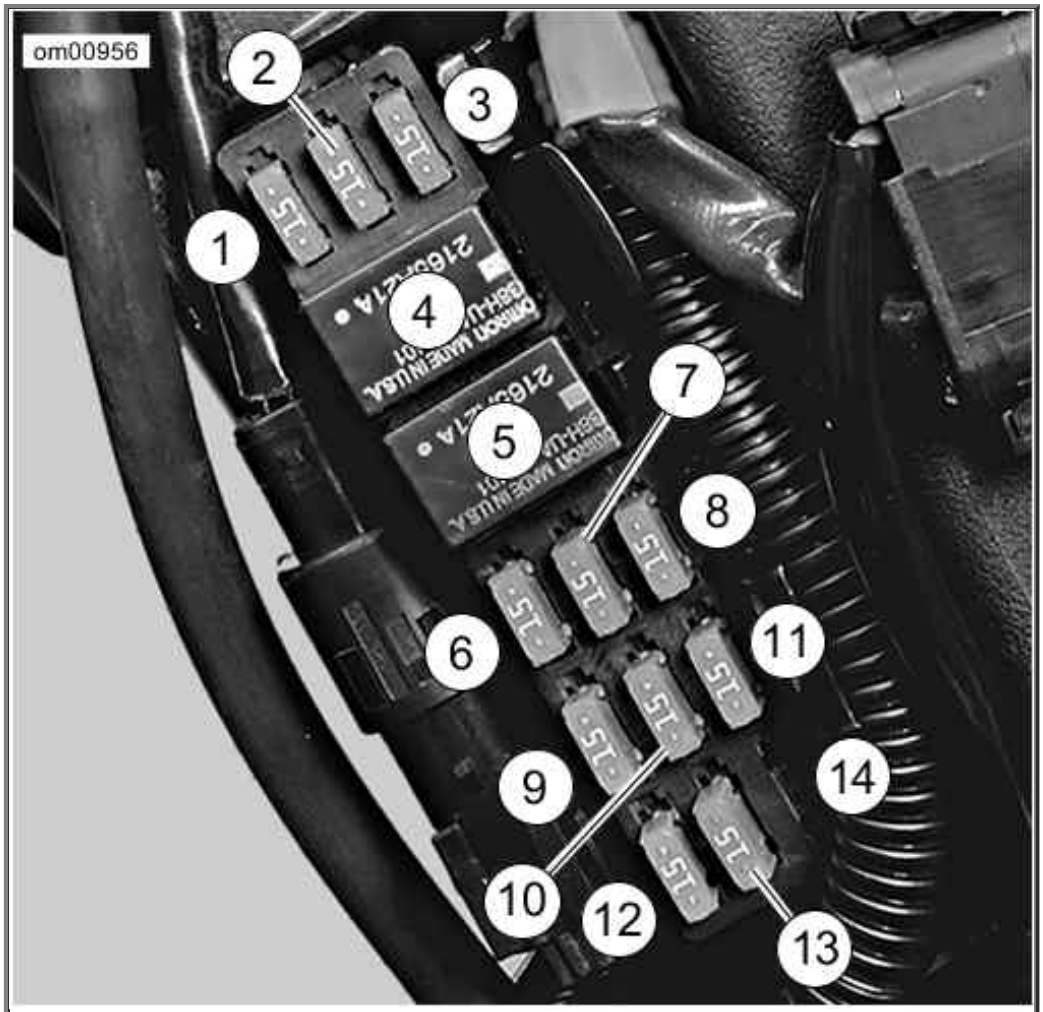

Fuse Block: Sportster Models (typical)

Fuse/Relay Legend

LEGEND NO.	CIRCUIT
1	ECM (15 Amp)
2	Fuel pump (15 Amp)
3	Spare (15 Amp)
4	Starter relay
5	System relay
6	Ignition (15 Amp)
7	Instruments (15 Amp)
8	Spare (15 Amp)
9	Accessory (15 Amp)
10	Battery (15 Amp)
11	Lights (15 Amp)
12	P&A ignition (2 Amp)
13	Engine control (15 Amp) (XR 1200) Spare (15 Amp) (XL models)
14	Open

Replacing the Main Fuse

All Sportster models have a main fuse to protect the motorcycle wiring. This 30 amp main fuse provides main battery power to the motorcycle. It is located in a rubber-coated fuse holder behind the motorcycle's left side cover.

To remove, grasp the fuse holder in one hand and the plastic body of the main fuse in the other. Pull the main fuse straight out of the fuse holder.

Insert the prongs of the **new** main fuse in the fuse holder slots. Push the main fuse firmly down into the fuse holder.

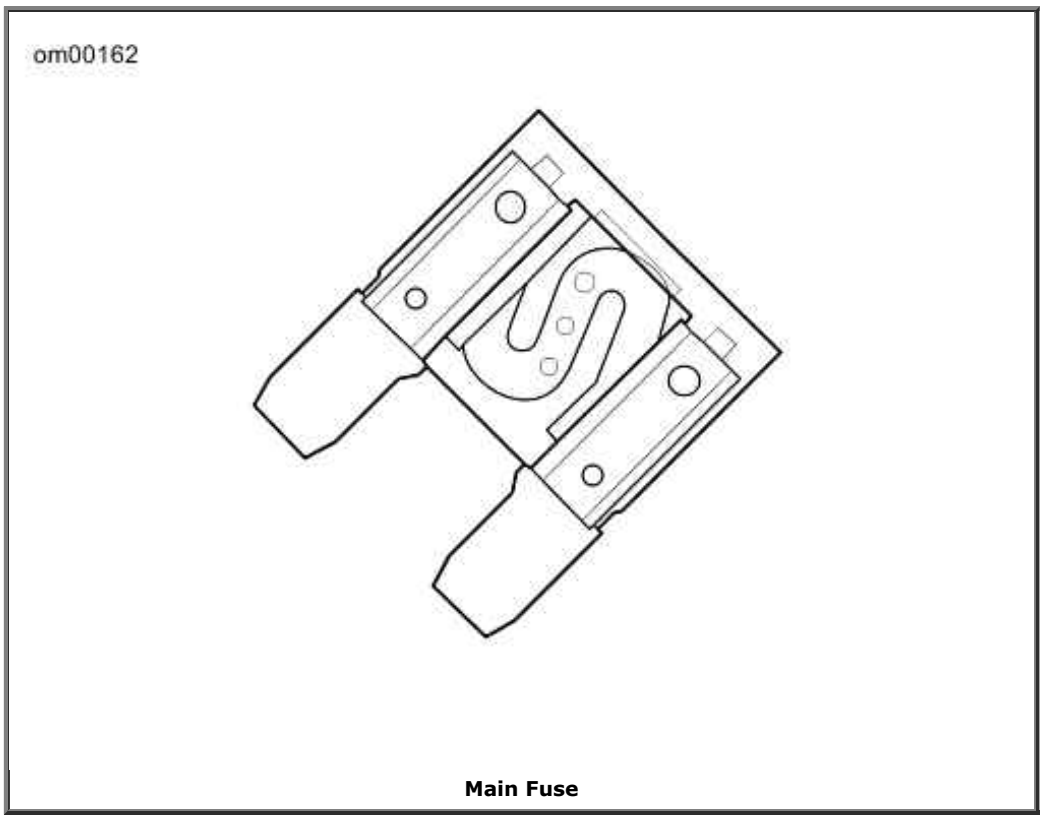

Main Fuse

Main Fuse: Sportster Models (XL Model Shown)

Seat Removal: XL Models

1. See Seat Assembly: Sportster XL Models. Remove screw (1) to detach seat from rear fender.
2. Slide seat forward and lift up slightly to detach keyhole bracket from seat post. Then slide seat rearward to detach seat tongue from rear fuel tank bracket.
3. See Seat. Verify that tongue (1) and keyhole bracket (2) are tightly secured to seat bottom and that no rivets are loose or missing.
4. See Seat Assembly: Sportster XL Models. If two-up seat (2), inspect passenger strap (4) for damage or excessive wear.

NOTE:

The passenger strap is not sold separately. If it is damaged, excessively worn or otherwise unusable, the entire seat assembly must be replaced.

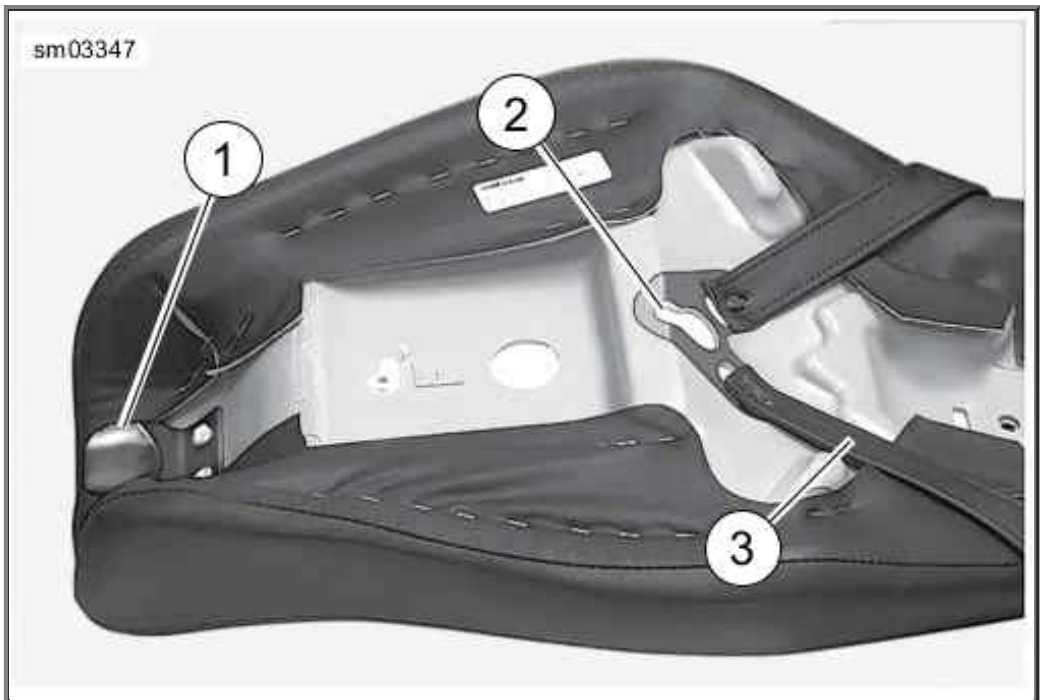

1. Tongue
2. Keyhole bracket
3. Passenger strap

Seat

Seat Post: Sportster XL Models

Seat Installation: XL Models

1. See Seat Assembly: Sportster XL Models. Position seat on frame with mounting bracket at rear.
2. Slide seat forward until the tongue fits snugly under rear fuel tank bracket.
3. See Seat Post: Sportster XL Models. Push seat forward, engage keyhole onto seat post,

then pull seat back slightly.

4. See Seat Assembly: Sportster XL Models. Install seat mounting screw with captive washer (1) to fasten seat mounting bracket to top of rear fender. Mounting bracket of solo seat uses forward hole in rear fender; dual seat uses rearward hole.

5. Pull up on seat to verify that it is locked in place.

6. Tighten seat mounting screw.

⚠WARNING

After installing seat, pull upward on seat to be sure it is locked in position. While riding, a loose seat can shift causing loss of control, which could result in death or serious injury. (00070b)

7. Pull up on seat again to verify that it is properly secured at all three points.

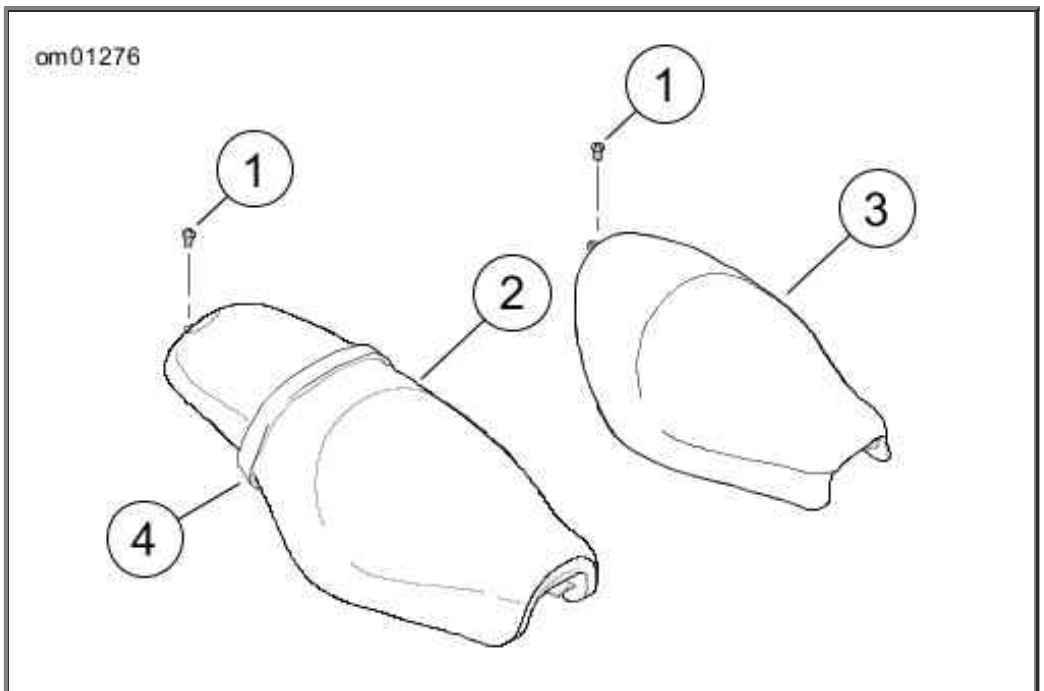

1. Seat mounting screw with captive washer
2. Seat assembly, two-up (typical)
3. Seat assembly, solo (typical)
4. Passenger strap (not sold separately)

Seat Assembly: Sportster XL Models

Seat Removal: XR 1200 Model

1. See Front Seat Tabs (Under Tail Section): XR 1200 Model. Reach under front end of tail section and press the two seat tabs inward.

2. Pull front of seat upward to disengage seat from the front end of the tail section.

3. Pull seat forward over fuel tank.

NOTES:

- *When removing the seat, verify that the mounting bracket under the seat is tightly secured to the seat bottom and that no rivets are loose or missing. Inspect passenger strap for damage or excessive wear.*
- *The passenger strap is not sold separately. If it is damaged, excessively worn, or otherwise unusable, the entire seat must be replaced.*

Front Seat Tabs (Under Tail Section): XR 1200 Model

Seat Installation: XR 1200 Model

1. See Seat and Pillion: XR 1200 Model. Place rear of seat into tail section, aligning the guides in the seat bracket with the two seat posts.

2. Push down on front of seat until the two tabs engage the front end of tail section.

⚠WARNING

After installing seat, pull upward on seat to be sure it is locked in position. While riding, a loose seat can shift causing loss of control, which could result in death or serious injury. (00070b)

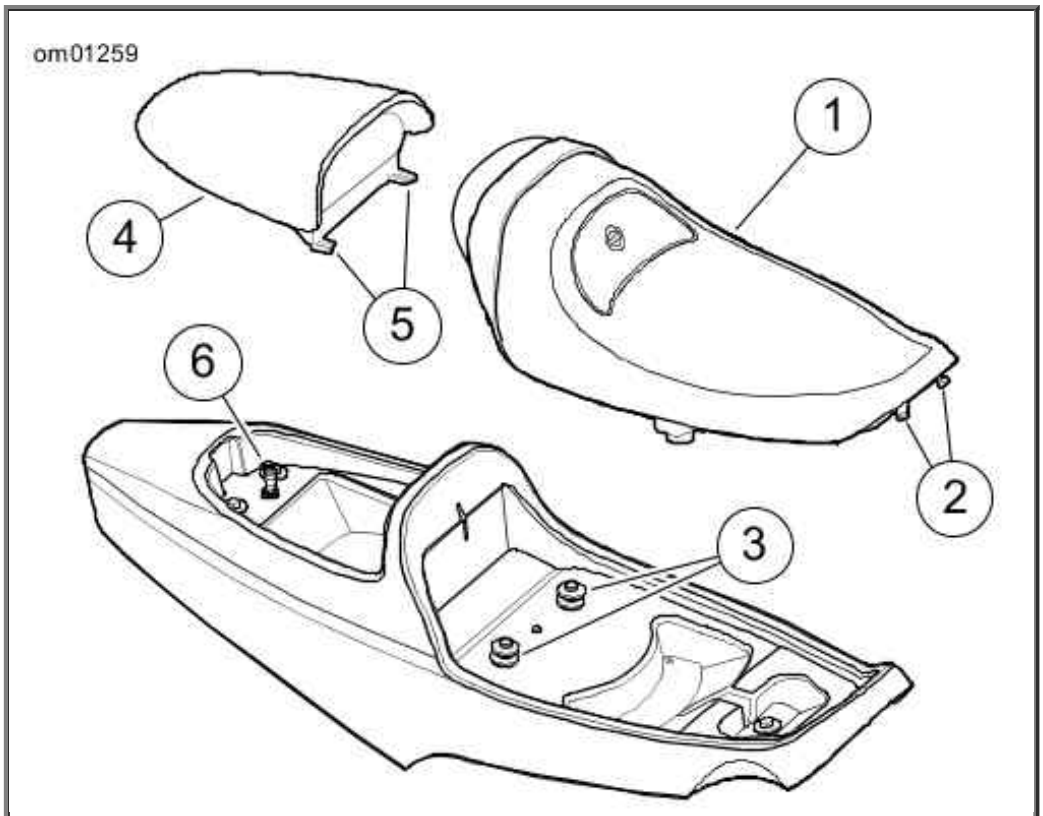

1. Seat
2. Seat tabs
3. Seat posts
4. Passenger pillion
5. Pillion tabs
6. Pillion seat post

Seat and Pillion: XR 1200 Model

Passenger Pillion: XR 1200 Model

Removal

1. See Passenger Pillion: XR 1200 Model. Lift the rear of pillion to disengage grommet from the seat post.
2. Pull pillion out from tail section.

Installation

1. See Passenger Pillion: XR 1200 Model. Insert pillion into trunk, aligning tabs on pillion with the slots in the trunk.
2. Push down firmly on rear of pillion until grommet fully engages the seat post.

⚠WARNING

After installing seat, pull upward on seat to be sure it is locked in position. While riding, a loose seat can shift causing loss of control, which could result in death or

serious injury. (00070b)

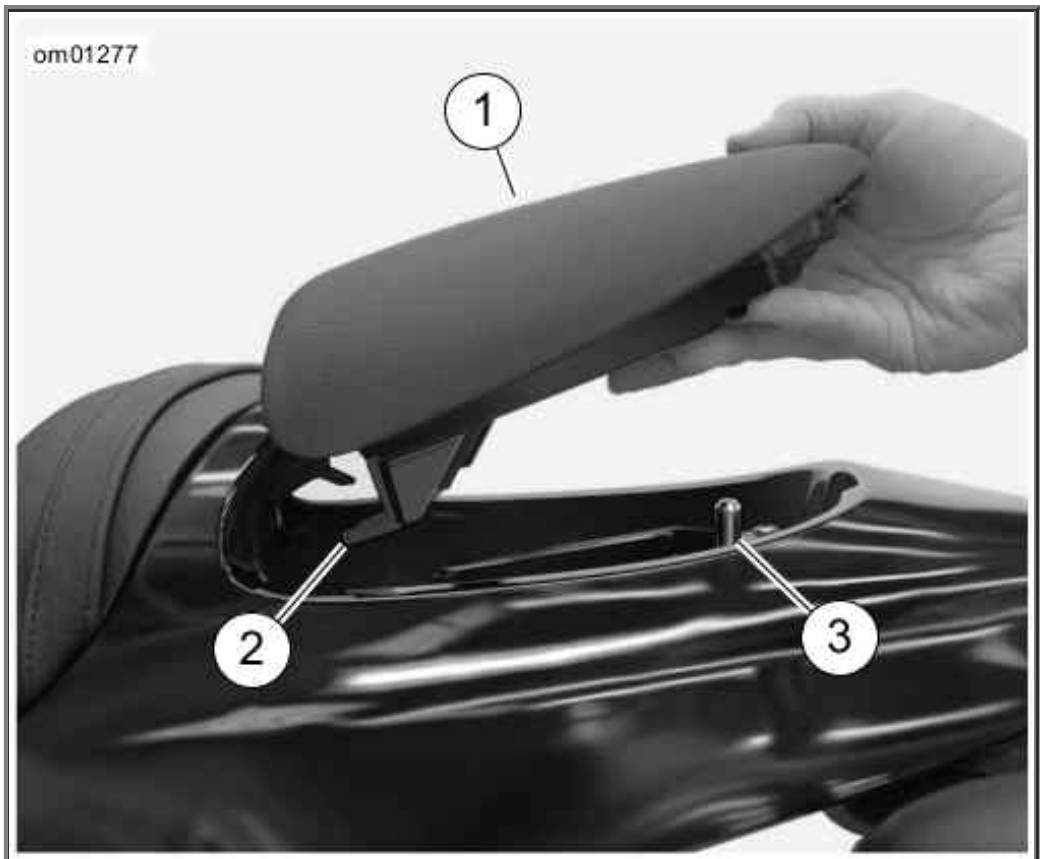

1. Pillion
2. Tabs
3. Seat post

Passenger Pillion: XR 1200 Model

Motorcycle Storage

Placing Motorcycle in Storage

CAUTION

Proper storage is important for the trouble-free operation of your motorcycle. See your Owner's Manual for storage recommendations or see a Harley-Davidson dealer. Improper storage procedures can lead to equipment damage. (00046a)

If the motorcycle will not be operated for several months, such as during the winter season, there are several tasks which should be performed. These steps will protect parts against corrosion, preserve the battery and prevent the build-up of gum and varnish in the fuel system.

⚠WARNING

Do not store motorcycle with gasoline in tank within the home or garage where open flames, pilot lights, sparks or electric motors are present. Gasoline is extremely

flammable and highly explosive, which could result in death or serious injury. (00003a)

NOTE:

Make a list of everything you do and fasten it to a handgrip. When you take the motorcycle out of storage, this list will be your reference/checklist to get your motorcycle in operating condition.

1. Fill fuel tank and add a gasoline stabilizer. Use one of the commercially available gasoline stabilizers and follow the manufacturer's instructions.
2. Warm motorcycle to operating temperature. Change oil and turn engine over to circulate the new oil.
3. Check and adjust belt if necessary.
4. Check tire inflation. Adjust to proper inflation pressure.
5. To protect the vehicle's body panels, engine, chassis and wheels from corrosion, follow the cosmetic care procedures described in the Accessory Maintenance section of this owner's manual prior to storage.
6. Prepare battery for winter storage. See Battery: General.

⚠WARNING

Explosive hydrogen gas, which escapes during charging, could cause death or serious injury. Charge battery in a well-ventilated area. Keep open flames, electrical sparks and smoking materials away from battery at all times. KEEP BATTERIES AWAY FROM CHILDREN. (00065a)

7. If the motorcycle is to be stored with security system armed, it will be necessary to connect a Battery Tender to maintain battery charge. If security system will not be armed and a Battery Tender is not available, either:
    a. Disconnect negative battery cable.
    b. Remove main fuse (if applicable).
8. If motorcycle is to be covered, use a material such as light canvas that will breathe. Plastic materials that do not breathe promote the formation of condensation.

Removing Motorcycle From Storage

⚠WARNING

The clutch failing to disengage can cause loss of control, which could result in death or serious injury. Prior to starting after extended periods of storage, place transmission in gear and push vehicle back and forth several times to assure proper clutch disengagement. (00075a)

1. See Battery: General for proper battery care. Charge and install the battery.
2. Remove and inspect the spark plugs. Replace if necessary.
3. Clean the air cleaner element.
4. Start the engine and run until it reaches normal operating temperature. Turn off engine.
5. Check amount of oil in the oil tank.
6. Check the transmission lubricant level.
7. Check controls to be sure they are operating properly. Operate the front and rear brakes, throttle, clutch and shifter.
8. Check steering for smoothness by turning the handlebars through the full operating range.

⚠WARNING

Be sure tires are properly inflated, balanced and have adequate tread. Inspect your tires regularly and see a Harley-Davidson dealer for replacements. Riding with excessively worn, unbalanced or under-inflated tires can adversely affect stability and handling, which could result in death or serious injury. (00014a)

9. Check tire pressure. Incorrect pressure will result in poor riding characteristics and can affect handling and stability.
10. Check all electrical equipment and switches including the stop lamp, turn signals and horn for proper operation.
11. Check for any fuel, oil or brake fluid leaks.

CAUTION

Turn engine over a few times to be sure there is no oil in the crankcase and that all oil has been pumped back into the oil tank. Stop engine and re-check oil level. Failure to do so can result in engine damage. (00071a)

Accessories Maintenance

Cleaning and General Maintenance

Clean and protect the cosmetic surfaces on your motorcycle as often as possible to inhibit rust and corrosion. To aid you in keeping your motorcycle clean, see your Harley-Davidson dealer for surface care products.

Harley-Davidson recommends the following products:

- SUNWASH (Part No. 94659-98): for general cleaning/washing of all surfaces.

- BUG REMOVER (Part No. 94657-98): for removing bugs from all surface finishes.
- HARLEY SPRAY CLEANER (Part No. 99817-99): all purpose cleaner and quick detailer for metal surfaces.
- HARLEY GLOSS (Part No. 94627-98): all purpose surface protectant provides UV protection and a gloss finish.

⚠WARNING

Observe warnings on labels of cleaning compounds. Failure to follow warnings could result in death or serious injury. (00076a)

⚠WARNING

Do not wash brake discs with cleaners containing chlorine or silicone. Cleaners containing chlorine and silicone can impair brake function, which could result in death or serious injury. (00077a)

CAUTION

Do not use pressure washers to clean wheel bearings, sprocket bearings, steering head bearings and swingarm pivot bearings. Doing so can result in equipment damage. (00489b)

Denim Finish

General

If your vehicle has denim (flat or matte) finish please read below.

- The Denim finish has qualities which differ from high gloss finishes on all other Harley-Davidson motorcycles. Like denim fabric, Denim paint will burnish or mar with age and use, thus adding character and personality to the finish of the motorcycle.
- If scratched, the color coat of paint does nick/scuff and these marks can not be rubbed out.
- If polished, the finish will become less matte and more glossy over time.

How to Clean

1. For heavier deposits:

    a. Use grease cutting dishwashing detergent and a clean H-D wash-mitt. (Dilute the detergent per the instruction provided by its manufacturer.)

    b. Rinse thoroughly with clean water.

2. For light deposits, use glass cleaner (ammonia base) and H-D Soft Cloth. This helps remove finger prints and light soil.

3. For final detailing use H-D Gloss with H-D Soft Cloth.

Leather Care

NOTE:

Many Harley-Davidson accessories and seats are either made of leather or have leather inserts. Natural materials age differently and require different care than man-made materials. Seat covers and panels made of leather will gain "character", such as wrinkles, with age. Leather is porous and organic and each leather product will settle into its own distinct form with use. Your leather product will mature into its own custom shape and style from the sun, rain and the miles. This maturing is natural and will enhance the custom quality of your Harley-Davidson motorcycle.

Leather must be periodically cleaned and treated to maintain its appearance and extend its life. Clean and treat leather once a season or more frequently under adverse conditions.

CAUTION

Do not use bleach or detergents containing bleach on saddlebags, seats, tank panels or painted surfaces. Doing so can result in equipment damage. (00229a)

- Do not use ordinary soap to clean leather or fur. It could dry or remove the oils from the leather.
- Use ONLY a good quality saddle soap to clean leather. Be sure you rinse saddle soap off thoroughly before treating leather.
- Never try to dry leather quickly, using artificial means. Always let leather dry naturally, at room temperature.

1. Vacuum or blow dust off.
2. Thoroughly clean leather with a good quality saddle soap, following manufacturer's directions. Rinse thoroughly with clean sponge or cloth and water. Allow leather to dry.
3. Once leather is dry, treat with a good quality leather treatment, such as LEATHERCARE (Part No. 98261-91).
4. Always allow leather to dry completely before using.

Whitewall Tires

Use a good quality, commercial whitewall cleaner and follow the manufacturer's directions.

Wheel Care

Some vehicle's wheels are aluminum and do not have a protective coating. Other vehicles have laced wheels with chrome plated rims and zinc or chrome plated spokes. Damage from harsh chemicals, acid based wheel cleaners, brake dust and lack of maintenance can occur. Regular washing and the use of a corrosion protectant will help to maintain their original appearance. Harley-Davidson WHEEL AND TIRE CLEANER (Part No. 94658-98) is recommended for cleaning wheels and tires. Then use HARLEY GLOSS (Part No. 94627-98) to protect the wheel surfaces.

NOTES:

- *It is imperative that the wheels are cared for weekly to guard against pitting and corrosion.*
- *Corrosion of these components is not considered to be a defect in materials or workmanship.*

Harley-Davidson recommends the following products:

- WHEEL AND TIRE CLEANER (Part No. 94658-98): cleaner/degreaser for wheels, tires and engine.
- HARLEY GLOSS (Part No. 94627-98): all purpose surface protection the provides UV protection and a gloss finish.

See a Harley-Davidson dealer for cleaning, polishing and waxing products.

Windshields

CAUTION

Polycarbonate windscreens/windshields require proper attention and care to maintain. Failure to maintain polycarbonate properly can result in damage to the windscreen/windshield. (00483d)

- Do not clean in hot sun or high temperature.
- Powdered, abrasive or alkaline cleanser will damage the windscreen/windshield.

CAUTION

Do not use harsh chemicals including rain sheeting products on Harley-Davidson windshields. They can cause dulling or hazing. If you want to use a windshield protectant on your windshield, try Harley Glaze Polish and Sealant (00231a)

CAUTION

Do not use benzine, paint thinner, gasoline or any other type of harsh cleaner on the windshield. Doing so will damage the windshield surface. (00232a)

NOTES:

- *To remove minor surface scratches use NOVUS® No. 2 SCRATCH REMOVER (Part No. 99836-94T).*
- *Covering the windshield with a clean, wet cloth for approximately 15-20 minutes before washing will make dried bug removal easier.*

1. Use mild soap and warm water to wash the windshield.

2. Wipe dry with a soft, clean towel.

NOTE:

To treat your Lexan windshield with water repellent use WINDSHIELD WATER REPELLENT

TREATMENT (Part No. 99841-02).

Troubleshooting

Troubleshooting: General

⚠WARNING

The troubleshooting section of the Owner's Manual is a guide to diagnose problems. Read the service manual before performing any work. Improper repair and/or maintenance could result in death or serious injury. (00080a)

The following checklist of possible operating troubles and their probable causes will be helpful in keeping your motorcycle in good operating condition. More than one of these conditions may be causing trouble and should be carefully checked.

Engine: Sportster Models

Starter Does Not Operate or Does Not Turn Engine Over

1. Engine run switch in OFF position.
2. Ignition switch not ON.
3. Discharged battery or loose or corroded connections (solenoid chatters).
4. Clutch lever not squeezed against handlebar or transmission not in neutral.
5. Jiffy stand not in retracted position (required for international models only).
6. Blown fuse.

Engine Turns Over But Does Not Start

1. Fuel tank empty.
2. Fuel vacuum line disconnected (if applicable).
3. Fuel filter clogged.
4. Discharged battery or loose or broken battery terminal connections.
5. Fouled spark plugs.
6. Spark plug cable connections loose or in bad condition and shorting.
7. Loose or corroded wire or cable connection(s) at coil or battery.
8. Fuel pump inoperative.

9. Blown fuse.

Starts Hard

1. Spark plugs in bad condition, have improper gap, or are partially fouled.
2. Spark plug cables in bad condition and leaking.
3. Battery nearly discharged.
4. Loose wire or cable connection(s) at one of the battery terminals or at coil.
5. Engine oil too heavy (winter operation).
6. Fuel tank vent plugged or fuel line closed off, restricting fuel flow.
7. Water or dirt in fuel system.
8. Fuel pump inoperative.

Starts But Runs Irregularly or Misses

1. Spark plugs in bad condition or partially fouled.
2. Spark plug cables in bad condition and leaking.
3. Spark plug gap too close or too wide.
4. Battery nearly discharged.
5. Damaged wire or loose connection at battery terminals or coils.
6. Intermittent short circuit due to damaged wire insulation.
7. Water or dirt in fuel system or filter.
8. Fuel vent system plugged. See dealer.
9. One or more injectors fouled.

A Spark Plug Fouls Repeatedly

1. Incorrect spark plug.

Pre-ignition or Detonation (Knocks or Pings)

1. Incorrect fuel.
2. Incorrect spark plug for the kind of service.

Overheats

1. Insufficient oil supply or oil not circulating.
2. Heavy carbon deposit from lugging engine. See dealer.
3. Insufficient air flow over cylinder heads during extended periods of idling or parade duty.

Excessive Vibration

1. Rear fork pivot shaft nuts loose. See dealer.
2. Front engine mounting bolts loose. See dealer.
3. Engine to transmission mounting bolts loose. See dealer.
4. Front chain or links tight as a result of insufficient lubrication or belt badly worn.
5. Wheels and/or tires damaged. See dealer.
6. Vehicle not properly aligned. See dealer.

Electrical System

Alternator Does Not Charge

1. Module not grounded. See dealer.
2. Engine ground wire loose or broken. See dealer.
3. Loose or broken wires in charging circuit. See dealer.

Alternator Charge Rate is Below Normal

1. Weak battery.
2. Excessive use of add-on accessories.
3. Loose or corroded connections.
4. Extensive periods of idling or low speed riding.

Transmission

Transmission Shifts Hard

1. Bent shifter rod. See dealer.

Transmission Jumps Out of Gear

1. Worn shifter dogs in transmission. See dealer.

Clutch Slips

1. Clutch controls improperly adjusted. See dealer.
2. Worn friction discs. See dealer.
3. Insufficient clutch spring tension. See dealer.

Clutch Drags or Does Not Release

1. Clutch controls improperly adjusted. See dealer.
2. Primary chaincase overfilled.
3. Clutch discs warped. See dealer.

Clutch Chatters

1. Friction discs or steel discs worn or warped. See dealer.

Brakes

Brakes Do Not Hold Normally

1. Master cylinder low on fluid. See dealer.
2. Brake line contains air bubbles. See dealer.
3. Master or wheel cylinder piston worn. See dealer.
4. Brake pads contaminated with grease or oil. See dealer.
5. Brake pads badly worn. See dealer.
6. Brake disc badly worn or warped. See dealer.
7. Brake fades because of heat build up. Excessive braking or brake pads dragging. See dealer.
8. Brake drags. Insufficient hand lever free play. See dealer.

Warranties and Responsibilities

Warranty and Maintenance

This Owner's Manual contains your new motorcycle warranty.

It is the owner's responsibility to follow the scheduled mileage intervals as specified; all of the specified maintenance services must be performed to keep your warranty valid.

1. Make an appointment with a Harley-Davidson dealer for inspection and service just before you have ridden 1000 miles 1600 kilometers .
2. Bring this Owner's Manual with you when you visit your dealer to have your motorcycle inspected and serviced.
3. Have the dealer technician sign at the proper mileage interval. The records should be retained by the owner as proof of proper maintenance.
4. Keep receipts covering any parts, service or maintenance performed. These records should be transferred to each subsequent owner.

⚠WARNING

Do not use aftermarket parts and custom made front forks which can adversely affect performance and handling. Removing or altering factory installed parts can adversely affect performance and could result in death or serious injury. (00001a)

Harley-Davidson dealerships are independently owned and operated and may sell parts and accessories that are not manufactured or approved by Harley-Davidson. Therefore, you should understand that we are not and cannot be responsible for the quality, suitability, or safety of any non-Harley-Davidson part, accessory or design modification, including labor, which may be sold and/or installed by our dealers.

Keeping It All Harley-Davidson

---

1. Keep your Harley-Davidson completely Harley-Davidson.
2. Insist that your dealer uses only Genuine replacement parts to keep your Harley-Davidson motorcycle and its warranty intact.

Exacting design and stringent testing ensure performance and warranty coverage. Again, insist on Genuine parts for your genuine Harley-Davidson motorcycle.

NOTE:

Installing off-road or competition parts to enhance performance may void all or part of your new motorcycle warranty. See the Harley-Davidson Limited Warranty in this manual or a Harley-Davidson dealer for details.

CAUTION

It is possible to overload your motorcycle's charging system by adding too many electrical accessories. If your combined electrical accessories operating at any one time consume more electrical current than your vehicle's charging system can produce, the electrical consumption can discharge the battery and cause vehicle electrical

system damage. See a Harley-Davidson dealer for advice about the amount of current consumed by additional electrical accessories, or for necessary wiring changes. (00211b)

Important Moving Information

If you move from your present address, or sell your motorcycle, please fill out and mail the post card at the back of this manual. This is necessary in the event that the Company needs to contact the owner concerning information that could affect the safe operation of this motorcycle.

California Evaporative Emission Controls: 2008 Models

All new model year 2008 Harley-Davidson motorcycles sold in the State of California are equipped with an evaporative emission control system. This system is designed to meet the CARB regulations in effect at the time of manufacture.

The system requires a small amount of maintenance. Periodic inspection is required to make sure hoses are properly routed, not kinked or blocked and that all fittings are secure. Mounting hardware should also be checked periodically for tightness.

EPA Noise Regulations in the United States

EPA noise regulations require that the following statements be included in the Owner's Manual.

TAMPERING WITH NOISE CONTROL SYSTEM PROHIBITED: Federal law prohibits the following acts or the causing thereof: (1) The removal or rendering inoperative by any person other than for purposes of maintenance, repair, or replacement of any device or element of design incorporated into any new vehicle for the purpose of noise control prior to its sale or delivery to the ultimate purchaser or while it is in use, or (2) the use of the vehicle after such device or element of design has been removed or rendered inoperative by any person.

AMONG THOSE ACTS PRESUMED TO CONSTITUTE TAMPERING ARE THE ACTS LISTED BELOW.

1. Replacing the muffler(s) and/or the entire exhaust system with parts not certified to be noise legal for street use.
2. Removing or modifying the muffler internal baffles in any way.
3. Replacing the air intake/cleaner assembly with one not certified to be noise legal for street use.
4. Modifying the air intake/cleaner assembly in such a way as to make the vehicle no longer noise legal for street use.

Harley-Davidson recommends that any and all noise related maintenance be done by an authorized Harley-Davidson dealer using genuine Harley-Davidson parts.

Warranty/Service Information

Any authorized Harley-Davidson dealer is responsible for providing the warranty repair work on your motorcycle. If you have any questions regarding warranty obligations contact your selling

dealer.

For normal service work or warranty work under the above conditions, you may obtain the name and location of your nearest U.S. Harley-Davidson dealer by calling 1-800-490-9635 (toll free), in any state except Alaska and Hawaii.

NOTE:

The number shown above is accessible only with a touch-tone phone in the United States.

Reporting Safety Defects in United States

Safety defects must be reported to the National Highway Traffic Safety Administration (NHTSA) and Harley-Davidson.

NHTSA Statement

If you believe that your vehicle has a defect which could cause a crash or could cause injury or death, you should immediately inform the National Highway Traffic Safety Administration (NHTSA) in addition to notifying Harley-Davidson.

If NHTSA receives similar complaints, it may open an investigation, and if it finds that a safety defect exists in a group of vehicles, it may order a recall and remedy campaign. However, NHTSA cannot become involved in individual problems between you, your dealer, or Harley-Davidson.

To contact NHTSA, refer to NHTSA Contacts.

NHTSA Contacts

ITEM	DATA
Phone	Call the Auto Safety Hot Line toll-free at 1-888-DASH-2DOT
Mail	U.S. Department of Transportation, National Highway Traffic Safety Administration, Office of Defects Investigation, NVS-210, 400 7th Street S.W., Washington, D.C. 20590
Web site	www.nhtsa.dot.gov

You can also obtain other information about motor vehicle safety from the hot line.

Owner Transfer Identification Form

When purchasing a pre-owned Harley-Davidson or Buell, we encourage you to submit an Owner Transfer Notification Form. It is critical that new owner information is communicated to Harley-Davidson. New owner information is required to be on file with Harley-Davidson to transfer an Extended Service Plan Contract. Harley-Davidson is also required by the National Traffic and Motor Vehicle Safety Act to notify all owners in the event of a recall. The form may be obtained at any Harley-Davidson dealer.

Required Documentation for Imported Motorcycles

If a Harley-Davidson is imported into the United States, additional documentation is required to be eligible for the United States Manufacturer's Limited Warranty. A Harley-Davidson dealer can provide a form explaining the requirements.

Limited Motorcycle Warranty

2008 HARLEY-DAVIDSON MOTORCYCLE LIMITED WARRANTY

24 Months/Unlimited Miles

Harley-Davidson warrants for any new 2008 Harley-Davidson motorcycle/sidecar that an authorized Harley-Davidson dealer will repair or replace without charge any parts found under normal use to be defective in factory materials or workmanship. Such repair and replacement will be Harley-Davidson's sole obligation and the customer's sole remedy under this warranty.

THERE IS NO OTHER EXPRESS WARRANTY (OTHER THAN THE SEPARATE EMISSIONS AND NOISE WARRANTIES) ON THE MOTORCYCLE. ANY IMPLIED WARRANTY OF MERCHANTABILITY OR FITNESS FOR PARTICULAR PURPOSE IS LIMITED TO THE DURATION OF THIS WARRANTY.

Some states do not allow limitations on how long an implied warranty lasts, so the above limitation may not apply to you.

TO THE FULLEST EXTENT ALLOWED BY LAW, HARLEY-DAVIDSON AND ITS DEALERS SHALL NOT BE LIABLE FOR LOSS OF USE, INCONVENIENCE, LOST TIME, COMMERCIAL LOSS OR OTHER INCIDENTAL OR CONSEQUENTIAL DAMAGES. Some states do not allow the exclusion or limitation of incidental or consequential damages, so the above limitation or exclusion may not apply to you. This warranty gives you specific legal rights, and you may have other rights which vary from state to state.

The following terms and conditions apply to this warranty:

Duration

1. The duration of this limited warranty is twenty four months, starting from the earlier of (a) the date of initial retail purchase and delivery from an authorized Harley-Davidson dealer, or (b) the third anniversary of the last day of the model year of the motorcycle/sidecar. Your dealer will submit an electronic Sales and Warranty Registration form to initiate your warranty.

2. Any unexpired portion of this limited warranty will be transferred to subsequent owners, upon the resale of the motorcycle/sidecar during the warranty period.

Owner's Obligations

To obtain warranty service, return your motorcycle/sidecar at your expense within the warranty period to an authorized dealer. Our dealer should be able to provide warranty service during normal business hours and as soon as possible, depending upon the workload of the dealer's

service department and the availability of necessary parts.

Harley-Davidson Motor Company, P.O. Box 653, Milwaukee, Wisconsin 53201, U.S.A.

Exclusions

This warranty will not apply to any motorcycle/sidecar as follows:

1. Which has not been operated or maintained as specified in the Owner's Manual.
2. Which has been abused, misused, improperly stored, used "off the highway," or used for racing or competition of any kind.
3. Which is not manufactured to comply with the laws of the market in which it is registered.
4. Installing off-road or competition parts to enhance performance may void all or part of your new motorcycle warranty. See a Harley-Davidson dealer for details.

Other Limitations

This warranty does not cover:

1. Parts and labor for normal maintenance as recommended in the Owner's Manual, or the replacement of parts due to normal wear and tear including such items as the following: tires, lubrication, oil and filter change, fuel system cleaning, battery maintenance, engine tune-up, spark plugs, brake, clutch and chain/belt adjustment (including chain replacement).
2. Cosmetic concerns that arise as a result of owner abuse, lack of proper maintenance or environmental conditions (except concerns that result from defects in material or workmanship, which are covered by this warranty for the duration of the warranty period).
3. Any cosmetic condition existing at the time of retail delivery that has not been documented by the selling dealer prior to retail delivery.
4. Defects or damage to the motorcycle caused by alterations outside of Harley-Davidson factory specifications.

Important: Read Carefully

1. Our dealers are independently owned and operated and may sell other products. Because of this, HARLEY-DAVIDSON IS NOT RESPONSIBLE FOR THE SAFETY, QUALITY, OR SUITABILITY OF ANY NON-HARLEY-DAVIDSON PART, ACCESSORY OR DESIGN MODIFICATION INCLUDING LABOR WHICH MAY BE SOLD AND/OR INSTALLED BY OUR DEALERS.
2. This warranty is a contract between you and the manufacturer. It is separate and apart from any warranty you may receive or purchase from the dealer. The dealer is not authorized to alter, modify, or in any way change the terms and conditions of this warranty.
3. Any warranty work or parts replacement authorized by the manufacturer will not preclude the manufacturer from later relying on any exclusion where applicable.

Limited Noise Warranty

2008 HARLEY-DAVIDSON MOTORCYCLE NOISE CONTROL SYSTEM LIMITED WARRANTY

The following warranty applies to the noise control system, is in addition to the MOTORCYCLE LIMITED WARRANTY and EMISSION CONTROL SYSTEM LIMITED WARRANTY, and applies only to motorcycles sold in the U.S.

Harley-Davidson Motor Company warrants that this vehicle is designed and built so as to conform at the time of sale with applicable regulations of the U.S. Environmental Protection Agency (as tested following F-76 Drive-By test procedure) and that it is free from defects in materials and workmanship which would cause this motorcycle not to meet U.S. Environmental Protection Agency Standards within 1 year or 3,730 miles (6,000 kilometers) whichever expires first. Any unexpired portion of this limited warranty will be transferred to subsequent owners, upon the resale of the motorcycle during the warranty period.

THERE IS NO OTHER EXPRESS WARRANTY (OTHER THAN THE SEPARATE MOTORCYCLE AND EMISSIONS WARRANTIES) ON THE MOTORCYCLE. ANY IMPLIED WARRANTY OF MERCHANTABILITY OR FITNESS FOR PARTICULAR PURPOSE IS LIMITED TO THE DURATION OF THIS WARRANTY.

Some states do not allow limitations on how long an implied warranty lasts, so the above limitation may not apply to you.

The warranty period shall begin on the date the motorcycle is delivered to the first retail purchaser or, if the motorcycle is placed in service as a demonstrator or company vehicle prior to sale at retail, on the date it is first placed in service.

THE FOLLOWING ITEMS ARE NOT COVERED BY THE NOISE CONTROL SYSTEM WARRANTY

1. Failures which arise as a result of misuse, alterations, or accident as specified in the Owner's Manual.

2. Replacing, removing, or modifying any portion of the NOISE CONTROL SYSTEM (consisting of the exhaust system and air intake/cleaner assembly) with parts not certified to be legal for street use.

3. Any motorcycle on which the odometer mileage has been changed so that the mileage cannot be determined.

4. TO THE FULLEST EXTENT ALLOWED BY LAW, HARLEY-DAVIDSON AND ITS DEALERS SHALL NOT BE LIABLE FOR LOSS OF USE, INCONVENIENCE, LOST TIME, COMMERCIAL LOSS OR OTHER INCIDENTAL OR CONSEQUENTIAL DAMAGES.

Some states do not allow the exclusion or limitation of incidental or consequential damages, so the above limitation or exclusion may not apply to you.

Other Rights

This warranty gives you specific legal rights, and you may have other rights which vary from state to state.

Recommendations for Required Maintenance

It is recommended that any noise system maintenance be performed by an authorized Harley-Davidson dealer using genuine Harley-Davidson replacement parts. The maintenance, replacement or repair of the noise control system may be performed by any other qualified service outlet or individual. Non-genuine parts may be used only if such parts are certified to comply with U.S. Environmental Protection Agency Standards.

Harley-Davidson Motor Company, P.O. Box 653, Milwaukee, Wisconsin 53201, U.S.A.

Limited Emission Warranty

2008 HARLEY-DAVIDSON EMISSION CONTROL SYSTEM LIMITED WARRANTY

The following warranty applies to the emission control system, is in addition to the LIMITED MOTORCYCLE WARRANTY and NOISE CONTROL SYSTEM LIMITED WARRANTY, and applies only to motorcycles sold in the U.S.

Harley-Davidson Motor Company warrants that this vehicle is designed and built so as to conform at the time of sale with applicable regulations of the U.S. Federal Environmental Protection Agency, and that it is free from defects in materials and workmanship which would cause this motorcycle not to meet U.S. Environmental Protection Agency Standards within 5 years or 18,641 miles (30,000 kilometers) whichever expires first. Any unexpired portion of this limited warranty will be transferred to subsequent owners, upon the resale of the motorcycle during the warranty period.

THERE IS NO OTHER EXPRESS WARRANTY (OTHER THAN THE SEPARATE MOTORCYCLE AND NOISE WARRANTIES) ON THE MOTORCYCLE. ANY IMPLIED WARRANTY OF MERCHANTABILITY OR FITNESS FOR PARTICULAR PURPOSE IS LIMITED TO THE DURATION OF THIS WARRANTY.

Some states do not allow limitations on how long an implied warranty lasts, so the above limitation may not apply to you.

The warranty period shall begin on the date the motorcycle is delivered to the first retail purchaser or, if the motorcycle is placed in service as a demonstrator or company vehicle prior to sale at retail, on the date it is first placed in service.

THE FOLLOWING ITEMS ARE NOT COVERED BY THE EMISSION CONTROL SYSTEM WARRANTY

1. Failures which arise as a result of misuse, alterations, accident or non-performance of maintenance as specified in the Owner's Manual.

2. The replacement of parts (such as spark plugs, fuel and oil filters, etc.) used in required maintenance.

3. Any motorcycle on which the odometer mileage has been changed so that the mileage cannot be determined.

4. TO THE FULLEST EXTENT ALLOWED BY LAW, HARLEY-DAVIDSON AND ITS DEALERS SHALL NOT BE LIABLE FOR LOSS OF USE, INCONVENIENCE, LOST TIME, COMMERCIAL LOSS OR OTHER INCIDENTAL OR CONSEQUENTIAL DAMAGES.

Some states do not allow the exclusion or limitation of incidental or consequential damages, so the above limitation or exclusion may not apply to you.

Other Rights

This warranty gives you specific legal rights, and you may have other rights which vary from state to state.

Recommendations for Required Maintenance

It is recommended that any emission system maintenance be performed by an authorized Harley-Davidson dealer using genuine Harley-Davidson replacement parts. The maintenance, replacement or repair of the emissions control system may be performed by any other qualified service outlet or individual. Non-genuine parts may be used only if such parts are certified to comply with U.S. Environmental Protection Agency Standards.

Harley-Davidson Motor Company, P.O. Box 653, Milwaukee, Wisconsin 53201, U.S.A.

Maintenance Scheduling

Regular Service Intervals

Regular lubrication and maintenance will help keep your new Harley-Davidson operating at peak performance. Your Harley-Davidson dealer knows best how to service your motorcycle with factory approved methods and equipment assuring you of thorough and competent workmanship.

NOTES:

- *Refer to Regular Service Intervals: 2008 Sportster Models. Regular maintenance interval operations are required to keep your new motorcycle warranty in force. The use of other than Harley-Davidson approved parts and service procedures may void the warranty. Any alterations to the emission system components, such as the exhaust system, may be in violation of Federal and State laws.*
- *Refer to Owner's Maintenance Records. When servicing your motorcycle, bring this owner's manual to the dealership and complete information needed in the blank columns listed.*

⚠WARNING

Perform the service and maintenance operations as indicated in the regular service interval table. Lack of regular maintenance at the recommended intervals can affect the safe operation of your motorcycle, which could result in death or serious injury. (00010a)

⚠WARNING

If you operate your motorcycle under adverse conditions (severe cold, extreme heat, very dusty environment, very bad roads, through standing water, etc.), you should perform the regular maintenance intervals more frequently

to ensure the safe operation of your motorcycle. Failure to maintain your motorcycle could result in death or serious injury. (00094a)

Regular Service Intervals: 2008 Sportster Models

ITEM SERVICED	PROCEDURE	1000 MI 1600 KM	5000 MI 8000 KM	10,000 MI 16,000 KM	15,000 MI 24,000 KM	20,000 MI 32,000 KM	25,000 MI 40,000 KM	NOTES
Engine oil and filter	Replace	X	X	X	X	X	X	
Oil lines and brake system	Inspect for leaks	X	X	X	X	X	X	1
Air cleaner	Inspect, service as required	X	X	X	X	X	X	
Tires	Check pressure, inspect tread	X	X	X	X	X	X	
Wheel spokes	Check tightness	X	X	X	X	X	X	1, 4
Transmission lubricant	Replace	X		X		X		
Clutch	Check adjustment	X	X	X	X	X	X	1
Primary chain	Check adjustment	X	X	X	X	X	X	
Rear belt and sprockets	Inspect, adjust belt	X	X	X	X	X	X	1
Throttle, brake and clutch controls	Check, adjust and lubricate	X	X	X	X	X	X	1
Jiffy stand	Inspect and lubricate	X		X		X		1
Fuel lines and fittings	Inspect for leaks	X	X	X	X	X	X	1
Fuel tank filter screen	Clean						X	1
Brake fluid	Check levels and condition	X	X	X	X	X	X	5
Brake pads and discs	Inspect for wear	X	X	X	X	X	X	
Front brake lever pin	Inspect		X	X	X	X		1, 2
	Lubricate						X	1, 2
Brake caliper pins	Inspect		X	X	X	X		1, 2
	Lubricate						X	1, 2
Brake caliper boots and bushings	Inspect		X	X	X	X		1, 2
	Replace						X	1, 2
Rear master cylinder outer boot	Inspect		X	X	X	X	X	1, 2
Brake	Replace brake rubber						X	1, 2

components	components in master cylinders and calipers							
	Lubricate master cylinder pistons						X	1, 2
Spark plugs	Inspect	X	X		X		X	
	Replace					X		
Electrical equipment and switches	Check operation	X	X	X	X	X	X	
Engine idle speed	Check adjustment	X	X	X	X	X	X	1
Front fork oil	Replace							1, 6
Steering head bearings	Adjust	X				X		1
	Lubricate					X		1
Rear fork bearings		Replace every 30,000 MI 48,000 KM						1
Shock absorbers	Inspect	X	X	X	X	X	X	1
Critical fasteners	Check tightness	X		X		X		1
Engine mounts and stabilizer links	Inspect			X		X		1
Battery	Check battery and clean connections							3
Exhaust system	Inspect for leaks, cracks, and loose or missing fasteners or heat shields	X	X	X	X	X	X	3
Road test	Verify component and system functions	X	X	X	X	X	X	
NOTES:	1. Should be performed by an authorized Harley-Davidson dealer, unless you have the proper tools, service data and are mechanically qualified. 2. Replace every four (4) years. 3. Perform annually. 4. Not all vehicles are equipped with spoke wheels. Consult appropriate topic in service manual. 5. Replace every two (2) years. 6. Disassemble, lubricate and inspect every 50,000 miles 80,000 km .							

Owner's Maintenance Records

SERVICE MILE INTERVAL	DATE	DEALER	TECHNICIAN	TECHNICIAN

		NUMBER	NAME	SIGNATURE
1000 MI 1600 KM				
5000 MI 8000 KM				
10,000 MI 16,000 KM				
15,000 MI 24,000 KM				
20,000 MI 32,000 KM				
25,000 MI 40,000 KM				
30,000 MI 48,000 KM				
35,000 MI 56,000 KM				
40,000 MI 64,000 KM				
45,000 MI 72,000 KM				
50,000 MI 80,000 KM				

Service Literature

Refer to Service Literature: 2008 Sportster Models. Visit any Harley-Davidson dealer or go to www.harley-davidson.com to purchase a service or parts manual for your motorcycle. Factory authorized manuals are the most complete and detailed source of information outside of your Harley-Davidson dealer.

Service Literature: 2008 Sportster Models

DOCUMENT	LANGUAGE	PART NUMBER
Service Manual	English	99484-08A
Electrical Diagnostics Manual	English	99495-08A
Service and Electrical Diagnostics Manual	French	99484-08FA
Service and Electrical Diagnostics Manual	German	99484-08GA
Service and Electrical Diagnostics Manual	Spanish	99484-08SA
Service and Electrical Diagnostics Manual	Italian	99484-08IA
Parts Catalog	English	99451-08A

H-D Michigan, Inc. Trademark Information

Harley, Harley-Davidson, H-D, Bar & Shield, Digital Tech, Digital Technician, Destroyer, Deuce, Dyna, Electra Glide, Evolution, Fat Boy, Glaze, Gloss, H-D, H-Dnet.com, HD, Harley, Heritage Softail, Heritage Springer, Low Rider, Night Rod, Night Train, Profile, Revolution, Road Glide, Road King, Rocker, Softail, Sportster, Sun Ray, Sunwash, Tech Link, Twin Cam 88, Twin Cam 88B, Twin Cam 96, Twin Cam 96B, Twin Cam 103, Twin Cam 103B, Twin Cam 110, Twin Cam 110B, Tour-Pak, Screamin' Eagle, Softail, Super Guide, Super Premium, SYN3, Ultra Glide, V-Rod, VRSC, Wide Glide, and Harley-Davidson Genuine Motor Parts and Genuine Motor Accessories are among the trademarks of H-D Michigan, Inc.

Product Registered Marks

Allen, Amp Multilock, Bluetooth, Brembo, Delphi, Deutsch, Dunlop, Dynojet, Fluke, G.E. Versilube, Gunk, Hydroseal, Hylomar, Kevlar, Lexan, Loctite, Lubriplate, Keps, K&N, Magnaflux, Marson Thread-Setter Tool Kit, MAXI fuse, Molex, MPZ, Mulitilock, Novus, Packard, Pirelli, Permatex, Philips, PJ1, Pozidriv, Robinair, S100, Sems, Snap-on, Teflon, Threadlocker, Torca, Torco, TORX, Tufoil, Tyco, Ultratorch, Velcro, X-Acto, and XM Satellite Radio are among the trademarks of their respective owners.