Safety First

Safe Operating Rules: Softail Models

⚠WARNING

Motorcycles are different from other vehicles. They operate, steer, handle and brake differently. Unskilled or improper use could result in loss of control, death or serious injury. (00556c)

- Take a rider training course.
- Read Owner's Manual before riding, adding accessories or servicing.
- Wear a helmet, eye protection and protective clothing.
- Never tow a trailer.

Before operating your new motorcycle it is your responsibility to read and follow the operating and maintenance instructions in this manual, and follow these basic rules for your personal safety.

- Know and respect the rules of the road (see RULES OF THE ROAD section). Carefully read and observe the rules contained in the RIDING TIPS booklet accompanying this Owner's Manual. Read and familiarize yourself with the contents of the MOTORCYCLE HANDBOOK for your state.
- Before starting engine, check for proper operation of brake, clutch, shifter, throttle controls, correct fuel and oil supply.

⚠WARNING

Do not use aftermarket parts and custom made front forks which can adversely affect performance and handling. Removing or altering factory installed parts can adversely affect performance and could result in death or serious injury. (00001a)

- Use only Harley-Davidson approved parts and accessories. Use of certain other manufacturer's performance parts will void your new motorcycle warranty. See your Harley-Davidson dealer for details.

⚠WARNING

Stop the engine when refueling or servicing the fuel system. Do not smoke or allow open flame or sparks near gasoline. Gasoline is extremely flammable and highly explosive, which could result in death or serious injury. (00002a)

When refueling your motorcycle, the following rules should be observed.

- Refuel in a well ventilated area with the engine turned off.
- Remove fuel filler cap slowly.
- Do not smoke or allow open flames or sparks when refueling or servicing the fuel system.
- Do not fill fuel tank above the bottom of the filler neck insert.
- Leave air space to allow for fuel expansion.

⚠WARNING

Do not store motorcycle with gasoline in tank within the home or garage where open flames, pilot lights, sparks or electric motors are present. Gasoline is extremely flammable and highly explosive, which could result in death or serious injury. (00003a)

⚠WARNING

Engine exhaust from this product contains chemicals known to the State of California to cause cancer, and birth defects or other reproductive harm. (00004f)

⚠WARNING

Do not run motorcycle in a closed garage or confined area. Inhaling motorcycle exhaust, which contains poisonous carbon monoxide gas, could result in death or serious injury. (00005a)

⚠WARNING

The jiffy stand locks when placed in the full forward (down) position with vehicle weight on it. If the jiffy stand is not in the full forward (down) position with vehicle weight on it, the vehicle can fall over which could result in death or serious injury. (00006a)

⚠WARNING

Be sure jiffy stand is fully retracted before riding. If jiffy stand is not fully retracted, it can contact the road surface causing a loss of vehicle control, which could result in death or serious injury. (00007a)

- A new motorcycle must be operated according to the special break-in procedure. See Break-in Riding Rules.
- Operate motorcycle only at moderate speed and out of traffic until you have become thoroughly familiar with its operation and handling characteristics under all conditions.

NOTE:

We recommend that you obtain information and formal training in the correct motorcycle riding technique. In the United States, the Motorcycle Safety Foundation® offers beginning and

advanced rider safety courses. Call (949)727-3227 for information.

⚠WARNING

Travel at speeds appropriate for road and conditions and never travel faster than posted speed limit. Excessive speed can cause loss of vehicle control, which could result in death or serious injury. (00008a)

- Do not exceed the legal speed limit or drive too fast for existing conditions. Always reduce speed when poor driving conditions exist. High speed increases the influence of any other condition affecting stability and increases the possibility of loss of control.
- Pay strict attention to road surfaces and wind conditions. Any two wheeled vehicle may be subject to upsetting forces such as wind blasts from passing trucks, holes in the pavement, rough road surfaces, rider control error, etc. These forces may influence the handling characteristics of your motorcycle. If this happens, reduce speed and guide the motorcycle with a relaxed grip to a controlled condition. Do not brake abruptly or force the handlebar. This may aggravate an unstable condition.
- Keep cargo weight concentrated close to the motorcycle and as low as possible to minimize the change in the motorcycle's center of gravity. Distribute weight evenly on both sides of the vehicle and do not load bulky items too far behind the rider or add weight to the handlebars or front forks. Do not exceed maximum specified load in each saddlebag.

NOTE:

New riders should gain experience under various conditions while driving at moderate speeds.

- Operate your motorcycle defensively. Remember, a motorcycle does not afford the same protection as an automobile in an accident. One of the most common accident situations occurs when the driver of the other vehicle fails to see or recognize a motorcycle and turns into the on-coming motorcyclist. Operate only with headlamp on.
- Wear an approved helmet, clothing, and foot gear suited for motorcycle riding. Bright or light colors are best for greater visibility in traffic, especially at night. Avoid loose, flowing garments and scarves.

⚠WARNING

Avoid contact with exhaust system and wear protective clothing that completely covers legs while riding. Exhaust pipes and mufflers get very hot when engine is running and remain too hot to touch, even after engine is turned off. Failure to wear protective clothing could result in burns or other serious injury. (00009a)

- When carrying passengers, it is your responsibility to instruct them on proper riding procedures. (See Riding Tips booklet included in your Harley-Davidson Owner's Kit.)

- Do not allow other individuals, under any circumstances, to operate your motorcycle unless you know they are experienced, licensed riders and are thoroughly familiar with the operation of your particular motorcycle.

- Protect your motorcycle against theft. After parking your motorcycle, lock the steering head and remove ignition key from switch. Set security alarm if present.
- Safe motorcycle operation requires alert mental judgment combined with a defensive driving

attitude. Do not allow fatigue, alcohol or drugs to endanger your safety or that of others.

- Vehicles equipped with a sound system should have the volume adjusted to a nondistracting level before operating vehicle.
- Maintain your motorcycle in proper operating condition in accordance with Regular Service Intervals: 2009 Softail Models. Particularly important to motorcycle stability is proper tire inflation pressure, tread condition, and proper adjustment of wheel bearings and steering head bearings.

⚠WARNING

Do not operate vehicle with forks locked. Locking the forks restricts the vehicle's turning ability, which could result in death or serious injury. (00035a)

⚠WARNING

Perform the service and maintenance operations as indicated in the regular service interval table. Lack of regular maintenance at the recommended intervals can affect the safe operation of your motorcycle, which could result in death or serious injury. (00010a)

⚠WARNING

Do not operate motorcycle with loose, worn or damaged steering or suspension systems. Contact a Harley-Davidson dealer for repairs. Loose, worn or damaged steering or suspension components can adversely affect stability and handling, which could result in death or serious injury. (00011a)

⚠WARNING

Regularly inspect shock absorbers and front forks. Replace leaking, damaged or worn parts that can adversely affect stability and handling, which could result in death or serious injury. (00012a)

⚠WARNING

Use Harley-Davidson replacement fasteners. Aftermarket fasteners can adversely affect performance, which could result in death or serious injury. (00013a)

- See a Harley-Davidson service manual for proper torque values.
- Aftermarket fasteners may not have the specific property requirements to perform properly.

⚠WARNING

Be sure tires are properly inflated, balanced and have

adequate tread. Inspect your tires regularly and see a Harley-Davidson dealer for replacements. Riding with excessively worn, unbalanced or under-inflated tires can adversely affect stability and handling, which could result in death or serious injury. (00014a)

⚠WARNING

Replace punctured or damaged tires. In some cases, small punctures in the tread area may be repaired from within the demounted tire by a Harley-Davidson dealer. Speed should NOT exceed 50 mph (80 km/h) for the first 24 hours after repair, and the repaired tire should NEVER be used over 80 mph (130 km/h). Failure to follow this warning could result in death or serious injury. (00015a)

⚠WARNING

Do not exceed the motorcycle's Gross Vehicle Weight Rating (GVWR) or Gross Axle Weight Rating (GAWR). Exceeding these weight ratings can affect stability and handling, which could result in death or serious injury. (00016e)

- GVWR is the sum of the weight of the motorcycle, accessories, and the maximum weight of the rider, passenger and cargo that can be safely carried.
- GAWR is the maximum amount of weight that can be safely carried on each axle.
- The GVWR and GAWR are shown on the information plate, located on the frame down tube.

⚠WARNING

Do not tow a disabled motorcycle. Towing can adversely affect stability and handling, which could result in death or serious injury. (00017a)

⚠WARNING

Do not pull a trailer with a motorcycle. Pulling a trailer can cause tire overload, reduced braking efficiency and adversely affect stability and handling, which could result in death or serious injury. (00018b)

⚠CAUTION

Direct contact of D.O.T. 4 brake fluid with eyes can cause irritation. Avoid eye contact. In case of eye contact flush with large amounts of water and get medical attention. Swallowing large amounts of D.O.T. 4 brake fluid can cause digestive discomfort. If swallowed, obtain medical attention. Use in well ventilated area. KEEP OUT OF

REACH OF CHILDREN. (00240a)

⚠WARNING

Batteries, battery posts, terminals and related accessories contain lead and lead compounds, and other chemicals known to the State of California to cause cancer, and birth defects or other reproductive harm. Wash hands after handling. (00019e)

⚠WARNING

Wheel weights on wheels without spokes contain lead and lead compounds, chemicals known to the State of California to cause cancer, and birth defects or other reproductive harm. (00356d)

⚠WARNING

Consult a Harley-Davidson dealer regarding any questions or problems that occur in the operation of your motorcycle. Failure to do so can aggravate an initial problem, cause costly repairs, cause an accident and could result in death or serious injury. (00020a)

- Be sure all equipment required by federal, state and local law is installed and in good operating condition.

Rules of the Road

- Always sound your horn, actuate your turn signals, and exercise caution when passing other vehicles going in the same direction. Never try to pass another vehicle going in the same direction at street intersections, on curves, or when going up or down a hill.
- At street intersections give the right-of-way. Do not presume you have the right-of-way, as the other driver may not know it is your turn.
- Always signal when preparing to stop, turn or pass.
- All traffic signs, including those used for the control of traffic at intersections, should be obeyed promptly. SLOW DOWN signs near schools and CAUTION signs at railroad crossings should always be observed and your actions governed accordingly.
- When intending to turn, signal at least 100 feet 30.5 meters before reaching the turning point. If turning across an intersection, move over to the centerline of the street (unless local rules require otherwise). Slow down when entering the intersection and turn carefully.
- Never anticipate a traffic light. When a change is indicated from GO to STOP (or vice versa) in the traffic control systems at intersections, slow down and wait for the light to change. Never run through a yellow or red traffic light.
- While turning either right or left, watch for pedestrians, animals, as well as vehicles.
- Do not leave the curb or parking area without signaling. Be sure your way is clear to enter moving traffic. A moving line of traffic always has the right-of-way.
- Be sure your license plate is installed in the position specified by law and is clearly visible at all times. Keep the plate clean.
- Ride at a safe speed that is consistent with the type of highway you are on. Pay strict

attention to whether the road is dry, oily, icy or wet.
- Watch for debris such as leaves or loose gravel.
- Weather and traffic conditions on the highway dictate adjusting your speed and driving habits accordingly.

Accessories and Cargo: Softail Models

Harley-Davidson Motor Company cannot test and make specific recommendations concerning every accessory or combination of accessories sold. Therefore, the rider must be responsible for safe operation of the motorcycle when installing accessories or carrying additional weight.

CAUTION

The Rocker models (FXCW and FXCWC) have a swing-arm mounted fender. The fender will not support a passenger and should not be fitted with a luggage rack. Damage to the fender could occur. (00557b)

⚠WARNING

See the Accessory and Cargo section in your Owner's Manual. Improper loading of cargo or installation of accessories can affect motorcycle stability and handling, which could result in death or serious injury. (00021a)

⚠WARNING

Do not exceed the motorcycle's Gross Vehicle Weight Rating (GVWR) or Gross Axle Weight Rating (GAWR). Exceeding these weight ratings can affect stability and handling, which could result in death or serious injury. (00016e)

- GVWR is the sum of the weight of the motorcycle, accessories, and the maximum weight of the rider, passenger and cargo that can be safely carried.
- GAWR is the maximum amount of weight that can be safely carried on each axle.
- The GVWR and GAWR are shown on the information plate which is located on the frame down tube.

Accessory and Cargo Guidelines

The following guidelines should be used when equipping a motorcycle, carrying passengers and/or cargo.

⚠WARNING

Travel at speeds appropriate for road and conditions and never travel faster than posted speed limit. Excessive speed can cause loss of vehicle control, which could

result in death or serious injury. (00008a)

- Do not exceed the legal speed limit or drive too fast for existing conditions. Always reduce speed when poor driving conditions exist. High speed increases the influence of any other condition affecting stability and increases the possibility of loss of control.
- Pay strict attention to road surfaces and wind conditions. Any two wheeled vehicle may be subject to upsetting forces such as wind blasts from passing trucks, holes in the pavement, rough road surfaces, rider control error, etc. These forces may influence the handling characteristics of your motorcycle. If this happens, reduce speed and guide the motorcycle with a relaxed grip to a controlled condition. Do not brake abruptly or force the handlebar. This may aggravate an unstable condition.
- Keep cargo weight concentrated close to the motorcycle and as low as possible. This minimizes the change in the motorcycle's center of gravity.
- Distribute weight evenly on both sides of the vehicle.
- Do not load bulky items too far behind the rider or add weight to the handlebars or front forks.
- Do not exceed maximum specified load in each saddlebag.
- Luggage racks are designed for lightweight items. Do not overload racks.
- Be sure cargo is secure and will not shift while riding and recheck the cargo periodically. Accessories that change the operator's riding position may increase reaction time and affect handling of the motorcycle.
- Additional electrical equipment may overload the motorcycle's electrical system possibly resulting in electrical system and/or component failure.

⚠WARNING

The front and/or rear guard(s) can provide limited leg and cosmetic vehicle protection under unique circumstances. (Fall over while stopped, very slow speed slide.) It is not made or intended to provide protection from bodily injury in a collision with another vehicle or any other object. (00022a)

Large surfaces such as fairings, windshields, back rests, and luggage racks can adversely affect handling. Only genuine Harley-Davidson items designed specifically for the motorcycle model should be used with proper installation.

⚠WARNING

Do not use aftermarket parts and custom made front forks which can adversely affect performance and handling. Removing or altering factory installed parts can adversely affect performance and could result in death or serious injury. (00001a)

⚠WARNING

Only Touring Harley-Davidson Motorcycles are suitable for sidecar use. Consult a Harley-Davidson dealer. Use of motorcycles other than Touring models with sidecars could result in death or serious injury. (00040a)

Tampering

Owners are warned that removal or replacement of any noise control system component may be prohibited by law. This prohibition applies prior to vehicle sale or delivery to the ultimate purchaser. Use of a vehicle on which noise control system components have been removed or rendered inoperative may also be prohibited by law.

Identification

Vehicle Identification Number

See V.I.N. Stamping Location. The full 17 digit serial or Vehicle Identification Number (V.I.N.) is stamped on the steering head. In some destinations, a printed V.I.N. label will also be affixed to the right front frame down tube.

An abbreviated V.I.N. is stamped on the left side crankcase at the base of the rear cylinder.

NOTE:

Always give the full 17 digit Vehicle Identification Number when ordering parts or making any inquiry about your motorcycle.

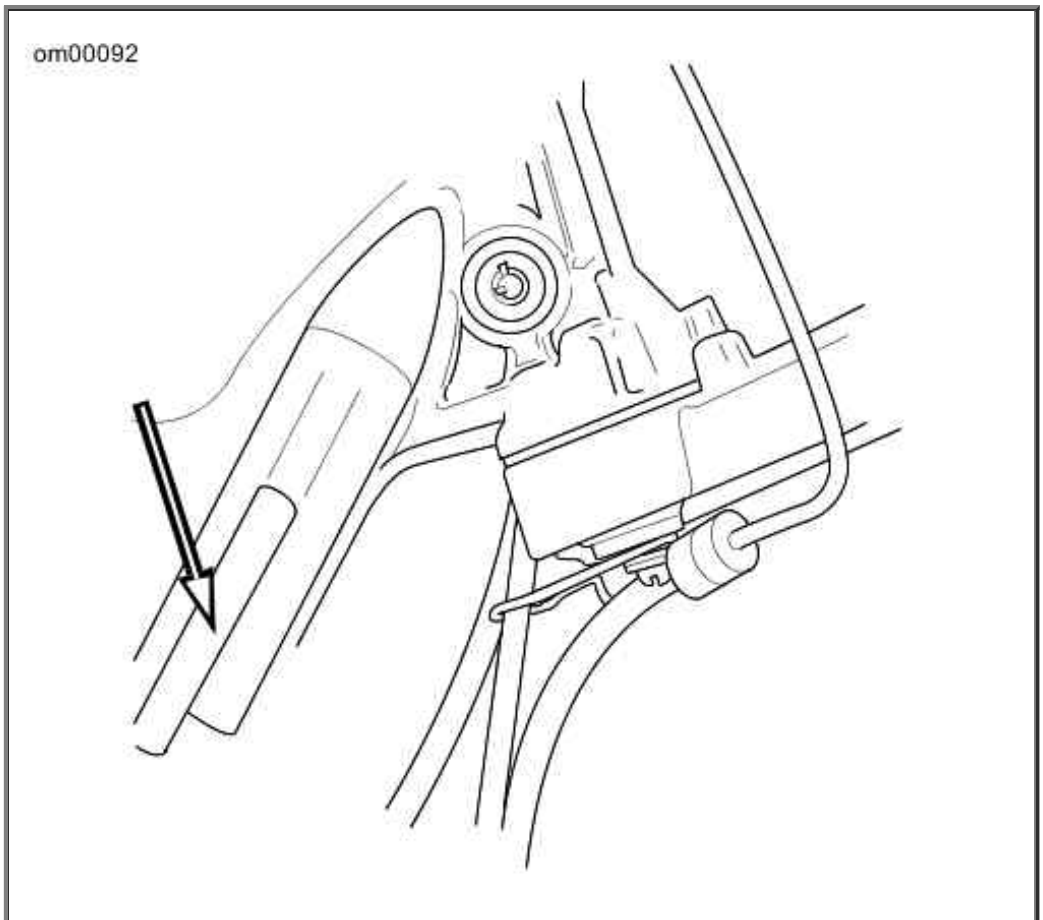

V.I.N. Stamping Location

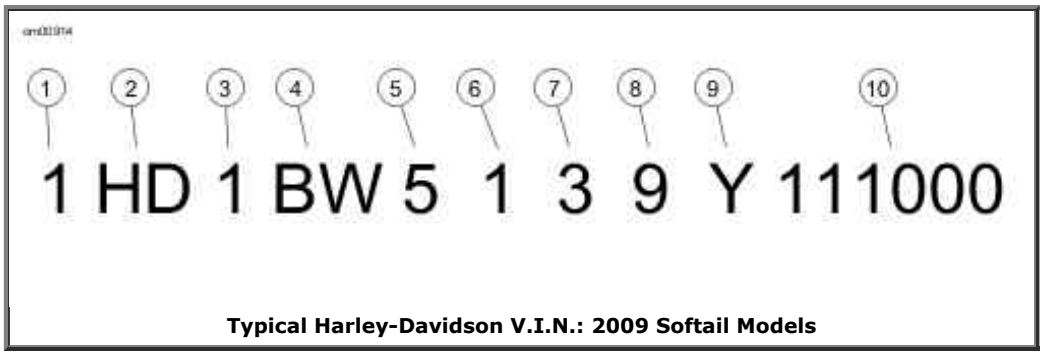

Typical Harley-Davidson V.I.N.: 2009 Softail Models

Harley-Davidson V.I.N. Breakdown: 2009 Softail Models

POSITION	DESCRIPTION	POSSIBLE VALUES
1	Market designation	1=Originally manufactured for sale **within** the United States 5=Originally manufactured for sale **outside** of the United States
2	Manufacturer	HD=Harley-Davidson
3	Motorcycle type	1=Heavyweight motorcycle (901 cc and larger)
4	Model	See V.I.N. model table
5	Engine type	5=Twin Cam 96B™, 1584 cc air-cooled, fuel-injected, balanced
6	Introduction date	1=Regular 2=Mid-year 3=California/regular 4=Cosmetic changes and/or special introductory date 5=California/cosmetic changes and/or special introductory date 6=California/mid-year
7	V.I.N. check digit	Can be 0-9 or X
8	Model year	9=2009
9	Assembly plant	Y=York, PA U.S.A.
10	Sequential number	varies

V.I.N. Model Codes: 2009 Softail Models

CODE	MODEL	CODE	MODEL
BV	FXST Softail® Standard	JG	FLSTF Shrine
BW	FLSTC Heritage Softail® Classic	JH	FLSTC Shrine
BX	FLSTF Fat Boy®	JJ	FXCW Softail Rocker™
JA	FXSTB Night Train®	JK	FXCWC Softail Rocker Custom™
JD	FLSTN Softail® Deluxe	JL	FXSTC Softail Custom™
JE	FLST Heritage Softail® (Brazil only)	JM	FLSTSB Softail® Cross Bones™

Labels

See Labels: Softail Models for safety and maintenance labels which were on the vehicle when new. If removed, replacement labels may be purchased for your motorcycle. Refer to Labels: Softail Models for label descriptions.

NOTE:

Some labels may be available in different languages for destinations outside the U.S. See a Harley-Davidson dealer for all labels available for purchase.

Labels: Softail Models

ITEM	PART NO.	DESCRIPTION	LOCATION
1	29127-95B	General warnings	Top of chrome air cleaner cover
2	29404-01A	General warnings	Top of black air cleaner cover (FXSTB and FLSTSB only)
3	15368-01A	Battery warning	On frame, left of battery
4	72548-08	Fuse block label	Under seat behind battery

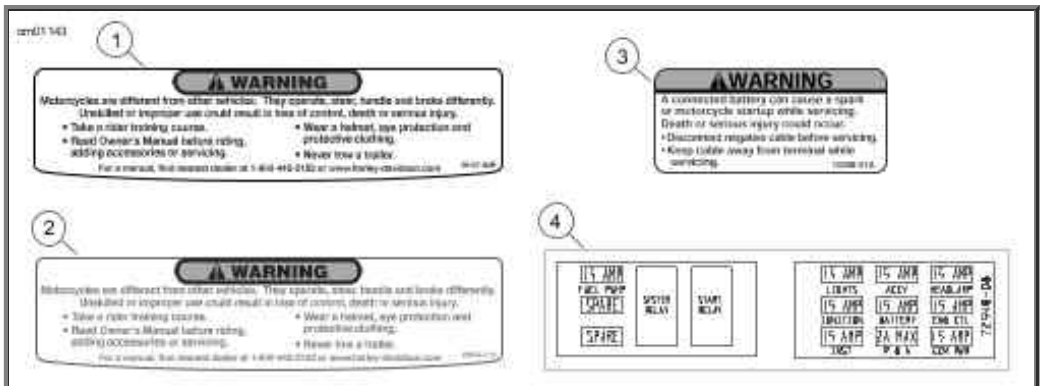

Labels: Softail Models

Specifications

Specifications: 2009 Softail Models

Engine: 2009 Softail Models

ITEM	SPECIFICATION	
Number of cylinders	2	
Type	4-cycle, 45 degree V-Type, air cooled	
Compression ratio	9.2-1	
Bore	3.750 in.	95.25 mm
Stroke	4.380 in.	111.25 mm
Displacement	96.00 cu. in.	1584.00 cu. cm

Ignition System: 2009 Twin Cam Models

COMPONENT	SPECIFICATION	
Ignition timing	Not adjustable	
Battery	12 volt, 19 amp/hr, sealed and maintenance free	
Spark plug type	HD-6R12	
Spark plug size	12 mm	
Spark plug gap	0.038-0.043 in.	0.97-1.09 mm
Spark plug torque	12-18 ft-lbs	16.3-24.4 Nm

NOTE:

Specifications in this publication may not match those of official certification in some markets due to timing of publication printing, variance in testing methods, and/or vehicle differences. Customers seeking officially recognized regulatory specifications for their vehicle should refer to certification documents and/or contact their respective dealer or distributor.

Transmission: 2009 Softail Models

TRANSMISSION	SPECIFICATION
Type	Constant mesh, foot shift
Speeds	6 forward

Sprocket Teeth: 2009 Softail Models

DRIVE	ITEM	NUMBER OF TEETH
Primary	Engine	34
	Clutch	46
Final	Transmission	32
	Rear wheel	66*
*64 teeth on Japanese models		

Engine Torque: 2009 Softail Models

MARKET/MODELS	TORQUE	
North America, FLSTC, FLSTSB, FXCW/C, FXSTB, FXSTC	87.90 ft-lbs @2750 RPM	119.19 Nm @2750 RPM
North America, FLSTF	89.80 ft-lbs @2750 RPM	121.77 Nm @2750 RPM
North America, FLSTN	89.70 ft-lbs	121.63 Nm

	@2750 RPM	@2750 RPM
International, FLSTC, FLSTSB, FXCW/C, FXSTC	86.29 ft-lbs @3200 RPM	117.01 Nm @3200 RPM
International, FLSTF, FLSTN, FXSTB	88.51 ft-lbs @3300 RPM	120.02 Nm @3300 RPM
Japan, FLSTC, FLSTSB, FXSTC	80.39 ft-lbs @2750 RPM	109.01 Nm @2750 RPM
Japan, FLSTF	81.87 ft-lbs @3000 RPM	111.02 Nm @3000 RPM
Japan, FLSTN, FXSTC	82.61 ft-lbs @3000 RPM	112.02 Nm @3000 RPM
Japan, FXCW/C	84.08 ft-lbs @2750 RPM	114.01 Nm @2750 RPM

Gear Ratios: 2009 Softail Models

GEAR	RATIO	
	DOMESTIC AND INTERNATIONAL	JAPANESE MODELS
1st Gear	9.312	9.030
2nd Gear	6.421	6.226
3rd Gear	4.774	4.630
4th Gear	3.926	3.807
5th Gear	3.279	3.179
6th Gear	2.790	2.706

NOTE:

Gross Vehicle Weight Rating (GVWR) (maximum allowable loaded vehicle weight) and corresponding Gross Axle Weight Ratings (GAWR) are given on a label located on the frame below the steering head.

Weights: 2009 FLST, FLSTC, FLSTF, FLSTN and FLSTSB

ITEM	FLST	FLSTC	FLSTF	FLSTN	FLSTSB

	LB.	KG	LB.	KG	LB.	KG	LB.	KG	LB.	KG
Weight as shipped from factory	694.00	314.79	718.00	325.68	694.00	314.79	695.00	315.25	700.00	317.51
GVWR	1160.00	526.17	1160.00	526.17	1160.00	526.17	1160.00	526.17	1140.00	517.10
GAWR front	430.00	195.04	430.00	195.04	430.00	195.04	430.00	195.04	430.00	195.04
GAWR rear	730.00	331.12	730.00	331.12	730.00	331.12	730.00	331.12	710.00	322.05

Weights: 2009 FXCW, FXCWC, FXSTB, FXSTC, and FXST

ITEM	FXCW		FXCWC		FXSTB		FXSTC		FXST	
	LB.	KG	LB.	KG	LB.	KG	LB.	KG	LB.	KG
Weight as shipped from factory	660.90	299.78	686.30	311.30	656.00	297.56	672.00	304.81	654.00	296.65
GVWR	1175.00	532.97	1175.00	532.97	1125.00	510.29	1125.00	510.29	1125.00	510.29
GAWR front	415.00	188.24	415.00	188.24	415.00	188.24	415.00	188.24	415.00	188.24
GAWR rear	760.00	344.73	760.00	344.73	710.00	322.05	710.00	322.05	710.00	322.05

Dimensions: 2009 FLST, FLSTC, FLSTF, FLSTN and FLSTSB

ITEM	FLST		FLSTC		FLSTF		FLSTN		FLSTSB	
	IN.	MM	IN.	MM	IN.	MM	IN.	MM	IN.	MM
Wheel base	64.50	1638.30	64.50	1638.30	64.50	1638.30	64.50	1638.30	64.50	1638.30
Overall length	94.50	2400.30	94.50	2400.30	94.30	2395.22	94.70	2405.38	90.50	2298.70
Overall width	36.20	919.48	37.60	955.04	39.20	995.68	38.60	980.44	38.10	967.74
Road clearance	5.10	129.54	5.10	129.54	5.10	129.54	4.80	121.92	4.90	124.46
Overall height	46.40	1178.56	55.20	1402.08	44.50	1130.30	44.30	1125.22	52.62	1336.68
Saddle height*	25.50	647.70	25.50	647.70	25.40	645.16	24.50	622.30	26.62	676.28
*With 180 lb. 81.6 kg rider on seat										

Dimensions: 2009 FXCW, FXCWC, FXSTB, FXSTC and FXST

ITEM	FXCW		FXCWC		FXSTB		FXSTC		FXST	
	IN.	MM	IN.	MM	IN.	MM	IN.	MM	IN.	MM
Wheel base	69.20	1757.68	69.20	1757.68	66.90	1699.26	66.90	1699.26	64.50	1638.30
Overall length	95.00	2413.00	95.00	2413.00	94.5	2400.30	94.50	2400.30	94.50	2400.30
Overall width	35.10	891.54	35.10	891.54	30.90	784.86	36.50	927.10	36.20	919.48
Road clearance	5.10	129.54	5.10	129.54	5.10	129.54	5.10	129.54	5.10	129.54
Overall height	46.00	1168.40	46.00	1168.40	44.80	1137.92	51.70	1313.18	46.40	1178.56
Saddle height*	24.50	622.30	25.25	641.35	25.20	640.08	26.40	670.56	26.10	662.94
*With 180 lb. 81.6 kg rider on seat										

With 180 lb. 81.6 kg rider on seat.

Capacities: 2009 Softail Models

ITEM	U.S.	LITERS
Fuel tank (total)	5.00 gal	18.93
Low fuel warning light on	1.00 gal	3.79
Oil tank with filter	3.50 qt.	3.31
Transmission (approximate)	1.00 qt.	0.95
Primary chaincase (approximate)	1.00 qt.	0.95

Tire Pressures: 2009 Softail Models

MODEL	LOAD	TIRE PRESSURE (COLD)			
		FRONT		REAR	
		PSI	kPa	PSI	kPa
FLST, FLSTC, FLSTN	solo rider	36	248	36	248
	rider and passenger	36	248	40	276
FLSTF, FLSTSB	solo rider	36	248	38	262
	rider and passenger	36	248	42	290
FXSTC, FXSTB, FXST	solo rider	30	207	38	262
	rider and passenger	30	207	42	290
FXCW, FXCWC	solo rider	30	207	38	262
	rider and passenger	30	207	42	290

Tire Sizes: 2009 Softail Models

MODEL	MOUNT	SIZE	NUMBER
FLST, FLSTSB, FLSTC*	front	16 in.	D402F MT90B16
FLSTN, FLSTC**	front	16 in.	D402F WW MT90B16
FLSTF	front	17 in.	D407F 140/75R17
FXSTB, FXSTC, FXST	front	21 in.	D407F MH90-21
FXCW, FXCWC	front	19 in.	D407F 90/90-19
FLSTSB	rear	17 in.	D401 200/55R17
FLST, FLSTC*	rear	16 in.	D401 150/80B16
FLSTN, FLSTC**	rear	16 in.	D402 WW MU85B16
FLSTF, FXSTB, FXSTC, FXST	rear	17 in.	D407 200/55R17
FXCW, FXCWC	rear	18 in.	D407 240/40R18

2009 vehicles use Dunlop Harley-Davidson tires only.

*For use on FLSTC model with standard blackwall tires.

**For use on FLSTC spoked wheel option with whitewall tires.

Bulb Chart: 2009 Softail Models

LAMP	DESCRIPTION (ALL LAMPS 12 VOLT)	BULBS REQUIRED	CURRENT DRAW (AMPERAGE)		HARLEY-DAVIDSON PART NUMBER	
			FL MODELS	FX MODELS	FL MODELS	FX MODELS
Headlamp	high beam/low beam	1	4.7	4.3	68329-03	68329-03
	position lamp international	1	0.32		53438-92	
Tail and stop lamp (all models except FLSTN, FXCW, FXCWC)	tail/stop lamp	1	0.59/2.10		68167-04	
	tail/stop lamp international	1	0.59/2.10		68167-04	
Tail and stop lamp (FLSTN)	tail/stop lamp	1	0.59/2.10		68168-89A	
	tail/stop lamp international	1	0.59/2.10		68169-90A	
Rear turn signal, tail/stop lamp (FXCW, FXCWC)	Illuminated with LEDs. Replace entire assembly upon failure.					
Turn signal lamp (all models except rear lamps on FXCW, FXCWC)	front/running	2	2.25	0.59	68168-89A	
	front international, FLSTC	2	1.75		68572-64B	
	front international	2	1.75		68163-84	
	rear	2	2.25		68572-64B	
	rear international	2	1.75		68163-84	
Auxiliary lamps	FLST/FLSTC/FLSTN	2	2.50		68453-05	
	Fog lamp international	2	2.92		68847-98	
Fender tip lamp	FLST/FLSTC	2	0.10		68193-95	
Instrument panel lamps	Illuminated with LEDs. Replace entire assembly upon failure.					

Tire Data

WARNING

Match tires, tubes, air valves and caps to the correct wheel rim. Contact a Harley-Davidson dealer. Mismatching can result in damage to the tire bead, allow tire slippage on the

rim or cause tire failure, which could result in death or serious injury. (00023a)

⚠WARNING

Use only Harley-Davidson approved tires. See a Harley-Davidson dealer. Using non-approved tires can adversely affect stability, which could result in death or serious injury. (00024a)

Tubeless tires fitted with the correct size inner tubes may be used on all Harley-Davidson laced (wire spoked) wheels. Protective rubber rim strips must be used with tubeless tires (fitted with correct size inner tubes) when mounted on laced (wire spoked) wheels.

⚠WARNING

Use inner tubes on laced (wire spoked) wheels. Using tubeless tires on laced wheels can cause air leaks, which could result in death or serious injury. (00025a)

Tubeless tires are used on all Harley-Davidson cast and disc wheels.

Tire sizes are molded on the tire sidewall. Inner tube sizes are printed on the tube.

⚠WARNING

Harley-Davidson front and rear tires are not the same. Interchanging front and rear tires can cause tire failure, which could result in death or serious injury. (00026a)

⚠WARNING

Do not inflate tire beyond maximum pressure as specified on sidewall. Over inflated tires can blow out, which could result in death or serious injury. (00027a)

⚠WARNING

Harley-Davidson tires are equipped with wear bars that run horizontally across the tread. When wear bars become visible and only 1/32 in. (0.8 mm) tread depth remains, replace tire immediately. Using a worn tire can adversely affect stability and handling, which could result in death or serious injury. Use only Harley-Davidson approved replacement tires. (00090b)

See Specifications: 2009 Softail Models for tire pressures and sizes.

Gasoline Blends

Your motorcycle was designed to get the best performance and efficiency using unleaded gasoline. Most gasoline is blended with alcohol and/or ether to create oxygenated blends. The type and amount of alcohol or ether added to the fuel is important.

CAUTION

Do not use gasoline that contains methanol. Doing so can result in fuel system component failure, engine damage and/or equipment malfunction. (00148a)

- Gasoline containing METHYL TERTIARY BUTYL ETHER (MTBE): Gasoline/MTBE blends are a mixture of gasoline and as much as 15% MTBE. Gasoline/MTBE blends can be used in your motorcycle.
- ETHANOL is a mixture of 10% ethanol (Grain alcohol) and 90% unleaded gasoline. Gasoline/ethanol blends can be used in your motorcycle if the ethanol content does **not** exceed 10%.
- REFORMULATED OR OXYGENATED GASOLINES (RFG): Reformulated gasoline is a term used to describe gasoline blends that are specifically designed to burn cleaner than other types of gasoline, leaving fewer tailpipe emissions. They are also formulated to evaporate less when you are filling your tank. Reformulated gasolines use additives to oxygenate the gas. Your motorcycle will run normally using this type of gas and Harley-Davidson recommends you use it when possible, as an aid to cleaner air in our environment.
- Do not use race gas or octane boosters. Use of these fuels will damage the fuel system.

Some gasoline blends might adversely affect the starting, driveability or fuel efficiency of the motorcycle. If any of these problems are experienced, try a different brand of gasoline or gasoline with a higher octane blend.

Fuel

Refer to Octane Ratings. Always use a good quality unleaded gasoline. Octane ratings are usually found on the pump.

⚠WARNING

Avoid spills. Slowly remove filler cap. Do not fill above bottom of filler neck insert, leaving air space for fuel expansion. Secure filler cap after refueling. Gasoline is extremely flammable and highly explosive, which could result in death or serious injury. (00028a)

⚠WARNING

Use care when refueling. Pressurized air in fuel tank can force gasoline to escape through filler tube. Gasoline is extremely flammable and highly explosive, which could result in death or serious injury. (00029a)

Modern service station pumps dispense a high flow of gasoline into a motorcycle fuel tank making air entrapment and pressurization a possibility.

Octane Ratings

SPECIFICATION	RATING
Pump Octane (R+M)/2	91 (95 RON)

Catalytic Converters

Some motorcycles are equipped with catalytic converters.

CAUTION

Do not operate catalytic converter-equipped vehicle with engine misfire or a non-firing cylinder. If you operate the vehicle under these conditions, the exhaust will become abnormally hot, which can cause vehicle damage, including emission control loss. (00149a)

CAUTION

Use only unleaded fuel in catalytic converter-equipped motorcycles. Using leaded fuel will damage the emission control system. (00150b)

Controls and Indicators

General: Controls and Indicators

⚠WARNING

Read the CONTROLS AND INDICATORS section before riding your motorcycle. Failure to understand the operation of the motorcycle could result in death or serious injury. (00043a)

Some features explained are unique to certain models. These features may be available as accessories for your Harley-Davidson motorcycle. See a Harley-Davidson dealer for a complete list of accessories that will fit your specific motorcycle.

Ignition/Headlamp Key Switch: Softail Models

General

⚠WARNING

The automatic-on headlamp feature provides increased

visibility of the rider to other motorists. Be sure headlamp is on at all times. Poor visibility of rider to other motorists can result in death or serious injury. (00030b)

Refer to Ignition/Headlamp Switch Positions: Softail Models. The ignition/headlamp key switch controls electrical functions of the motorcycle.

See the YOUR OWNER'S MANUAL section at the front of this book. Be sure to record all your key numbers in the space provided.

NOTE:

The lamps work when the switch is in the IGNITION position, as required by law in some localities.

CAUTION

Protect your vehicle against theft. After parking your motorcycle, lock the steering head and remove ignition key from switch. Failure to lock your motorcycle may result in theft and/or equipment damage. (00151a)

⚠WARNING

Do not operate vehicle with forks locked. Locking the forks restricts the vehicle's turning ability, which could result in death or serious injury. (00035a)

CAUTION

Do not lubricate barrel locks with petroleum based lubricants or graphite. Inoperative locks may result. (00152a)

All Models Except FXCW and FXCWC

See Ignition/Headlamp Key Switch: Softail Models (Except FXCW/FXCWC). The ignition switch is located on the instrument panel on top of the tank. Rotate switch to desired position. Refer to Ignition/Headlamp Switch Positions: Softail Models for ignition switch functions.

The switch can be locked in the OFF or ACC position. To lock the switch, raise the switch cover, insert key, and turn counterclockwise to LOCK position. To unlock the switch, insert key and turn clockwise to UNLOCK position. Remove the key.

NOTE:

Harley-Davidson recommends removing key from ignition switch before operating motorcycle. If you do not remove key, it can fall out during operation.

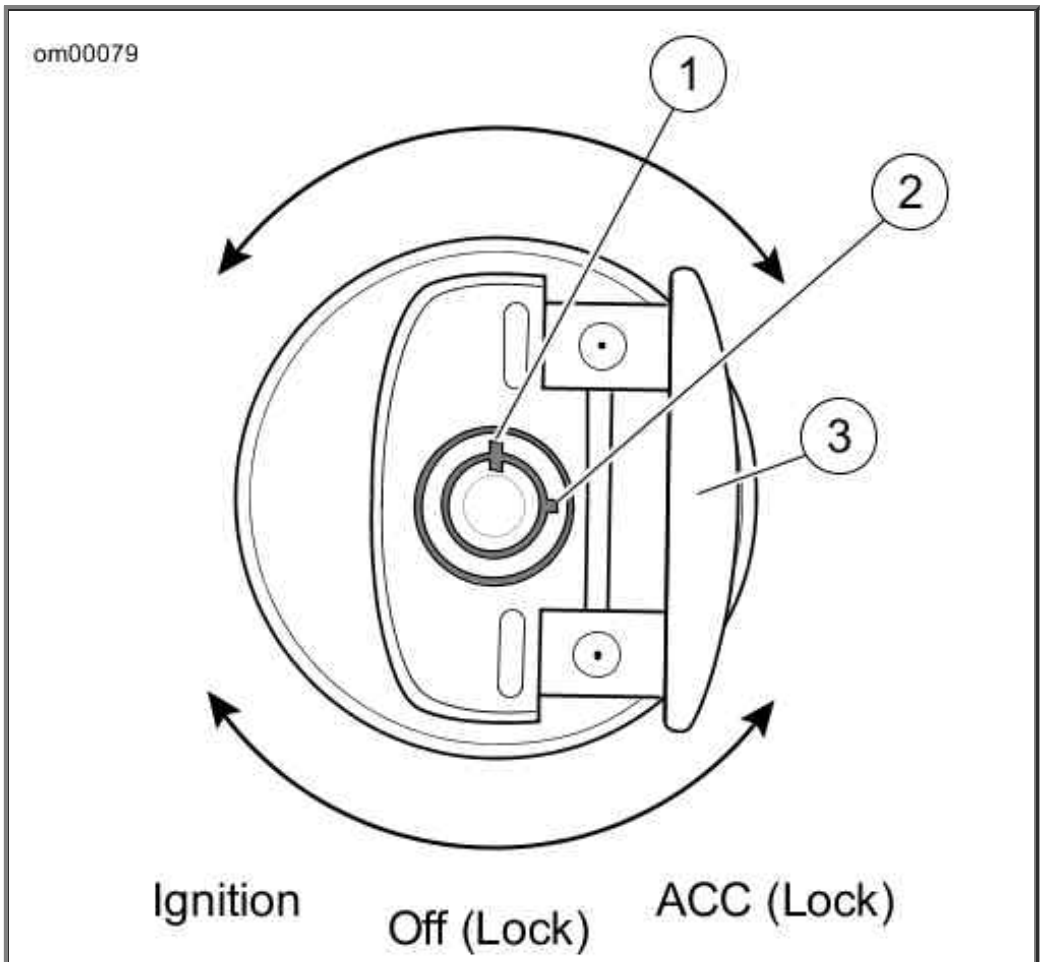

1. Lock position
2. Unlock position
3. Open switch cover

Ignition/Headlamp Key Switch: Softail Models (Except FXCW/FXCWC)

FXCW and FXCWC Models

See Ignition/Headlamp Key Switch: FXCW/FXCWC Models. The ignition switch is located on the left side of the vehicle between the engine cylinders.

To operate, insert key and turn to desired position. The key can be removed while in the OFF or ACC positions. Refer to Ignition/Headlamp Switch Positions: Softail Models for ignition switch functions.

Use only the ignition key in the switch when riding the motorcycle. Riding with a key attached to a keychain or fob can damage the cosmetic surface of the ignition coil.

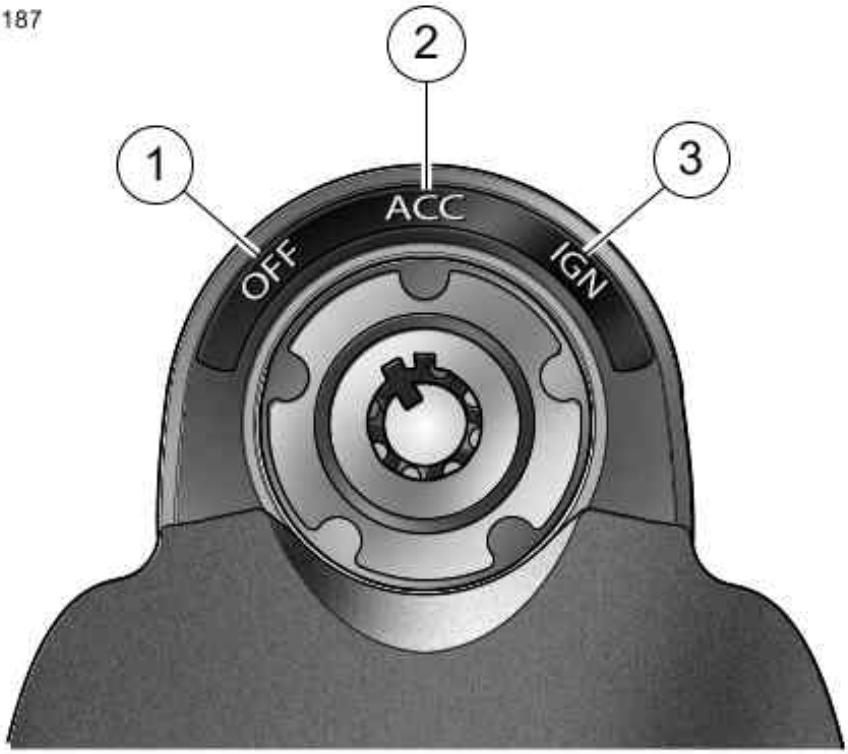

1. Off
2. Accessory
3. Ignition

Ignition/Headlamp Key Switch:

FXCW/FXCWC Models

Ignition/Headlamp Switch Positions: Softail Models

SWITCH POSITION	FUNCTION
OFF	Ignition, lamps and accessories are off.
ACC*	Accessories are on. Hazard warning flashers can be operated. Instrument lamps are on. Brake lamp and horn can be activated.
IGNITION*	Ignition, lamps and accessories are on.
*International models have an additional function - position lamp and tail lamp are also on.	

Hand Controls: Basic Operation

Electric Starter Switch

NOTE:

Off/Run switch MUST be in RUN position to operate engine.

See Handlebar Controls. The electric starter switch is located on the right handlebar control group. See Starting the Engine for detailed operation procedures.

1. Put the engine off/run switch in the RUN position and the transmission in neutral. Neutral (green) indicator lamp should be illuminated.

2. See Ignition/Headlamp Key Switch: Softail Models (Except FXCW/FXCWC). Turn ignition/headlamp key switch to IGNITION and push the START switch to operate starter motor.

Engine OFF/RUN Switch

See Handlebar Controls. The engine off/run switch (7) turns the ignition power ON or OFF. The engine off/run switch is located on the right handlebar control. Push the top portion of the engine off/run switch to turn off ignition power and shut the engine off. Push the bottom portion of the engine off/run switch to turn on ignition power.

NOTES:

- *The engine off/run switch must be in the RUN position to start or operate the engine.*
- *The engine off/run switch should be used to shut the engine off.*

1. To shut the engine off, push the top of the off/run switch to the ignition OFF position.

2. See Ignition/Headlamp Key Switch: Softail Models (Except FXCW/FXCWC). Turn the ignition key to the OFF position to turn the ignition power completely OFF.

Throttle Control Grip

See Handlebar Controls. The throttle control grip (9) is located on the right handlebar control and is operated with the right hand.

To reduce rider fatigue on long trips, a spring loaded throttle friction adjustment screw (10) is located at the bottom of the throttle grip clamp on non-cruise equipped models.

1. Slowly turn throttle control grip clockwise (toward the front of the bike) to close the throttle (decelerate).

2. Slowly turn throttle control grip counterclockwise (toward rear of bike) to open the throttle (accelerate).

⚠WARNING

Do not tighten throttle friction adjustment screw to the point where the engine will not return to idle automatically. Over-tightening can lead to loss of vehicle control, which could result in death or serious injury. (00031b)

3. Unscrew the throttle friction adjustment screw so the throttle returns to the idle position when the hand is removed from the grip.

4. Screw the throttle adjustment screw in to increase friction on grip. This provides a damping effect on throttle motion.

NOTE:

The throttle friction adjustment screw should not be used under normal stop and go operating conditions.

Clutch Hand Lever

⚠WARNING

Do not position fingers between hand control lever and handlebar grip. Improper hand positioning can impair control lever operation and cause loss of vehicle control, which could result in death or serious injury. (00032a)

See Handlebar Controls. The clutch hand lever (1) is located on the left handlebar and is operated with the fingers of the left hand.

1. Slowly pull clutch hand lever in against handlebar grip to fully disengage clutch.
2. Shift to first gear using the gear shifter lever. See Gear Shift Lever.
3. Slowly release the clutch hand lever to engage clutch.

A clutch switch is incorporated into the left handlebar switch assembly. It enables the rider to start the vehicle in any gear (or in neutral) as long as the clutch lever is pulled in. If the clutch is not disengaged, the vehicle will not start.

Horn Switch

See Handlebar Controls. The horn is operated by pushing on the horn switch (2) located on the left handlebar control group.

Headlamp Dimmer Switch

See Handlebar Controls. The headlamp dimmer switch (3) is located on the left handlebar. The switch has two positions to activate the headlamps high or low beams.

- Press the top of the headlamp dimmer beam switch to activate the high beam.
- Press the bottom of the headlamp dimmer switch to return to the low beam.

See Indicator Lamps. The (blue) high beam indicator lamp will illuminate when the high beam is on.

Turn Signal Switches

See Handlebar Controls. Each handlebar control group contains a turn signal switch.

- The right turn signal switch (11) operates the right front and right rear flashing lamps.
- The left turn signal switch (4) operates the left front and left rear flashing lamps.

NOTE:

Front turn signal lamps also function as running lamps (except International models).

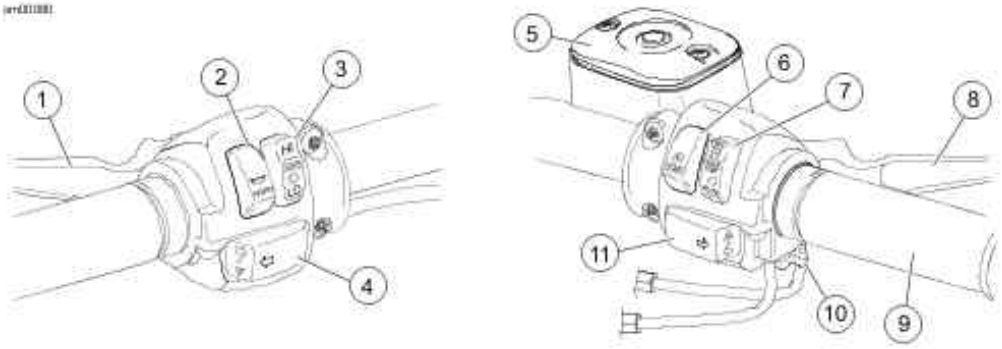

1. Clutch hand lever
2. Horn switch
3. Headlamp dimmer switch
4. Left turn signal switch
5. Master cylinder reservoir
6. Electric starter switch
7. Engine off/run switch
8. Brake hand lever
9. Throttle control grip
10. Throttle friction adjusting screw
11. Right turn signal switch

Handlebar Controls

Turn Signal Switch Operation

The turn signal switches are used by the turn signal module to control turn signal operation based on vehicle speed, vehicle acceleration and turn completion.

Momentarily depress the desired turn signal switch. The turn signal lamps will begin and continue flashing until they are manually or automatically cancelled. As long as the motorcycle is stationary, the signals will flash.

NOTES:

- *If you are signaling to turn in one direction and you depress the switch for the opposite turn signal, the first signal is cancelled and the opposite side begins flashing.*
- *If you want to stop the lamps from flashing, briefly depress the turn signal switch a second time. The turn signal lamps will stop flashing.*

Hazard Warning 4-Way Flasher

Use the following method to activate the four-way flashers.

1. With the ignition key ON and security system disarmed (if equipped), press the left and right turn signal switches at the same time.

2. Turn the ignition key OFF and arm the security system if present and desired. The four-way flashers will continue for two hours.

3. To cancel four-way flashing, disarm the security system if necessary, turn the ignition key ON and press the left and right turn signal switches at the same time.

This system allows a stranded vehicle to be left in the four-way flashing mode and secured until help is found.

Indicator Lamps

See Indicator Lamps. Five indicator lamps are provided.

- The green TURN indicators will flash when turn signals are activated; therefore, flashing indicates the chosen turn direction. When the 4-way hazard flashers are operating, both turn indicators will flash simultaneously.
- The blue BEAM indicator lamp, when lit, signals high beam headlamp operation.
- The green NEUTRAL lamp, when lit, signals the transmission is in neutral gear.
- The red OIL indicator lamp, when lit, signals that oil is not circulating through the engine.

NOTE:

The OIL indicator lamp will glow when the ignition is turned on prior to starting engine. With engine running, lamp should be off when engine speed is above idle.

Several other circumstances that could cause the red oil indicator lamp to signal, include the following:

- If the oil pressure indicator lamp does not go off at speeds above idling, it is usually because of an empty oil tank or diluted oil.
- In freezing weather the oil feed may clog with ice and sludge, preventing oil circulation.
- A grounded oil signal switch wire.
- A faulty signal switch.
- A damaged or improperly installed check valve.
- Trouble with the pump.

CAUTION

If the oil pressure indicator lamp remains lit, always check the oil supply first. If the oil supply is normal and the lamp is still lit, stop the engine at once and do not ride further until the trouble is located and the necessary repairs are made. Failure to do so may result in engine damage. (00157a)

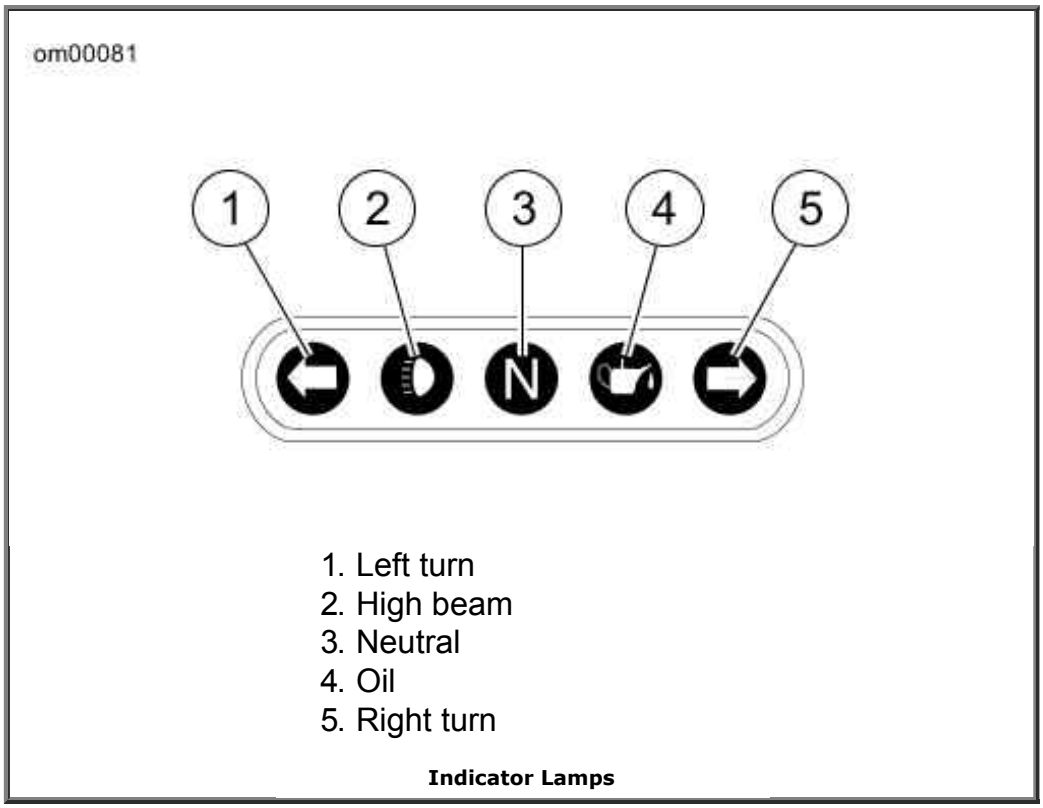

Indicator Lamps

Instruments: Softail Models

Speedometer

⚠WARNING

Travel at speeds appropriate for road and conditions and never travel faster than posted speed limit. Excessive speed can cause loss of vehicle control, which could result in death or serious injury. (00008a)

See Speedometer/Odometer: Softail Models (typical) and Instruments: FLSTC, FLSTSB Models. The speedometer registers miles per hour (U.S. models only) or kilometers per hour (international models only) of forward speed. The speedometer also provides the following selectable functions:

- Odometer
- Trip odometers A and B
- 12 or 24 hour clock
- Fuel range function

The speedometer has a single display window for the above functions.

1. See Speedometer/Odometer: Softail Models (typical) and Instruments: FLSTC, FLSTSB Models. Pressing the function switch with the ignition switch in any position will activate the odometer reading and time. Time and mileage or kilometers may be checked without unlocking ignition switch. Press and release function switch once to view odometer. Press and release switch again to display time.

2. To check mileage on trip odometers, the ignition switch must be in the ACC or IGNITION

position. Press and release the function switch until the desired trip odometer reading is displayed. An A or B in the upper left of the display window identifies trip odometers.

3. To reset or zero trip odometers, have desired (A or B) odometer in display window. Press function switch and hold switch for 2-3 seconds. The trip odometer will be reset to zero.

4. Repeat the previous step if you wish to zero both trip odometers.

Setting Clock

1. Turn the ignition switch to ACC or IGNITION.

2. See Speedometer/Odometer: Softail Models (typical) and Instruments: FLSTC, FLSTSB Models. Press function switch until time (hour and minutes) is displayed. Press and hold the function switch for five seconds or until 12HR begins to blink in the speedometer display window. Release the button.

3. Press and release the function switch once to advance to a blinking 24HR or military style time display. Each time you press and release the button, the display will switch between 12HR and 24HR.

4. When the desired time style is displayed, press and hold the function switch for five seconds. The display will switch to the time display with the hours blinking.

   NOTE:

   There is no AM or PM time setting required. So when correct hour is reached, press and hold function switch to advance to minute setting.

5. Press and release the function switch repeatedly to advance the hours. Each time you press and release the switch, the display will advance one hour.

6. When the correct hour is displayed, press and hold the function switch for five seconds. The minutes display will start blinking.

7. Press and release the function switch repeatedly to advance the minutes display. Each time you press and release the button, the display will advance one minute.

8. When the correct minutes are displayed, press and hold the function switch for five seconds. The minutes display will stop blinking, indicating that the clock has been set.

9. Turn the ignition switch OFF.

Tip Indicator

⚠WARNING

If tip occurs, check all controls for proper operation. Restricted control movement can adversely affect the performance of the brakes, clutch or ability to shift, which could result in loss of vehicle control and death or serious injury. (00350a)

Should motorcycle be tipped over, the word "tip" will appear in the odometer window. Engine will not start until reset. To reset, cycle ignition/headlamp key switch ON-OFF-ON.

Fuel Range Function

The fuel range function shows the approximate mileage available with the amount of fuel left in the fuel tank.

1. With the ignition switch in the ACC or IGNITION position, press function switch until fuel range function is displayed, as indicated by the letter 'r' in the left side of the odometer display. The calculated remaining distance (miles or kilometers) to empty is displayed, based on the amount of fuel in tank. Range can be accessed at any time using the function switch.

2. When the low fuel warning lamp illuminates, the range feature will automatically be displayed in the odometer unless this automatic pop-up feature is disabled by a press and hold of the function switch while in range display mode. Automatic range pop-up feature will show that it is disabled by blinking twice. Likewise, automatic range popup can be reactivated by a press and hold of the function switch. Range will blink once when the automatic pop-up feature is re-enabled.

   NOTE:
   - *When the low fuel warning lamp turns on, there is approximately 1.00 gallon 3.79 liters of fuel remaining in the tank. Refuel as soon as possible.*
   - *The range display is only updated when the vehicle is moving.*

3. After the range calculation reaches 10 miles 16 kilometers remaining, the range display will display "r Lo" to indicate that the vehicle will shortly run out of fuel.

4. Resetting the low fuel warning lamp and range requires an ignition cycle change.

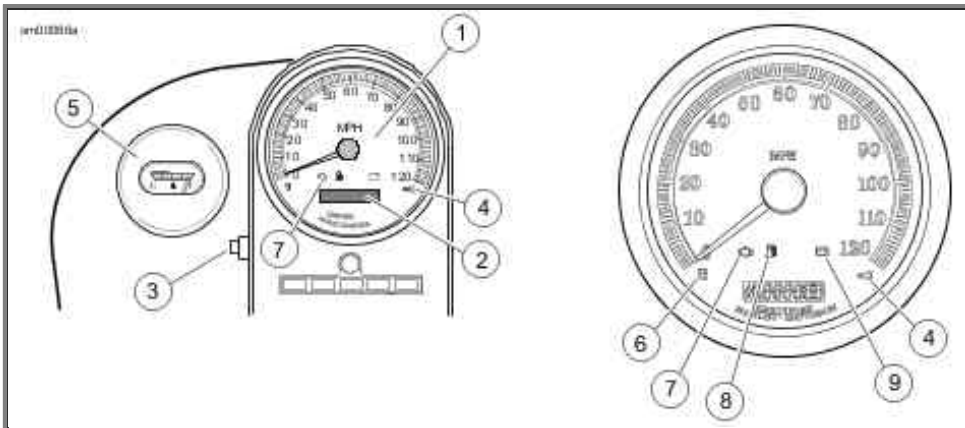

1. Speedometer
2. Tripodometer/Odometer
3. Function switch
4. Security system lamp
5. Fuel gauge
6. Sixth gear lamp
7. Check engine lamp
8. Low fuel warning lamp
9. Battery lamp

Speedometer/Odometer: Softail Models (typical)

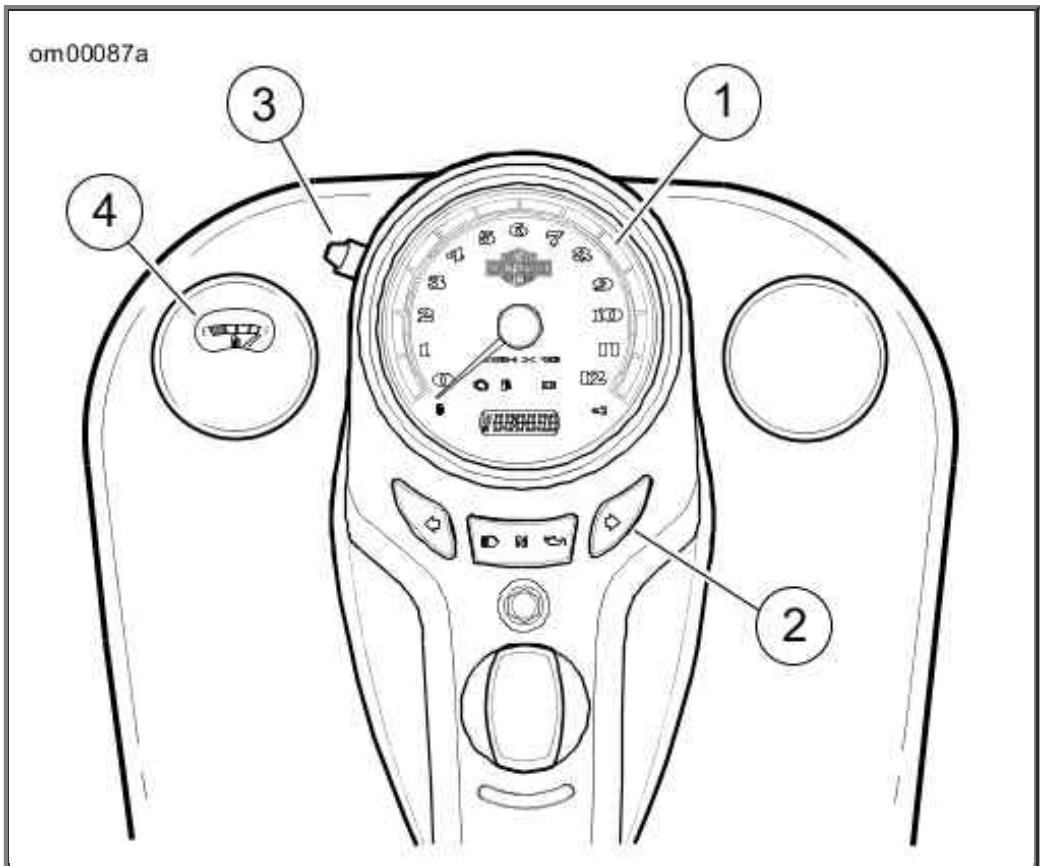

1. Speedometer (domestic shown)
2. Indicator lamps
3. Function switch
4. Fuel gauge

Instruments: FLSTC, FLSTSB Models

Warning Lamps

Check Engine Lamp

See Speedometer/Odometer: Softail Models (typical). The engine check lamp is located inside the instrument cluster. Its purpose is to indicate whether or not the engine/engine management system is operating normally. The engine lamp color is amber.

The engine lamp normally comes on when the ignition is first turned on and remains on for approximately 4 seconds, as the engine management system runs a series of self-diagnostics.

If the engine lamp comes on at any other time, see a Harley-Davidson dealer.

Low Fuel Lamp

See Speedometer/Odometer: Softail Models (typical). There is a low fuel warning lamp within the instrument cluster. The low fuel lamp lights up to indicate that there is approximately 1.00 gallon 3.79 liters of gasoline left in the tank. The low fuel lamp color is amber.

Battery Lamp

See Speedometer/Odometer: Softail Models (typical). The battery lamp indicates either overcharging or undercharging of the battery. Refer to Harley-Davidson Smart Security System.

Security System Lamp

See Speedometer/Odometer: Softail Models (typical). The security system lamp will illuminate when the security system is armed. Refer to Harley-Davidson Smart Security System.

Gear Shift Lever

CAUTION

The clutch must be fully disengaged before attempting a gear shift. Failure to fully disengage the clutch can result in equipment damage. (00182a)

See Upshift Pattern: Six Speed. The gear shift lever is located on the left side of the motorcycle and is operated with the left foot. The transmission is a six speed sequential gear box.

1. Push the gear shift lever all the way down (full stroke) to shift the transmission to the next lower gear.

2. Lift the gear shift lever all the way up (full stroke) to shift the transmission to the next higher gear.

   NOTES:
   - *Release the gear shift lever after each gear change.*
   - *The lever must return to its central position before another gear change can be made.*

First gear is the last gear position that can be found by pushing the gear shift lever full stroke downward.

Neutral is located between first and second gear. The green neutral indicator lamp on the dash will illuminate when the transmission is in neutral.

To shift from first gear to neutral, lift the gear shift lever 1/2 of its full stroke.

When the motorcycle is standing still and the engine is not running, shifting gears requires a different technique. Before shifting in this condition, move the motorcycle backward and forward with the clutch fully disengaged (clutch lever pulled in). While maintaining slight pressure on the shift lever, shift from one gear to another.

Even with the engine running and the motorcycle standing still, difficulty may be experienced in shifting gears. This difficulty occurs because transmission gears are not turning and shifting parts are not lined up to permit engagement.

CAUTION

When difficulty of shifting gears is experienced, do not under any circumstances, attempt to force the shift. The

results of such abuse will be a damaged or broken shifter mechanism. (00161a)

See Shifting Gears for more information.

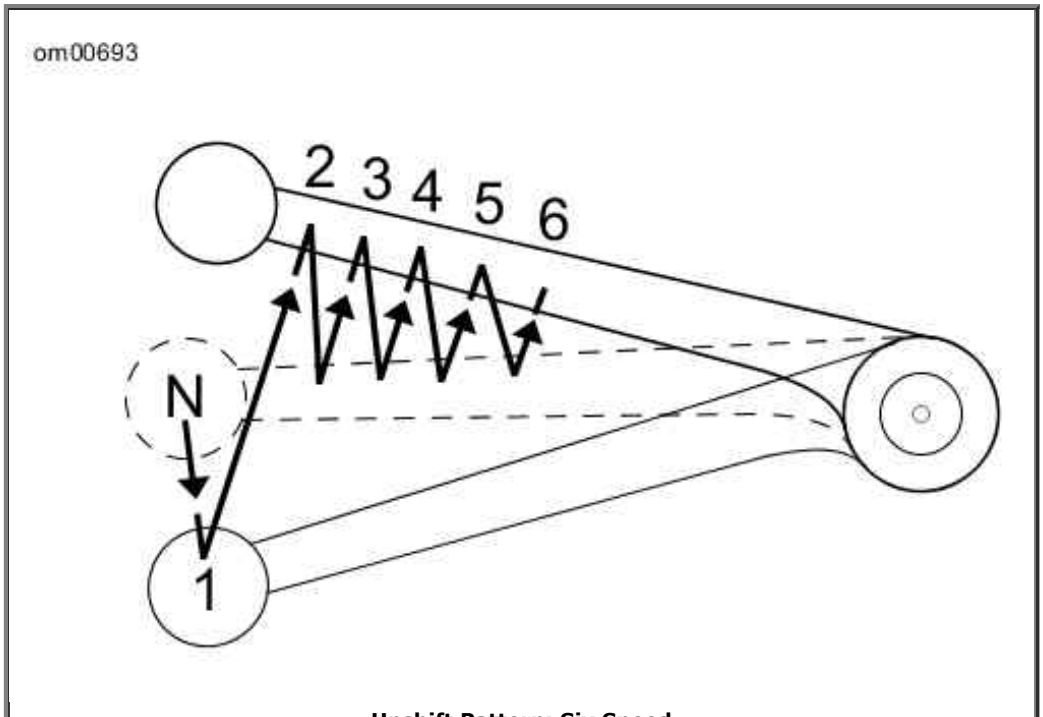

Upshift Pattern: Six Speed

Heel-Toe Foot Shifter

See Heel-Toe Foot Shift Lever. Some motorcycles have a heel-toe shifter lever. With this shift lever, upshifts can be made with the heel of the left foot. Downshifts can be made with the toe.

- Pushing heel-toe foot shift lever all the way down (full stroke) shifts the transmission to the next lower gear.
- Lifting the foot shift lever all the way up (full stroke) shifts the transmission into the next higher gear.

Release the foot shift lever after each gear change. This allows the lever to return to its central position before another gear change can be made.

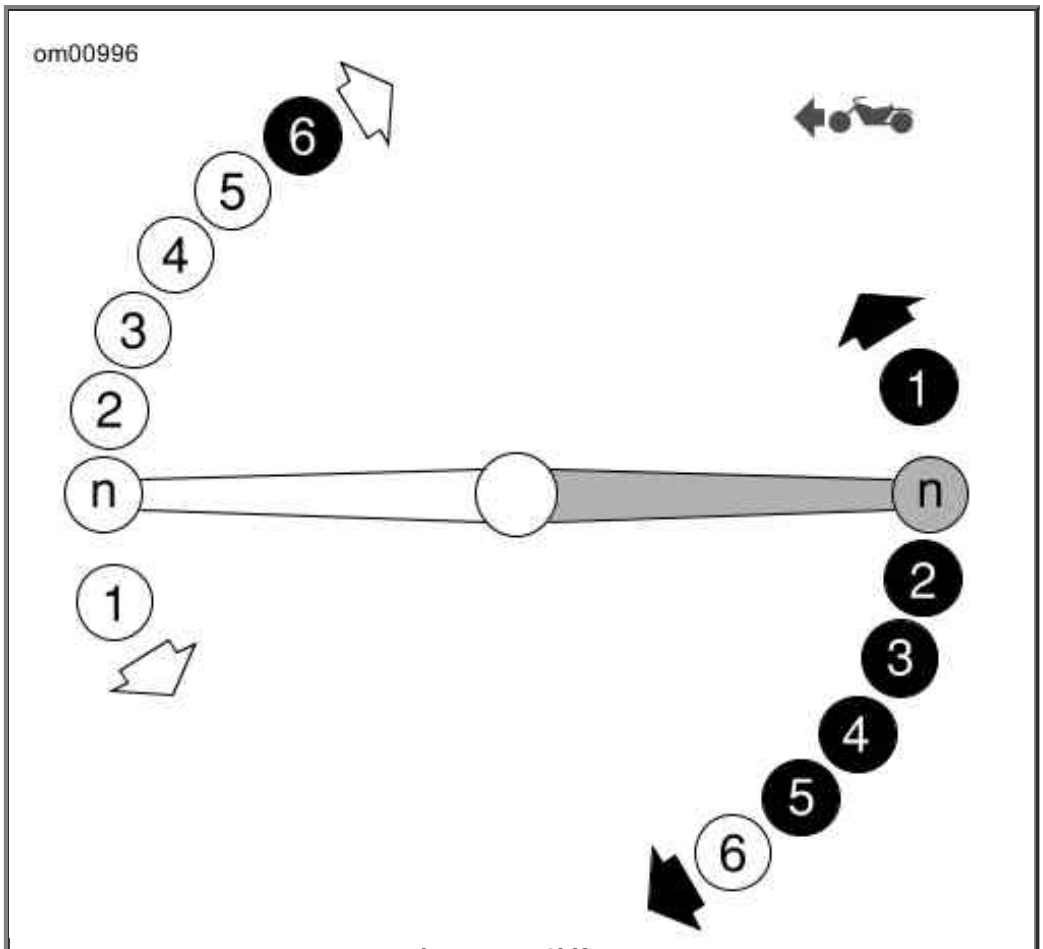

Heel-Toe Foot Shift Lever

Brake System

⚠WARNING

Do not apply brake strongly enough to lock the wheel. A locked wheel will skid and can cause loss of vehicle control, which could result in death or serious injury. (00053a)

The rear brake pedal controls the rear wheel brake and is located on the motorcycle's right side. Operate the rear brake pedal with the right foot.

The front brake hand lever controls the front wheel brake and is located on the right handlebar. Operate the hand lever with the fingers of the right hand.

⚠WARNING

Do not position fingers between hand control lever and handlebar grip. Improper hand positioning can impair control lever operation and cause loss of vehicle control, which could result in death or serious injury. (00032a)

Brakes should be applied uniformly and evenly to prevent wheels from locking up. A balance between rear and front braking is generally best.

Jiffy Stand

⚠WARNING

Always park motorcycle on a level, firm surface. An unbalanced motorcycle can fall over, which could result in death or serious injury. (00039a)

The jiffy stand is located on the left side of the motorcycle and swings outward to support the motorcycle for parking.

⚠WARNING

The jiffy stand locks when placed in the full forward (down) position with vehicle weight on it. If the jiffy stand is not in the full forward (down) position with vehicle weight on it, the vehicle can fall over which could result in death or serious injury. (00006a)

⚠WARNING

Be sure jiffy stand is fully retracted before riding. If jiffy stand is not fully retracted, it can contact the road surface causing a loss of vehicle control, which could result in death or serious injury. (00007a)

Jiffy Stand Interlock: International Models

Some international models are equipped with a jiffy stand interlock feature.

If the rider attempts to start the engine or pushes the starter button while the transmission is in gear and the jiffy stand is down, then the jiffy stand interlock system will not permit the engine to run. The message "SidE StAnd" will scroll across the odometer to indicate this to the rider. Raising the jiffy stand (or putting the transmission in neutral) will permit the engine to run and clear the message.

If the jiffy stand falls out of the fully retracted position while riding at speeds greater than 10 mph 15 km/h , then the jiffy stand interlock system will maintain engine operation and alert the rider about this by illuminating the indicators (flash twice) and scroll the message "SidE StAnd" across the odometer. The message will remain until the system detects the jiffy stand in the fully retracted position again. The rider may continue to operate the vehicle while in this mode.

The rider may clear the text messages at any time by pressing the function switch once while the vehicle is powered up.

NOTE:

If the operation of raising the jiffy stand and putting the transmission in gear is rapidly executed, the jiffy stand bouncing off the frame could cause the jiffy stand interlock system to activate and stop the engine.

Rear View Mirrors

⚠WARNING

Objects in mirrors are closer than they appear. Use caution when judging distance of objects in mirrors. Failure to judge correct distances could result in death or serious injury. (00033a)

Your vehicle is equipped with two convex rear view mirrors.

This type of mirror is designed to give a much wider view to the rear than a flat mirror. However, cars and other objects seen in this type of mirror will look smaller and farther away than they actually are.

- Use caution when judging the size or relative distance of objects seen in rear view mirrors.
- Always adjust the rear view mirrors to clearly reflect the area behind the motorcycle before riding.

NOTE:

Adjust mirrors so you can see a small portion of your shoulders in each mirror. This will help you establish the relative distance of vehicles to the rear of your motorcycle.

Fuel Filler Cap: Softail Models

⚠WARNING

Avoid spills. Slowly remove filler cap. Do not fill above bottom of filler neck insert, leaving air space for fuel expansion. Secure filler cap after refueling. Gasoline is extremely flammable and highly explosive, which could result in death or serious injury. (00028a)

See Fuel Tank: Softail Models. To open, turn fuel filler cap counterclockwise and lift up. To close, turn fuel filler cap clockwise until it clicks. The ratchet action of the cap prevents overtightening.

NOTES:

- *Fuel filler cap turns approximately a 3/4 turn before it starts unscrewing.*
- *Softail model fuel filler caps are located on the right side of the fuel tank. The cap on the left side is the fuel gauge and is NOT removable.*

See SAFE OPERATING RULES section and review safety procedures listed below.

CAUTION

Do not spill fuel onto the motorcycle while refueling. Immediately wipe up fuel spills on your motorcycle. Fuel can cause damage to cosmetic surfaces. (00147b)

CAUTION

Use only unleaded fuel in catalytic converter-equipped

motorcycles. Using leaded fuel will damage the emission control system. (00150b)

⚠WARNING

Do not store motorcycle with gasoline in tank within the home or garage where open flames, pilot lights, sparks or electric motors are present. Gasoline is extremely flammable and highly explosive, which could result in death or serious injury. (00003a)

⚠WARNING

Do not use aftermarket fuel caps. Aftermarket fuel caps may fit improperly and leak, which could lead to death or serious injury. See a Harley-Davidson dealer for approved fuel caps. (00034a)

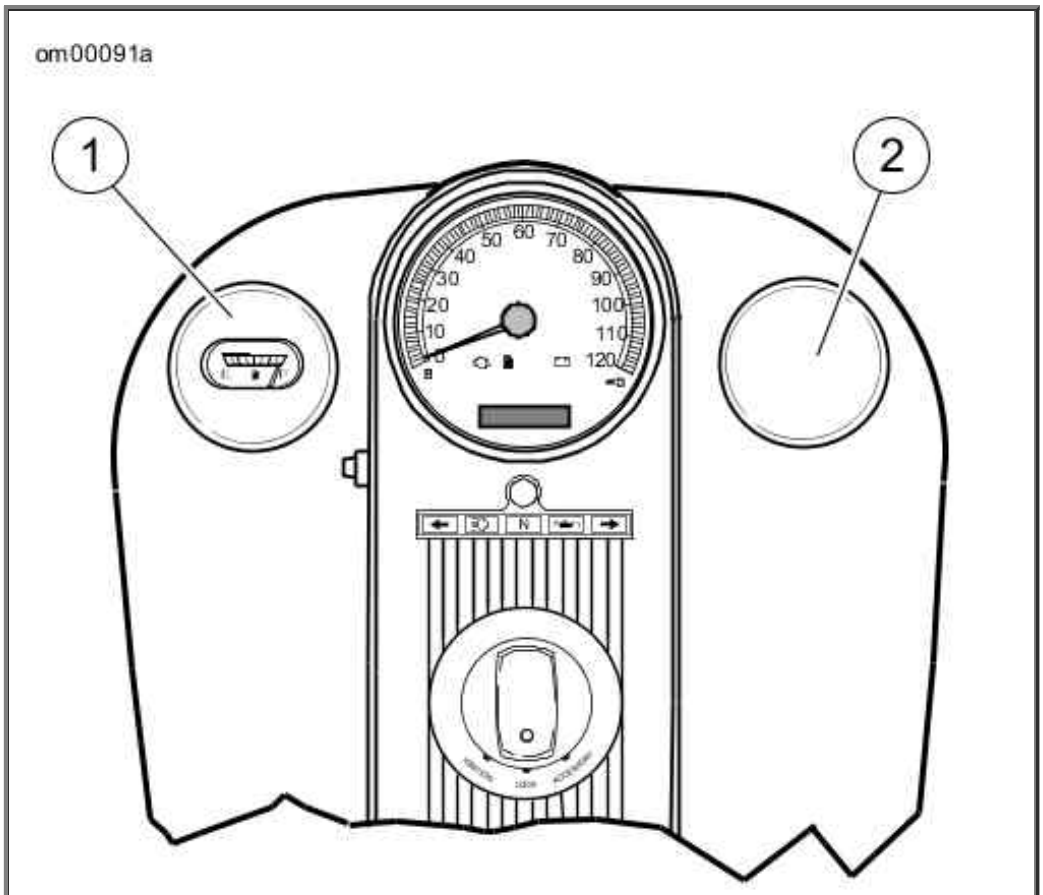

1. Fuel gauge
2. Fuel filler cap

Fuel Tank: Softail Models

Fork Lock: Softail Models

CAUTION

Protect your vehicle against theft. After parking your

motorcycle, lock the steering head and remove ignition key from switch. Failure to lock your motorcycle may result in theft and/or equipment damage. (00151a)

See Fork Lock. Softail models have the fork lock incorporated in the steering head on the right hand side.

⚠WARNING

Do not operate vehicle with forks locked. Locking the forks restricts the vehicle's turning ability, which could result in death or serious injury. (00035a)

Using the fork lock immediately after parking your motorcycle will discourage unauthorized use or theft when parking your motorcycle.

To Lock Fork

1. Turn fork to full left position.
2. Insert ignition key into fork lock.
3. Push in on fork lock and turn to left position.
4. Remove ignition key.

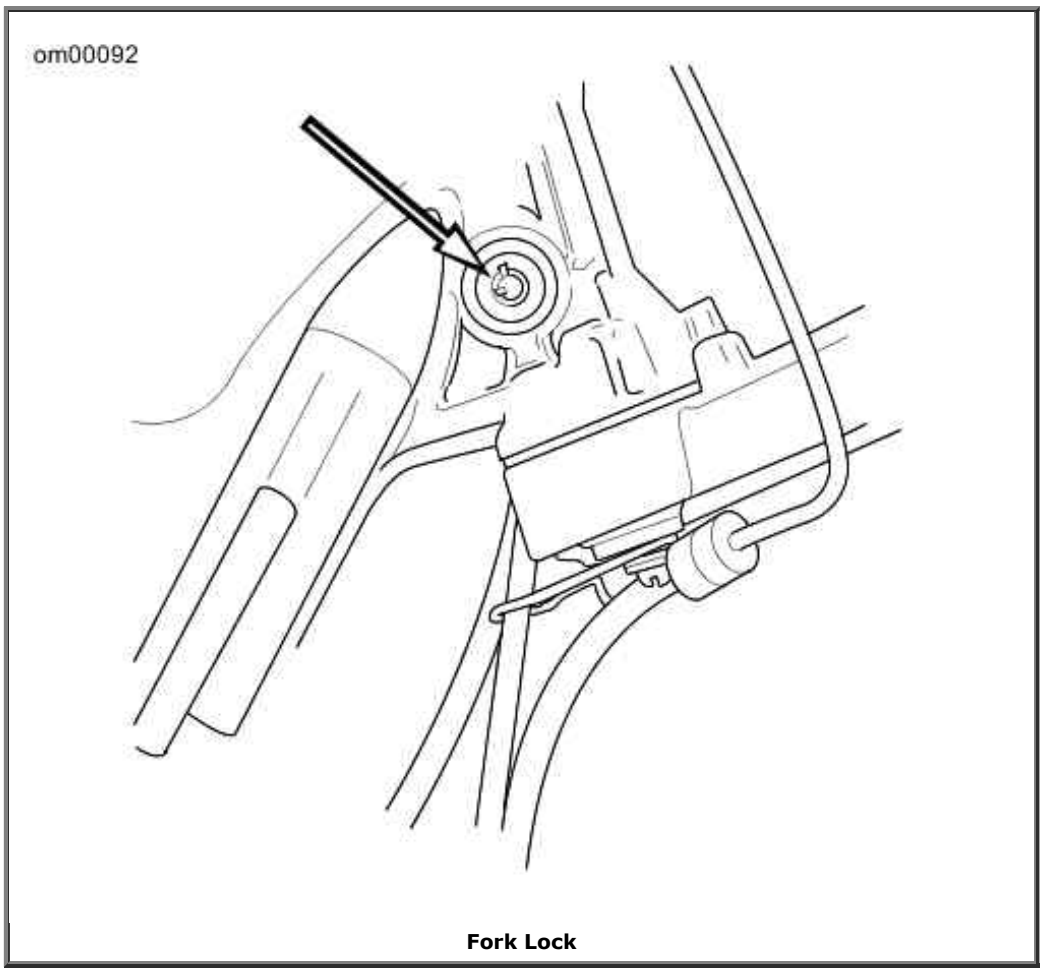

Fork Lock

Shock Absorbers: Softail Models

Softail models feature rear shock absorbers that can be adjusted. Rear shock spring preload may be varied to suit your own personal comfort.

NOTE:

Rear shocks are located under vehicle. Adjust shocks with the vehicle resting on the jiffy stand.

Adjustment

1. Loosen jam nut.

⚠WARNING

Be sure both shock absorbers are adjusted to same preload position. Improper adjustment can adversely affect stability and handling, which could result in death or serious injury. (00036a)

2. See Rear Shock Absorber Adjustment: Softail Models. Use a SPANNER WRENCH 94455-89 to turn the spring adjuster plate to the desired position.
   a. Turning the adjuster plates out (toward locknut) increases the spring preload to carry a heavier load.
   b. Turning the adjuster plates in (away from the locknut) decreases the spring preload to carry a lighter load.
3. Tighten jam nut.

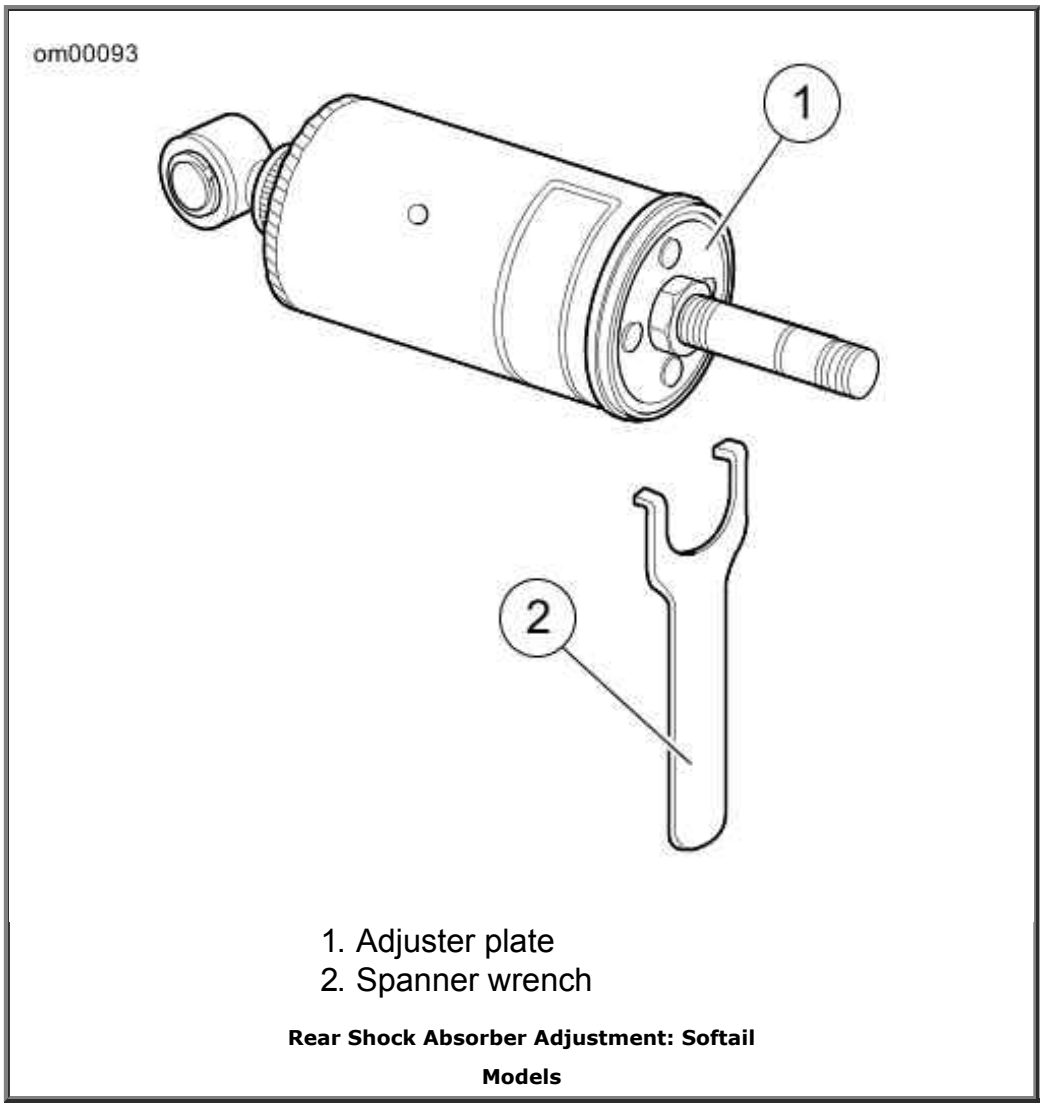

1. Adjuster plate
2. Spanner wrench

Rear Shock Absorber Adjustment: Softail Models

Saddlebags: FLSTC Models

⚠WARNING

See the Accessory and Cargo section in your Owner's Manual. Improper loading of cargo or installation of accessories can affect motorcycle stability and handling, which could result in death or serious injury. (00021a)

CAUTION

Check that saddlebag frame(s) are fully seated on mounting studs and knobbed screw(s) are securely tightened. Failure to do so could result in the saddlebags becoming detached and/or damaged. (00171a)

The saddlebags are fastened to the bike at several points, each by an integral frame. Two saddlebags with attached brackets are mounted on each side of the rear fender. Each saddlebag is mounted to the fender brace and the frame of the motorcycle. Each saddlebag bracket supports the saddlebags and is mounted to the fender brace and the motorcycle frame.

Removal

1. See Saddlebag Assembly: FLSTC Shown. Unbuckle the saddlebag straps.
2. Use one hand to support the saddlebag and another hand to unscrew the flange locknuts from the saddlebag bracket.
3. Remove flange locknuts, washers, acorn nuts, and the saddlebag from the fender brace.

Installation

1. See Saddlebag Assembly: FLSTC Shown. Place the saddlebag in position with the mounting holes on the fender brace.
2. Push the bag hanger studs, washers and flange locknuts through the saddlebag mounting holes, saddlebag frame and fender brace as shown.
3. Tighten fasteners to 120-144 in-lbs (13.6-16.3 Nm).
4. Buckle saddlebag straps.

⚠WARNING

Do not allow passenger to use saddlebags as grab handles. Failure to use a grab strap, designed for passengers to hold onto when riding, could result in death or serious injury. (00081a)

For proper saddlebag maintenance, see Leather Care.

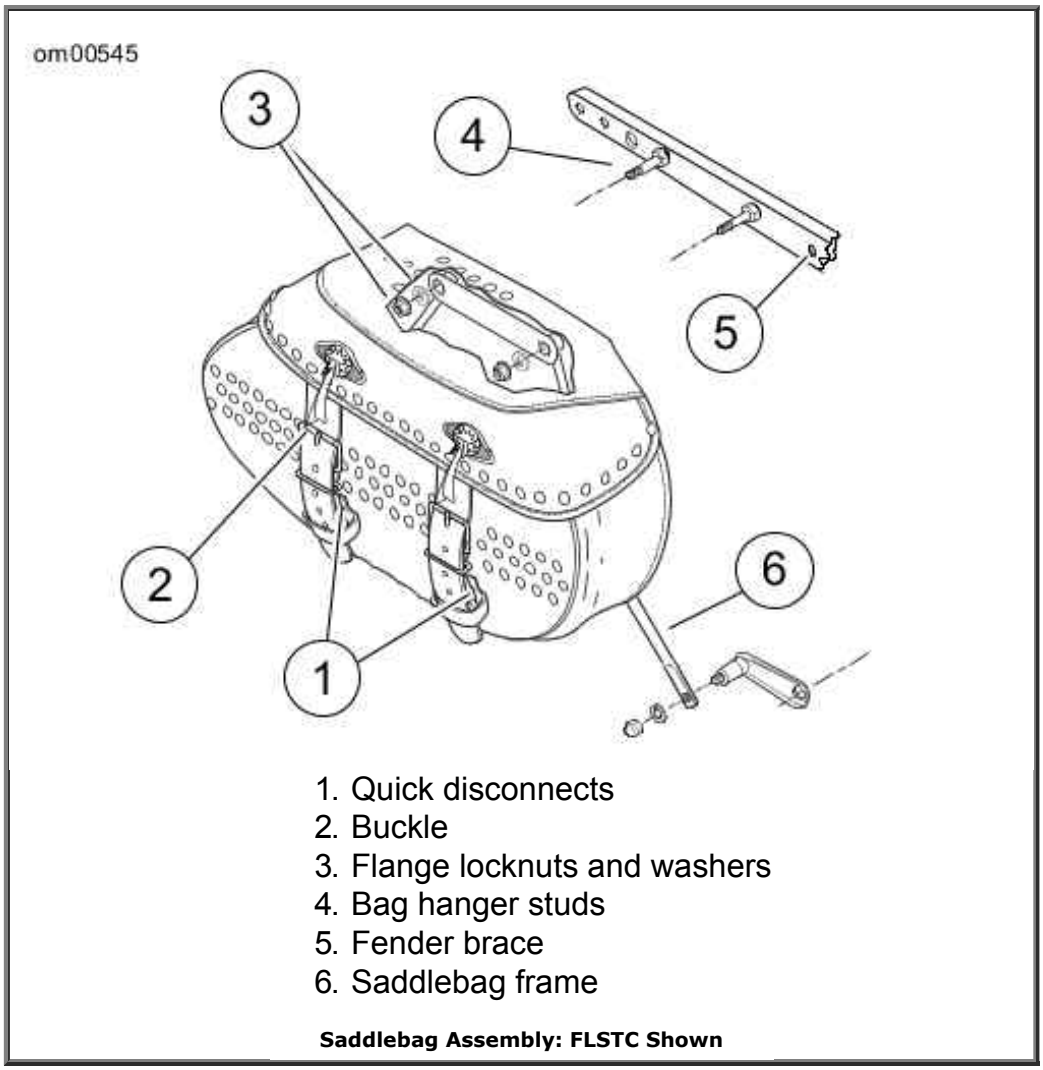

Saddlebag Assembly: FLSTC Shown

Saddlebag Operation

Opening

See Saddlebag Quick Disconnect. Some saddlebags have a quick disconnect feature. To use the quick disconnect strap feature:

1. Lift up the strap end to expose the quick release buckle.
2. Press on the lock tabs as shown.

NOTE:

The straps may also be opened and closed using the buckle in a conventional manner.

Closing

1. Insert the male strap end into the receptacle on the bag.
2. Push until a positive click is felt.

CAUTION

Check that saddlebag frame(s) are fully seated on

Check that saddlebag frame(s) are fully seated on mounting studs and knobbed screw(s) are securely tightened. Failure to do so could result in the saddlebags becoming detached and/or damaged. (00171a)

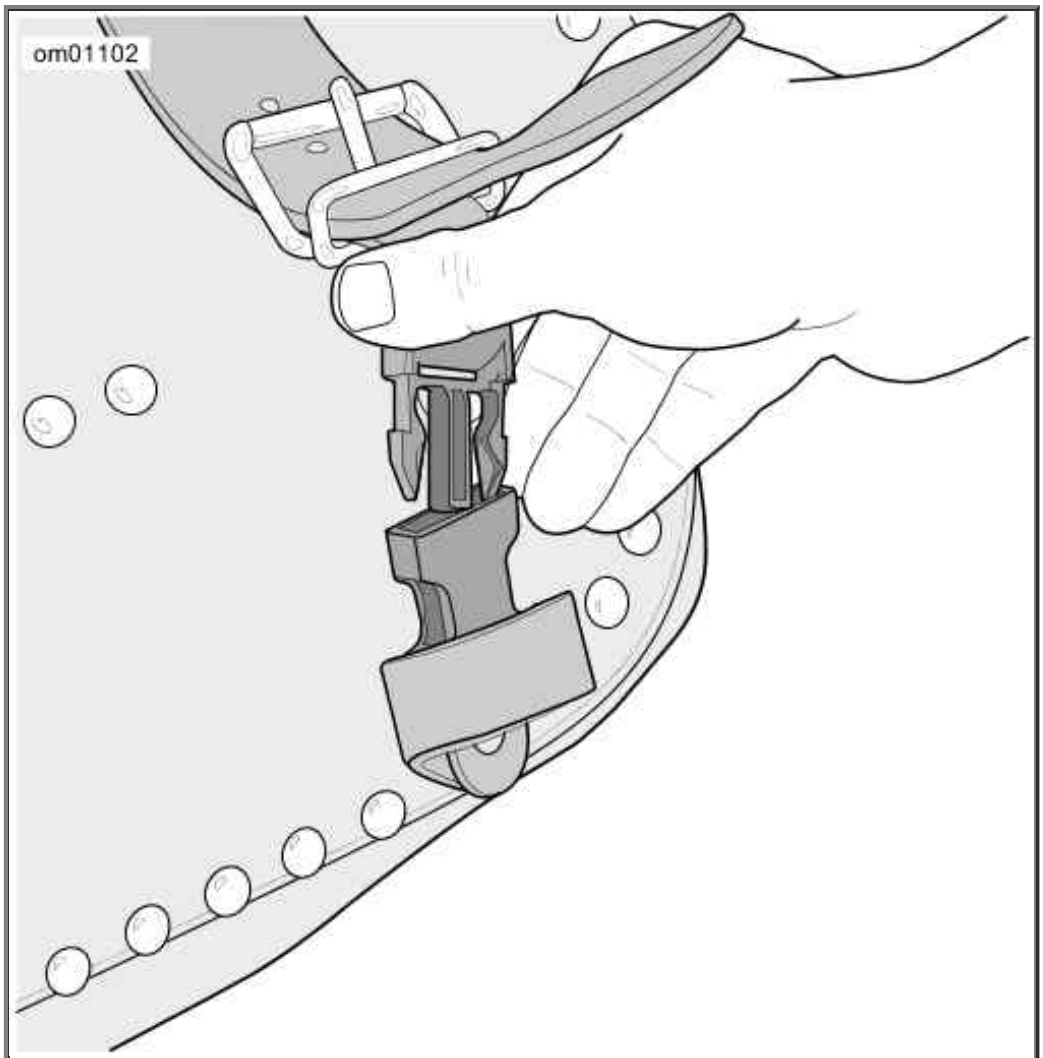

Saddlebag Quick Disconnect

Windshield: FLSTC Models

Removal

1. See Windshield Assembly. Insert your fingers into the wireform latch springs at either side of the windshield and move the TOP of the windshield assembly forward, until the TOP bracket notches slide away from the grommets.
2. Carefully lift the windshield bracket BOTTOM notches off the bottom grommets. Remove windshield.

Installation

1. See Windshield Assembly. Insert your fingers into the wireform latch springs at either side of the windshield and slide the BOTTOM windshield bracket notches onto the bottom grommets.

2. Slide the TOP bracket notches onto the top grommets.

NOTE:

For proper windshield maintenance, see Windshields.

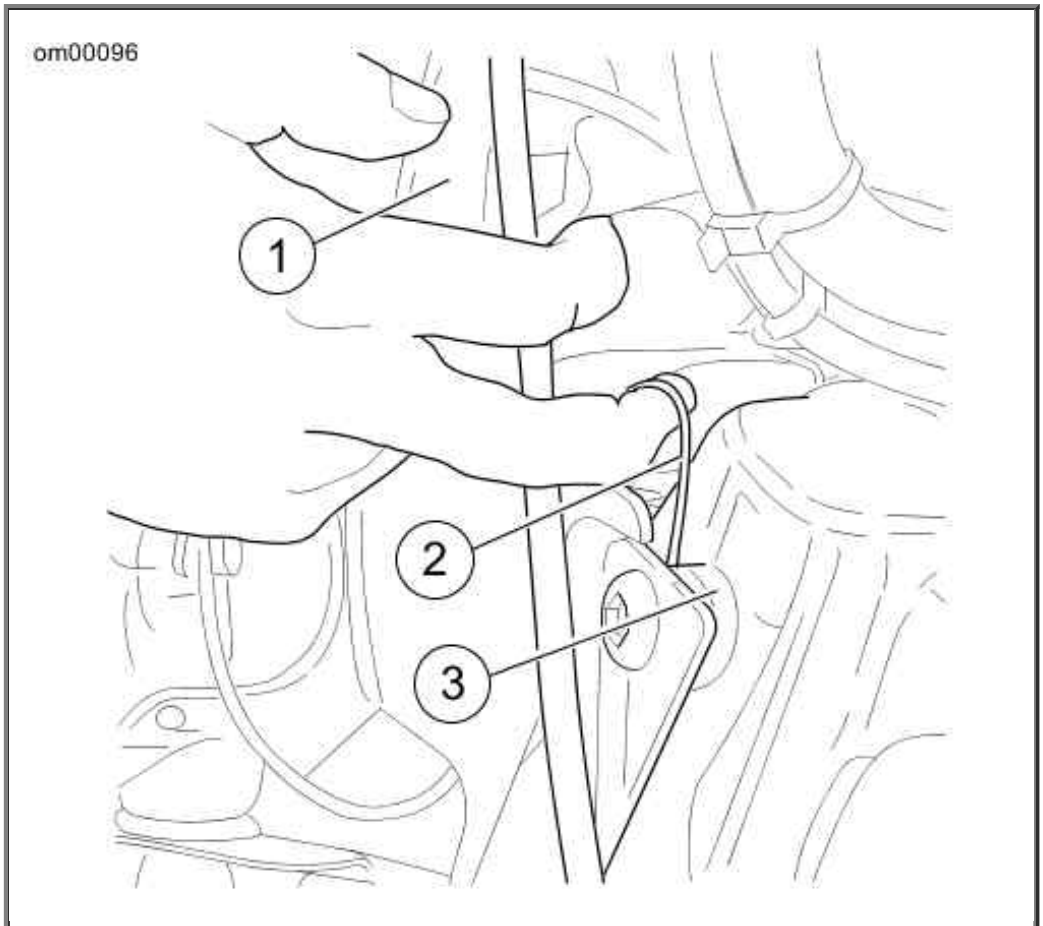

1. Windshield
2. Wireform latch spring
3. Grommet

Windshield Assembly

Auxiliary Lamps: FLSTC/FLSTN Models

See Auxiliary Lamp Switch. Use the auxiliary lamp switch to turn on the auxiliary lamps as required.

NOTES:

- *On the FLSTC, the auxiliary lamp switch is on the left, inside of the triple clamp shroud.*
- *The auxiliary lamps do not work when the headlamp is on high beam.*
- *Refer to service manual for alignment procedure.*

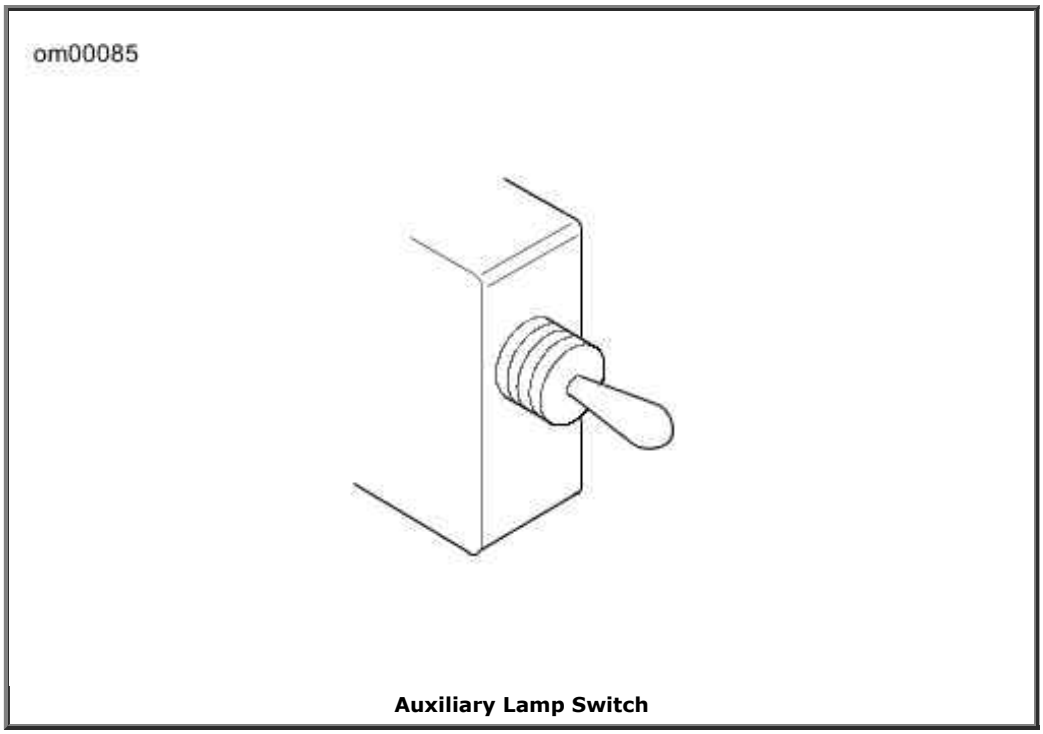

Auxiliary Lamp Switch

Hands-Free Security Module

Harley-Davidson Smart Security System

Components

See Security Module w/Antenna (shown removed). The Harley-Davidson Smart Security System (H-DSSS) consists of a Hands-Free Security Module (HFSM) (1) and a Hands-Free Antenna (2) mounted on the motorcycle, and a Hands-Free Fob **carried** by the rider/passenger.

After parking the motorcycle, turn the ignition key to OFF and the Smart Security System will automatically **arm** within five seconds. While armed, the starter and ignition are disabled and the rider may leave the motorcycle knowing that the module will activate an alarm if someone tampers with the ignition or attempts to move the motorcycle.

If the fob is present, the module will automatically **disarm** when the ignition key is turned to IGNITION or ACCESS.

NOTE:

Do not relocate the module or the antenna on the motorcycle.

Options

Several options are available for the Harley-Davidson Smart Security System from the Harley-Davidson Genuine Motor Accessories and Motor Parts catalog. Options include:

- Smart Siren and Smart Siren II.
- Security Pager and Security Pager Receiver II.
- Replacement Fobs.

See a Harley-Davidson dealer for details.

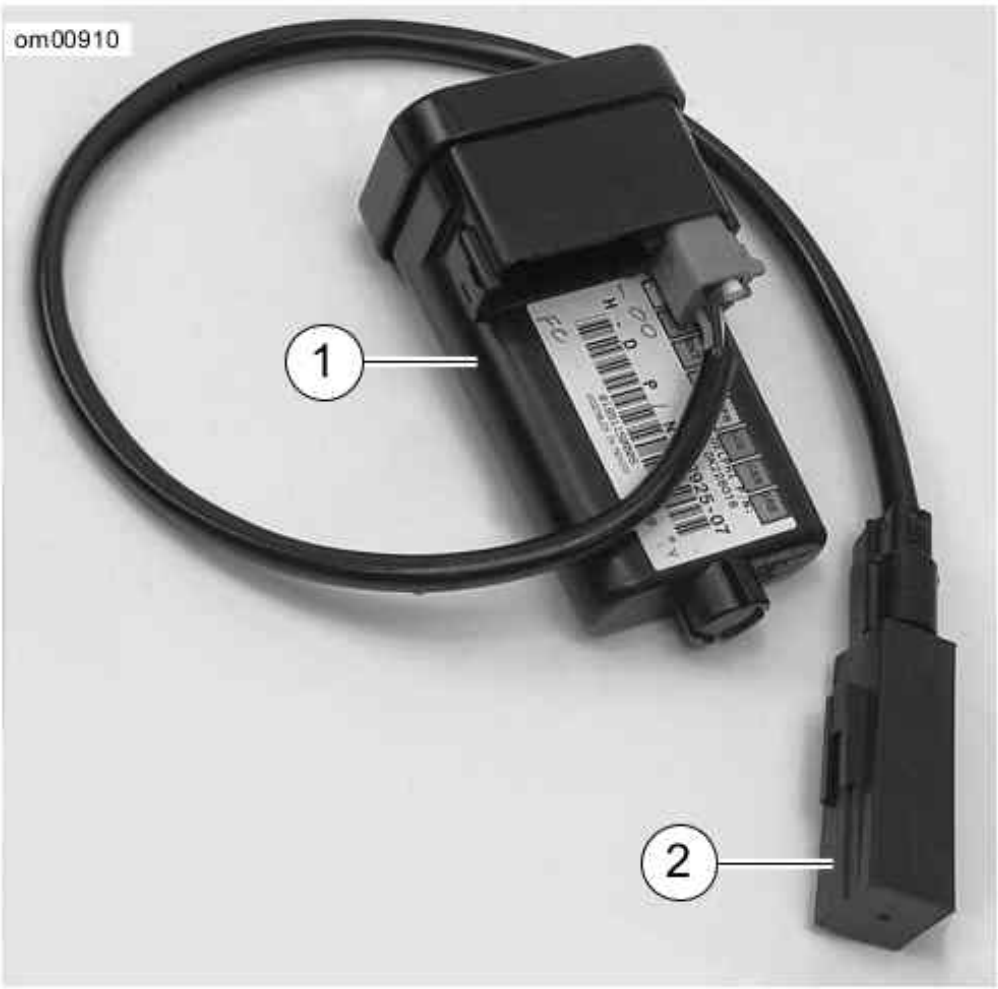

1. Hands-Free Security Module
2. Hands-Free Antenna

Security Module w/Antenna (shown removed)

FCC Regulations

FCC ID: L2C0027TR IC ID: 3432A-0027TR

FCC ID: L2C0028TR IC ID: 3432A-0028TR

This device complies with Part 15 of the FCC Rules and with RSS-210 of Industry Canada rules. Operation is subject to the following two conditions:

(1) This device may not cause harmful interference, and (2) This device must accept any interference received, including interference that may cause undesired operation.

WARNING: Changes or modifications not expressively approved by the party responsible for compliance could void the user's authority to operate the equipment.

The term "IC:" before the radio certification number only signifies that Industry Canada technical specifications were met.

Hands-Free Fob: Softail Models

Fob Assignment

See Hands-Free Fob: Smart Security System. Hands-Free Fobs are electronically assigned to the Harley-Davidson Smart Security System by a Harley-Davidson dealer so that the module can recognize a fob's unique signal. Only two fobs can be assigned to the module at any one time.

Replacement fobs can be purchased from a dealership but can only be assigned to the motorcycle by a trained Harley-Davidson technician.

NOTES:

- *The reusable label found on the fob packaging lists the serial number of the fob. For reference, fix the label to a blank "NOTES" page in the Owner's Manual.*
- *The serial number of the fob is also found on the inside of the fob. See Fob Battery.*
- *The module will arm only if the fob has been assigned by a Harley-Davidson dealer and a Personal Identification Number (PIN) has been entered in the system. The PIN should be recorded on the Personal Information page in the front of this Owner's Manual and on the removable wallet card.*
- *Should the rider misplace the fob or if the fob fails, the rider can refer to the wallet card and use the PIN to manually disarm the system. Refer to Arming and Disarming and Troubleshooting.*
- *The PIN can easily be changed by the rider at any time. Refer to Personal Identification Number (PIN).*

Hands-Free Fob: Smart Security System

Riding with a Fob

- Always carry the fob when riding, loading, fueling, moving, parking or servicing the motorcycle. Carry the fob in a convenient pocket.
- Do not leave the fob attached to the handlebars or store the fob in a saddlebag or Tour-Pak®. Unintentionally leaving the fob with the motorcycle when it's parked prevents the system from activating the alarm.
- Do not ride with the fob stored in a metal case or with the fob closer than 3.0 in. 76 mm to a cell phone, PDA, display or other electronic device. Any electromagnetic interference may prevent the fob from disarming the system.
- For added security, always lock the fork and remove the ignition key when parked. If the fob is within range and the motorcycle is unlocked, tampering with the motorcycle will not activate the alarm.

NOTE:

Fob should not be left on key while operating FXCW or FXCWC models. Damage to coil surface and fob may result.

Personal Identification Number (PIN)

The Personal Identification Number (PIN) is a number that can be used to disarm the Harley-Davidson Smart Security System in case an assigned fob is misplaced, fails or if the fob and module cannot communicate because of electromagnetic interference.

A PIN is a five-digit number (1-9, no zeros).

Changing the PIN

To maintain security, the rider can change the PIN at any time. Refer to Changing the PIN.

Changing the PIN

STEP NO.	ACTION	WAIT FOR CONFIRMATION	NOTES
1	Select a 5-digit (1 thru 9) PIN and record on the wallet card from Owner's Manual.		
2	With an assigned fob present, turn **IGN** key **IGNITION**-OFF-**IGNITION**-OFF-**IGNITION.**		
3	Press **left** turn signal switch **3 times**.		
4	Press **right** turn signal switch **1 time** and release.	Turn signals will flash 3 times. Current PIN will appear in odometer. The first digit will be flashing.	See figure showing the odometer window with PIN display.
5	Enter first digit (a) of new PIN by pressing **left** turn signal switch **a** times.		
6	Press **right** turn signal switch **1 time** and release.	The new digit (a) will replace the current in odometer window.	
7	Enter second digit (b) of new		

7	Enter second digit (b) of new PIN by pressing **left** turn signal switch **b** times.		
8	Press **right** turn signal switch **1 time** and release.	The new digit (b) will replace the current in odometer window.	
9	Enter third digit (c) of new PIN by pressing **left** turn signal switch **c** times.		
10	Press **right** turn switch **1 time** and release.	The new digit (c) will replace the current in odometer window.	
11	Enter fourth digit (d) of new PIN by pressing **left** turn signal switch **d** times.		
12	Press **right** turn switch **1 time** and release.	The new digit (d) will replace the current in odometer window.	
13	Enter fifth digit (e) of new PIN by pressing **left** turn signal switch **e** times.		
14	Press **right** turn switch **1 time** and release.	The new digit (e) will replace the current in odometer window.	
15	Before the module rearms, turn the ignition key to **OFF**.	The odometer will return to mileage.	Turning the ignition key to **OFF** stores the new PIN in the module.

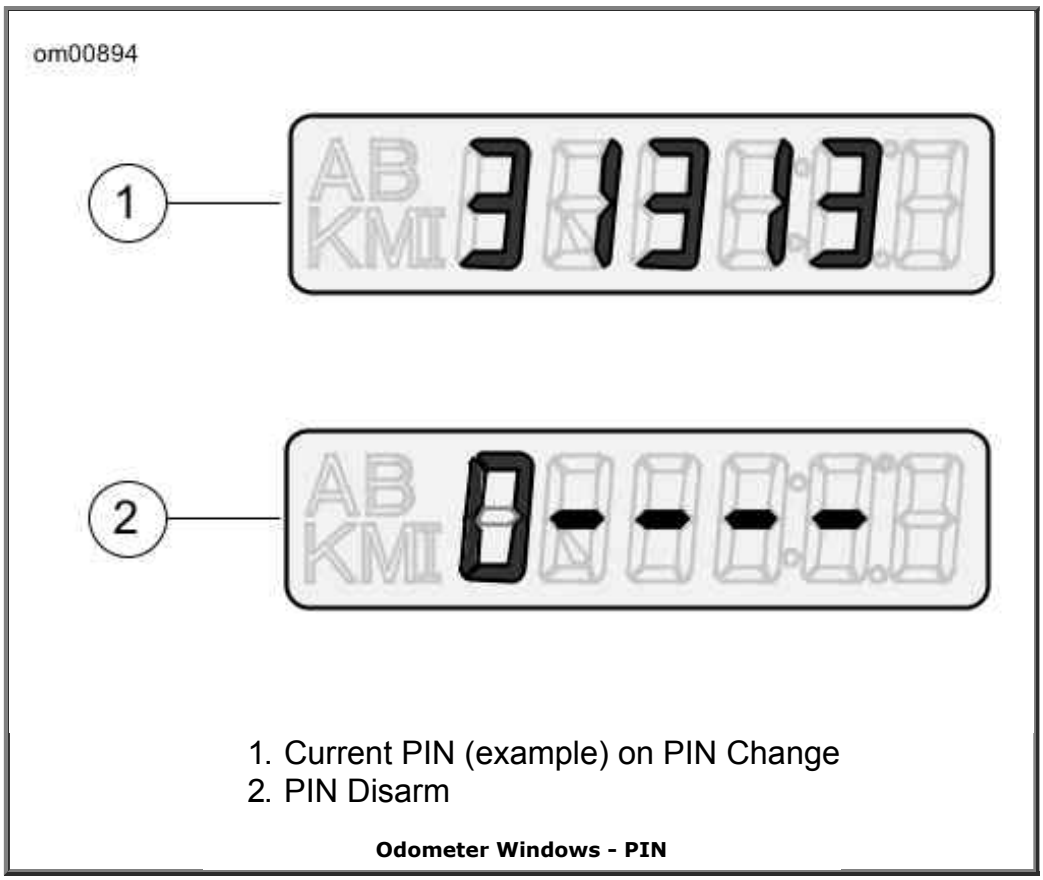

1. Current PIN (example) on PIN Change
2. PIN Disarm

Odometer Windows - PIN

Security Status Indicator

See Security Status Indicator. The illuminated key icon in the speedometer face indicates the status of the Harley-Davidson Smart Security System.

- **Armed:** A key icon that blinks approximately every 3 seconds indicates that the system is armed.
- **Disarmed:** After the ignition/headlamp switch is turned to IGNITION and the system disarms, the key icon will remain illuminated for approximately four seconds and then turn off.
- **Service:** A key icon that remains illuminated longer than four seconds indicates that service of the module is required.

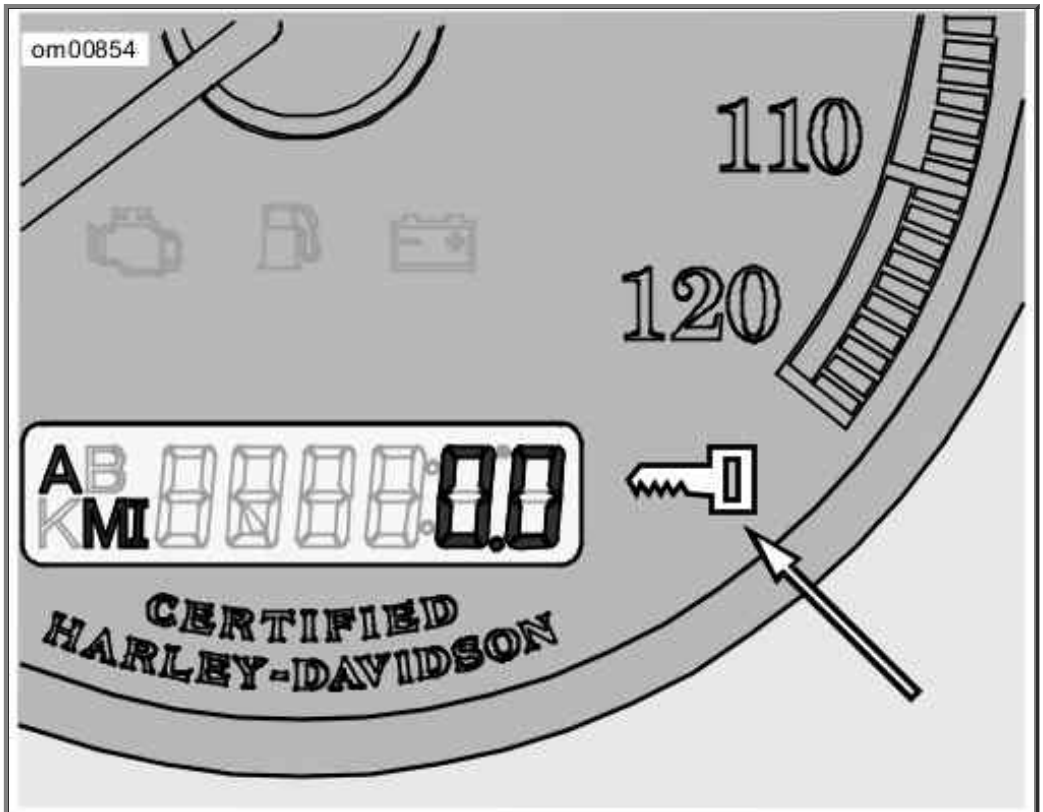

Security Status Indicator

Arming and Disarming

Arming

When the motorcycle is parked and the ignition key is turned to OFF, the Harley-Davidson Smart Security System arms automatically within five seconds if no motion is detected. Even when the fob is present, the system will arm.

On arming, the turn signals will flash twice and the optional siren will chirp twice. While armed, the key icon in the speedometer face will flash every three seconds.

NOTE:

International Models: *The HFSM must be in the Chirp Mode for the siren to chirp on arming or on disarming. See Siren Chirp Mode (Confirmation).*

Disarming

Once disarmed, the rider may ride or move the motorcycle for parking, storage or service without setting off the alarm.

Fob: An armed Smart Security System is automatically disarmed when the ignition key is turned to IGNITION with the fob present.

When the module disarms, the optional siren will chirp once and the key icon will illuminate for a solid four seconds and then turn off.

NOTE:

Any motion, like lifting the motorcycle up off of its jiffy stand, or turning the ignition key to IGNITION and the module will electronically "poll" for the presence of the fob. If the fob is present, the system disarms.

Personal Identification Number (PIN): If the fob is misplaced or if the present fob fails to communicate with the module, the system can be disarmed with the Personal Identification Number (PIN).

Disarming with a PIN

Do not turn handlebars, straddle seat or lift motorcycle off the jiffy stand. During a PIN disarm, if the Smart Security System detects motorcycle motion the system will activate the alarm.

Entering a PIN to Disarm Harley-Davidson Smart Security System

STEP NO.	ACTION	WAIT FOR CONFIRMATION	NOTES
1	If necessary, verify the current 5-digit PIN.		Should be recorded on wallet card.
2	Turn ignition key to **IGNITION**.		
3	Quickly (within 2 seconds of turning ignition key) hold **both** turn signal switches in until confirmation.	Key icon flashes at fast rate. In the odometer window, a flashing dash will be followed by four more dashes.	See figure showing the odometer window with PIN display. Five dashes will appear in the odometer window.
4	Enter first digit (**a**) in the PIN by pressing **left** turn switch **a times.**	The first digit (**a**) in the odometer will be the first digit in the PIN.	
5	Press **right** turn switch **1 time.**	The first digit is stored and the dash will flash.	Serves as enter key.
6	Enter second digit (**b**) in the PIN by pressing **left** turn switch **b times.**	The second digit (**b**) in the odometer will be the second digit in the PIN.	
7	Press **right** turn switch **1 time.**	The second digit is stored and the next dash will flash.	Serves as enter key.
8	Enter third digit (**c**) in the PIN by pressing **left** turn switch **c times.**	The third digit (**c**) in the odometer will be the third digit in the PIN.	

9	Press **right** turn switch **1 time**.	The third digit is stored and the next dash will flash.	Serves as enter key.
10	Enter fourth digit (**d**) in the PIN by pressing **left** turn switch **d times**.	The fourth digit (**d**) in the odometer will be the fourth digit in the PIN.	
11	Press **right** turn switch **1 time.**	The fourth digit is stored and the next dash will flash.	Serves as enter key.
12	Enter fifth digit (**e**) in the PIN by pressing **left** turn switch **e times.**	The fifth digit (**e**) in the odometer will be the fifth digit in the PIN.	
13	Press **right** turn switch **1 time**.	The fifth digit is stored. The key icon stops blinking.	Smart Security System is disarmed.

NOTES:

- *At any time during a PIN disarm, if the fob is brought within range of the motorcycle, the Smart Security System will disarm when the module receives the coded signal from the fob.*
- *If a mistake is made while entering PIN, wait two minutes before another disarming attempt.*
- *The Smart Security System will remain disarmed until the ignition key is turned to OFF.*

Arming with Hazard Warning 4-Way Flashers On

If it should be necessary to leave a motorcycle parked along side a roadway, the hazard warning four-way flashers can be turned ON and the Smart Security System armed.

1. Turn ignition key to IGNITION.
2. Simultaneously press both left and right turn signal switches to turn the four-way flashers ON.
3. Turn the ignition key to OFF to arm the Smart Security System.

To turn hazard warning flashers OFF, turn the ignition key to IGNITION and simultaneously press the left and right turn signal switches.

Alarm

Warnings

Once armed, if the motorcycle is moved or lifted up off of its jiffy stand or if the ignition key is turned to IGNITION and the fob is not present, the alarm will warn the operator with three alternate flashes of the turn signals and a chirp of the optional siren.

Within four seconds, if the motorcycle is back on its jiffy stand and no further motion is detected and/or the ignition key is turned to OFF, the module will remain armed without activating the alarm.

If the motorcycle motion continues or the ignition key is not turned back to OFF, the module will issue a second warning four seconds after the first.

NOTE:

During warnings and alarms, the starter motor and the ignition circuits are disabled.

The Alarm

If the Smart Security System is still detecting motion and/or if the ignition key has not been turned back to OFF after a second warning, the system will activate the alarm.

When activated, the Smart Security System will:

- Alternately flash the four turn signals.
- See Optional Smart Siren. Sound the optional siren.

Duration: The alarm will stop within 30 seconds and if no motion is detected, the alarm will not restart.

However, if motorcycle motion continues the system will repeat the 30 second alarm and recheck for motion. The alarm will repeat this 30 second alarm cycle for five minutes (10 cycles) or until the alarm is deactivated.

NOTE:

The alarm will also activate the LED, vibration or audible modes of a Harley-Davidson Security Pager. A pager can operate either in silent or in combination with an optional Smart Siren. The range of a pager can be up to 0.5 mile 0.8 km . See a Harley-Davidson dealer for details.

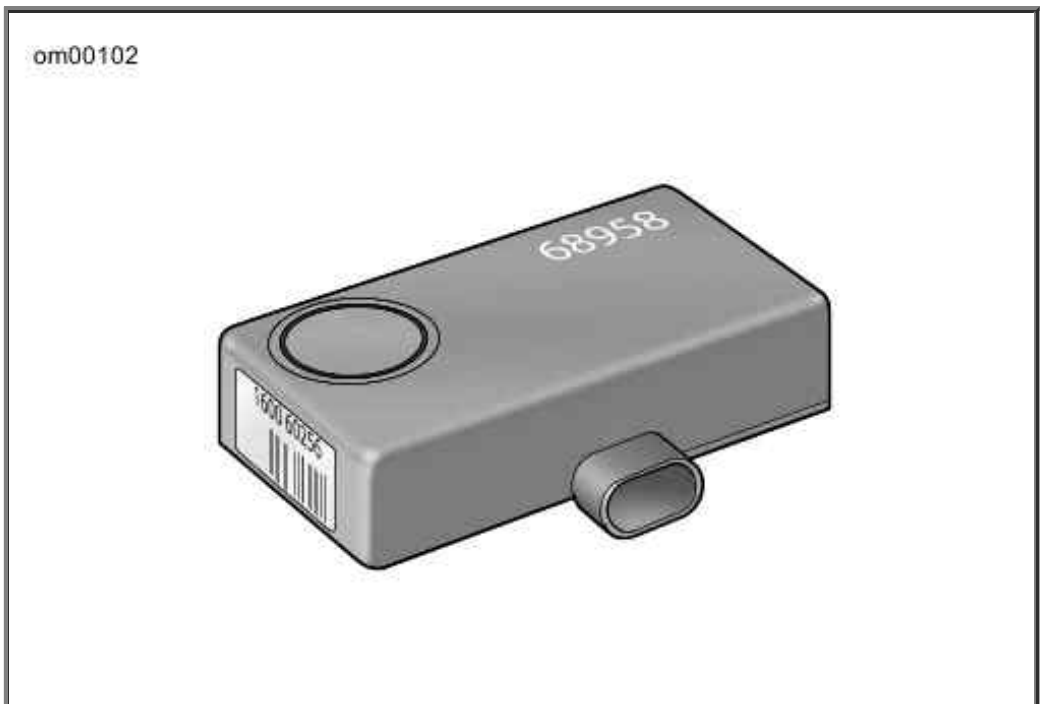

Optional Smart Siren

Deactivate the Alarm

Key Fob: Bring the fob to the motorcycle. After the module identifies that the fob is present, the system will terminate the alarm.

Siren Chirp Mode (Confirmation)

Chirpless Mode

In the chirpless mode, the siren does not chirp on arming or disarming.

NOTE:

Even when armed in the chirpless mode, the siren still chirps warnings on movement and will activate the alarm through cycles.

Chirp Mode

On arming in the chirp mode, the siren responds with two chirps. When disarming, the siren responds with a single chirp.

Switching Modes

Cycling quickly through two armings and disarmings will switch the system from either the chirpless mode or the chirp mode to its opposite.

1. With the fob present, the ignition switch to ON and the system disarmed, turn the ignition switch OFF.
2. When the system arms (2 flashes of turn signals), immediately turn the ignition switch to ON.
3. Wait until the security lamp goes out, then immediately turn the ignition switch OFF.
4. When the system arms (2 flashes of turn signals), immediately turn the ignition switch to ON and wait for system to disarm.

Transport Mode

It is possible to arm the security system without enabling the motion detector for one ignition cycle. This allows the vehicle to be picked up and moved in an armed state, however, any attempt to start the engine will trigger the alarm.

To Enter Transport Mode

1. Turn the Ignition Switch to IGNITION.
2. Set the Engine Stop Switch to OFF.
3. With an assigned fob within range, turn the Ignition Switch from IGNITION to ACC.
4. Simultaneously press both the left and the right turn signal switches. This must be done within five seconds of turning the Ignition Switch to ACC.
5. After the turn signals flash once, turn the Ignition Switch to OFF and the module is armed.
6. Confirmation: Turn signal blinks three times when armed for one ignition cycle.

To Exit Transport Mode

Return the system to normal operation:

With the fob present, turn the Ignition Switch to IGNITION to disarm the HFSM. To cancel the transport mode, set the Engine Stop Switch to RUN.

Storage and Service Departments

Long Term Parking

To maintain arming, store the fob beyond the range of the module. If the motorcycle is to be moved while parked, have the fob present.

If the motorcycle will not be operated for several months, such as during the winter season, follow the Owner's Manual instructions for storage. Refer to Motorcycle Storage.

Service Departments

When the motorcycle is to be left at a Harley-Davidson dealer, there are two options:

1. Leave an assigned fob with the dealer.
2. To maintain possession of the fob, ask the dealer to disable the module for service (service mode) before leaving the dealership.

Fob Battery

Replacing the Battery

Replace the key fob battery every year.

1. See Hands-Free Fob Battery. Slowly turn a thin blade in the thumbnail slot (1) on the side of the fob to separate the two halves.
2. Remove the battery (2) and discard.

   NOTE:

   Dispose of the old battery in accordance with local regulations.
3. Install a **new** battery (Panasonic 2032 or equivalent) with the positive (+) side down.
4. Align the two halves of the fob and snap together.

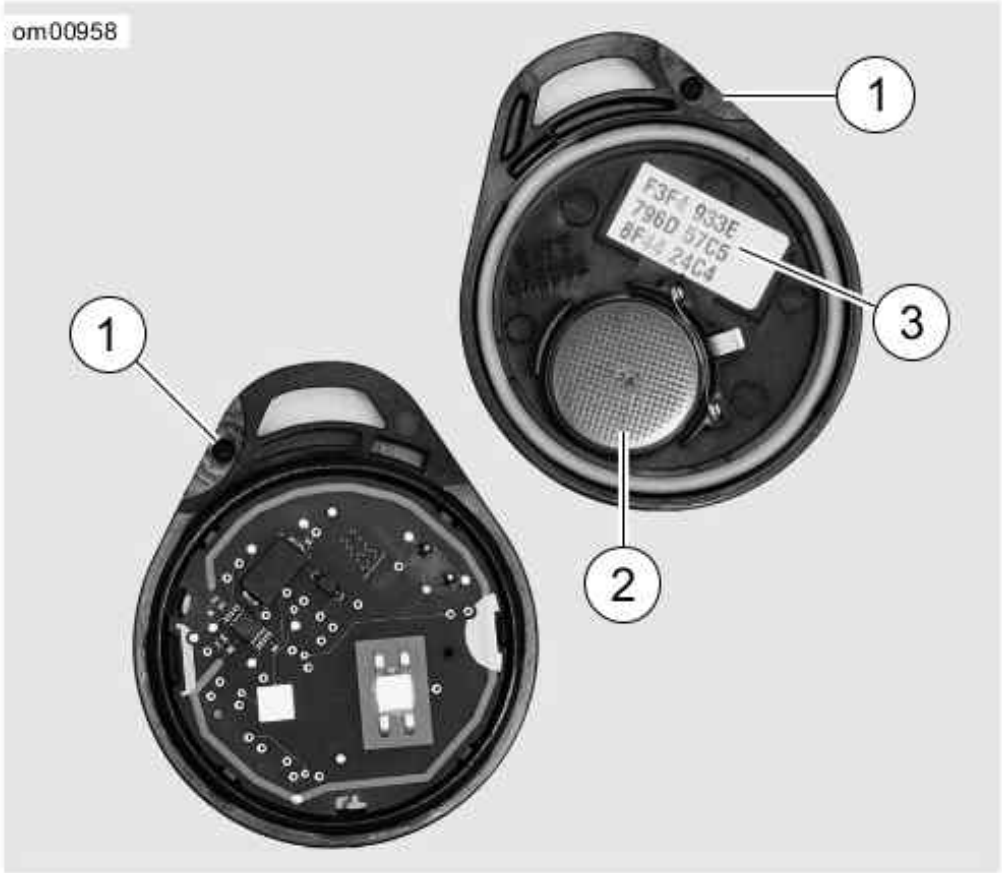

1. Thumbnail slot
2. Battery
3. Fob serial number

Hands-Free Fob Battery

Power Disconnects

Optional Siren

On a power disconnect, to prevent the module from actuating the optional siren:

1. Verify that the fob is present.
2. Turn the ignition key to IGNITION.
3. Pull the main fuse from its holder or disconnect the battery.

Troubleshooting

Key Icon

If the system key icon stays illuminated while riding, see a Harley-Davidson dealer.

Fob

With the fob present, if the Smart Security System continues to actuate warnings and alarms, one

of the following can be the cause:

1. **Electromagnetic Interference:** Other electronic devices, power lines, or other electromagnetic sources can cause the Smart Security System to operate inconsistently.

    a. Verify that the fob is not in a metal enclosure or within 3.0 in. 76 mm of any other electronic devices.

    b. Place the fob on the seat and turn the ignition key to IGNITION. After the module disarms, return the fob to a convenient location.

    c. Move motorcycle at least 15 feet 5 m from the spot of interference.

2. **Discharged Fob Battery:** Use the PIN to disarm the module. Replace the battery. Refer to Fob Battery.

3. **A Damaged Fob:** Use the PIN to disarm the motorcycle. Replacement fobs are available for purchase from a Harley-Davidson dealer.

Siren

- If the siren does not chirp two or three times on a valid arming command from the security module, the siren is either in the Chirpless Mode, not connected, not working, or the siren wiring was opened or shorted while the siren was disarmed.
- If the siren is armed and the internal siren battery is dead, shorted, disconnected, or has been charging for a period longer than 24 hours, the siren will respond with three chirps on arming instead of two.
- The internal siren battery may not charge if the vehicle's battery is less than 12.5 volts.
- If the siren enters the self-driven mode where it is powered from the siren's internal 9 volt battery, the turn signal lamps may or may not alternately flash. If the security module activates the siren, the turn signal lamps will alternately flash. If the siren has been armed and a security event occurs, and the siren is in self-driven mode, the siren will alarm for 20 to 30 seconds and then turn off for 5 to 10 seconds. This alarm cycle will be repeated ten times if the siren is in the self-driven mode.

Operation

Operating Recommendations: Softail Models

⚠WARNING

Motorcycles are different from other vehicles. They operate, steer, handle and brake differently. Unskilled or improper use could result in loss of control, death or serious injury. (00556c)

- Take a rider training course.
- Read Owner's Manual before riding, adding, accessories or servicing.
- Wear a helmet, eye protection and protective clothing.
- Never tow a trailer.

CAUTION

Do not run the engine at extremely high RPM with clutch disengaged or transmission in neutral. Running an engine at high RPM can result in engine damage. (00177a)

- The maximum recommended safe engine speed is 5500 RPM.
- Do not idle engine unnecessarily for more than a few minutes with motorcycle standing still.

CAUTION

Do not exceed the maximum safe RPM specified below under any conditions. Exceeding the maximum safe engine RPM can result in equipment damage. (00248a)

NOTE:

The maximum recommended engine speed for Softail model motorcycles is 5500 RPM.

CAUTION

Air-cooled engines require air movement over the cylinders and heads to maintain proper operating temperature. Extended periods of idling or parade duty can overheat the engine, resulting in serious engine damage. (00178a)

An engine running long distances at high speed must be given closer than ordinary attention to avoid overheating and possible engine damage.

This applies particularly to a motorcycle equipped with windshield and fairing.

NOTE:

Have the engine checked regularly and keep it well tuned.

⚠WARNING

When riding on wet roads, brake efficiency and traction are greatly reduced. Failure to use care when braking, accelerating or turning on wet roads can cause loss of control, which could result in death or serious injury. (00041a)

NOTE:

When descending upon a long, steep grade, downshift and use engine compression together with intermittent application of both brakes to slow the motorcycle.

⚠WARNING

Continuous use of brake causes overheating and reduced efficiency, which could result in death or serious injury.

(00042a)

CAUTION

Do not coast for long distances with the engine off or idling. The transmission is properly lubricated only when the engine is running. Coasting long distances can result in transmission damage. (00180b)

⚠WARNING

Do not tow a disabled motorcycle. Towing can adversely affect stability and handling, which could result in death or serious injury. (00017a)

CAUTION

The Rocker models (FXCW and FXCWC) have a swing-arm mounted fender. The fender will not support a passenger and should not be fitted with a luggage rack. Damage to the fender could occur. (00557b)

Break-in Riding Rules

The First 500 Miles (800 Kilometers)

The sound design, quality materials, and workmanship that are built into your new Harley-Davidson will give you optimum performance right from the start.

To allow your engine to wear in its critical parts, we recommend that you observe the riding rules provided below for the first 500 miles 800 kilometers . Adherence to these suggestions will help to assure good future durability and performance.

1. During the first 50 miles 80 kilometers of riding, keep the engine speed below 4000 RPM in any gear. Do not lug the engine by running or accelerating at very low RPM, or by running at high RPM longer than needed for shifting or passing.

   NOTE:

   For models without a tachometer, operate the motorcycle according to the speeds given in Upshift (Acceleration) Gear Speeds: Six Speed and Downshift (Deceleration) Gear Speeds: Six Speed during motorcycle break-in.

2. Up to 500 miles 800 kilometers , vary the engine speed and avoid operating at any steady engine speed for long periods. Engine speed up to 5000 RPM in any gear is permissible.

3. Drive slowly and avoid fast starts at wide open throttle until the engine has warmed up.

4. Avoid lugging the engine by not running the engine at very low speeds in higher gears.

5. Avoid hard braking. New brakes need to be broken-in by moderate use for the first 200

miles 300 kilometers .

Pre-Riding Checklist

⚠WARNING

Read the CONTROLS AND INDICATORS section before riding your motorcycle. Failure to understand the operation of the motorcycle could result in death or serious injury. (00043a)

Before riding your motorcycle at any time, make a general inspection to be sure it is in safe riding condition.

⚠WARNING

Stop the engine when refueling or servicing the fuel system. Do not smoke or allow open flame or sparks near gasoline. Gasoline is extremely flammable and highly explosive, which could result in death or serious injury. (00002a)

⚠WARNING

Avoid spills. Slowly remove filler cap. Do not fill above bottom of filler neck insert, leaving air space for fuel expansion. Secure filler cap after refueling. Gasoline is extremely flammable and highly explosive, which could result in death or serious injury. (00028a)

⚠WARNING

Use care when refueling. Pressurized air in fuel tank can force gasoline to escape through filler tube. Gasoline is extremely flammable and highly explosive, which could result in death or serious injury. (00029a)

1. Verify fuel is present in tank and add fuel if required.
2. Adjust mirrors to proper riding positions.
3. Verify oil is present in oil tank.
4. Check controls to make sure they operate properly. Operate the front and rear brakes, throttle, clutch and shifter. All controls should operate freely without binding.
5. Check steering for proper operation by turning the handlebars through the full operating range. Handlebars should turn smoothly without binding.

⚠WARNING

Be sure tires are properly inflated, balanced and have adequate tread. Inspect your tires regularly and see a Harley-Davidson dealer for replacements. Riding with excessively worn, unbalanced or under-inflated tires can adversely affect stability and handling, which could result in death or serious injury. (00014a)

6. Check tire condition and pressure. Incorrect pressure will result in poor riding characteristics and can affect handling and stability. Refer to tire specifications for correct inflation pressure to use.

⚠WARNING

Be sure headlamp, tail and stop lamp and turn signals are operating properly before riding. Poor visibility of rider to other motorists can result in death or serious injury. (00478b)

7. Check all electrical equipment and switches including the headlamp, stop lamp, turn signals and horn for proper operation.
8. Check for any fuel, oil or hydraulic fluid leaks.
9. Check secondary belt for wear or damage.
10. Service your motorcycle as necessary.

Starting the Engine

General

CAUTION

The engine should be allowed to run slowly for 15-30 seconds. This will allow the engine to warm up and let oil reach all surfaces needing lubrication. Failure to comply can result in engine damage. (00563b)

Do not roll the throttle before starting. Rolling the throttle before starting the motorcycle is unnecessary.

Starting

⚠WARNING

Shift transmission to neutral before starting engine to prevent accidental movement, which could result in death or serious injury. (00044a)

1. Turn ignition/headlamp key switch to IGNITION position. Do not roll the throttle.

   NOTE:

   The engine lamp will light for approximately 4 seconds and you will hear the fuel pump purr for approximately 2 seconds as it operates to fill the fuel lines with gasoline.

2. See Right Handlebar Controls. Turn the off/run switch to RUN position.

3. Pull in clutch lever.

   NOTE:

   To activate the starting system, the clutch interlock circuitry requires that the clutch be disengaged. The clutch lever must be pulled in against the left handlebar grip and/or the transmission must be shifted to the neutral position (with the green neutral lamp lit).

4. Raise the jiffy stand (required on international models).

5. Press the starter button to start the motorcycle.

6. When the engine has started, you can operate your motorcycle as you normally would after raising the jiffy stand.

NOTE:

If the fuel tank becomes completely dry, it may take a few seconds longer to start the motorcycle after filling the tank. It will not be necessary to take any extraordinary measures before starting the motorcycle.

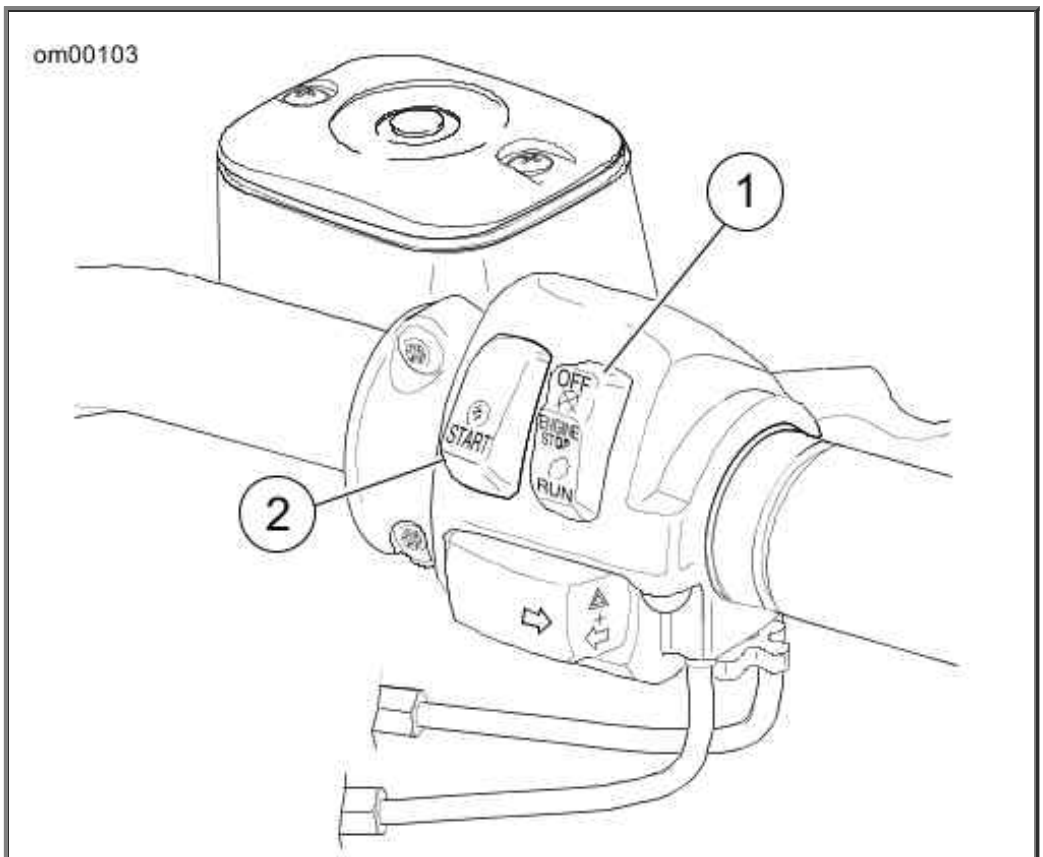

1. Engine off/run switch
2. Engine start switch

Right Handlebar Controls

Engine Idle Temperature Management System

For those riders who frequently find themselves in riding conditions where the vehicle is subjected to prolonged idle conditions or traffic congestion, an optional dealer enabled engine calibration is available. This calibration offers limited rear cylinder cooling with the vehicle stopped while the engine is left at idle. This option is available for original equipment engine calibrations only. See your dealer for details.

Stopping the Engine

1. Stop the engine by turning OFF the engine stop switch on right handlebar.
2. Turn OFF the ignition/headlamp key switch. If the engine should be stalled or stopped in any way, turn off the ignition/headlamp key switch at once to prevent battery discharge.

Shifting Gears

Getting Started

CAUTION

The clutch must be fully disengaged before attempting a gear shift. Failure to fully disengage the clutch can result in equipment damage. (00182a)

Gear shift pattern is first gear down, next five gears up.

1. With motorcycle engine running and jiffy stand retracted, pull the clutch hand lever in against handlebar grip to fully disengage clutch.
2. Push the foot shift lever down to end of its travel and release. The transmission is now in first gear.
3. To start forward motion, release the clutch lever slowly to engage the clutch and at the same time, open throttle gradually.

Upshift (Acceleration)

Refer to Upshift (Acceleration) Gear Speeds: Six Speed. Engage second gear after the motorcycle has reached the appropriate shifting speed.

Upshift (Acceleration) Gear Speeds: Six Speed

GEAR CHANGE	MPH	KPH
First to second	15	25
Second to third	25	40
Third to fourth	35	55
Fourth to fifth	45	70

Fifth to sixth	55	85

1. Close the throttle.
2. Disengage the clutch (pull clutch lever in).
3. See Upshift Pattern: Six Speed. Lift the gear shift lever up to the end of its travel and release.
4. Engage the clutch (release clutch lever) and gradually open the throttle.
5. Repeat the previous steps to engage third, fourth, fifth, and sixth gears.

NOTES:

- *Disengage the clutch completely before each gear change.*
- *Partially close the throttle so the engine will not drag when clutch is again engaged (clutch lever released).*

Downshift (Deceleration)

⚠WARNING

Do not downshift at speeds higher than those listed in the Changing Gear Speeds table. Shifting to lower gears when speed is too high can cause the rear wheel to lose traction and lead to loss of vehicle control, which could result in death or serious injury. (00045a)

Gear shift pattern is first gear down; next five gears up. Refer to Downshift (Deceleration) Gear Speeds: Six Speed for shifting speeds.

Downshift (Deceleration) Gear Speeds: Six Speed

GEAR CHANGE	MPH	KPH
Sixth to fifth	50	80
Fifth to fourth	40	65
Fourth to third	30	50
Third to second	20	30
Second to first	10	15

NOTE:

The shifting points shown in the tables constitute a recommendation. Vehicle owners may determine that their own individual shifting patterns may differ than those stated and are additionally appropriate for individual riding styles.

See Downshift Pattern: Six Speed. When engine speed decreases, as in climbing a hill or running at a reduced speed, shift to the next lower gear while partially closing the throttle so the

engine accelerates as soon as the clutch lever is released.

NOTES:

- *Disengage the clutch completely before each gear change.*
- *Partially close the throttle so the engine will not drag when clutch is again engaged (clutch lever released).*

CAUTION

Shift to neutral before stopping engine. Shifting mechanism can be damaged by shifting gears while engine is stopped. (00183a)

The gear shifter mechanism permits shifting the transmission to neutral from either first or second gear.

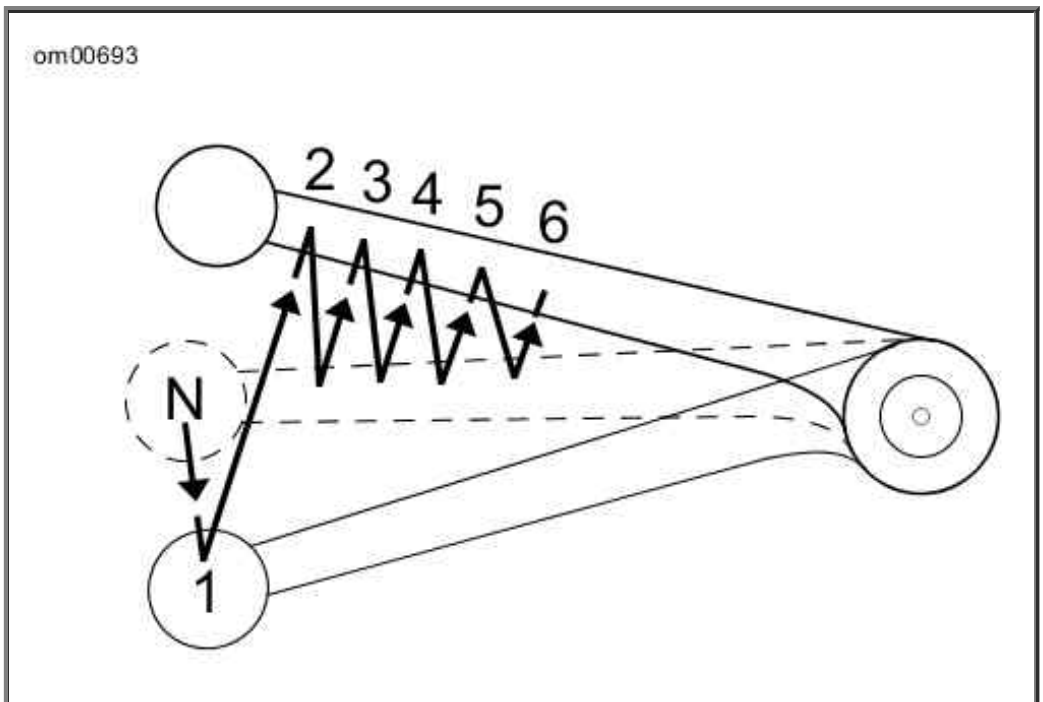

Upshift Pattern: Six Speed

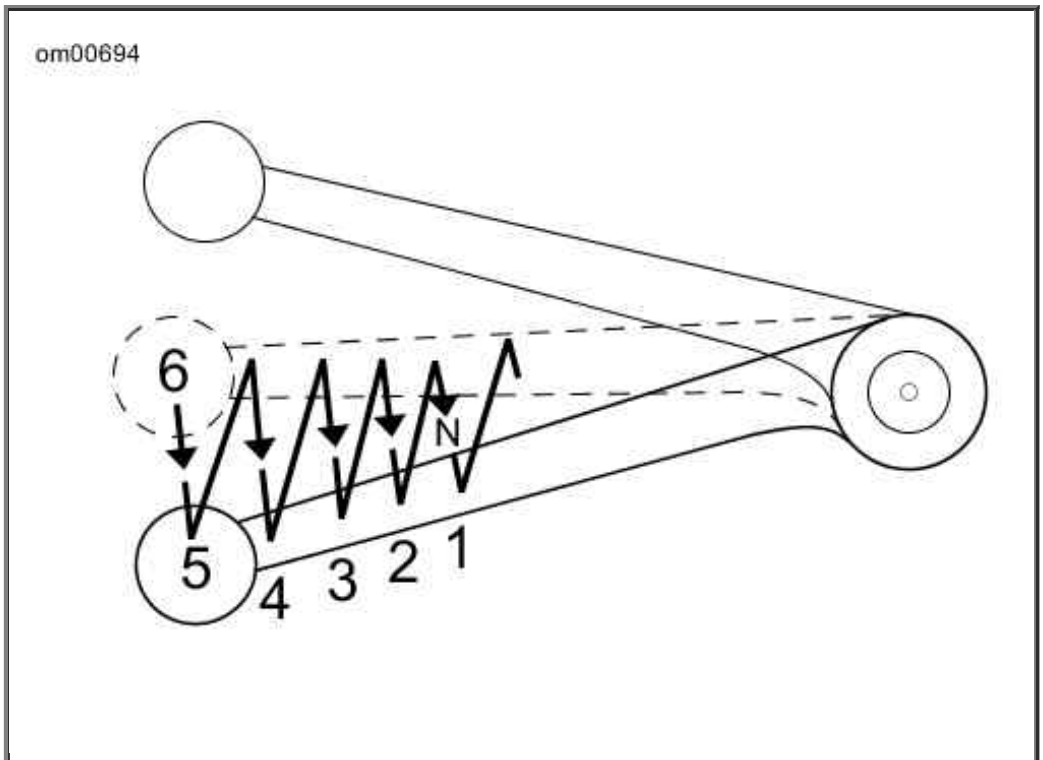

Downshift Pattern: Six Speed

Maintenance and Lubrication

Safe Operating Maintenance

⚠WARNING

Perform the service and maintenance operations as indicated in the regular service interval table. Lack of regular maintenance at the recommended intervals can affect the safe operation of your motorcycle, which could result in death or serious injury. (00010a)

Good maintenance creates a safe motorcycle. A careful check of certain equipment must be made after periods of storage. Also, frequently inspect the motorcycle between the regular service intervals to determine if additional maintenance is necessary.

Check the following items:

1. Tires for correct pressure, abrasions or cuts.
2. Belt and primary chain for proper tension, wear or damage.
3. Brakes, steering and throttle for responsiveness and freedom from binding.
4. Brake fluid level and condition. Hydraulic lines and fittings for leaks. Also, check brake pads and discs for wear.
5. Cables for fraying or crimping and free operation.
6. Engine oil and primary chaincase/transmission fluid levels.

7. Headlamp, tail lamp, brake lamp and turn signals for proper operation.

Break-in Maintenance: Softail Models

NOTE:

The performance of new motorcycle initial service is required to keep your new motorcycle warranty in force and to assure proper emissions system operation.

Refer to Regular Service Intervals: 2009 Softail Models. After a new motorcycle has been ridden its first 1000 miles (1600 kilometers), it should be taken to an authorized Harley-Davidson dealer for initial service operations.

NOTE:

Because of unique design features, Springer models require the first scheduled maintenance at 500 miles (800 kilometers).

Engine Lubrication

CAUTION

Do not switch lubricant brands indiscriminately because some lubricants interact chemically when mixed. Use of inferior lubricants can damage the engine. (00184a)

Engine oil is a major factor in the performance and service life of the engine. Always use the proper grade of oil for the lowest temperature expected before the next scheduled oil change. Refer to Recommended Engine Oils. Your authorized dealer has the proper oil to suit your requirements.

If it is necessary to add oil and Harley-Davidson oil is not available, use an oil certified for diesel engines. Acceptable diesel engine oil designations include: CF-4, CG-4, CH-4 and CI-4.

The preferred viscosities for the diesel engine oils in descending order are: 20W50, 15W40 and 10W40.

At the first opportunity, see an authorized dealer to change back to 100 percent Harley-Davidson oil.

Recommended Engine Oils

H-D TYPE	VISCOSITY	H-D RATING	LOWEST AMBIENT TEMPERATURE	COLD WEATHER STARTS BELOW 50° F (10° C)
H-D Multi-grade	SAE 10W40	HD 360	Below 40° F 4° C	Excellent
H-D Multi-grade	SAE 20W50	HD 360	Above 40° F 4° C	Good
H-D Regular Heavy	SAE 50	HD 360	Above 60° F 16° C	Poor
H-D Extra Heavy	SAE 60	HD 360	Above 80° F 27° C	Poor

Checking Oil Level: Softail Models

Engine oil level should be checked only when engine is at normal operating temperature.

- Check engine oil supply at each complete fuel refill.
- Refer to Regular Service Intervals: 2009 Softail Models. Oil should be changed at proper intervals in normal service at warm or moderate temperatures.
- Oil change intervals should be shorter in cold weather. See Winter Lubrication.

NOTES:

- *See Oil Dipstick Location: FXCW/FXCWC Models. On FXCW and FXCWC models, remove the dipstick by unscrewing the cap.*
- *See Checking Oil Tank Level: Softail Models. On all other models, remove the dipstick by pulling out the oil filler cap. To install, insert dipstick in oil tank and push the filler cap in until seated in the fill spout.*
- *The motorcycle should be on jiffy stand when checking oil level.*

CAUTION

Oil level cannot be accurately measured on a cold engine. For pre-ride inspection, with motorcycle leaning on jiffy stand on level ground, oil should register on dipstick between arrows when engine is cold. Do not add oil to bring the level to the FULL mark on a COLD engine. (00185a)

CAUTION

Do not allow hot oil level to fall below Add/Fill mark on dipstick. Doing so can result in equipment damage and/or equipment malfunction. (00189a)

CAUTION

Do not overfill oil tank. Doing so can result in oil carryover to the air cleaner leading to equipment damage and/or equipment malfunction. (00190a)

Oil Level Cold Check

Perform engine oil level **COLD CHECK** as follows:

1. For preride inspection with the vehicle on jiffy stand on level ground, remove and wipe off the dipstick. Install the dipstick back into the oil tank.

   NOTE:

   For FXCW/FXCWC models, thread the filler cap onto the spout until tight. On all other models, push the filler cap until fully seated in the spout.

2. See Engine Oil Level: FXCW/FXCWC Models (FXCW/FXCWC) or Engine Oil Level: Softail Models (all other models). Remove the dipstick and verify oil registers on the dipstick between the two marks.
    a. If oil level registers on the dipstick, proceed to Oil Level Hot Check.
    b. If oil does not register on the dipstick, proceed to step 3.
3. With the dipstick removed, look into the dipstick opening and verify the oil level is at the filler neck weld.
    a. If the oil level is at or near the filler neck weld, proceed to Oil Level Hot Check.
    b. If the oil level is not at or near the filler neck weld, add only enough oil to bring the level to the filler neck weld. Then proceed to Oil Level Hot Check.

Oil Level Hot Check

Perform engine oil level **HOT CHECK** as follows:

1. Ride motorcycle until engine is at normal operating temperature.

    NOTE:

    The engine will require a longer warm up period in colder weather.

2. With the vehicle upright on level ground, allow engine to idle for 1-2 minutes. Turn engine off.
3. With vehicle on jiffy stand remove and wipe off the dipstick. Install the dipstick back into the oil tank.

    NOTE:

    For FXCW/FXCWC models, thread the filler cap onto the spout until tight. On all other models, push the filler cap until fully seated in the spout.

4. See Engine Oil Level: FXCW/FXCWC Models (FXCW/FXCWC) or Engine Oil Level: Softail Models (all other models). Remove the dipstick and note the level of the oil. Add only enough oil to bring the level to the FULL mark on the dipstick. Do not overfill.

    NOTE:

    Refer to Recommended Engine Oils. Use only recommended oil specified under Engine Lubrication.

5. Start engine and carefully check for oil leaks around drain plug and oil filter.

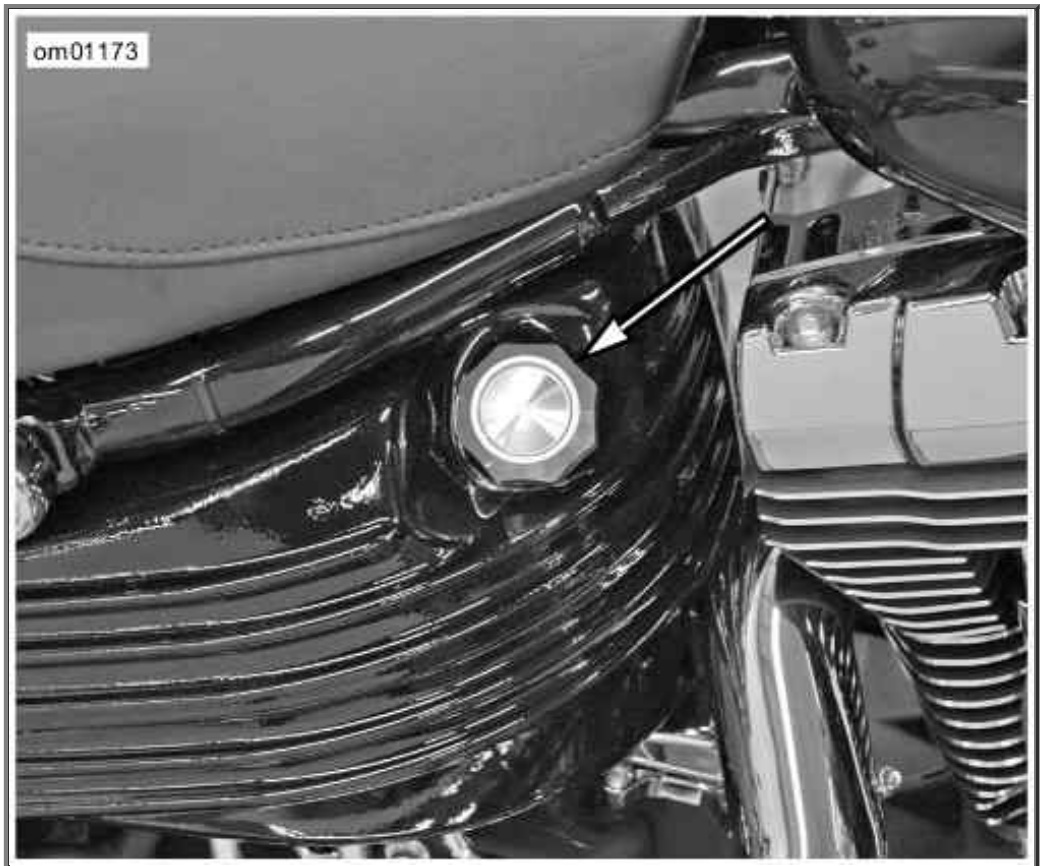

Oil Dipstick Location: FXCW/FXCWC Models

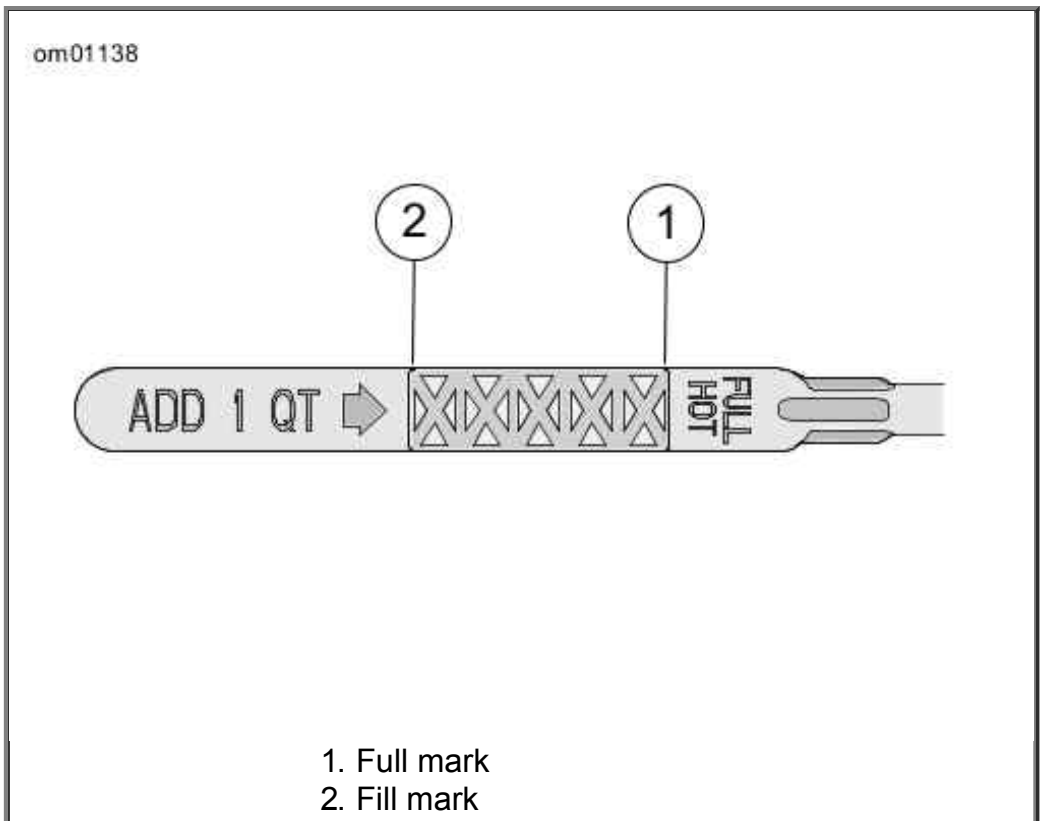

1. Full mark
2. Fill mark

Engine Oil Level: FXCW/FXCWC Models

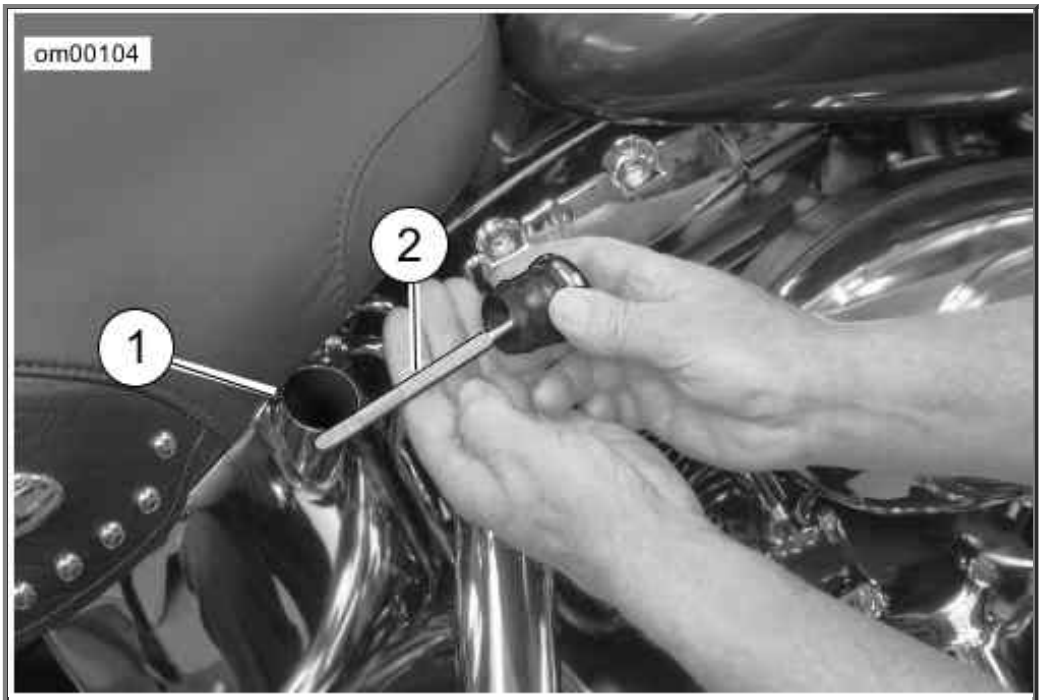

1. Filler neck
2. Dipstick

Checking Oil Tank Level: Softail Models

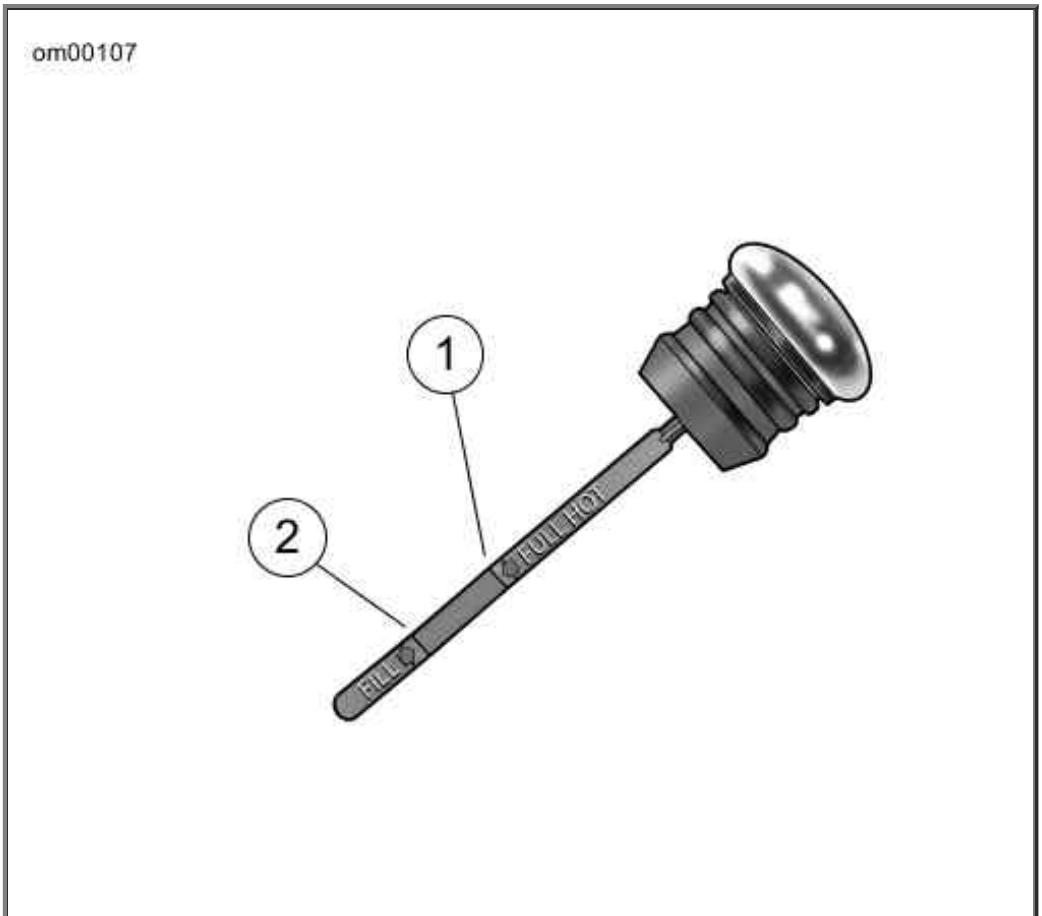

1. Full mark
2. Fill mark

Engine Oil Level: Softail Models

Changing Oil and Oil Filter: Softail Models

Oil filter is located on an oil filter mount in front of the engine.

CAUTION

Do not switch lubricant brands indiscriminately because some lubricants interact chemically when mixed. Use of inferior lubricants can damage the engine. (00184a)

⚠WARNING

Be sure that no lubricants or fluids get on tires, wheels or brakes when changing fluid. Traction can be adversely affected, which could result in loss of control of the motorcycle and death or serious injury. (00047d)

Twin Cam 96B equipped vehicles require the premium oil filter (Part No. 63798-99A Chrome or Part No. 63731-99A Black).

1. See Oil Dipstick Location: FXCW/FXCWC Models (FXCW/FXCWC) or Checking Oil Tank Level: Softail Models (all other models). On FXCW/FXCWC models, unscrew oil filler cap and remove. On other models, pull steadily on filler cap while moving plug back and forth to remove.

2. See Oil Tank Drain Plug: Softail Models. Remove engine oil drain plug with o-ring (2). Allow oil to completely drain into a suitable container.

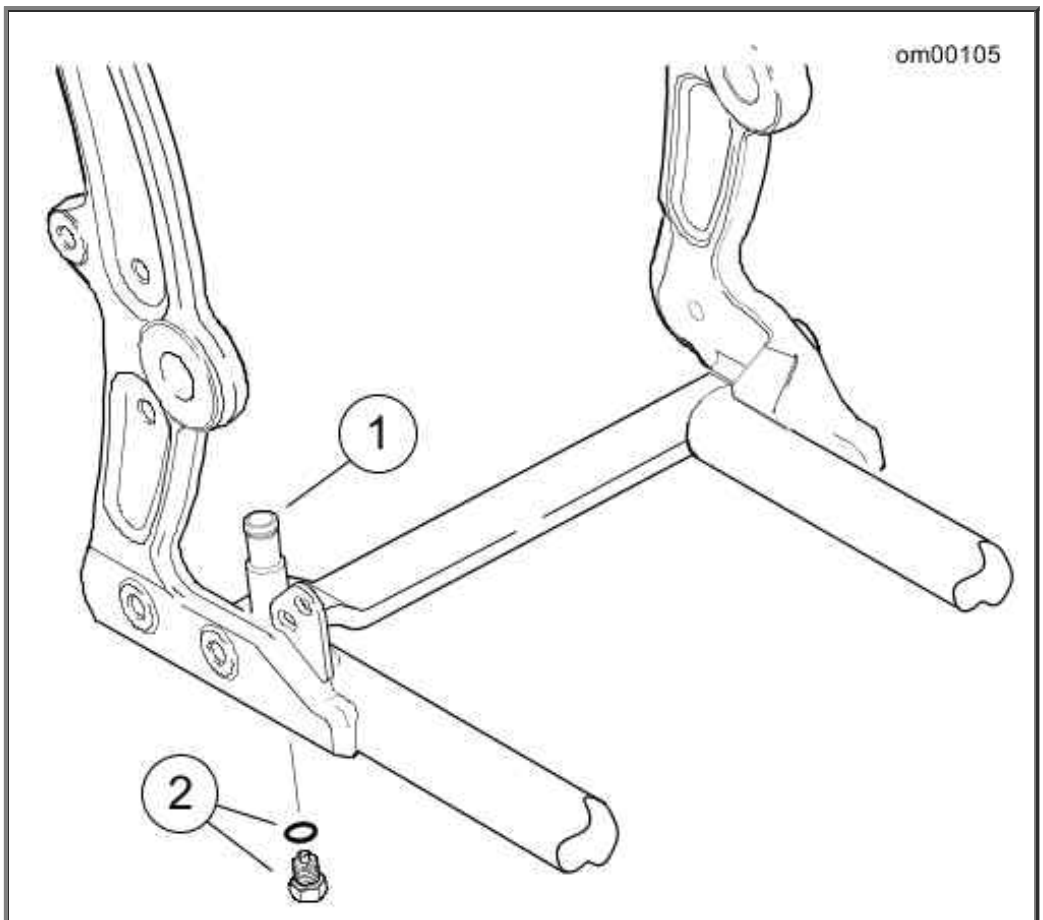

1. Frame connection for oil tank drain hose
2. Oil tank drain plug and o-ring

Oil Tank Drain Plug: Softail Models

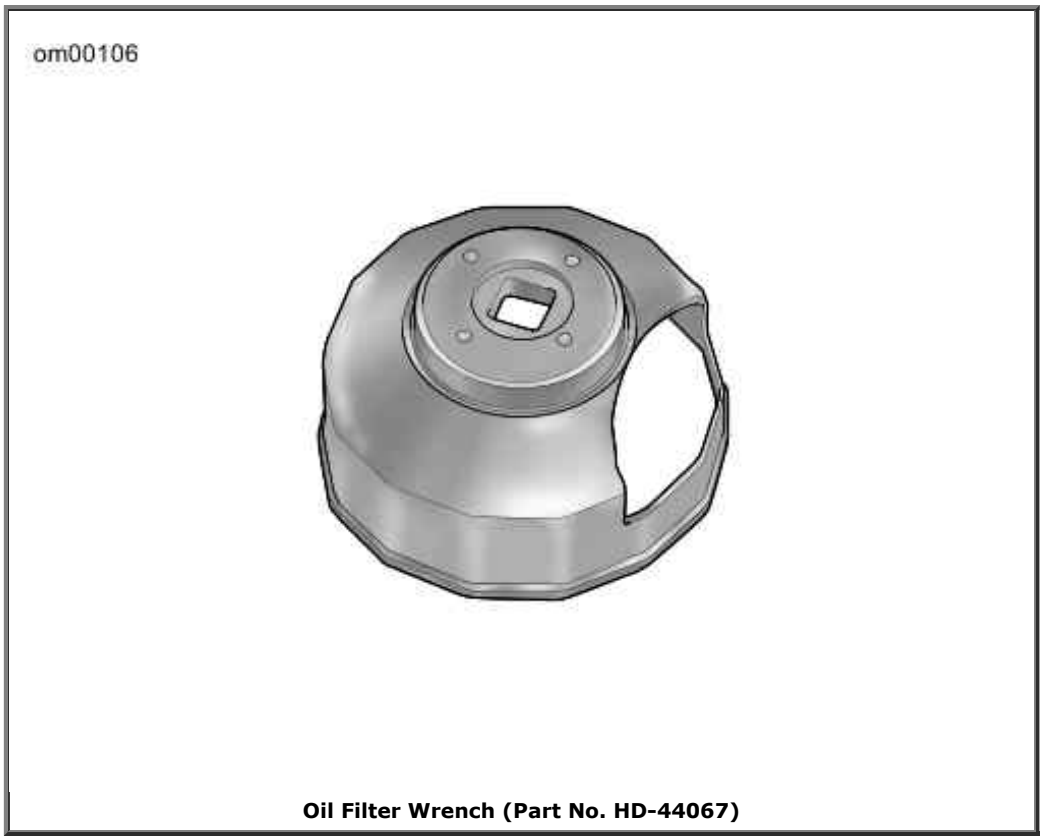

Oil Filter Wrench (Part No. HD-44067)

CAUTION

Use Harley-Davidson oil filter wrench for filter removal. This tool can prevent damage to crankshaft position sensor and/or sensor cable. (00192b)

NOTE:

Dispose of oil and oil filter in accordance with local regulations.

3. See Oil Filter Wrench (Part No. HD-44067). Remove the oil filter using the OIL FILTER WRENCH HD-44067 . Clean the oil filter mount flange of any old gasket material (surface should be smooth and free of any debris or old gasket material).

4. Inspect o-ring for tears or damage. Replace if required. Wipe any foreign material from plug.

5. Install o-ring and drain plug and tighten to 14-21 ft-lbs (19.0-28.5 Nm).

6. See Applying Thin Oil Film. Apply a thin film of oil to gasket contact surface on mounting plate, gasket and new oil filter.

7. Screw filter onto adapter until gasket contacts plate surface, then apply another 3/4-1 full turn.

8. Fill oil tank with no more than 3.50 U.S. quarts 3.31 liters of oil. Use the proper grade of oil for the lowest temperature expected before next oil change.

CAUTION

Do not overfill oil tank. Doing so can result in oil carryover to the air cleaner leading to equipment damage and/or equipment malfunction. (00190a)

9. Install the filler cap.
10. Start engine and carefully check for oil leaks around drain plug and oil filter.
11. Check engine oil level. Install filler cap.

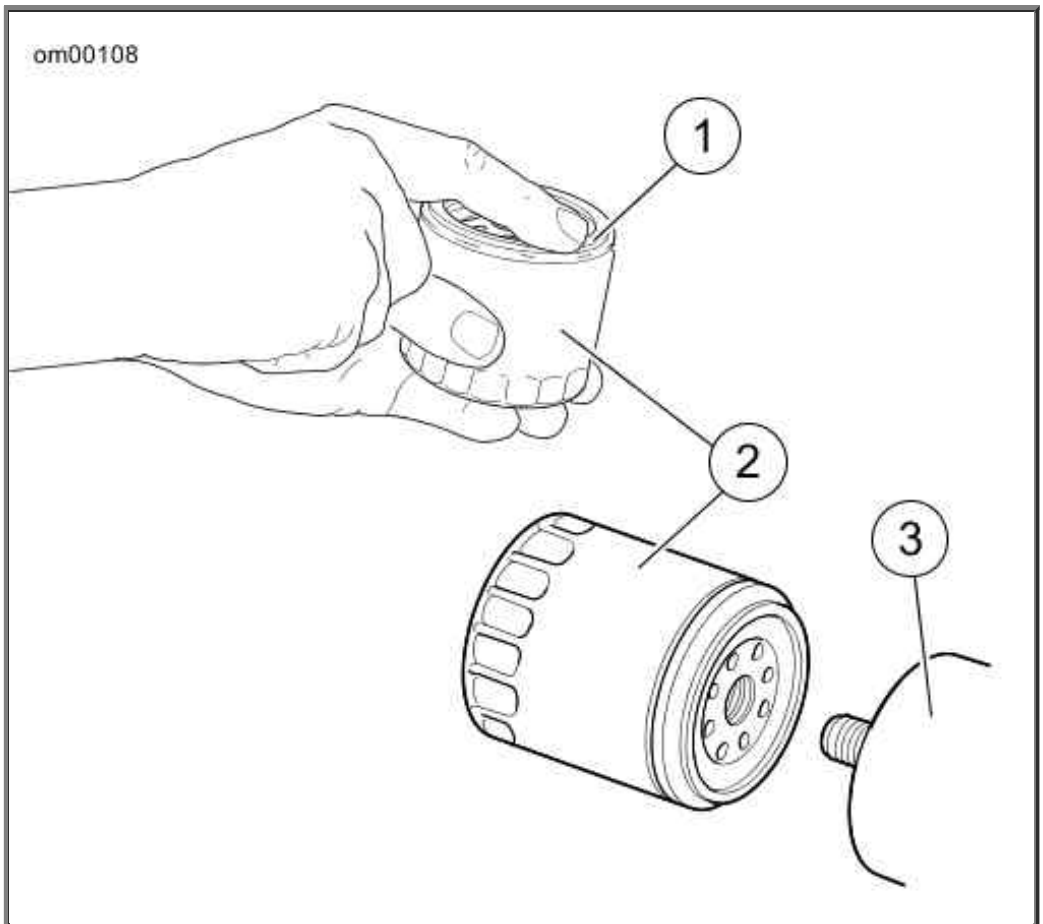

1. Thin oil film ONLY
2. Oil filter
3. Mounting plate

Applying Thin Oil Film

Winter Lubrication

In colder climates, the engine oil should be changed often. If motorcycle is used frequently for short trips, less than 15 miles 24 kilometers , in ambient temperatures below 60° F 16° C , oil change intervals should be reduced to 1500 miles 2400 kilometers . Motorcycles used only for short runs must have a thorough tank flush-out before **new** oil is put in. The tank flush-out should be performed by an authorized dealer or qualified technician.

NOTE:

The further below freezing the temperature drops, the shorter the oil change interval should be.

Water vapor is a normal by-product of combustion in any engine. During cold weather operation, some of the water vapor condenses to liquid form on the cool metal surfaces inside the engine. In freezing weather this water will become slush or ice and, if allowed to accumulate too long, may block the oil lines and cause damage to the engine.

If the engine is run frequently and allowed to thoroughly warm up, most of this water will become vapor again and will be blown out through the crankcase breather.

If the engine is not run frequently and allowed to thoroughly warm up, this water will accumulate, mix with the engine oil and form a sludge that is harmful to the engine.

Transmission Lubrication: Softail Models

The transmission lubricant level should be checked monthly.

Refer to Regular Service Intervals: 2009 Softail Models. The transmission should be drained and refilled with fresh lubricant at proper intervals.

NOTE:

When checking the transmission lubricant level, the motorcycle should be leaning on the jiffy stand. Allow a short period of time to equalize lubricant level in the transmission compartments.

Check Lubricant Level

1. Park motorcycle on the jiffy stand.
2. See Transmission Filler Plug/Dipstick (FXCWC shown). Remove the threaded filler plug/dipstick by turning the plug counterclockwise.
3. See Transmission Filler Plug/Dipstick Lubricant Level. Wipe off filler plug/dipstick. Place in filler hole and remove. (Dipstick should rest on lip of filler. Do not screw in tight. Lubricant level should be between the upper and lower ends of the oil level indicator marks on the dipstick.

⚠WARNING

Be sure that no lubricants or fluids get on tires, wheels or brakes when changing fluid. Traction can be adversely affected, which could result in loss of control of the motorcycle and death or serious injury. (00047d)

CAUTION

When draining or adding lubricant, do not allow dirt, debris or other contaminants to enter the engine. (00198a)

4. Add lubricant, if necessary. Do not overfill or leakage may occur.

   NOTES:
   - *When filling the transmission, use GENUINE Harley-Davidson FORMULA+ TRANSMISSION AND PRIMARY CHAINCASE LUBRICANT (Part No. 99851-05 quart).*
   - *The transmission fluid capacity is approximately 32 ounces (0.95 liters).*
   - *Inspect o-ring for tears or damage. Replace if required. Wipe any foreign material from plug.*

5. Install threaded filler plug/dipstick and tighten to 25-75 in-lbs (2.8-8.5 Nm).

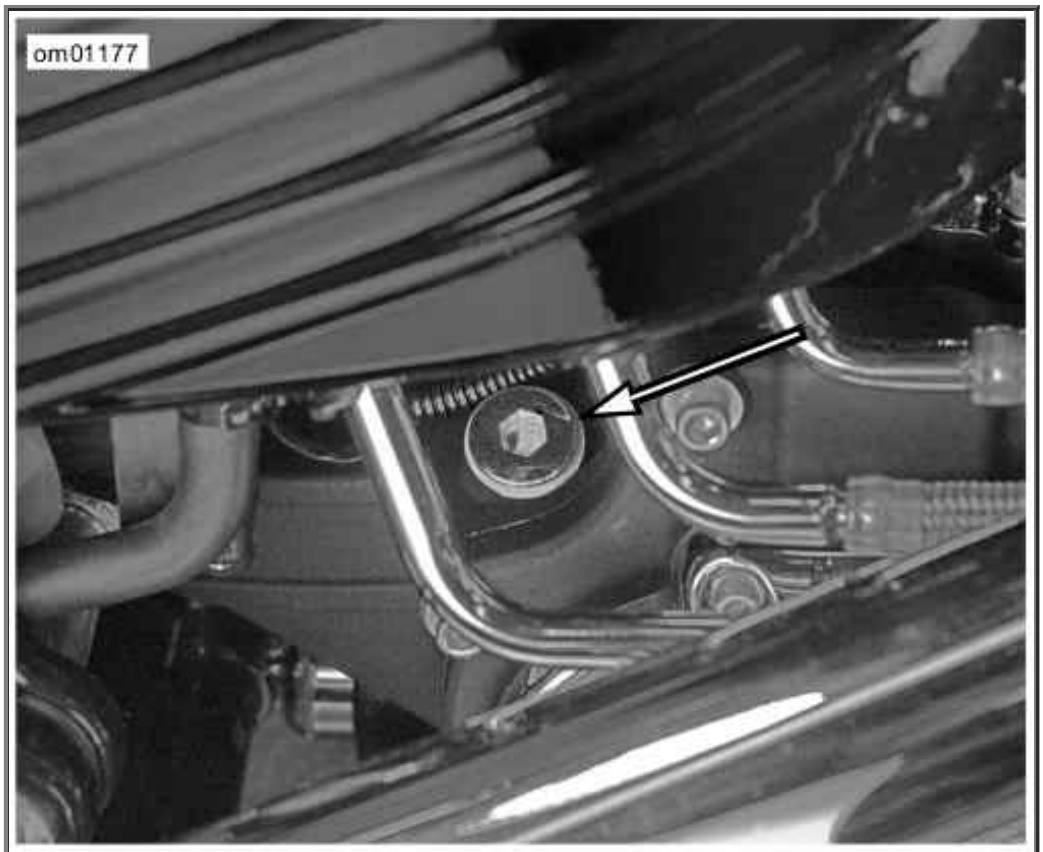

Transmission Filler Plug/Dipstick (FXCWC shown)

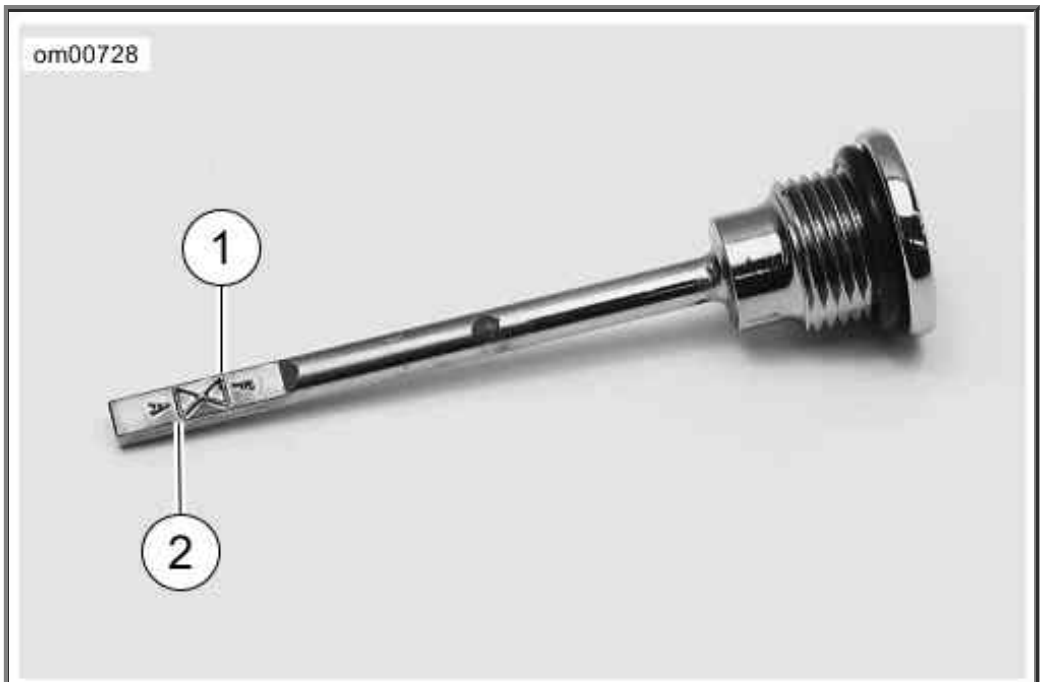

1. FULL
2. ADD

Transmission Filler Plug/Dipstick

Lubricant Level

Changing Transmission Fluid

1. See Transmission Filler Plug/Dipstick (FXCWC shown). Remove the transmission filler

plug/dipstick.

2. See Transmission Drain Plug (Bottom View). Remove transmission drain plug and drain lubricant into a suitable container.

CAUTION

When draining or adding lubricant, do not allow dirt, debris or other contaminants to enter the engine. (00198a)

NOTE:

Do not overfill or leakage may occur. The transmission fluid capacity is approximately 32 ounces (0.95 liters).

⚠WARNING

Be sure that no lubricants or fluids get on tires, wheels or brakes when changing fluid. Traction can be adversely affected, which could result in loss of control of the motorcycle and death or serious injury. (00047d)

NOTE:

Dispose of transmission lubricant in accordance with local regulations.

3. Inspect o-ring for tears or damage on the drain plug. Replace if required. Wipe any foreign material from plug.

4. Install drain plug and tighten to 14-21 ft-lbs (19.0-28.5 Nm).

5. Fill the transmission with 32 oz. (0.95 liters) of GENUINE Harley-Davidson FORMULA+ TRANSMISSION AND PRIMARY CHAINCASE LUBRICANT (Part No. 99851-05 quart).

6. Install threaded filler/check plug and tighten to 25-75 in-lbs (2.8-8.5 Nm).

7. Start engine and carefully check for oil leaks around drain plug.

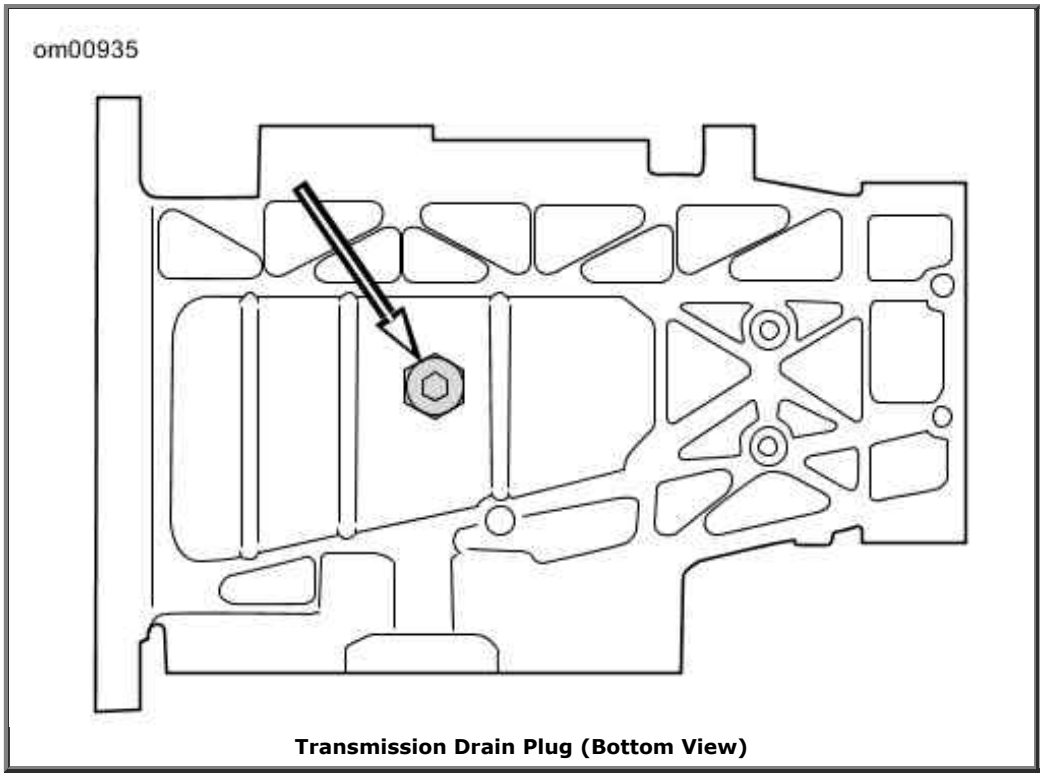

Transmission Drain Plug (Bottom View)

Primary Chaincase Lubrication

Lubrication is a major factor in the performance and service life of the clutch components.

Refer to Regular Service Intervals: 2009 Softail Models. The primary chaincase should be drained and refilled with fresh lubricant at proper intervals.

NOTE:

Use only GENUINE Harley-Davidson FORMULA+ TRANSMISSION AND PRIMARY CHAINCASE LUBRICANT (Part No. 99851-05 quart) when changing primary chaincase lubricant.

Chaincase Lubricant

Refer to Regular Service Intervals: 2009 Softail Models. The chaincase lubricant should be drained and refilled with fresh lubricant at proper intervals.

CAUTION

Do not overfill the primary chaincase with lubricant. Overfilling can cause rough clutch engagement, incomplete disengagement, clutch drag and/or difficulty in finding neutral at engine idle. (00199b)

Changing Chaincase Lubricant

1. Ride motorcycle until engine is warmed up to normal operating temperature.

CAUTION

When draining or adding lubricant, do not allow dirt, debris

When draining or adding lubricant, do not allow dirt, debris or other contaminants to enter the engine. (00198a)

2. See Clutch Cover. Using a T27 TORX drive head, remove five screws (3) (with captive washers) to free clutch inspection cover (2) from primary chaincase cover.

3. See Removing Chaincase Drain Plug. Remove magnetic drain plug at bottom of inner primary chaincase cover. Drain lubricant into suitable container.

   NOTE:

   Dispose of chaincase lubricant in accordance with local regulations.

4. Clean drain plug. If plug has accumulated a lot of debris, inspect the condition of the chaincase components.

5. Install **new** o-ring on drain plug.

6. Install drain plug back into inner primary chaincase cover. Tighten plug to 14-21 ft-lbs (19-28 Nm).

CAUTION

Do not overfill the primary chaincase with lubricant. Overfilling can cause rough clutch engagement, incomplete disengagement, clutch drag and/or difficulty in finding neutral at engine idle. (00199b)

7. Pour 32 ounces (0.95 liter) of GENUINE Harley-Davidson FORMULA+ TRANSMISSION AND PRIMARY CHAINCASE LUBRICANT (Part No. 99851-05 quart) through the clutch inspection cover opening.

⚠WARNING

Be sure that no lubricants or fluids get on tires, wheels or brakes when changing fluid. Traction can be adversely affected, which could result in loss of control of the motorcycle and death or serious injury. (00047d)

CAUTION

When draining or adding lubricant, do not allow dirt, debris or other contaminants to enter the engine. (00198a)

   NOTE:

   Use only GENUINE Harley-Davidson FORMULA+ TRANSMISSION AND PRIMARY CHAINCASE LUBRICANT (Part No. 99851-05 quart).

8. Install clutch inspection cover and **new** gasket as follows:

   a. Thoroughly wipe all lubricant from cover mounting surface and groove in chaincase.

   b. Position gasket in groove in clutch inspection cover and press each of the nubs on

gasket into the groove. The nubs will retain the seal in position.

c. Insert screw (with captive washer) through clutch inspection cover and thread it into the top cover screw hole.

d. Start the remaining four screws (with captive washers).

e. Using a T27 TORX drive head, alternately tighten screws to 84-108 in-lbs (9.5-12.2 Nm).

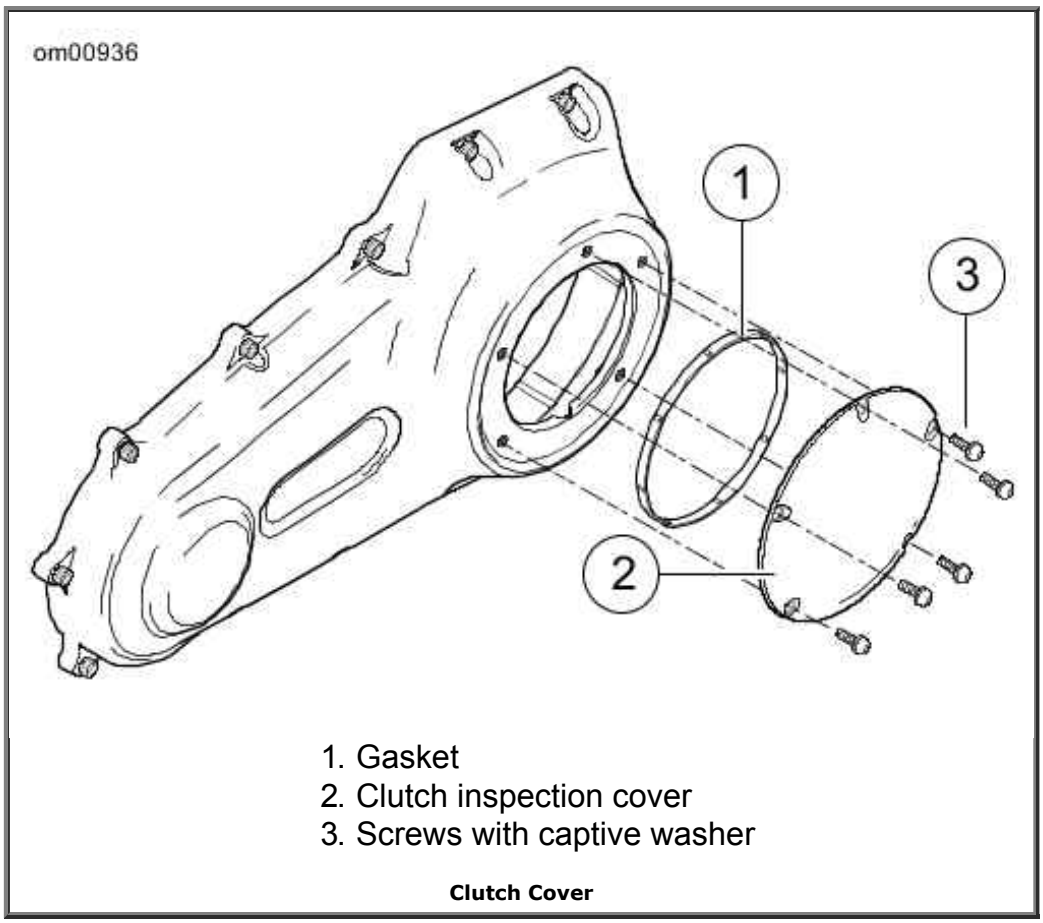

1. Gasket
2. Clutch inspection cover
3. Screws with captive washer

Clutch Cover

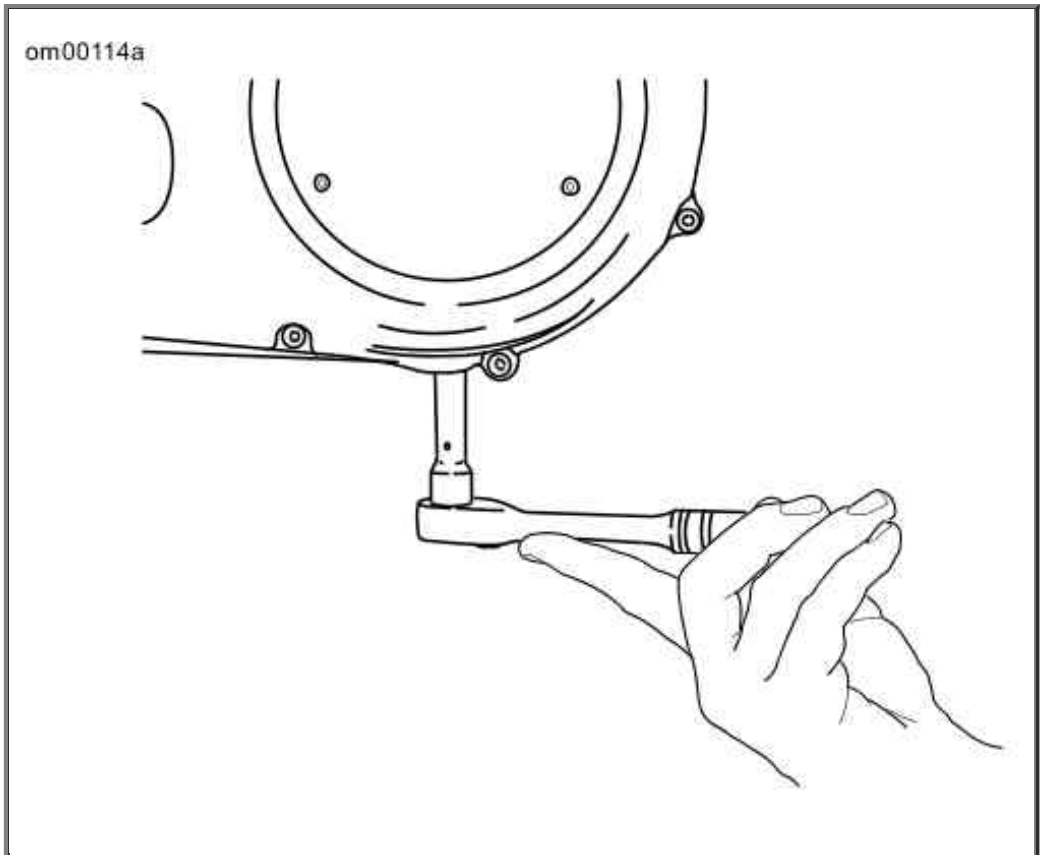

Removing Chaincase Drain Plug

Rear Drive Belt: Softail Models

General

The inner tooth surface of the secondary belt has a thin coating of polyethylene lubricant. During initial operation, this coating will wear off as it is burnished into the belt fabric. This is a normal condition and not an indication of belt wear.

Refer to Regular Service Intervals: 2009 Softail Models. Belt tension is set at the factory and should be checked after the first 1000 miles 1600 kilometers and at proper intervals thereafter.

Checking Deflection

See Check Belt Deflection. Check belt deflection at the loosest spot in the belt with the transmission in neutral and the motorcycle at ambient temperature. Use the BELT TENSION GAUGE HD-35381-A to apply 10 lbs. 4.5 kg of force at the midpoint of the bottom belt strand with motorcycle resting on jiffy stand.

Belt deflection should be within specification as shown in Belt Deflection: Softail Models. If belt tension adjustment is necessary, see a Harley-Davidson dealer or follow the instructions given in the applicable Service Manual.

⚠WARNING

Be sure wheel and brake caliper are aligned. Riding with a

misaligned wheel or brake caliper can cause the brake disc to bind and lead to loss of control, which could result in death or serious injury. (00050a)

Check rear brake caliper position on rear brake disc. Disc should run true within brake caliper.

Belt Deflection: Softail Models

MODELS	INCHES	MILLIMETERS
FLSTN, FLSTSB	1/4-5/16	6.4-7.9
All other models	9/16-5/8	14.3-15.9

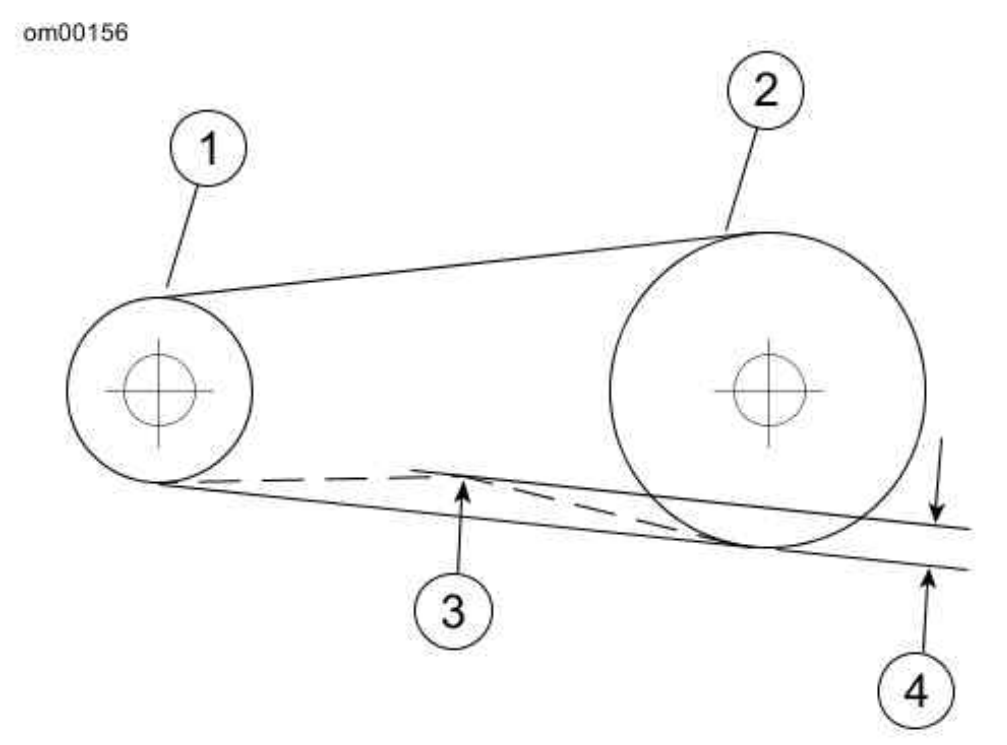

1. Transmission sprocket
2. Rear wheel sprocket
3. Force of 10 lbs (4.5 kg)
4. Deflection

Check Belt Deflection

Chassis Lubrication

Refer to Regular Service Intervals: 2009 Softail Models for all maintenance schedules.

CAUTION

Do not switch lubricant brands indiscriminately because some lubricants interact chemically when mixed. Use of inferior lubricants can damage the engine. (00184a)

1. Use recommended special purpose grease for steering head bearings. Use a multipurpose

chassis grease for other applications.

2. Remove and lubricate handlebar throttle control grip sleeve with fresh graphite at proper intervals.
3. Lubricate throttle control cables and clutch control cable at proper intervals.
4. Lubricate front brake hand lever and clutch control hand lever only if necessary.
5. Inspect rear fork pivot shaft bearings.
6. Pack the steering head bearings with fresh grease at proper intervals.
7. Lubricate the jiffy stand mechanism with LOCTITE AEROSOL ANTI-SEIZE at proper intervals.

NOTE:

For model specific information regarding the chassis lubrication, refer to the appropriate Service Manual or see a Harley-Davidson dealer.

Oil Applications

Refer to Regular Service Intervals: 2009 Softail Models for all control connections and parts. Vehicle should be oiled at regular intervals, particularly after washing motorcycle or driving in wet weather.

Front Fork Oil

Refer to Regular Service Intervals: 2009 Softail Models. Have a Harley-Davidson dealer drain the front fork oil and refill at proper intervals. If fork does not appear to be working properly or an appreciable amount of oil leakage should develop, see a Harley-Davidson dealer. If there is insufficient oil in either side of fork, the rebound action will be incorrect.

Fuel Filter

Fuel injected motorcycles have a fuel filter attached to the fuel pump.

NOTE:

For model specific information regarding fuel filter maintenance, refer to the appropriate Service Manual or see a Harley-Davidson dealer.

Clutch

CAUTION

The clutch control cable must be oiled and adjusted periodically to compensate for lining wear. See Service Interval Table. Failure to oil and adjust the clutch control cable can result in equipment damage. (00203a)

The need for attention to clutch and controls will be indicated by the clutch slipping under load or

dragging when released. In this situation, check the control cable adjustment first. See a Harley-Davidson dealer for proper service.

Hydraulic Lifters

The hydraulic lifters are self-adjusting. They automatically adjust length to compensate for engine expansion and valve mechanism wear. This keeps the valve mechanism free of lash when the engine is running.

When starting an engine which has been turned off even for a few minutes, the valve mechanism may be slightly noisy until the hydraulic units completely refill with oil. If at any time the valve mechanism becomes abnormally noisy, other than for a short period immediately after engine is started, it is an indication that one or more of the hydraulic units may not be functioning properly.

Always check the oil supply in the oil tank first since normal circulation of oil through the engine is necessary for proper operation of the hydraulic units.

If there is oil in the tank, the units may not be functioning properly because of dirt in the oil supply passages leading to the lifter units. See a Harley-Davidson dealer for service.

Front Fork Bearings

⚠WARNING

Adjustments to front fork bearings should be performed by a Harley-Davidson dealer. Improperly adjusted bearings can adversely affect handling and stability, which could result in death or serious injury. (00051a)

Refer to Regular Service Intervals: 2009 Softail Models. Check front fork for proper bearing adjustment and lubricate bearings at proper intervals.

With motorcycle front end raised off the floor, be sure front fork turns freely without any binding or interference and that there is no appreciable front to rear fork shake indicating excessive bearing looseness. Steering head bearings should be adjusted according to Service Manual procedure, if necessary.

Rear Fork Pivot Shaft

Refer to Regular Service Intervals: 2009 Softail Models. Check the tightness of the rear fork pivot shaft fastener at proper intervals.

NOTE:

For model specific information regarding the rear fork pivot shaft, refer to the appropriate Service Manual or see a Harley-Davidson dealer.

Brakes

⚠WARNING

Inspect brake pads for wear at service maintenance

intervals. If you ride under adverse conditions (steep hills, heavy traffic, etc.), inspect more frequently. Excessively worn brake pads can lead to brake failure, which could result in death or serious injury. (00052a)

NOTES:

- *Master cylinder cover specifies correct brake fluid.*
- *When adding or changing brake fluid, be sure to use only the type specified for your motorcycle.*
- *Use only Harley-Davidson D.O.T. 4 HYDRAULIC BRAKE FLUID (Part No. 99953-99A).*
- *Do not mix D.O.T. 4 with D.O.T. 5 brake fluid.*

1. Refer to Regular Service Intervals: 2009 Softail Models. Check brake pads and brake discs for wear at proper intervals.

2. Check the fluid level in the master cylinder reservoirs at proper intervals.

3. If level is low, clean dirt and debris from reservoir cover before removing.

CAUTION

D.O.T. 4 brake fluid will damage painted and body panel surfaces it comes in contact with. Always use caution and protect surfaces from spills whenever brake work is performed. Failure to comply can result in cosmetic damage. (00239b)

⚠CAUTION

Direct contact of D.O.T. 4 brake fluid with eyes can cause irritation. Avoid eye contact. In case of eye contact flush with large amounts of water and get medical attention. Swallowing large amounts of D.O.T. 4 brake fluid can cause digestive discomfort. If swallowed, obtain medical attention. Use in well ventilated area. KEEP OUT OF REACH OF CHILDREN. (00240a)

4. Add D.O.T. 4 HYDRAULIC BRAKE FLUID (Part No. 99953-99A) if necessary.

NOTE:

Use only D.O.T. 4 HYDRAULIC BRAKE FLUID (Part No. 99953-99A) approved for brake system use and available from your Harley-Davidson dealer.

Harley-Davidson has provided your new motorcycle with the optimum brake pad friction material available. It is selected to give the best performance possible under dry, wet and high operating temperature conditions. It exceeds all regulatory requirements currently in effect. However, during some braking conditions you may experience noise. This is normal for this friction material.

⚠WARNING

Brakes are a critical safety component. Contact a Harley-Davidson dealer for brake repair or replacement.

Improperly serviced brakes can adversely affect brake performance, which could result in death or serious injury. (00054a)

See Brake Friction Material. Visual inspection of brake pads can be made without removing the caliper. View the lower area of each caliper with a flashlight.

⚠WARNING

Perform routine scheduled brake maintenance. Lack of maintenance at recommended intervals can adversely affect brake performance, which could result in death or serious injury. (00055a)

⚠WARNING

Always replace brake pads in complete sets for correct and safe brake operation. Improper brake operation could result in death or serious injury. (00111a)

NOTES:

- *If the brake pad friction material is 0.04 in. 1.02 mm thick or less, the pads must be replaced immediately.*
- *Always replace brake pads in pairs.*

The rear brake outer pad on all models can be measured from the caliper bracket side using a thin plastic 6.0 in. 152.4 mm rule. Place the rule against the brake disc through the space alongside the caliper.

The outer surface of the brake pad backing plate should measure 0.04 in. 1.02 mm or more away from the brake disc.

NOTE:

Replace pads if brake friction material is 0.04 in. 1.02 mm or less above the backing plate.

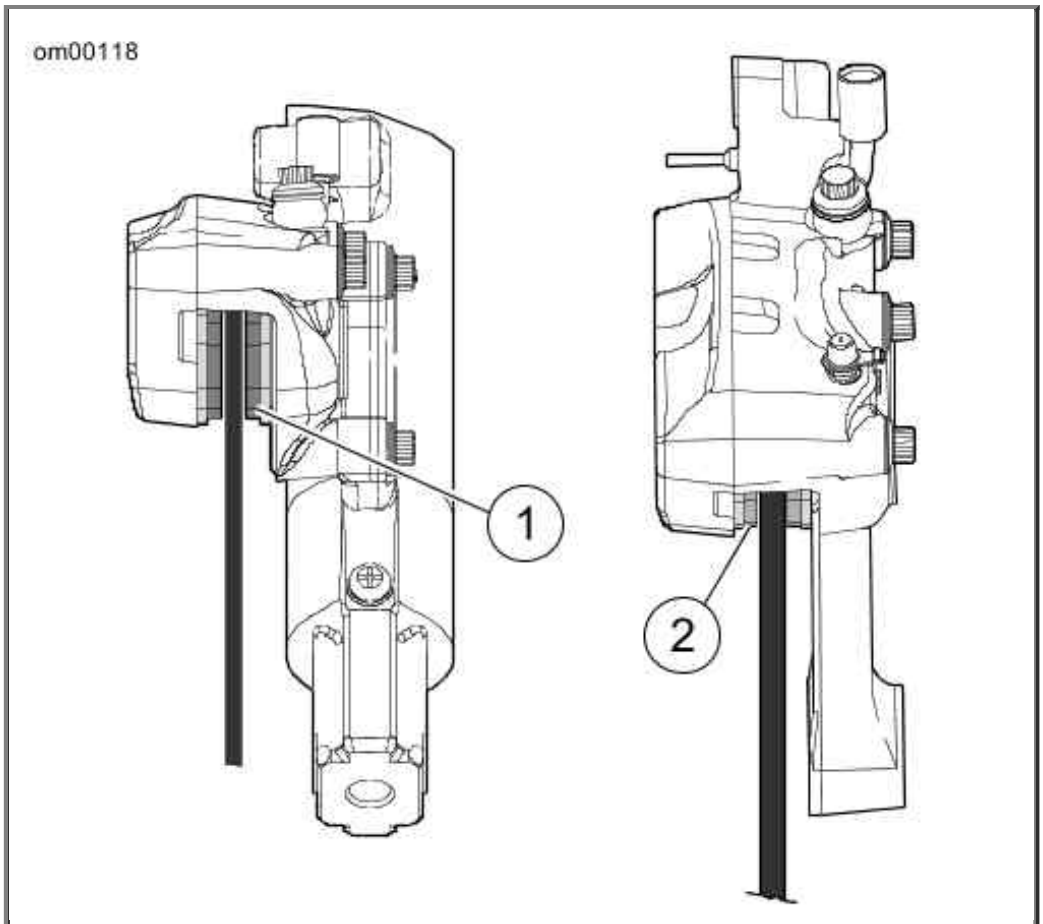

1. Front brake bottom view
2. Rear brake top view

Brake Friction Material

Brakes: Springer Models

Springer models have a single piston front brake. If the brake pad friction material is 0.06 in. 1.59 mm thick or less (the thickness of a nickel), the pads must be replaced IMMEDIATELY.

Tires

See Specifications: 2009 Softail Models for tire pressures and sizes.

- Be sure to keep tires properly inflated.
- Follow tire data for correct cold tire inflation pressures.
- Check before riding when tires are cold.
- Do not over-inflate tires.

⚠WARNING

Do not inflate tire beyond maximum pressure as specified on sidewall. Over inflated tires can blow out, which could result in death or serious injury. (00027a)

⚠WARNING

Match tires, tubes, air valves and caps to the correct wheel

rim. Contact a Harley-Davidson dealer. Mismatching can result in damage to the tire bead, allow tire slippage on the rim or cause tire failure, which could result in death or serious injury. (00023a)

Check inflation pressure and inspect tread for punctures, cuts, breaks, etc., at least weekly if in daily use. Check before each trip if used occasionally.

⚠WARNING

Be sure tires are properly inflated, balanced and have adequate tread. Inspect your tires regularly and see a Harley-Davidson dealer for replacements. Riding with excessively worn, unbalanced or under-inflated tires can adversely affect stability and handling, which could result in death or serious injury. (00014a)

Same as original equipment tires should be used. Other tires may not fit correctly, could adversely affect handling, and may be hazardous to use.

⚠WARNING

Tires are a critical safety component. Contact a Harley-Davidson dealer for tire repair or replacement. Improper tire service can adversely affect stability and handling, which could result in death or serious injury. (00057a)

⚠WARNING

Replace punctured or damaged tires. In some cases, small punctures in the tread area may be repaired from within the demounted tire by a Harley-Davidson dealer. Speed should NOT exceed 50 mph (80 km/h) for the first 24 hours after repair, and the repaired tire should NEVER be used over 80 mph (130 km/h). Failure to follow this warning could result in death or serious injury. (00015a)

⚠WARNING

Striking an object, such as a curb, can cause internal tire damage. If an object is struck, remove and inspect both the inside and outside of the tire. A damaged tire can adversely affect stability and handling, which could result in death or serious injury. (00058a)

Tire Replacement

Inspection

⚠WARNING

Harley-Davidson tires are equipped with wear bars that run horizontally across the tread. When wear bars become visible and only 1/32 in. (0.8 mm) tread depth remains, replace tire immediately. Using a worn tire can adversely affect stability and handling, which could result in death or serious injury. Use only Harley-Davidson approved replacement tires. (00090b)

See Tire Sidewall Wear Bar Locator. Arrows on tire sidewalls pinpoint location of wear bar indicators.

Tread wear indicator bars will appear on tire tread surfaces when 1/32 in. 0.8 mm or less of tire tread remains. See Wear Bar Appearance. Always replace tires before the tread wear indicator bars appear.

When To Replace Tires

New tires are needed if any of the following conditions exist:

1. Tread wear indicator bars become visible on the tread surfaces.
2. Tire cords or fabric become visible through cracked sidewalls, snags or deep cuts.
3. A bump, bulge or split in the tire.
4. Puncture, cut or other damage to the tire that cannot be repaired.

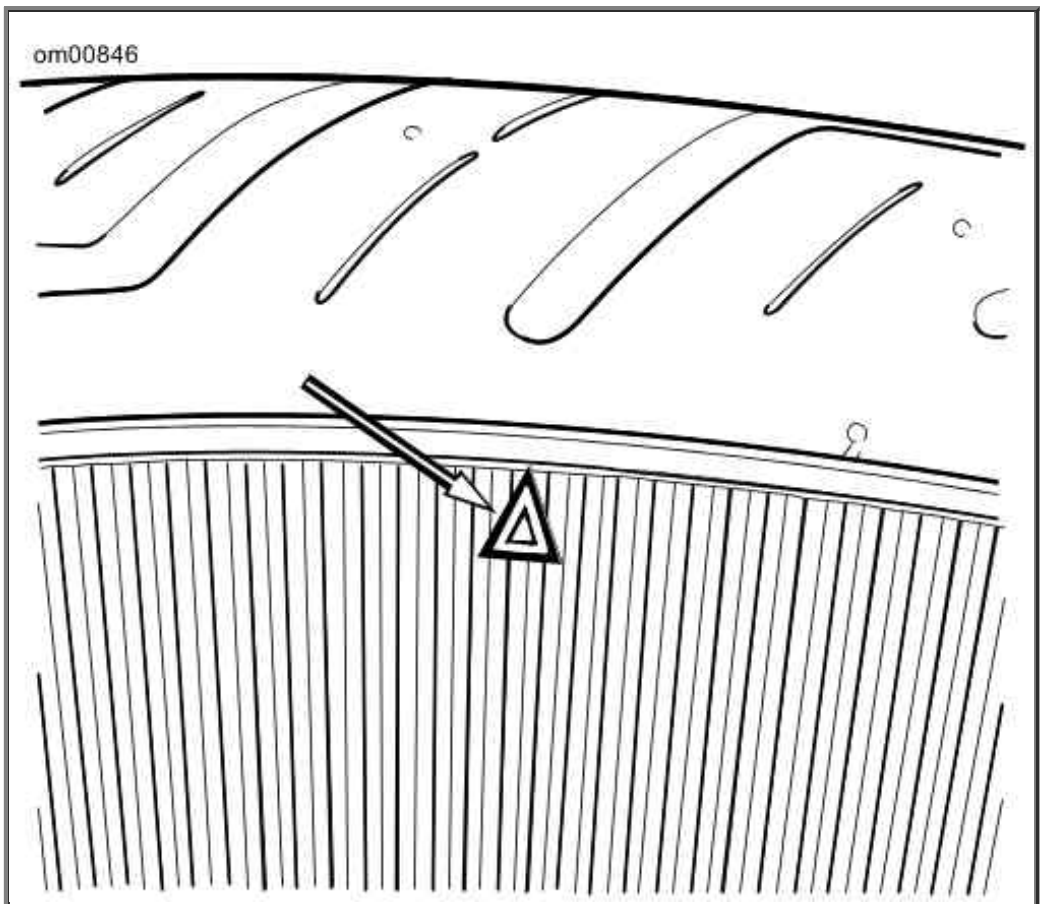

Tire Sidewall Wear Bar Locator

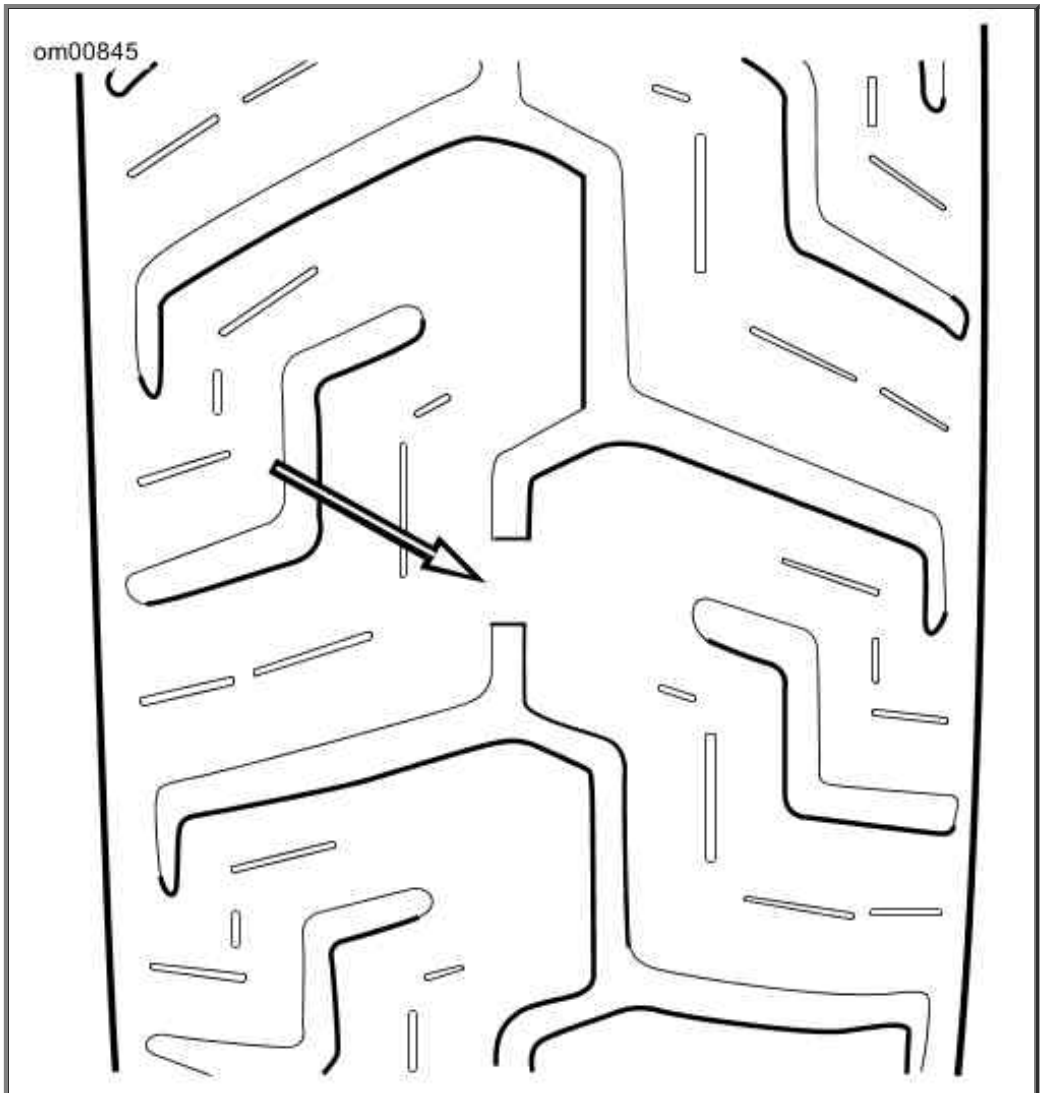

Wear Bar Appearance

Shock Absorbers

Refer to Regular Service Intervals: 2009 Softail Models. Inspect shock absorbers and rubber bushings for leaks and bushing deterioration at proper intervals.

Spark Plugs

Refer to Regular Service Intervals: 2009 Softail Models. Check the spark plugs at proper intervals.

⚠CAUTION

Do NOT pull on any electrical wires. Pulling on electrical wires may damage the internal conductor causing high resistance, which may result in minor or moderate injury. (00168a)

Disconnect spark plug cables from plugs by pulling on the molded connector caps. To reconnect, simply snap-on spark plug cables to tops of spark plugs.

Refer to Ignition System: 2009 Twin Cam Models before servicing spark plugs.

1. Check spark plug type. Only use those spark plugs specified for your model motorcycle.
2. Check spark plug gap against table specifications.
3. Always tighten to the proper torque. Spark plugs must be tightened to the torque specified for proper heat transfer.

NOTE:

If a torque wrench is not available, tighten plugs finger tight and then tighten an additional one quarter turn with a spark plug wrench.

Ignition

The engine in your motorcycle has been designed specifically to achieve optimum fuel economy within exhaust emission controls. Factory programmed ignition characteristics provide maximum engine performance and driveability.

Air Cleaner

See Air Cleaner: Softail Models. The engine air cleaner is a paper/wire mesh air filter element.

Refer to Regular Service Intervals: 2009 Softail Models. Remove air cleaner cover and inspect filter element at proper intervals. Under dusty conditions, inspect more often.

The paper/wire mesh air filter element should be washed in luke warm water with a mild detergent.

Install baseplate gasket, air filter element, and bracket if removed. Tighten screws to 40-60 in-lbs (4.5-6.8 Nm).

When installing air cleaner cover, apply a drop of LOCTITE THREADLOCKER 243 (blue) to the threads of the cover screw and tighten to 36-60 in-lbs (4.1-6.8 Nm).

⚠WARNING

Compressed air can pierce the skin and flying debris from compressed air could cause serious eye injury. Wear safety glasses when working with compressed air. Never use your hand to check for air leaks or to determine air flow rates. (00061a)

- Allow filter to either air dry or blow it dry, from the inside, with low pressure air.
- Do not use an air cleaner filter oil on the Harley-Davidson paper/wire mesh air filter element.

CAUTION

Install air filter before running engine. Failure to do so can draw debris into the engine and could result in engine damage. (00207a)

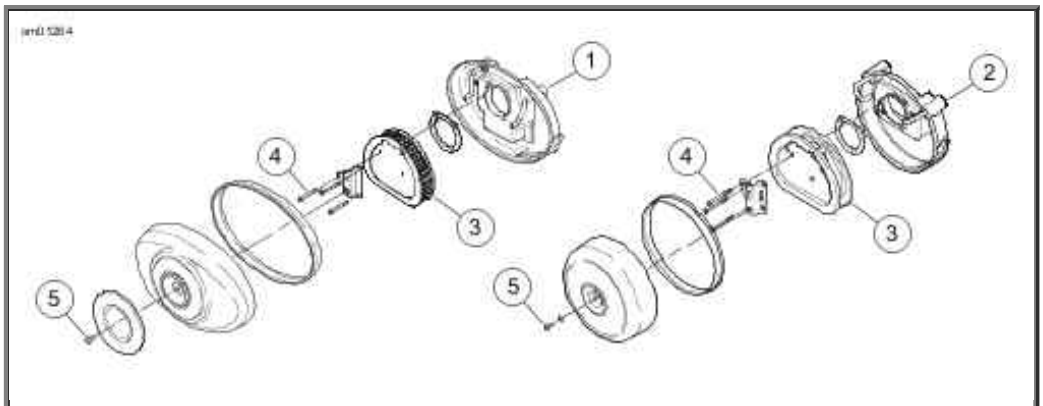

1. Air cleaner assembly (Softail models)
2. Air cleaner assembly (FLSTSB, domestic)
3. Air filter element
4. Bracket screws (3)
5. Cover screw

Air Cleaner: Softail Models

Headlamp

See Headlamp Bulbs: Softail Models. The headlamp assembly uses replaceable quartz halogen bulb(s).

Refer to Bulb Chart: 2009 Softail Models for bulbs. See a Harley-Davidson dealer or service manual for bulb replacement.

CAUTION

When replacement is required, use only the specified sealed beam unit or bulb, available from a Harley-Davidson dealer. An improper wattage sealed beam or bulb, can cause charging system problems. (00209a)

CAUTION

Never touch the quartz bulb. Fingerprints will etch the glass and decrease bulb life. Grab the bulb with paper or a clean, dry cloth. Failure to do so could result in bulb damage. (00210a)

⚠WARNING

Handle bulb carefully and wear eye protection. Bulb contains gas under pressure, which, if not handled carefully, could cause serious eye injury. (00062b)

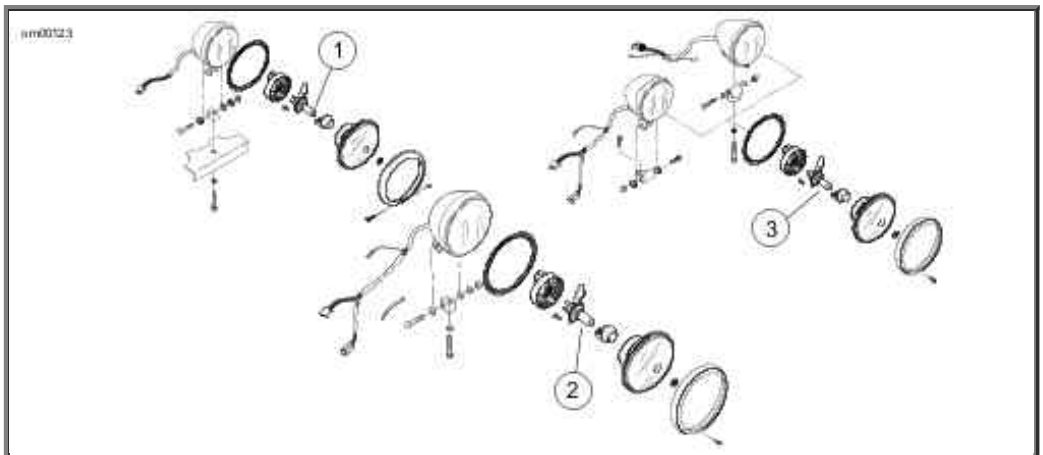

1. Bulb for FXSTB, FXSTC, FXST
2. Bulb for FLST, FLSTC, FLSTF, FLSTN
3. Bulb for FXCW, FXCWC, FLSTSB

Headlamp Bulbs: Softail Models

Headlamp Alignment

WARNING

The automatic-on headlamp feature provides increased visibility of the rider to other motorists. Be sure headlamp is on at all times. Poor visibility of rider to other motorists can result in death or serious injury. (00030b)

NOTE:

Vehicles with multiple beam headlamps that are individually aimed should be adjusted so both lamps converge into one pattern.

1. Verify that front and rear tire inflation pressures are correct and that suspension is adjusted to the weight of the principal rider. See Specifications.
2. Fill fuel tank or add ballast to equal the weight of the fuel needed.

   NOTE:

   See Headlamp Alignment. To aid in properly placing the motorcycle, a perpendicular line (1) can be drawn on the floor. For best results, choose an area with minimum light.

3. See Headlamp Alignment. Draw a vertical line (2) on the wall.
4. Position motorcycle so that front axle is 25 feet 7.6 meters from wall.

   NOTE:

   As the weight of the rider will compress the suspension slightly, have a person whose weight is approximately the same as that of the principal rider sit on the motorcycle.

5. With the vehicle laden and upright, point the front wheel straight forward at wall and measure the distance (4) from the floor to the center of the HIGH BEAM bulb.
6. Draw a horizontal line (5) through the vertical line on the wall that is 2.1 in. 53.3 mm lower than the measured bulb centerline.

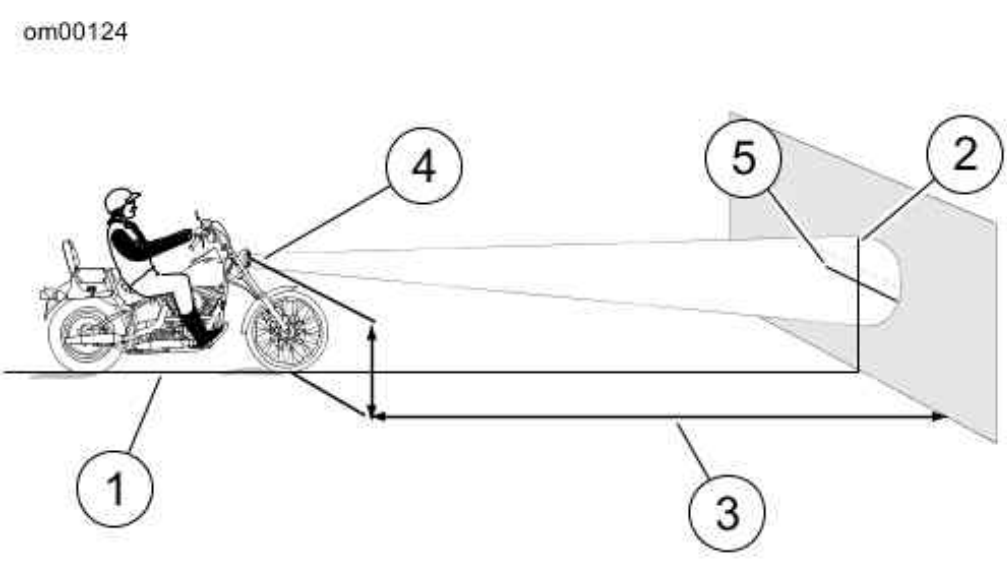

1. Perpendicular line
2. Vertical line
3. 25 feet (7.6 meters)
4. High beam bulb centerline
5. Horizontal line 2.1 in. (53.3 mm) lower than bulb centerline

Headlamp Alignment

NOTE:

As the weight of the rider will compress the suspension slightly, have a person whose weight is approximately the same as that of the principal rider sit on the motorcycle.

7. See Headlamp Alignment. Verify headlamp alignment. Turn the ignition switch to IGNITION and set the headlamp switch to HIGH beam.
    a. The center of the hot spot (brightest area of light beam) should be centered where the two lines intersect.
    b. Adjust headlamp alignment if necessary.

Headlamp Adjustment

1. See Headlamp Adjustment: FLSTSB (FLSTSB) and Headlamp Adjustment: Softail Models Except FLSTSB (typical) (other models). Loosen horizontal adjustment fastener (2). Tilt headlamp left or right to direct light beam straight ahead.
2. Tighten horizontal adjustment fastener (2) to 30-35 ft-lbs (40.7-47.5 Nm).
3. Loosen vertical adjustment fastener (1). Tilt headlamp up or down in relationship to the horizontal line from the headlamp alignment inspection.
4. Tighten vertical adjustment fastener (1) to:
    a. FXSTC, FXCW/C: 25-30 ft-lbs (33.9-40.7 Nm).
    b. FLSTSB: 25-35 ft-lbs (33.9-47.5 Nm).

c. All other models: 35-45 ft-lbs (47.5-61.0 Nm).

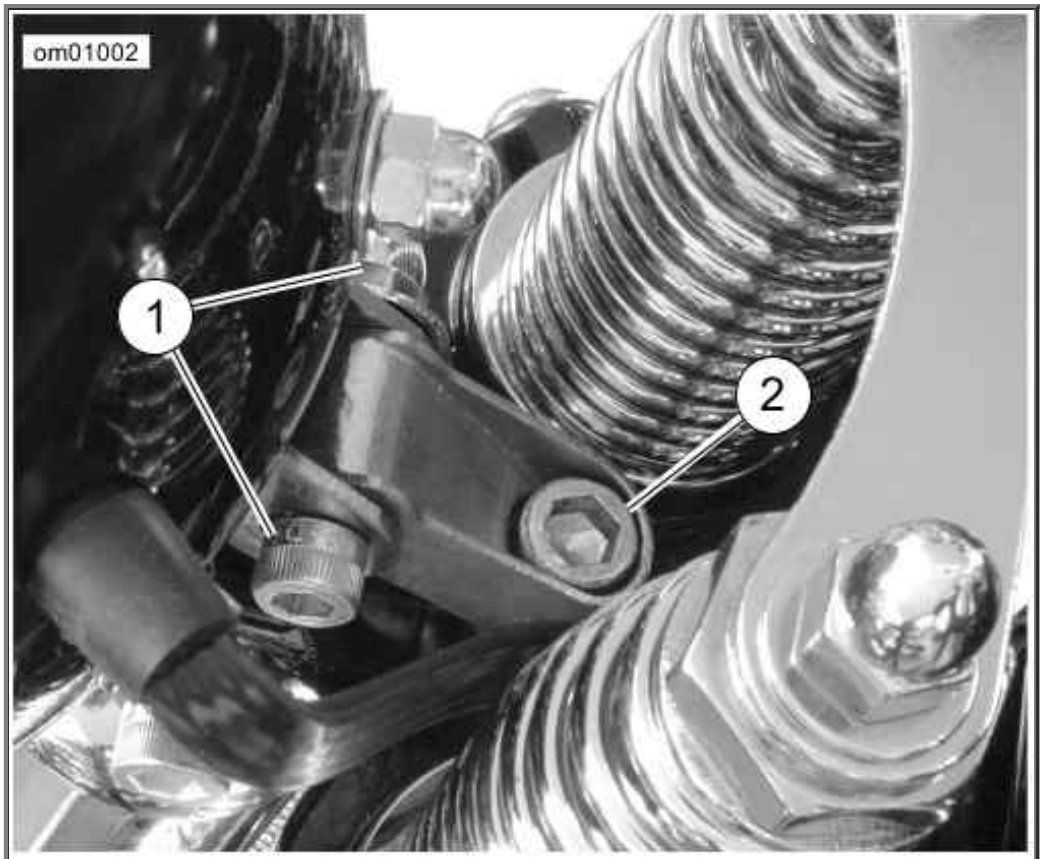

1. Vertical adjusting fastener (with acorn nut)
2. Horizontal adjusting fastener

Headlamp Adjustment: FLSTSB

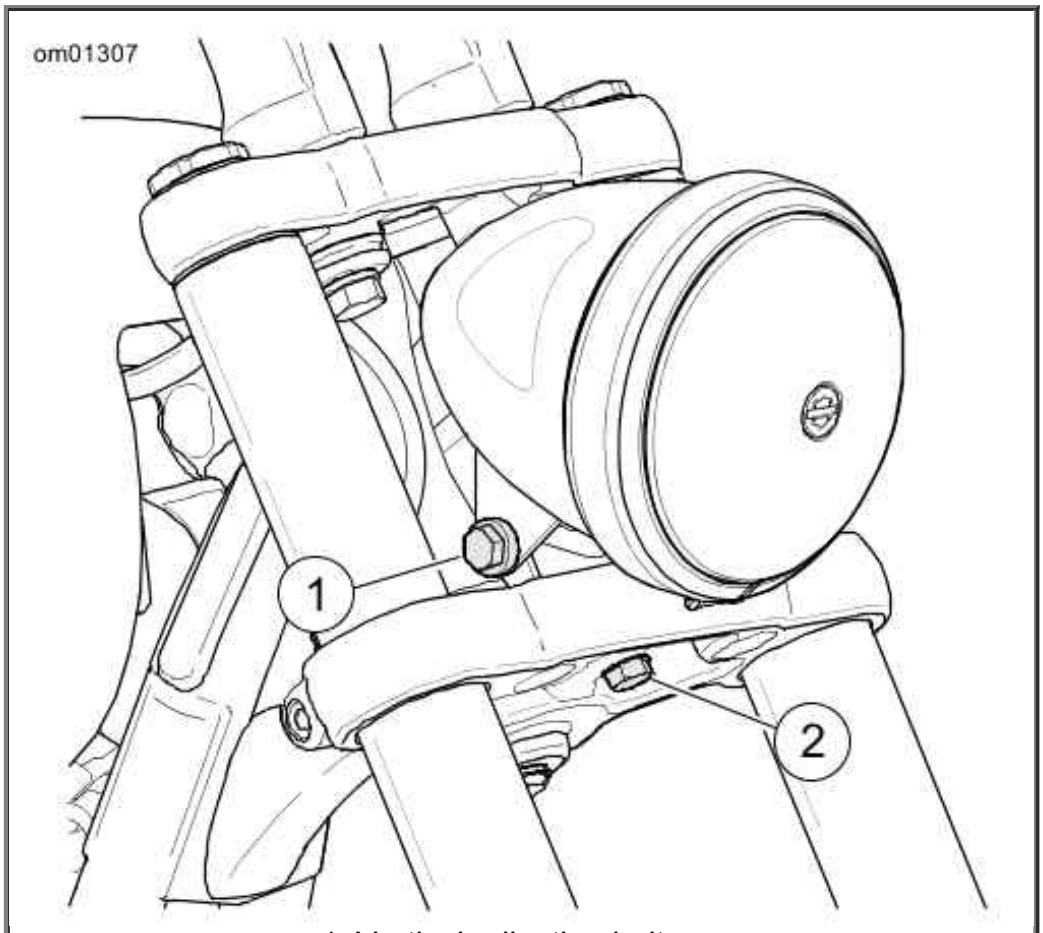

1. Vertical adjusting bolt
2. Horizontal adjusting bolt

Headlamp Adjustment: Softail Models

Except FLSTSB (typical)

LED Rear Turn Signal/Tail Lamps: FXCW/FXCWC Models

On FXCW and FXCWC models, the rear turn signal/tail lamps are LED assemblies with no replaceable bulbs. Caps on rear turn signals are not removable. See dealer or service manual for assembly replacement.

Turn Signal Bulb Replacement: Bullet Style

1. See Lens Cap Notch. Insert a coin or the blade of a small screwdriver into the notch at the bottom of the lens cap. Carefully twist until the lens cap pops out of the lamp housing.
2. Push in bulb and rotate counterclockwise. Pull bulb from socket.
3. Inspect condition of electrical contacts in socket. If necessary, clean with a small wire brush and electrical contact cleaner.
4. Coat base of **new** bulb with ELECTRICAL CONTACT GREASE 99861-90 .
5. Orient index pins on **new** bulb with pin guides inside bulb socket. Push bulb in and turn clockwise to lock in place.
6. Snap lens cap back into the lamp holder. Rotate lens to position notch at bottom of lamp.

⚠WARNING

Be sure that all lights and switches operate properly before operating motorcycle. Low visibility of rider can result in death or serious injury. (00316a)

7. Turn ignition on and test for proper turn signal operation.

NOTE:

If the turn signal or running lamp will not light after replacing a bulb, check the wiring, the ground at the socket and/or the switch.

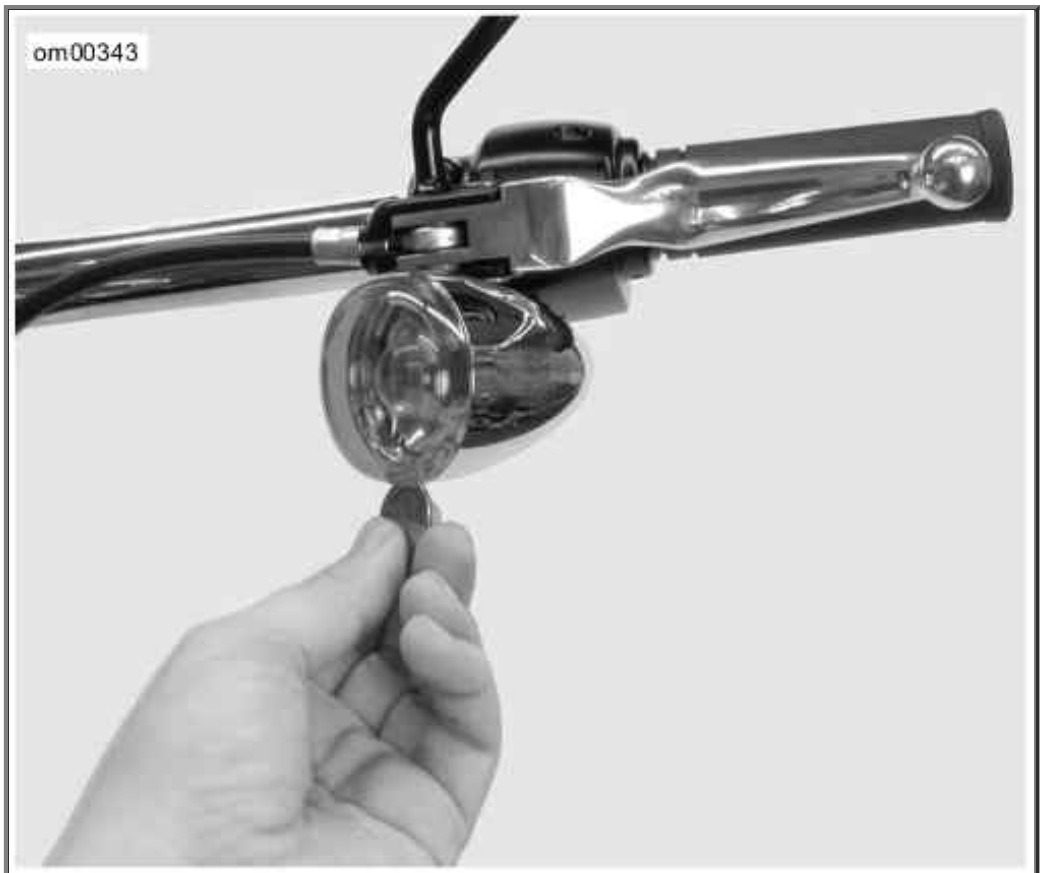

Lens Cap Notch

Turn Signal Bulb Replacement: Flat Lens Style

1. See Turn Signal Lamp Assembly: Flat Lens Style. Remove two screws to release lens from lamp housing.
2. Push in bulb and rotate counterclockwise to remove bulb from socket.
3. Inspect condition of electrical contacts in socket. If necessary, clean with a small wire brush and electrical contact cleaner.
4. Liberally apply dielectric grease to contacts in socket and at bottom of **new** bulb.
5. Orient index pins on **new** bulb with pin guides inside bulb socket.
6. Push bulb in and turn clockwise to lock in place.
7. Seat lens in lamp and install two screws.

⚠WARNING

Be sure that all lights and switches operate properly before operating motorcycle. Low visibility of rider can result in death or serious injury. (00316a)

8. Turn ignition on and test for proper turn signal operation.

NOTE:

If the turn signal or running lamp will not light after replacing a bulb, check the wiring, the ground at the socket and/or the switch.

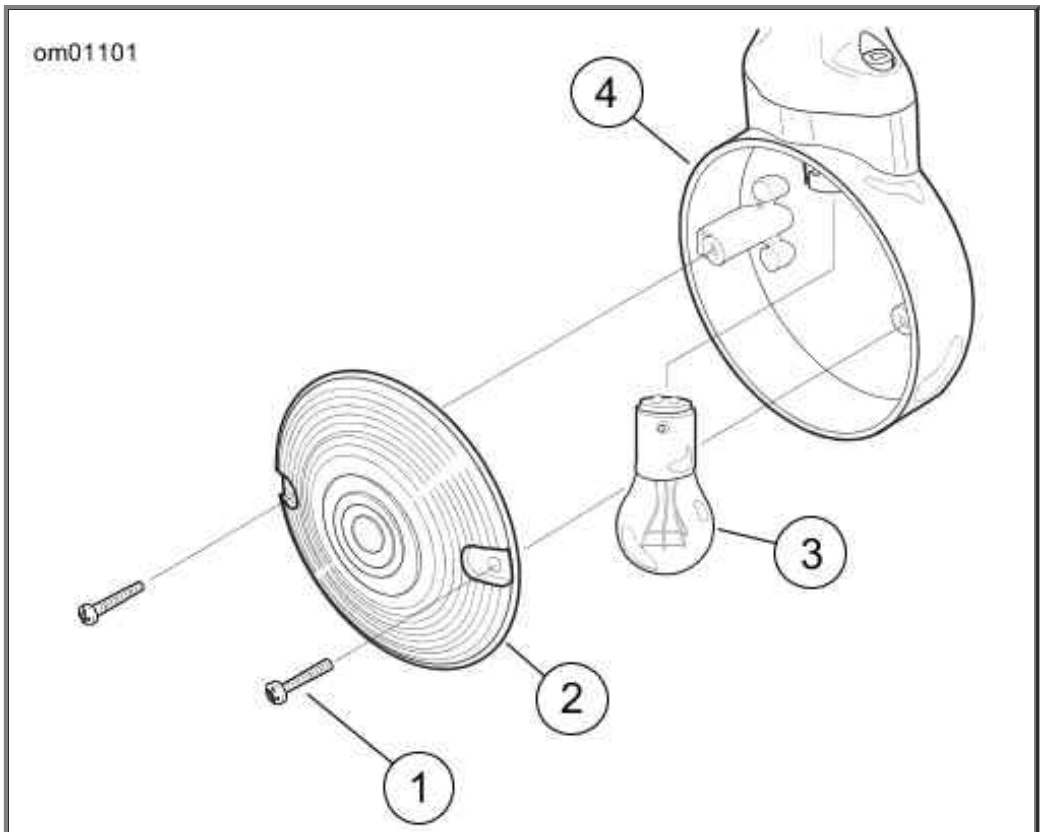

1. Screws (2)
2. Lens
3. Bulb
4. Lamp housing

Turn Signal Lamp Assembly: Flat Lens Style

Tail Lamp Bulb Replacement: Standard Style

1. See Tail Lamp Assembly: Standard Style. Make certain ignition switch is turned off.
2. Remove two screws and lens from base.

   NOTE:

   For ease of bulb removal, the 4-Pin multilock connector can be removed from circuit board.

3. Remove (pull) bulb assembly from lens. Remove bulb from socket.

4. Coat base of **new** bulb with ELECTRICAL CONTACT GREASE (Part No. 99861-90). Install **new** bulb in socket.

5. Install (push) bulb assembly to lens.

6. If removed connect 4-Pin multilock connector to circuit board.

7. Install lens to base with two screws. Tighten screws to 20-24 in-lbs (2.3-2.7 Nm).

⚠WARNING

Be sure that all lights and switches operate properly before operating motorcycle. Low visibility of rider can result in death or serious injury. (00316a)

8. Turn ignition on and test for proper tail lamp operation.

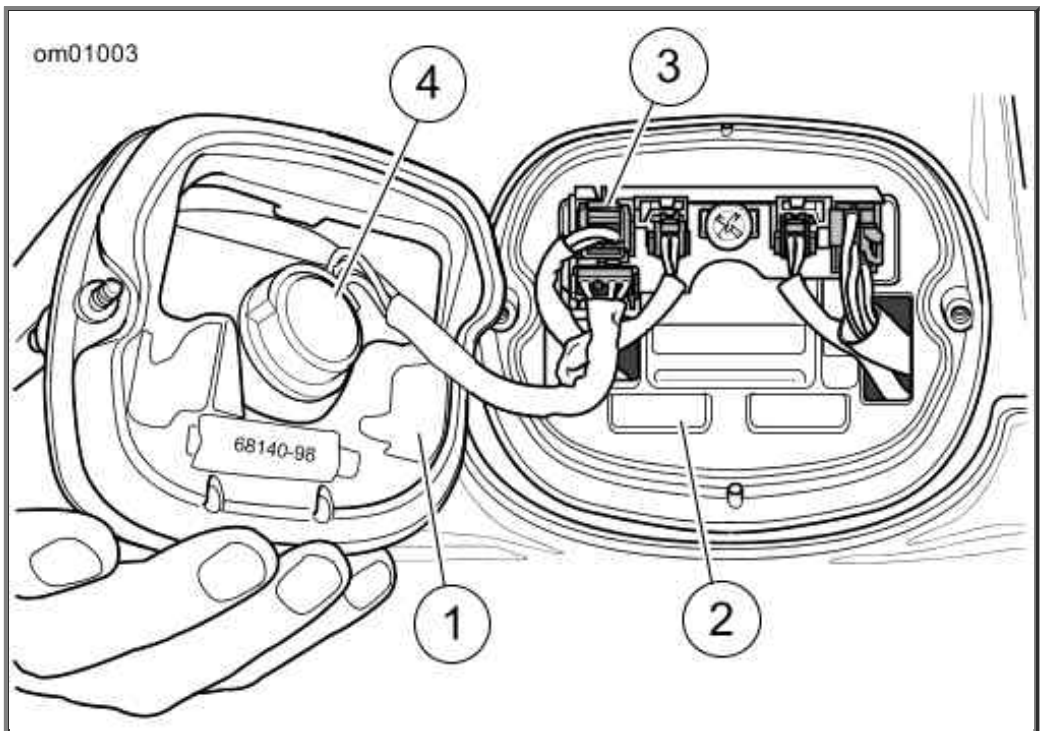

1. Lens
2. Base
3. 4-pin multilock connector
4. Bulb assembly

Tail Lamp Assembly: Standard Style

Tail Lamp Bulb Replacement: Tombstone Style

1. See Tail Lamp Assembly: Tombstone Style. Make certain ignition switch is turned off.

2. Remove three screws to detach the tail lamp assembly from base.

3. Push bulb into socket and rotate 1/4 turn counterclockwise. Pull bulb from socket.

4. Inspect condition of electrical contacts in socket. If necessary, clean with a small wire brush and electrical contact cleaner.

5. Coat base of **new** bulb with ELECTRICAL CONTACT GREASE (Part No. 99861-90).
6. Orient index pins on **new** bulb with pin guides inside bulb socket. Push bulb in and turn clockwise to lock in place.
7. Install tail lamp assembly to base with three screws. Tighten screws to 20-24 in-lbs (2.3-2.7 Nm).

⚠WARNING

Be sure that all lights and switches operate properly before operating motorcycle. Low visibility of rider can result in death or serious injury. (00316a)

8. Turn ignition on and test for proper tail lamp operation.

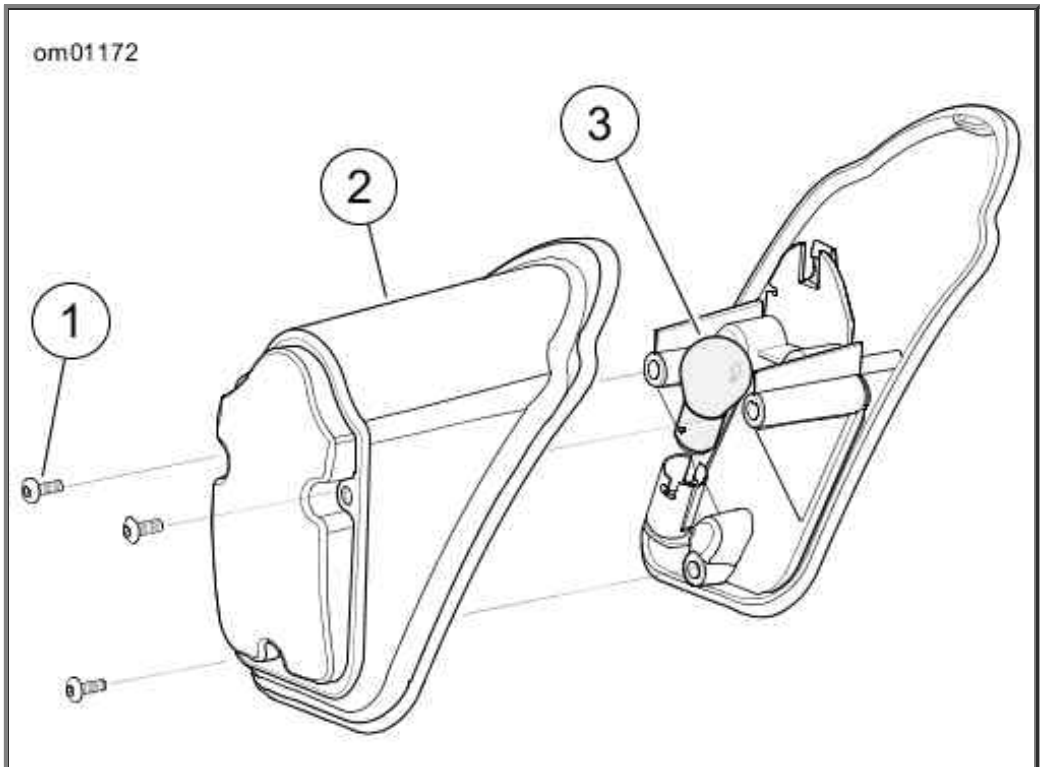

1. Screws (3)
2. Tail lamp assembly
3. Bulb

Tail Lamp Assembly: Tombstone Style

Alternator/Voltage Regulator

Charging Rate

The alternator output is controlled and changed to direct current by the voltage regulator.

- The voltage regulator increases charging rate when battery is low or lamps are lit.
- The voltage regulator decreases charging rate when battery charge is up.

CAUTION

It is possible to overload your motorcycle's charging system by adding too many electrical accessories. If your combined electrical accessories operating at any one time consume more electrical current than your vehicle's charging system can produce, the electrical consumption can discharge the battery and cause vehicle electrical system damage. See a Harley-Davidson dealer for advice about the amount of current consumed by additional electrical accessories, or for necessary wiring changes. (00211b)

NOTES:

- *This unit requires no interval attention. If any electrical system trouble is experienced that might be traceable to the alternator or voltage regulator, the motorcycle should be taken to a Harley-Davidson dealer who has the necessary electrical testing equipment to give the required attention.*
- *For model specific information regarding the voltage regulator, refer to the appropriate Service Manual or see a Harley-Davidson dealer.*

Battery: General

Type

Your motorcycle uses a permanently sealed, maintenance-free, lead/calcium and sulfuric acid battery. All batteries are shipped precharged and ready to be put into service. Do not attempt to open the battery for any reason.

Antidotes for Battery Acid

CONTACT	TREATMENT
External	Flush with water.
Internal	Drink large quantities of milk or water, followed by milk of magnesia, vegetable oil or beaten eggs. Get immediate medical attention.
Eyes	Flush with water. Get immediate medical attention.

⚠WARNING

Batteries contain sulfuric acid, which could cause severe burns to eyes and skin. Wear a protective face shield, rubberized gloves and protective clothing when working with batteries. KEEP BATTERIES AWAY FROM CHILDREN. (00063a)

⚠WARNING

Explosive hydrogen gas, which escapes during charging, could cause death or serious injury. Charge battery in a well-ventilated area. Keep open flames, electrical sparks and smoking materials away from battery at all times. KEEP BATTERIES AWAY FROM CHILDREN. (00065a)

⚠WARNING

Batteries, battery posts, terminals and related accessories contain lead and lead compounds, and other chemicals known to the State of California to cause cancer, and birth defects or other reproductive harm. Wash hands after handling. (00019e)

⚠WARNING

Never remove warning label attached to top of battery. Failure to read and understand all precautions contained in warning, could result in death or serious injury. (00064a)

1. Contents are corrosive
2. Wear safety glasses
3. Contents are explosive
4. Keep flames away
5. Read instructions
6. Keep away from children

Battery Warning Label

Battery Warning Label

Voltmeter Test

Refer to Voltmeter Test. The voltmeter test provides a general indicator of battery condition. Check the voltage of the battery to verify that it is in a 100 percent fully charged condition. If the open circuit (disconnected) voltage reading is below 12.6V, charge the battery and then re-check the voltage after the battery has set for one to two hours.

Voltmeter Test

READING IN VOLTS	PERCENT OF CHARGE
12.7	100
12.6	75
12.3	50
12.0	25
11.8	0

Cleaning and Inspection

Battery top must be clean and dry. Dirt and electrolyte on top of the battery can cause battery to self-discharge.

1. Clean battery top.

2. Clean cable connectors and battery terminals using a wire brush or fine grit sandpaper to remove any oxidation.

3. Inspect and clean the battery screws, clamps and cables. Check for breakage, loose connections and corrosion.

4. Check the battery posts for melting or damage caused by overtightening.

5. Inspect the battery for discoloration, a raised top or a warped or distorted case. This might indicate that the battery has been frozen, overheated or overcharged.

6. Inspect the battery case for cracks or leaks.

Charging

Never charge a battery without first reviewing the instructions for the charger being used. In addition to the manufacturer's instructions, follow these general safety precautions.

Charge the battery if any of the following conditions exist:

- Vehicle lamps appear dim.
- Electric starter sounds weak.
- Battery has not been used for an extended period of time.

⚠WARNING

Explosive hydrogen gas, which escapes during charging, could cause death or serious injury. Charge battery in a well-ventilated area. Keep open flames, electrical sparks and smoking materials away from battery at all times. KEEP BATTERIES AWAY FROM CHILDREN. (00065a)

⚠WARNING

Batteries contain sulfuric acid, which could cause severe burns to eyes and skin. Wear a protective face shield, rubberized gloves and protective clothing when working with batteries. KEEP BATTERIES AWAY FROM CHILDREN. (00063a)

1. Perform a voltmeter test to determine the state of charge. If battery needs to be charged, proceed to the next step.

2. Place the battery on a level surface.

⚠WARNING

Unplug or turn OFF battery charger before connecting charger cables to battery. Connecting cables with charger ON can cause a spark and battery explosion, which could result in death or serious injury. (00066a)

⚠WARNING

Connect positive (+) battery cable first. If positive (+) cable should contact ground with negative (-) cable connected, the resulting sparks can cause a battery explosion, which could result in death or serious injury. (00068a)

⚠WARNING

Disconnect negative (-) battery cable first. If positive (+) cable should contact ground with negative (-) cable connected, the resulting sparks can cause a battery explosion, which could result in death or serious injury. (00049a)

CAUTION

Do not reverse the charger connections described in the following steps or the charging system of the motorcycle could be damaged. (00214a)

NOTES:

- *The figures listed in the Amp-hour table assume that the battery is charging at room temperature. If warmer than room temperature, use a slightly shorter charging time. If colder, use a slightly longer charging time.*
- *The use of constant current chargers to charge sealed maintenance free batteries is not recommended. Any overcharge will cause dry-out and premature battery failure. If a constant current charger is the only type available, do not exceed the charge times listed in 19 Amp Hour Battery Charging Rates/Times and do not continue charging the battery if it gets hot. When charging, never exceed 15 volts.*

3. Connect the red battery charger lead to positive (+) terminal of the battery.

4. Connect the black battery charger lead to negative (-) terminal of the battery.

   NOTE:

   If the battery is still in the vehicle, connect the negative lead to the chassis ground. Make sure that the ignition and all electrical accessories are turned off.

5. Step away from the battery and turn on the charger.

⚠WARNING

Unplug or turn OFF battery charger before disconnecting charger cables from battery. Disconnecting clamps with charger ON can cause a spark and battery explosion, which could result in death or serious injury. (00067a)

6. After the battery is fully charged, turn OFF the charger and disconnect the black battery charger lead to the negative (-) terminal of the battery.

7. Disconnect the red battery charger lead to the positive (+) terminal of the battery.

8. Mark the charging date on the battery.

19 Amp Hour Battery Charging Rates/Times

READING (VOLTS)	PERCENT OF CHARGE	3 AMP CHARGER	6 AMP CHARGER	10 AMP CHARGER	20 AMP CHARGER
12.7	100	-	-	-	-
12.6	75	1 hour 50 minutes	55 minutes	30 minutes	15 minutes
12.3	50	3 hours 40 minutes	1 hour 50 minutes	1 hour 5 minutes	30 minutes
12.0	25	5 hours 15 minutes	2 hours 40 minutes	1 hours 35 minutes	45 minutes
11.8	0	7 hours	3 hours 30 minutes	2 hours 5 minutes	1 hour 5 minutes

Storage

CAUTION

Turn engine over a few times to be sure there is no oil in the crankcase and that all oil has been pumped back into the oil tank. Stop engine and re-check oil level. Failure to do so can result in engine damage. (00071a)

CAUTION

Do not allow battery to completely discharge. The electrolyte in a discharged battery will freeze. The more discharged a battery is, the more easily it can freeze and crack the battery case. (00218a)

If the motorcycle will not be operated for several months, such as during the winter season, remove the battery from the motorcycle and fully charge.

If the motorcycle is to be stored with the battery installed, it will be necessary to connect a battery tender to maintain charge. See an authorized dealer for more information.

Self-discharge is a normal condition and occurs continuously. The rate of self-discharge depends on the ambient temperature and the battery's state of charge.

- Batteries discharge at a faster rate at higher ambient temperatures.
- To reduce the self-discharge rate, store battery in a cool (not freezing), dry place.
- Charge the battery every month if stored at temperatures below 60° F 16° C .

- Charge the battery more frequently if stored in a warm area above 60° F 16° C .

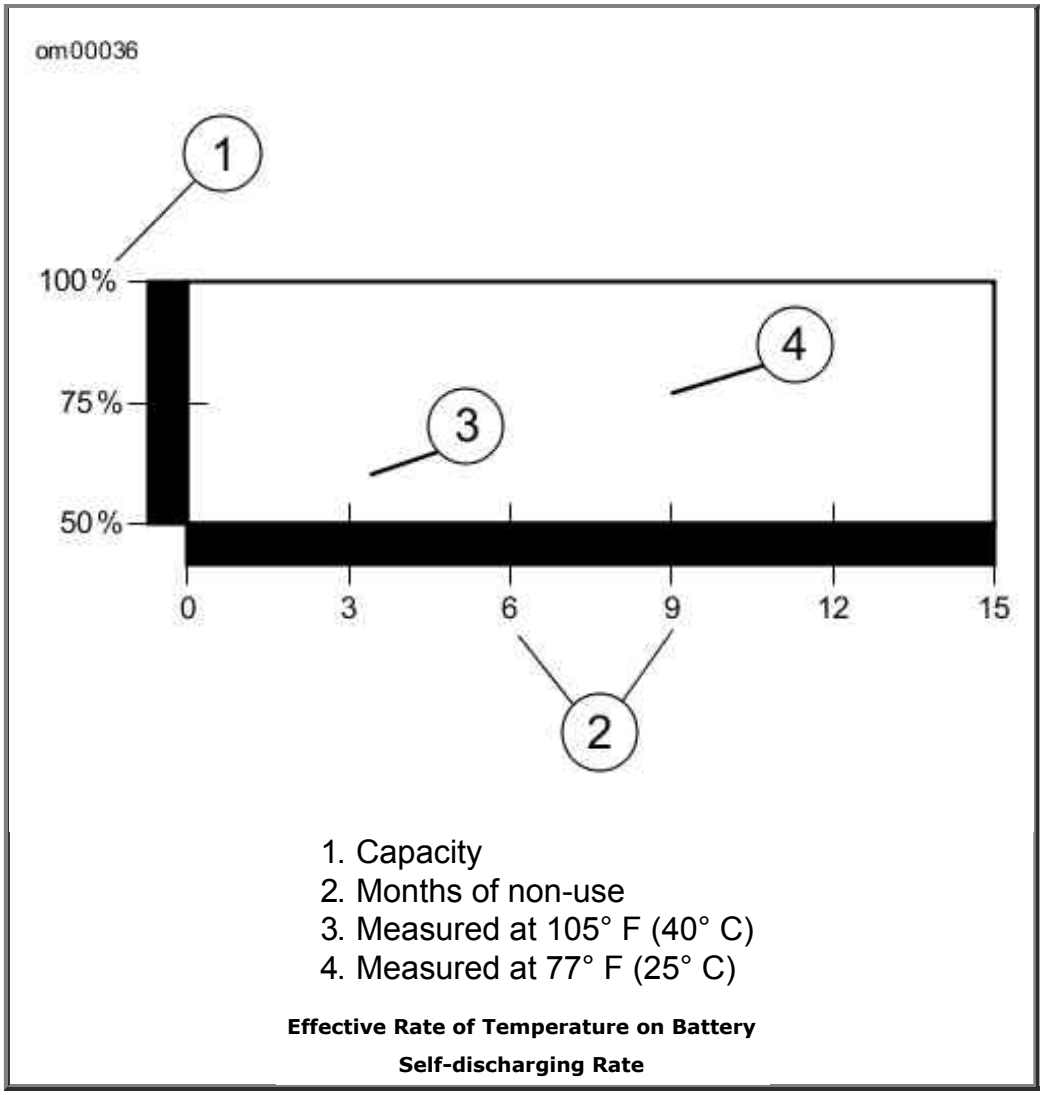

Battery: Softail Models

Disconnection and Removal

⚠WARNING

Disconnect negative (-) battery cable first. If positive (+) cable should contact ground with negative (-) cable connected, the resulting sparks can cause a battery explosion, which could result in death or serious injury. (00049a)

1. On FXCWC model, lift the rear of the seat and swing seat toward fuel tank. For all other models, remove the seat. See Seats: Softail Models and follow procedure for the appropriate model.

2. See Battery Cover (Removal Slot Shown): FXCWC Models. On FXCWC model, lift battery cover from frame and remove.

3. See Frame Fairing: FLSTSB Models. On FLSTSB model, remove frame fairing.

a. Remove thumbscrew from frame fairing.

b. Lift rear of frame fairing. Raise fairing over the seat spring mounting pins.

c. Pull fairing to the rear and remove.

4. See Battery: Softail Models. Unthread bolt and remove battery negative cable (black) from battery negative (-) terminal.

5. Unthread bolt and remove battery positive cable (red) from battery positive (+) terminal.

6. Lift battery from battery box within oil tank cavity.

Installation and Connection

CAUTION

Do not over-tighten bolts on battery terminals. Use recommended torque values. Over-tightening battery terminal bolts could result in damage to battery terminals. (00216a)

⚠WARNING

Connect positive (+) battery cable first. If positive (+) cable should contact ground with negative (-) cable connected, the resulting sparks can cause a battery explosion, which could result in death or serious injury. (00068a)

⚠WARNING

Do not allow positive (+) battery cable to contact ground with negative (-) cable connected. Resulting sparks can cause a battery explosion, which could result in death or serious injury. (00069a)

1. Place the fully charged battery into the battery box located within oil tank cavity, terminal side forward.

2. Attach battery positive cable (+) (red) to battery positive (+) terminal.

3. Tighten fastener to 60-70 in-lbs (6.8-7.9 Nm).

4. Attach battery negative cable (black) to battery negative (-) terminal.

5. Tighten fastener to 60-70 in-lbs (6.8-7.9 Nm).

CAUTION

Keep battery clean and lightly coat terminals with petroleum jelly to prevent corrosion. Failure to do so could

result in damage to battery terminals. (00217a)

6. Apply a light coat of petroleum jelly or corrosion retardant material to both battery terminals.

7. See Battery Cover (Removal Slot Shown): FXCWC Models. On FXCWC model, insert battery cover tabs into frame.

8. See Frame Fairing: FLSTSB Models. On FLSTSB model, install frame fairing.

   a. Insert fairing tab in frame bracket at the base of the fuel tank.

   b. Lower fairing holes over the seat spring mounting pins.

   c. Hand tighten the thumbscrew.

⚠WARNING

After installing seat, pull upward on seat to be sure it is locked in position. While riding, a loose seat can shift causing loss of control, which could result in death or serious injury. (00070b)

9. On FXCWC model, lower seat and press down to engage locating pins. On all other models, install seat. See Seats: Softail Models and follow procedure for the appropriate model.

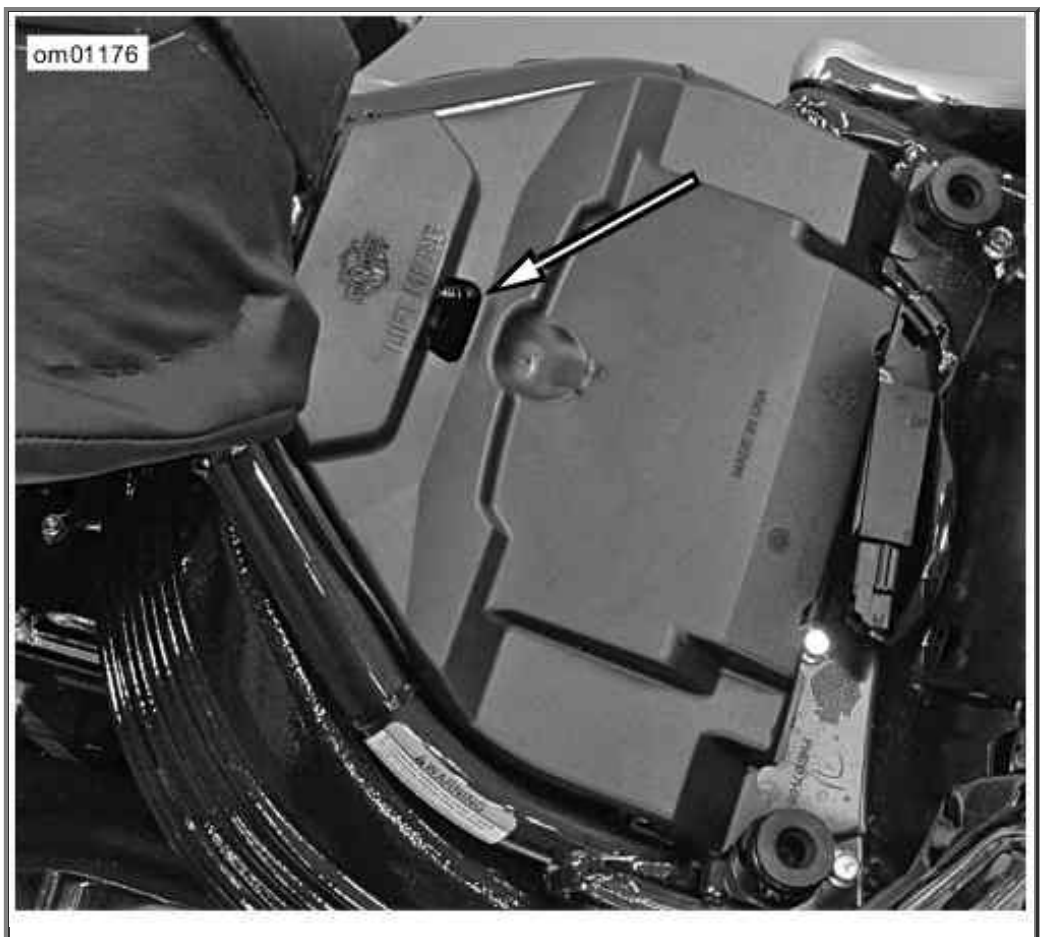

Battery Cover (Removal Slot Shown): FXCWC Models

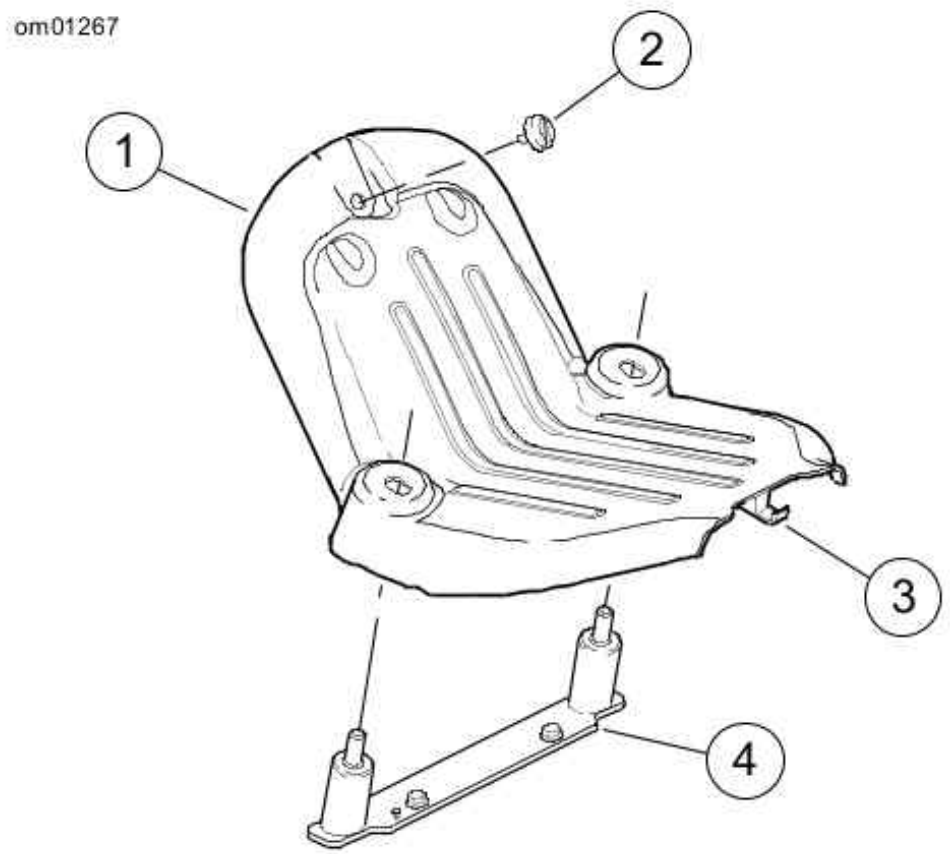

1. Frame fairing
2. Thumbscrew
3. Tab
4. Seat spring mounting bracket

Frame Fairing: FLSTSB Models

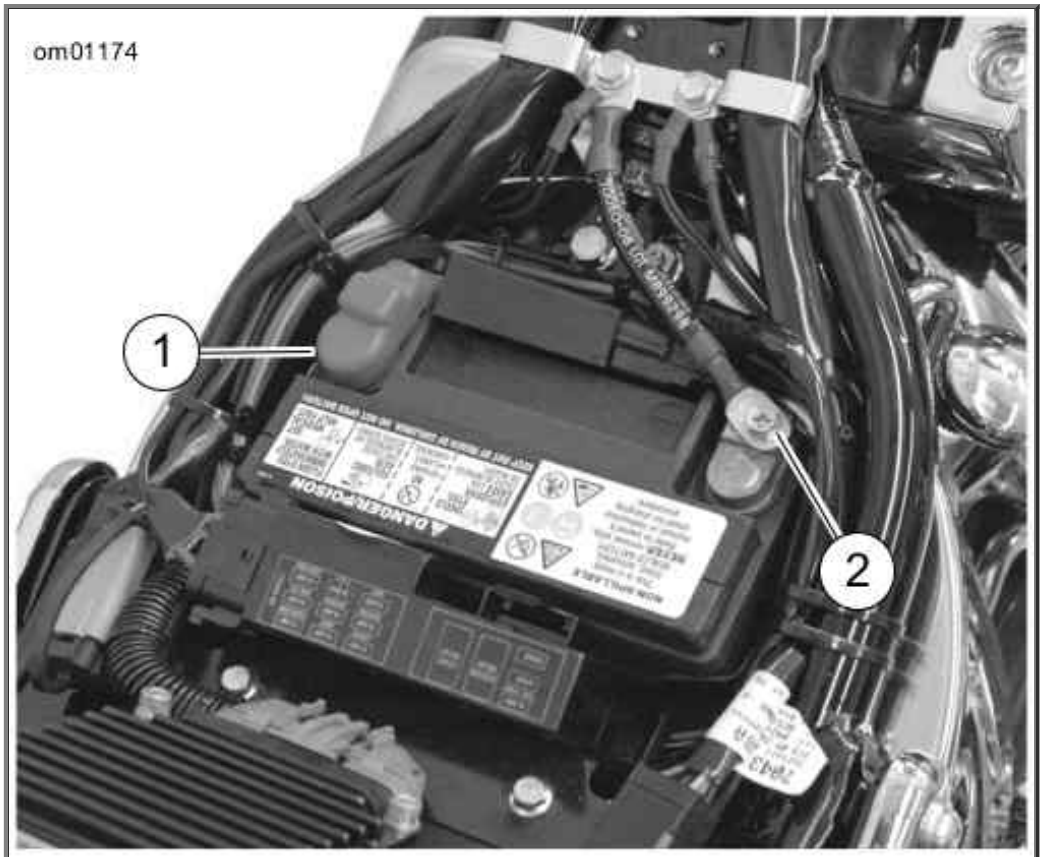

1. Positive (+) terminal
2. Negative (-) terminal

Battery: Softail Models

Jump Starting

Harley-Davidson does not recommend jump-starting a motorcycle. However, there may be circumstances when it is necessary to do so. Therefore, we suggest jump-starting be performed as follows:

⚠WARNING

Be sure jumper cables touch only appropriate battery terminals or ground. Allowing jumper cables to touch each other can result in sparks and a battery explosion, which could result in death or serious injury. (00072a)

⚠WARNING

Explosive hydrogen gas, which escapes during charging, could cause death or serious injury. Charge battery in a well-ventilated area. Keep open flames, electrical sparks and smoking materials away from battery at all times. KEEP BATTERIES AWAY FROM CHILDREN. (00065a)

CAUTION

Harley-Davidson motorcycles have a 12 Volt battery. Be sure the booster vehicle has a 12 Volt system. Failure to

do so could result in vehicle damage. (00220a)

NOTE:

This procedure presumes the BOOSTER battery is in another vehicle.

1. Turn off all unnecessary lamps and accessories.

Positive Cable

2. See Jump Start Cable Connections. Connect one end of a jumper cable to the DISCHARGED battery positive (+) terminal (1).
3. Connect the other end of the same cable to the BOOSTER battery positive (+) terminal (2).

Negative Cable

⚠WARNING

Do not connect negative (-) cable to or near the discharged battery negative (-) terminal. Doing so could cause a spark and explosion, which could result in death or serious injury. (00073a)

4. Connect one end of a jumper cable to the BOOSTER battery negative (-) terminal (3).

CAUTION

Do not connect the negative (-) cable to painted or chrome parts. Doing so could result in discoloration at the attachment point. (00221a)

5. Connect other end of the same cable (4) to a safe ground, (away from the DISCHARGED battery).
6. Start motorcycle.
7. Disconnect cables in reverse order of steps 2, 3, 4, 5. That is: steps 5, 4, 3, 2.

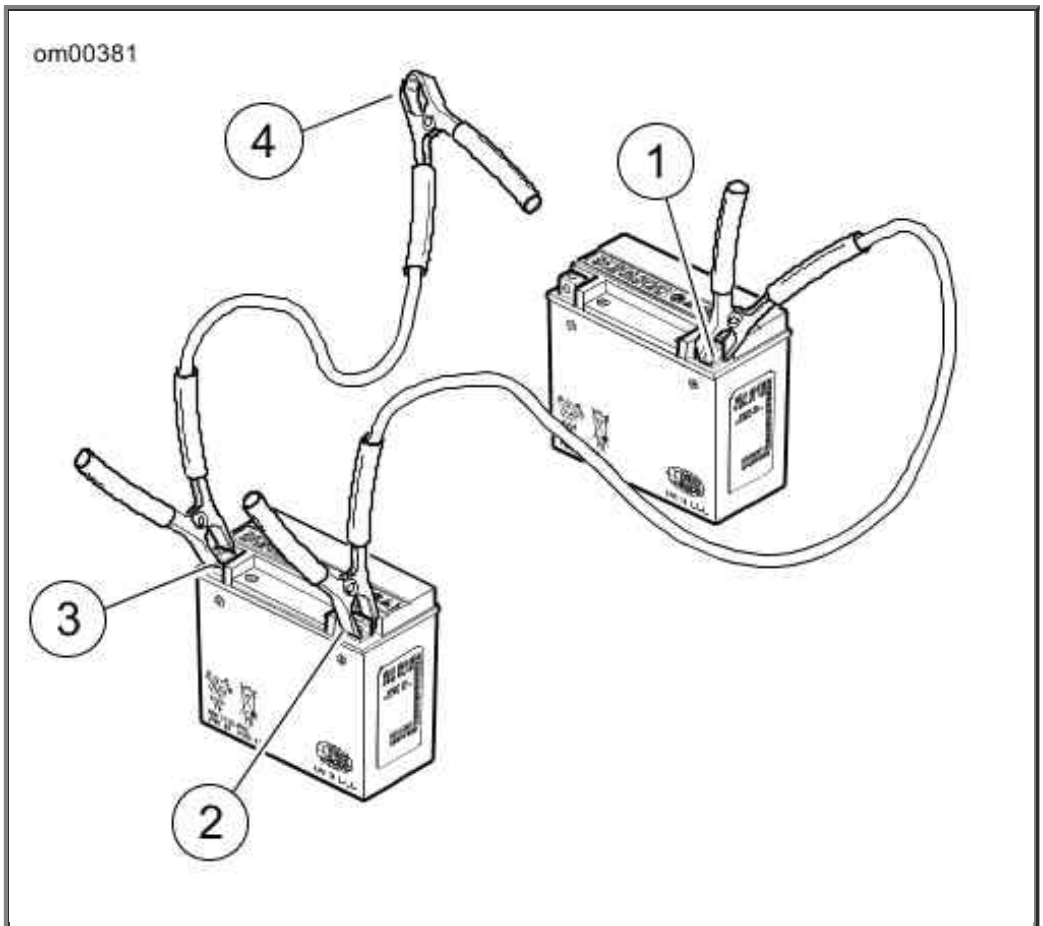

1. Discharged battery positive (+) terminal
2. Booster battery positive (+) terminal
3. Booster battery negative (-) terminal
4. Ground

Jump Start Cable Connections

Electrical Protection: Softail Models

Fuses

The fuse block is below the seat and behind the battery. The block contains eight 15-amp replaceable fuses. Additional spare fuses may be carried if the rider chooses to do so.

Fuse Removal

1. On FXCWC model, lift the rear of the seat and swing seat toward fuel tank. For all other models, remove the seat. See Seats: Softail Models and follow procedure for the appropriate model.
2. See Battery Cover (Removal Slot Shown): FXCWC Models. On FXCWC model, lift battery cover from frame and remove.
3. See Frame Fairing: FLSTSB Models. On FLSTSB model, remove frame fairing.
    a. Remove thumbscrew from frame fairing.
    b. Lift rear of frame fairing. Raise fairing over the seat mounting pins.

c. Pull fairing to the rear and remove.

⚠WARNING

To prevent accidental vehicle start-up, which could cause death or serious injury, disconnect negative (-) battery cable before proceeding. (00048a)

4. Disconnect and remove battery negative (-) cable (black) from battery negative (-) terminal.
5. See Fuse Block: Softail Models. Pull cover off fuse block.

CAUTION

Always use replacement fuses that are of the correct type and amperage rating. Use of incorrect fuses can result in damage to electrical systems. (00222a)

6. See Relay/Fuse Panel (Top View). Replace suspect fuse.

Fuse Installation

---

1. Place cover on fuse block.
2. Install battery negative cable (black) to battery negative (-) terminal.
3. Tighten fastener to 60-70 in-lbs (6.8-7.9 Nm).
4. See Battery Cover (Removal Slot Shown): FXCWC Models. On FXCWC model, insert battery cover tabs into frame.
5. See Frame Fairing: FLSTSB Models. On FLSTSB model, install frame fairing.
   a. Insert fairing tab in frame bracket at the base of the fuel tank.
   b. Lower fairing holes over the seat mounting pins.
   c. Hand tighten the thumbscrew.

⚠WARNING

After installing seat, pull upward on seat to be sure it is locked in position. While riding, a loose seat can shift causing loss of control, which could result in death or serious injury. (00070b)

6. On FXCWC model, lower seat and press down to engage locating pins. On all other models, install seat. See Seats: Softail Models and follow procedure for the appropriate model.

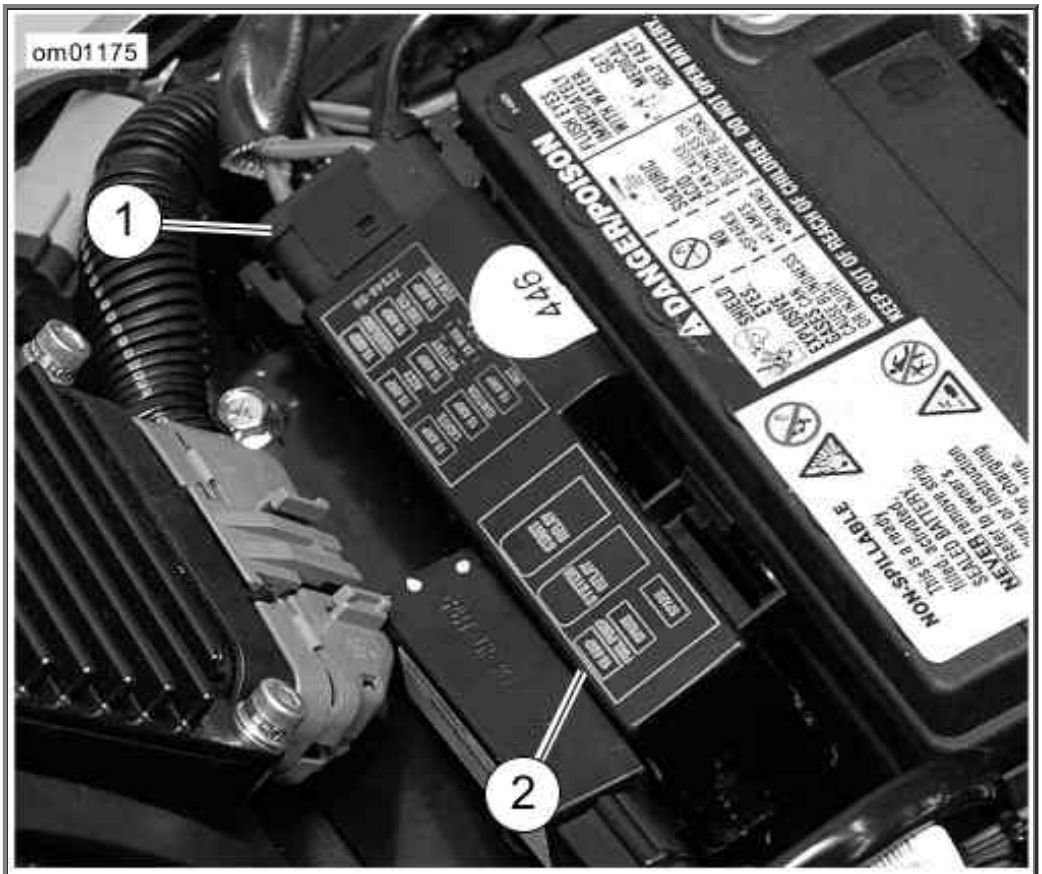

1. Main fuse
2. Fuse block cover

Fuse Block: Softail Models

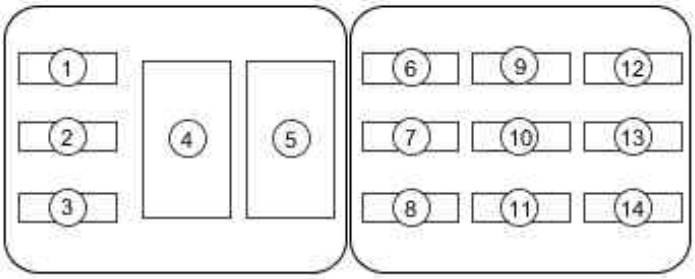

1. Fuel pump fuse
2. Spare fuse
3. Spare fuse
4. System relay
5. Start relay
6. Lights fuse
7. Ignition fuse
8. Instruments fuse
9. Accessory fuse
10. Battery fuse
11. P&A (2 amp max)
12. Headlamp fuse
13. Engine control fuse
14. ECM power fuse

Relay/Fuse Panel (Top View)

Main Fuse

See Fuse Block: Softail Models and Main Fuse. The 40-amp main fuse provides main power from the battery and protects the motorcycle wiring. The main fuse is located under the seat.

To access the main fuse, pull the main fuse connector from the cavity in the left side of the fuse block cover.

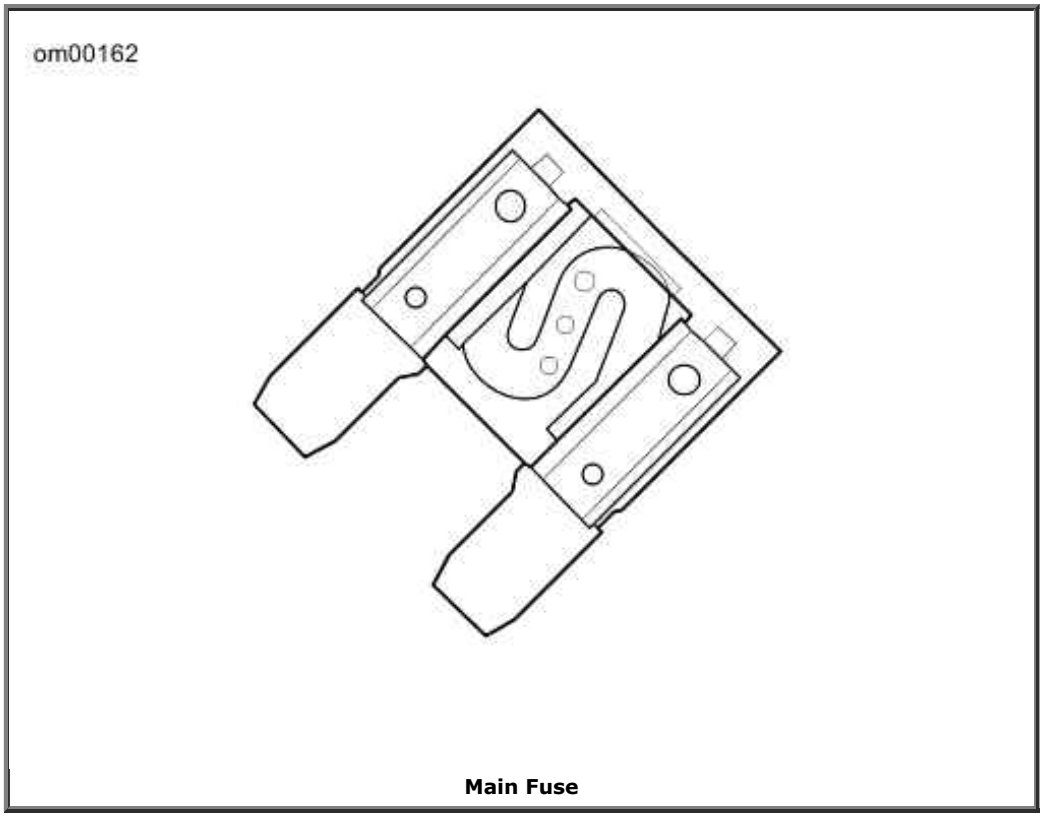

Main Fuse

Seats: Softail Models

General

See Seat Tongue (typical) and Frame Back. Softail motorcycles (except FXCWC and FLSTSB) have a tongue underneath the seat that slides into a slot in the back end of frame.

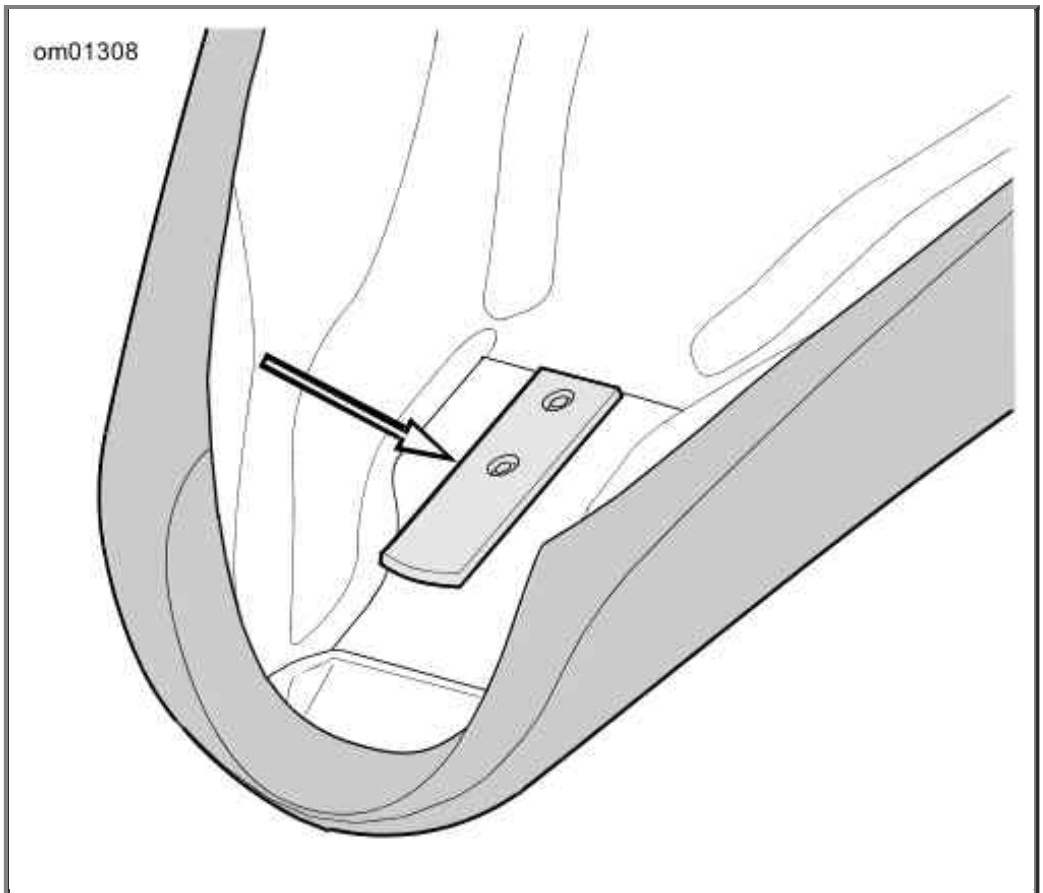

Seat Tongue (typical)

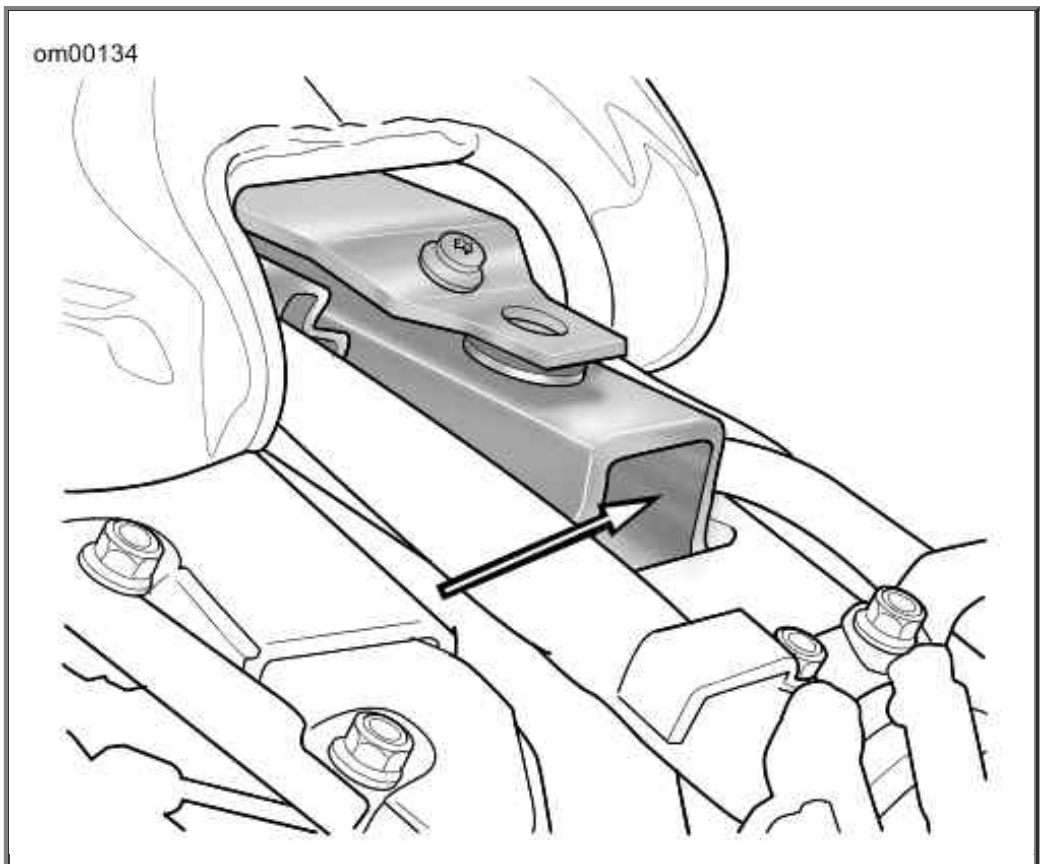

Frame Back

Seats: FLST/FLSTN/FLSTC/FLSTF

Removal/Installation

⚠WARNING

After installing seat, pull upward on seat to be sure it is locked in position. While riding, a loose seat can shift causing loss of control, which could result in death or serious injury. (00070b)

See Seat: FLST/FLSTN/FLSTC/FLSTF Models and Seat Mounting Stud. The passenger seat attaches with a single thumbscrew (1) at the rear and engages the seat mounting nuts (4) at the front.

To remove seat, remove passenger seat (2, 7) and seat mounting nuts (4). When installing seat, insert tongue at front of seat into the channel in the frame and install seat mounting nuts through holes in seat strap (3) and thread into mounting holes. Slide slots on passenger seat (2, 7) on to seat mounting nuts. Install thumbscrew (1) and tighten. Tighten seat mounting nuts (4).

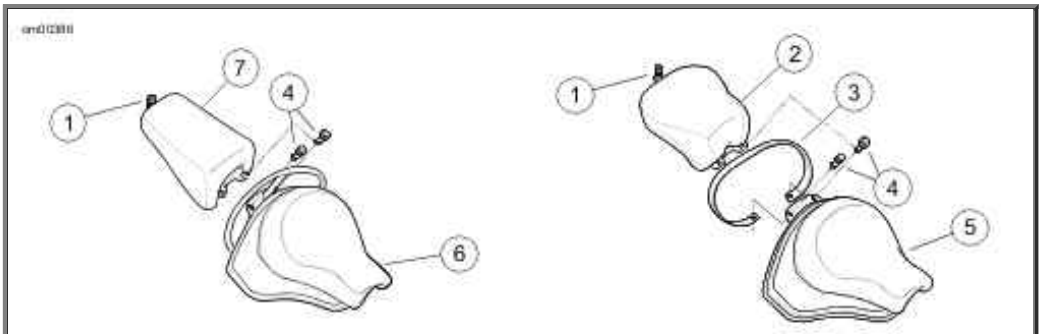

1. Thumbscrew
2. Passenger seat (FLST/FLSTC/FLSTF)
3. Seat strap (FLST/FLSTC/FLSTF)
4. Seat mounting nut (2)
5. Seat (FLST/FLSTC/FLSTF)
6. Seat (FLSTN)
7. Passenger seat (FLSTN)

Seat: FLST/FLSTN/FLSTC/FLSTF Models

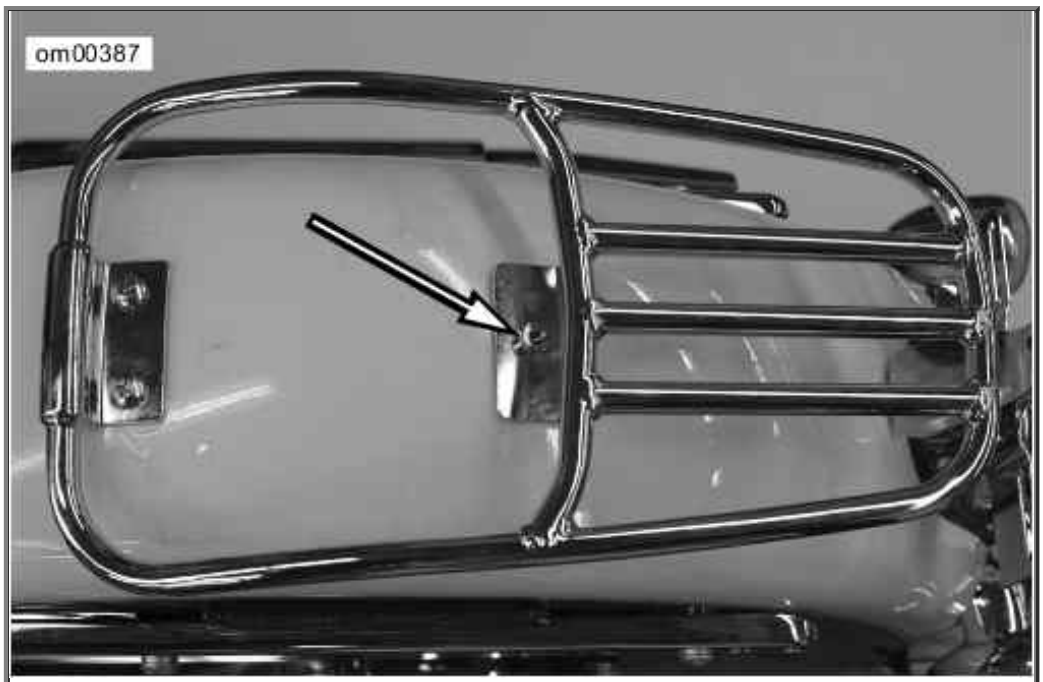

Seat Mounting Stud

Seats: FXST/FXSTB/FXSTC

NOTE:

The FXSTC seat has a passenger backrest. The backrest is attached to the sissy bar with two fasteners.

Removal

1. See Seat: FXST/FXSTB/FXSTC Models. Remove seat mounting screw from top of rear fender or remove two acorn nuts securing FXSTC seat to sissy bar.
2. See Seat Tongue (typical). Push seat rearward to free tongue at front of seat from slot or bracket in frame back.
3. Gently slide seat out of seat strap.
4. Remove seat from frame.

Installation

1. Slide seat into seat strap.
2. Place seat on frame back.
3. Slide seat toward front of motorcycle until the tongue locks into the bracket or slot in the frame back.
4. Push seat forward until rear fender seat retention nut is centered in hole of mounting bracket or FXSTC seat is aligned with sissy bar attaching points.
5. On FXST and FXSTB models, hand tighten seat mounting screw. On FXSTC models, install acorn nuts to rear of seat.

⚠WARNING

After installing seat, pull upward on seat to be sure it is locked in position. While riding, a loose seat can shift causing loss of control, which could result in death or serious injury. (00070b)

6. Pull up on seat to verify that it is properly secured.

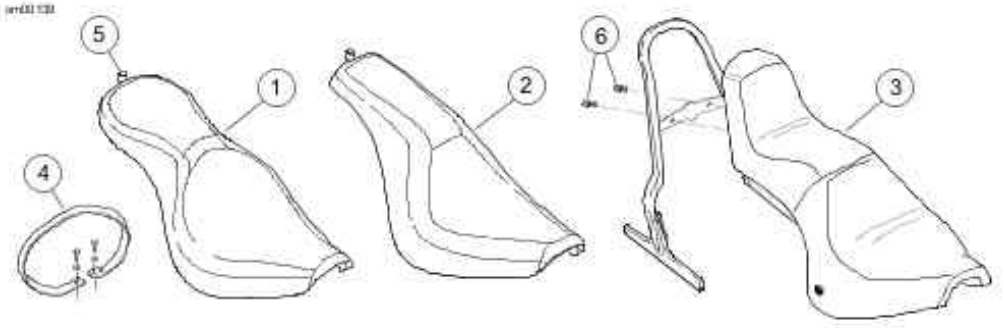

1. Seat (FXST)
2. Seat (FXSTB)
3. Seat (FXSTC)
4. Seat strap
5. Seat mounting screw
6. Acorn nuts

Seat: FXST/FXSTB/FXSTC Models

Seat Straps: FXST/FXSTB/FXSTC

The seat straps are attached under the seat. The mounting hole is above the engine control module.

Seat: FXCW

Removal

1. Lift rear of seat to disengage the locating pins from grommets.
2. Pull seat to the rear to disengage tongue from the frame.

Installation

1. Place seat on frame back.
2. See Seat: FXCW Models. Slide seat toward front of motorcycle until the tongue locks into the bracket or slot in the frame back.
3. See Seat Mounting Grommets: FXCW Models. Push seat forward to align locating pins with the grommets.
4. Push seat down to engage locating pins with the grommets. Wiggle seat to make sure it is secure.

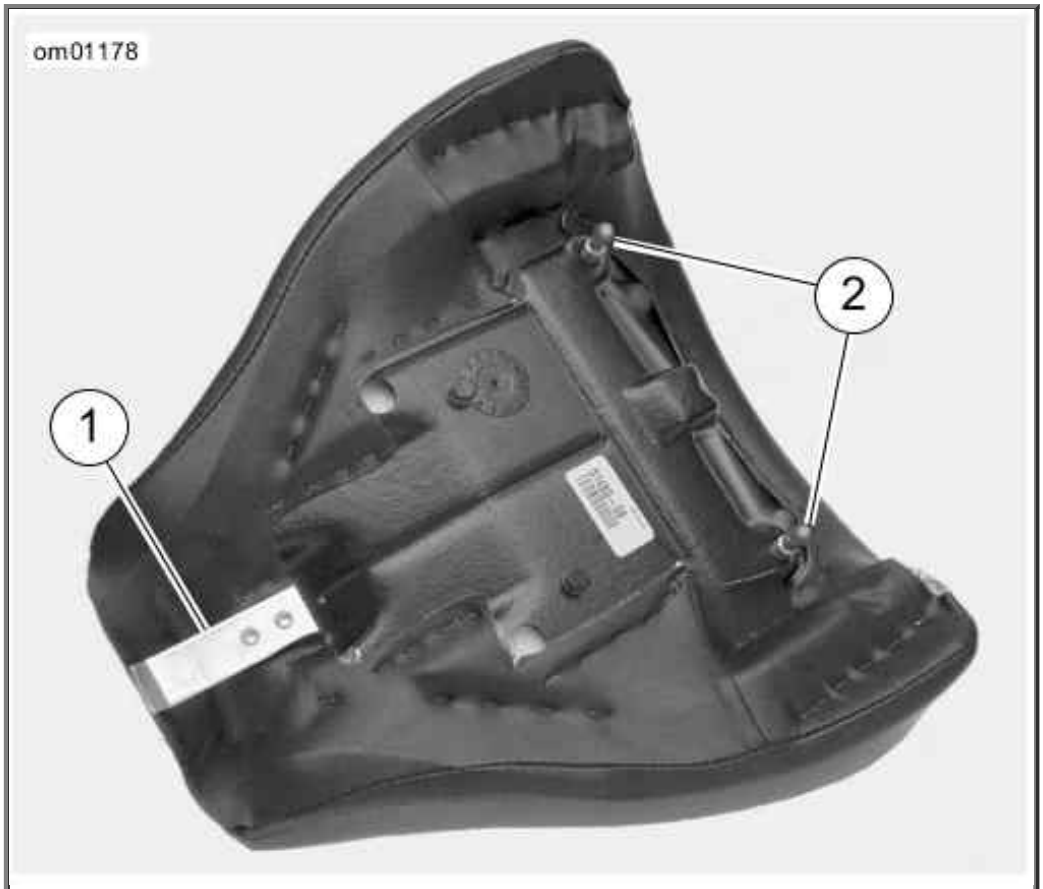

1. Tongue
2. Locating pins

Seat: FXCW Models

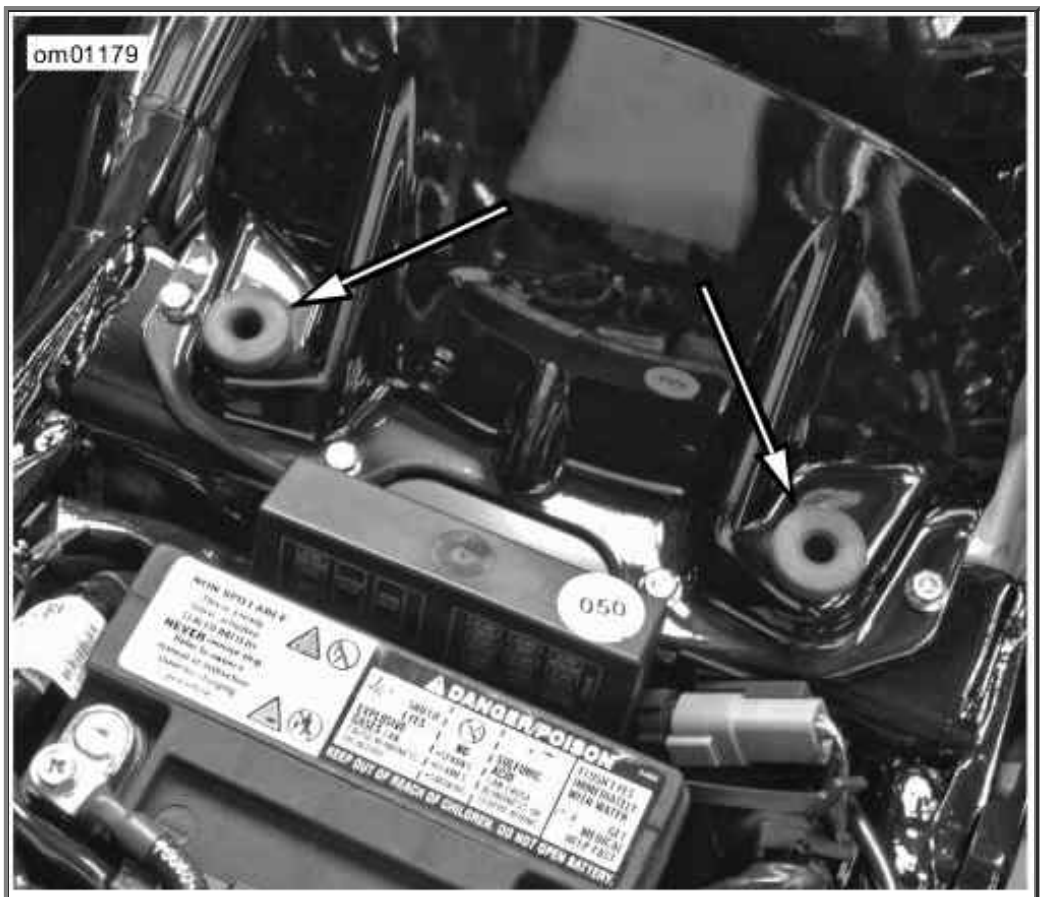

Seat Mounting Grommets: FXCW Models

Seat: FLSTSB

NOTE:

Raise rear of seat only slightly during removal or installation. Pivoting rear of seat up too high can cause the nose of the seat to damage the leather trim panel on the fuel tank.

Removal

1. See Seat: FLSTSB Models. Remove screw (1) from the seat hinge at the front of the seat.
2. Raise the rear of the seat to disengage the springs (2) from the seat spring mounting pins (3). Remove seat.

Installation

1. See Seat: FLSTSB Models. Align seat hinge with the mounting bracket on the frame.
2. From the right side of the motorcycle, insert the screw (1) into the seat hinge and tighten to 14-16 ft-lbs (19.0-21.7 Nm).
3. Align bushings on seat springs (2) with the mounting pins (3). Push rear of seat down to engage the seat spring mounting pins.

Adjusting Seat Position

Seat position may be adjusted forward or rearward for rider comfort.

1. Remove the seat.
2. See Seat Adjustment: FLSTSB Models. Remove the nut on the seat hinge.
3. Remove the bolts from the seat spring support bracket.

   NOTE:

   See Seat Configurations: FLSTSB Models. The seat hinge and seat spring support bracket must be installed in the same position (forward or rearward configuration) for the seat to fit properly on the motorcycle.

4. To position seat forward:
   a. See Seat Configurations: FLSTSB Models. Install hinge with the front tab in the slot.
   b. Install seat spring support bracket with springs toward the rear of the seat.
5. To position seat rearward:
   a. See Seat Configurations: FLSTSB Models. Install hinge with the rear tab in the slot.
   b. Install seat spring support bracket with springs toward the front of the seat.
6. Install nut on seat hinge and tighten to 20-25 ft-lbs (27.1-33.9 Nm).

7. Install screws for seat spring support bracket and tighten to 15-20 ft-lbs (20.3-27.1 Nm).

8. Install seat.

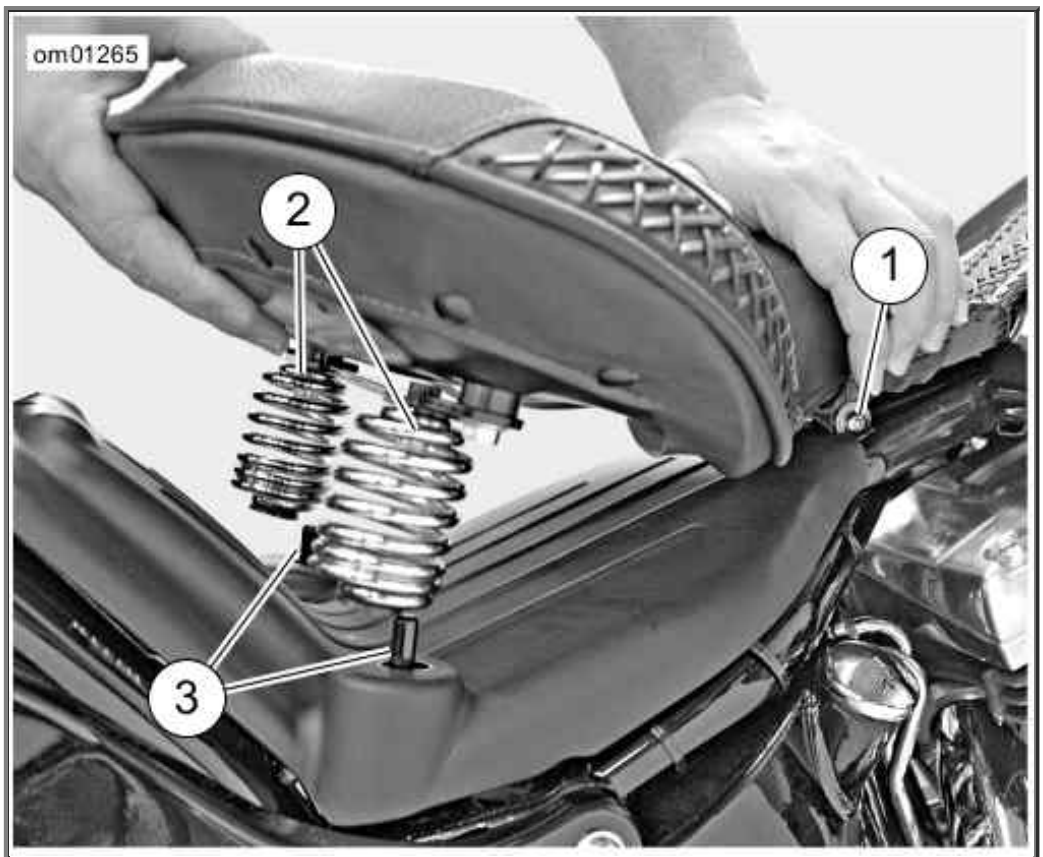

1. Screw
2. Seat springs
3. Seat spring mounting pins

Seat: FLSTSB Models

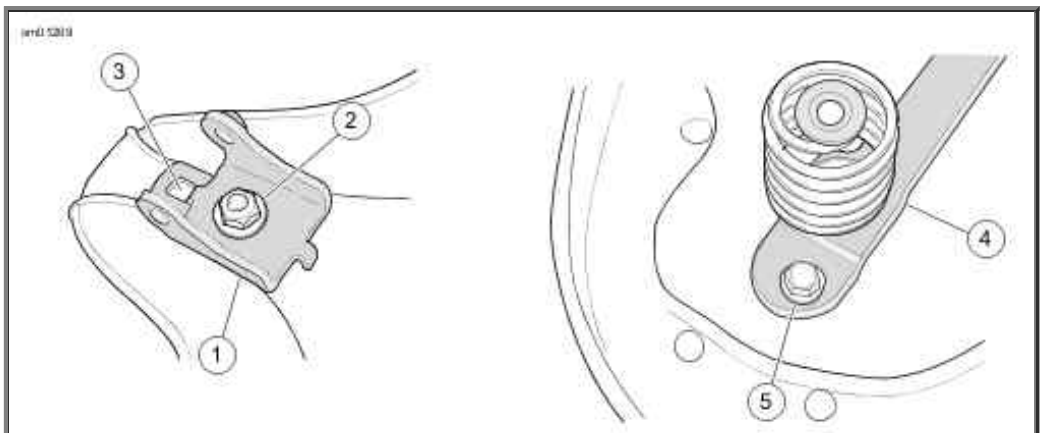

1. Seat hinge
2. Nut
3. Adjustment slot
4. Seat spring support bracket
5. Bolt (2)

Seat Adjustment: FLSTSB Models

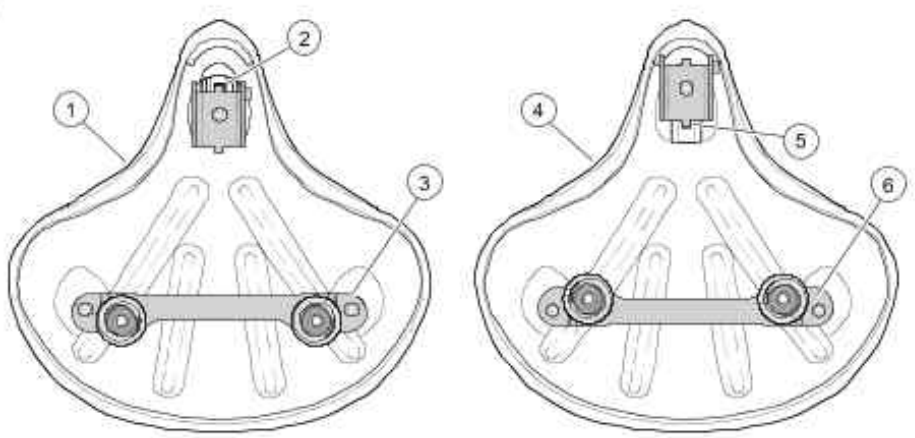

1. Forward seat configuration
2. Seat hinge, front tab in slot
3. Seat spring support bracket, springs toward the rear
4. Rearward seat configuration
5. Seat hinge, rear tab in slot
6. Seat spring support bracket, springs toward the front

Seat Configurations: FLSTSB Models

Seat: FXCWC

Rider Seat

The front of the rider seat is attached to the frame with a pivoting hinge. To open, pull back of rider seat up to release locating pins and pivot forward toward fuel tank. Nose of seat cushion may need to be pushed down to avoid catching on rear mount of console.

To close, rotate the rider seat back down into riding position ensuring that the locating pins properly engage their grommet seats.

Passenger Pillion Seat Deployment

A pillion seat, stored under the rider seat, can be deployed to accommodate a passenger.

NOTE:

The pillion seat supports up to 200 lbs. 90 kg .

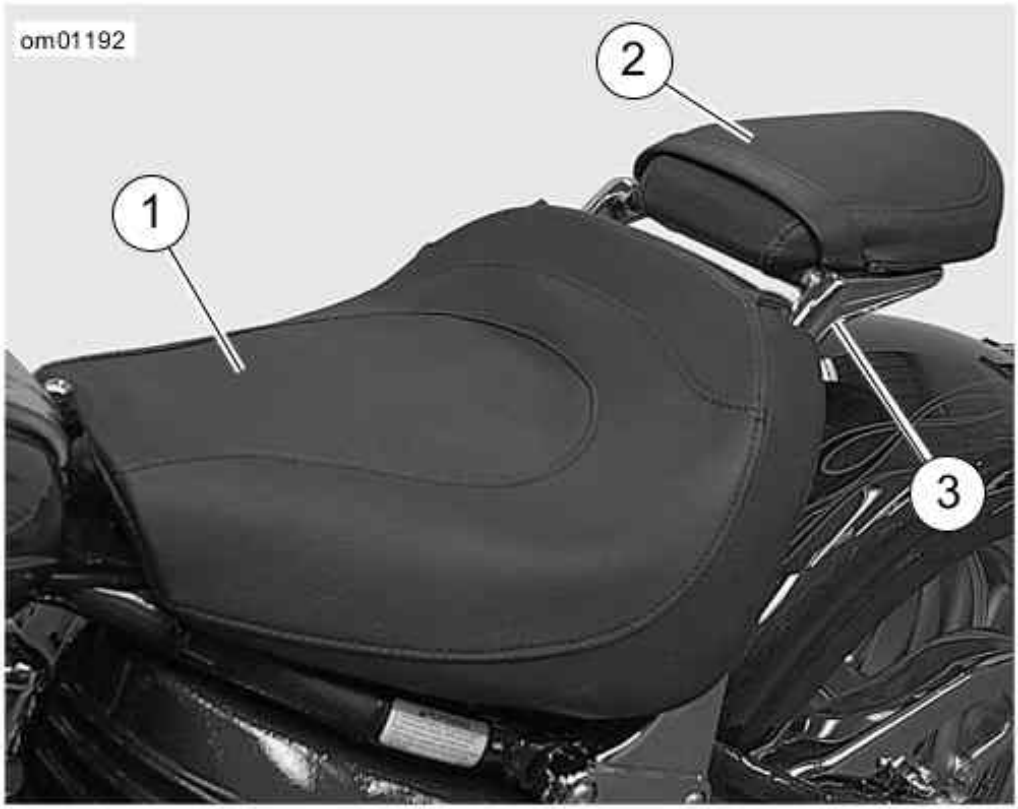

1. Rider seat
2. Passenger pillion
3. Pillion support

Seats: FXCWC

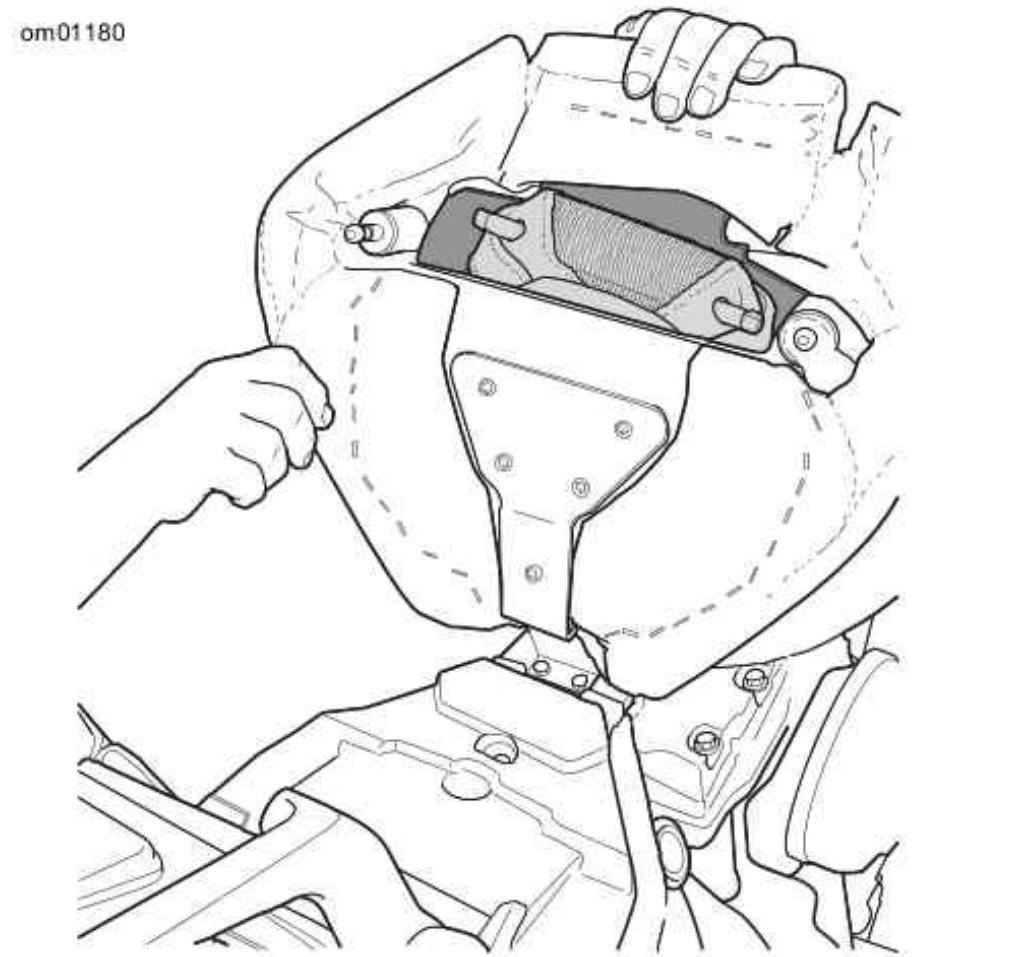

Opening Rider Seat: FXCWC Models

1. See Opening Rider Seat: FXCWC Models. Pull back of rider seat up to release locating pins and pivot forward toward fuel tank. Nose of seat cushion may need to be pushed down to avoid catching on rear mount of console.

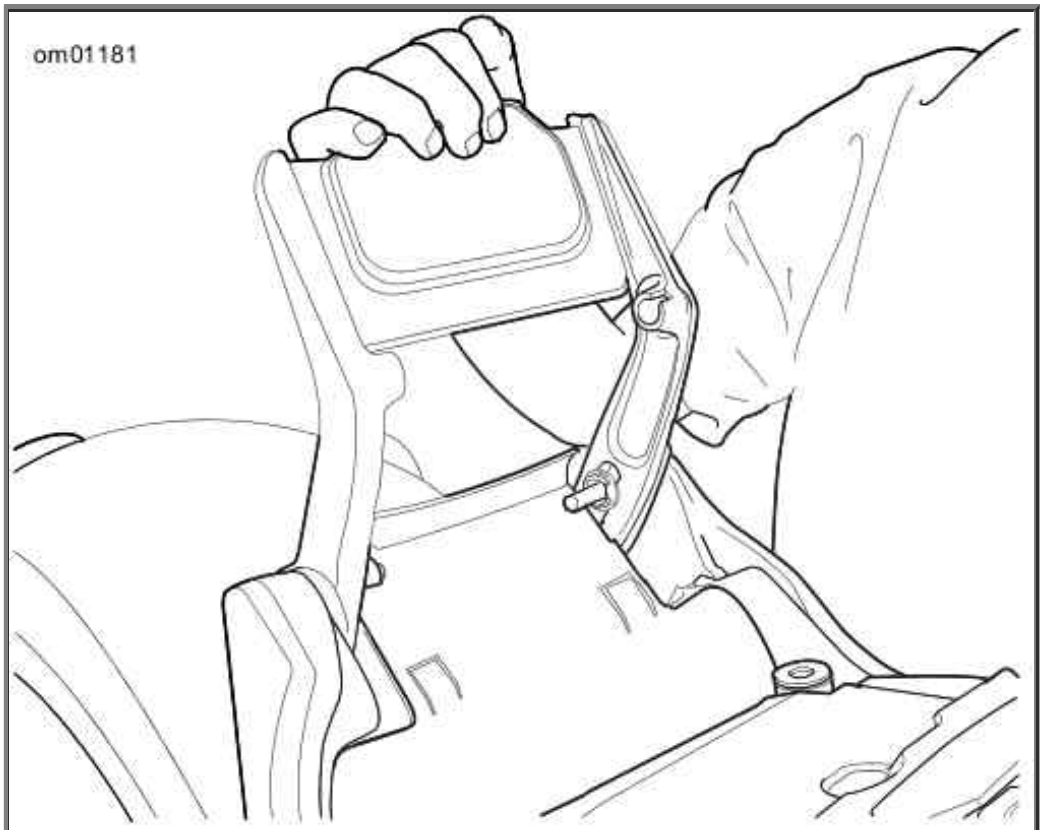

Positioning the Pillion Support: FXCWC Models

2. See Positioning the Pillion Support: FXCWC Models. Slide hinge pins of pillion support upward in side upright slots, then rotate pillion support approximately 180 degrees.

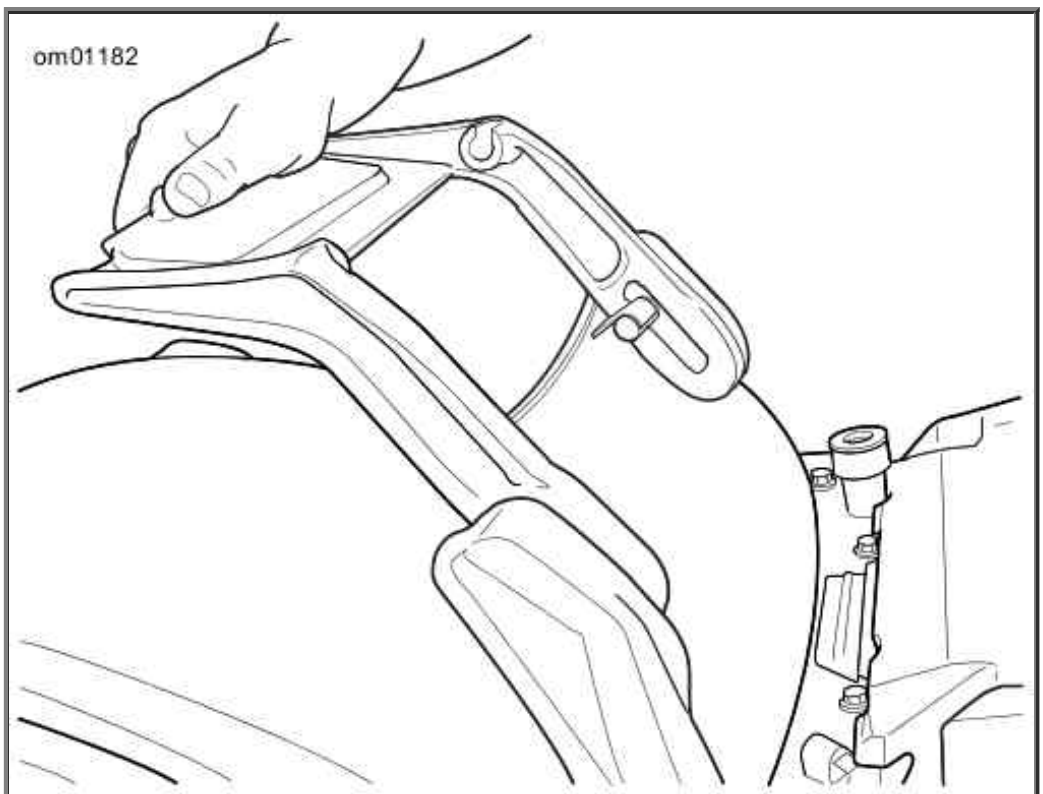

Pillion Support in Position: FXCWC Models

3. See Pillion Support in Position: FXCWC Models. Push pillion support back down the

slot so catch pin is fully engaged in bottom of side upright slots.

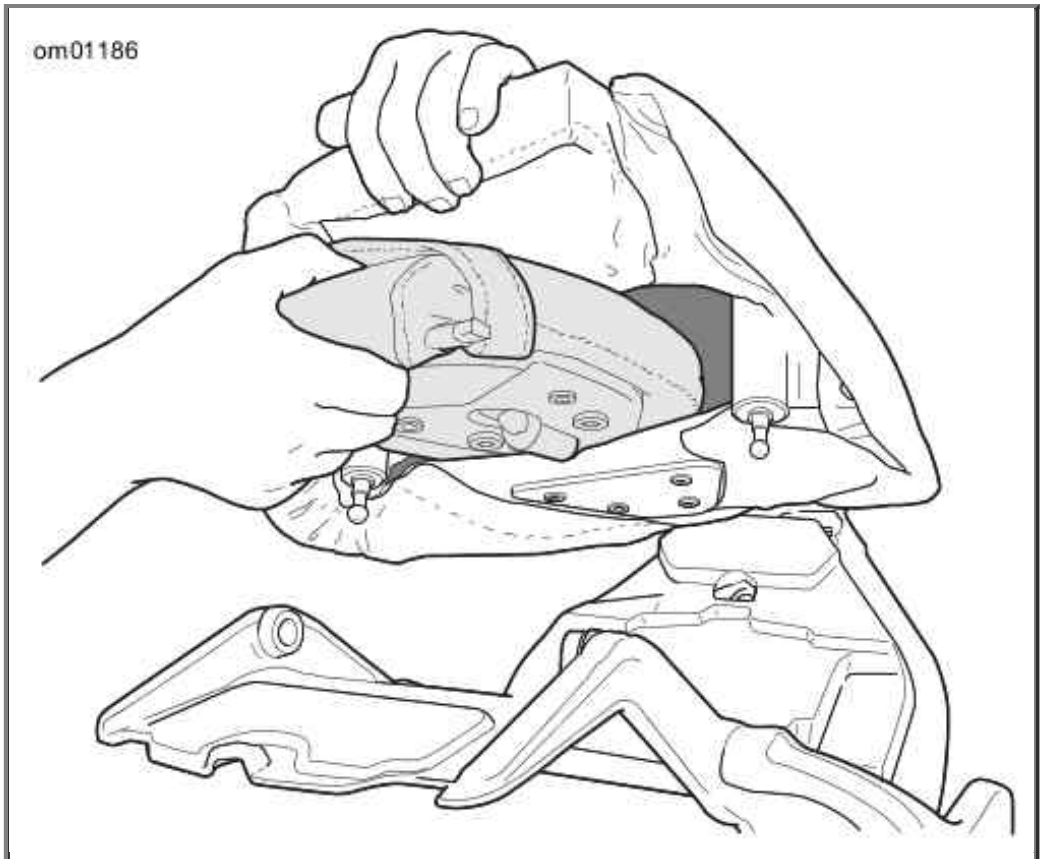

Removing Pillion From Rider Seat

4. See Removing Pillion From Rider Seat. Remove the pillion pad from the rider seat compartment.

5. Rotate the rider seat back down into riding position ensuring that the locating pins properly engage their grommet seats and the slots between the back cushions fit around the support uprights.

6. The pillion pad has two pins on the front; one is round (on the right side) and the other flat-keyed (on the left side). Insert the round, right-hand side into its pivot seat in the right side of the pillion support.

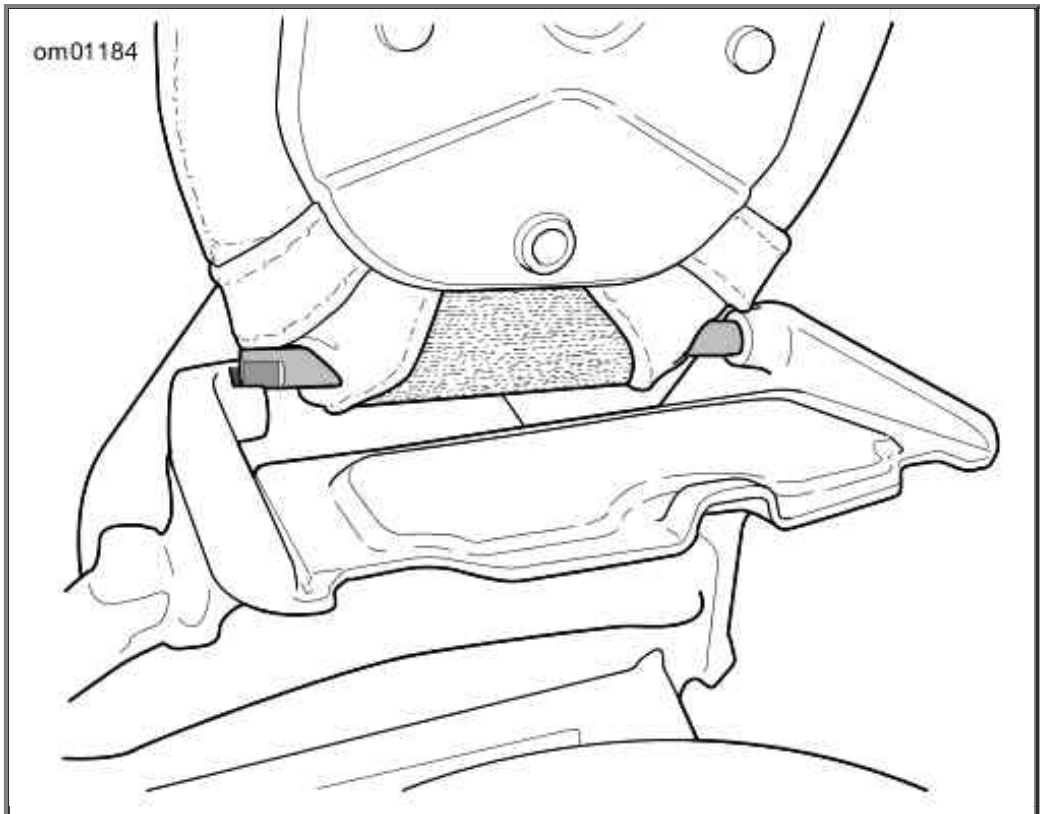

Inserting Pins Into Pillion Support: FXCWC Models

7. See Inserting Pins Into Pillion Support: FXCWC Models. When the pillion pad is approximately vertical, the left side flat key can then be put into its pivot seat on the pillion support.

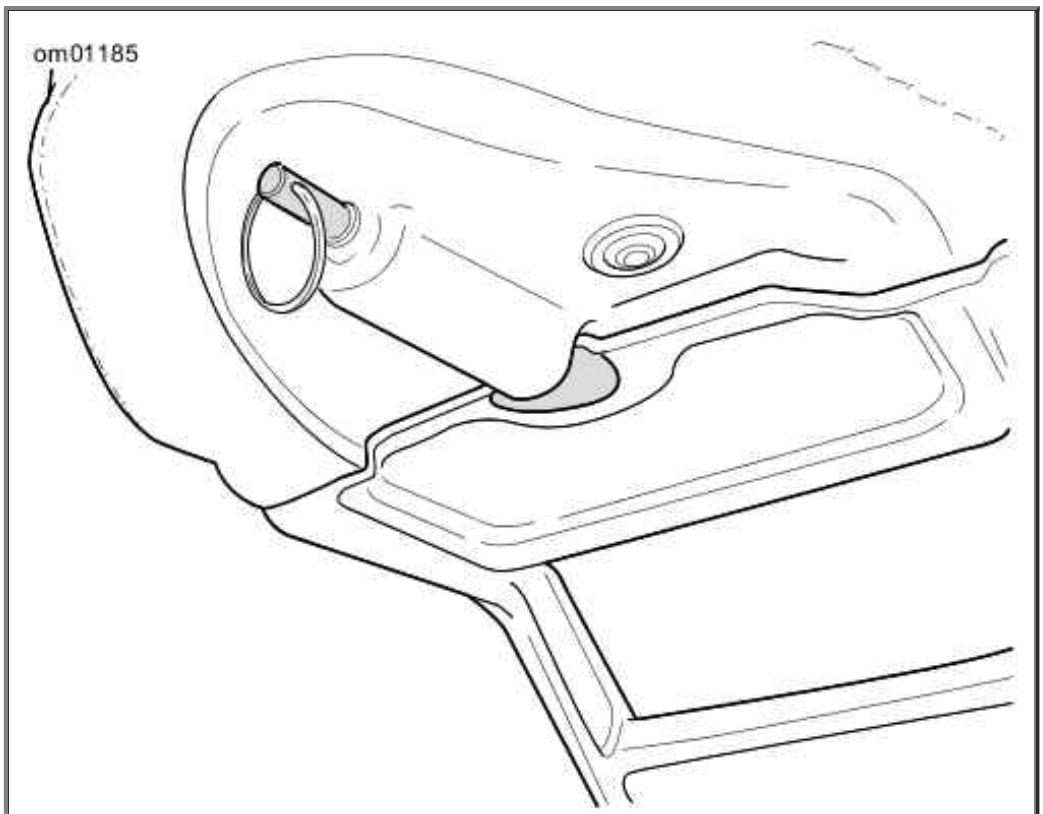

Pillion Latch Engaged: FXCWC Models

8. See Pillion Latch Engaged: FXCWC Models. Rotate the pillion pad to its horizontal position. Apply slight pressure on the end until the pillion pad latch catches on the back of the pillion support.

Stowing the Passenger Pillion

To stow the passenger pillion, unlatch the pillion pad by pulling on the latch ring under the rear of the pillion pad and reverse the pillion seat deployment instructions.

NOTE:

See Removing Pillion From Rider Seat. When stowing the pillion pad back in the rider seat compartment of the rider seat, the padding should be up and the pull tab goes in first. When properly stowed, the pillion pad's keyed pivot will be visible when looking at the opening of the rider seat compartment as shown in Opening Rider Seat: FXCWC Models.

Motorcycle Storage

Placing Motorcycle in Storage

CAUTION

Proper storage is important for the trouble-free operation of your motorcycle. See your Owner's Manual for storage recommendations or see a Harley-Davidson dealer. Improper storage procedures can lead to equipment damage. (00046a)

If the motorcycle will not be operated for several months, such as during the winter season, there are several tasks which should be performed. These steps will protect parts against corrosion, preserve the battery and prevent the build-up of gum and varnish in the fuel system.

⚠WARNING

Do not store motorcycle with gasoline in tank within the home or garage where open flames, pilot lights, sparks or electric motors are present. Gasoline is extremely flammable and highly explosive, which could result in death or serious injury. (00003a)

NOTE:

Make a list of everything you do and fasten it to a handgrip. When you take the motorcycle out of storage, this list will be your reference/checklist to get your motorcycle in operating condition.

1. Fill fuel tank and add a gasoline stabilizer. Use one of the commercially available gasoline stabilizers and follow the manufacturer's instructions.
2. Warm motorcycle to operating temperature. Change oil and turn engine over to circulate the new oil.
3. Check and adjust belt if necessary.
4. Check tire inflation. Adjust to proper inflation pressure.
5. To protect the vehicle's body panels, engine, chassis and wheels from corrosion, follow the

cosmetic care procedures described in the Accessory Maintenance section of this owner's manual prior to storage.

6. Prepare battery for winter storage. See Battery: General.

⚠WARNING

Explosive hydrogen gas, which escapes during charging, could cause death or serious injury. Charge battery in a well-ventilated area. Keep open flames, electrical sparks and smoking materials away from battery at all times. KEEP BATTERIES AWAY FROM CHILDREN. (00065a)

7. If the motorcycle is to be stored with security system armed, it will be necessary to connect a Battery Tender to maintain battery charge. If security system will not be armed and a Battery Tender is not available, either:

    a. Disconnect negative battery cable.

    b. Remove main fuse (if applicable).

8. If motorcycle is to be covered, use a material such as light canvas that will breathe. Plastic materials that do not breathe promote the formation of condensation.

Removing Motorcycle From Storage

⚠WARNING

The clutch failing to disengage can cause loss of control, which could result in death or serious injury. Prior to starting after extended periods of storage, place transmission in gear and push vehicle back and forth several times to assure proper clutch disengagement. (00075a)

1. See Battery: General for proper battery care. Charge and install the battery.

2. Remove and inspect the spark plugs. Replace if necessary.

3. Clean the air cleaner element.

4. Start the engine and run until it reaches normal operating temperature. Turn off engine.

5. Check amount of oil in the oil tank.

6. Check the transmission lubricant level.

7. Check controls to be sure they are operating properly. Operate the front and rear brakes, throttle, clutch and shifter.

8. Check steering for smoothness by turning the handlebars through the full operating range.

⚠WARNING

Be sure tires are properly inflated, balanced and have adequate tread. Inspect your tires regularly and see a Harley-Davidson dealer for replacements. Riding with excessively worn, unbalanced or under-inflated tires can adversely affect stability and handling, which could result in death or serious injury. (00014a)

9. Check tire pressure. Incorrect pressure will result in poor riding characteristics and can affect handling and stability.
10. Check all electrical equipment and switches including the stop lamp, turn signals and horn for proper operation.
11. Check for any fuel, oil or brake fluid leaks.

CAUTION

Turn engine over a few times to be sure there is no oil in the crankcase and that all oil has been pumped back into the oil tank. Stop engine and re-check oil level. Failure to do so can result in engine damage. (00071a)

Accessories Maintenance

Cleaning and General Maintenance

Clean and protect the cosmetic surfaces on your motorcycle as often as possible to inhibit rust and corrosion. To aid you in keeping your motorcycle clean, see your Harley-Davidson dealer for surface care products.

Harley-Davidson recommends the following products:

- SUNWASH (Part No. 94659-98): for general cleaning/washing of all surfaces.
- BUG REMOVER (Part No. 94657-98): for removing bugs from all surface finishes.
- HARLEY SPRAY CLEANER (Part No. 99817-99): all purpose cleaner and quick detailer for metal surfaces.
- HARLEY GLOSS (Part No. 94627-98): all purpose surface protectant provides UV protection and a gloss finish.

⚠WARNING

Observe warnings on labels of cleaning compounds. Failure to follow warnings could result in death or serious injury. (00076a)

⚠WARNING

Do not wash brake discs with cleaners containing chlorine

or silicone. Cleaners containing chlorine and silicone can impair brake function, which could result in death or serious injury. (00077a)

CAUTION

Do not use pressure washers to clean wheel bearings, sprocket bearings, steering head bearings and swingarm pivot bearings. Doing so can result in equipment damage. (00489b)

Leather Care

NOTE:

Many Harley-Davidson accessories and seats are either made of leather or have leather inserts. Natural materials age differently and require different care than man-made materials. Seat covers and panels made of leather will gain "character", such as wrinkles, with age. Leather is porous and organic and each leather product will settle into its own distinct form with use. Your leather product will mature into its own custom shape and style from the sun, rain and the miles. This maturing is natural and will enhance the custom quality of your Harley-Davidson motorcycle.

Leather must be periodically cleaned and treated to maintain its appearance and extend its life. Clean and treat leather once a season or more frequently under adverse conditions.

CAUTION

Do not use bleach or detergents containing bleach on saddlebags, seats, tank panels or painted surfaces. Doing so can result in equipment damage. (00229a)

- Do not use ordinary soap to clean leather or fur. It could dry or remove the oils from the leather.
- Use ONLY a good quality saddle soap to clean leather. Be sure you rinse saddle soap off thoroughly before treating leather.
- Never try to dry leather quickly, using artificial means. Always let leather dry naturally, at room temperature.

1. Vacuum or blow dust off.
2. Thoroughly clean leather with a good quality saddle soap, following manufacturer's directions. Rinse thoroughly with clean sponge or cloth and water. Allow leather to dry.
3. Once leather is dry, treat with a good quality leather treatment, such as LEATHERCARE (Part No. 98261-91).
4. Always allow leather to dry completely before using.

Denim Finish

General

If your vehicle has denim (flat or matte) finish please read below.

- The Denim finish has qualities which differ from high gloss finishes on all other Harley-Davidson motorcycles. Like denim fabric, Denim paint will burnish or mar with age and use, thus adding character and personality to the finish of the motorcycle.
- If scratched, the color coat of paint does nick/scuff and these marks can not be rubbed out.
- If polished, the finish will become less matte and more glossy over time.

How to Clean

1. For heavier deposits:

    a. Use grease cutting dishwashing detergent and a clean H-D wash-mitt. (Dilute the detergent per the instruction provided by its manufacturer.)

    b. Rinse thoroughly with clean water.

2. For light deposits, use glass cleaner (ammonia base) and H-D Soft Cloth. This helps remove finger prints and light soil.

3. For final detailing use H-D Gloss with H-D Soft Cloth.

Satin Stainless Paint: FXCW Models

Many parts on FXCW model vehicles have a satin stainless paint finish. Clean and care for these parts using the cleaning instructions for denim surfaces. Refer to Denim Finish.

Magnesium Part Care: FXCW/FXCWC Models

Rear turn signal and license plate assemblies on FXCW and FXCWC models are made from magnesium. Automotive wax may be used on these parts to protect against corrosion.

Whitewall Tires

Use a good quality, commercial whitewall cleaner and follow the manufacturer's directions.

Wheel Care

Some vehicle's wheels are aluminum and do not have a protective coating. Other vehicles have laced wheels with chrome plated rims and zinc or chrome plated spokes. Damage from harsh chemicals, acid based wheel cleaners, brake dust and lack of maintenance can occur. Regular washing and the use of a corrosion protectant will help to maintain their original appearance. Harley-Davidson WHEEL AND TIRE CLEANER (Part No. 94658-98) is recommended for cleaning wheels and tires. Then use HARLEY GLOSS (Part No. 94627-98) to protect the wheel surfaces.

NOTES:

- *It is imperative that the wheels are cared for weekly to guard against pitting and corrosion.*
- *Corrosion of these components is not considered to be a defect in materials or workmanship.*

Harley-Davidson recommends the following products:

- WHEEL AND TIRE CLEANER (Part No. 94658-98): cleaner/degreaser for wheels, tires and engine.
- HARLEY GLOSS (Part No. 94627-98): all purpose surface protection the provides UV protection and a gloss finish.

See a Harley-Davidson dealer for cleaning, polishing and waxing products.

Windshields

CAUTION

Polycarbonate windscreens/windshields require proper attention and care to maintain. Failure to maintain polycarbonate properly can result in damage to the windscreen/windshield. (00483d)

- Do not clean in hot sun or high temperature.
- Powdered, abrasive or alkaline cleanser will damage the windscreen/windshield.

CAUTION

Do not use harsh chemicals including rain sheeting products on Harley-Davidson windshields. They can cause dulling or hazing. If you want to use a windshield protectant on your windshield, try Harley Glaze Polish and Sealant (00231a)

CAUTION

Do not use benzine, paint thinner, gasoline or any other type of harsh cleaner on the windshield. Doing so will damage the windshield surface. (00232a)

NOTES:

- *To remove minor surface scratches use NOVUS® No. 2 SCRATCH REMOVER (Part No. 99836-94T).*
- *Covering the windshield with a clean, wet cloth for approximately 15-20 minutes before washing will make dried bug removal easier.*

1. Use mild soap and warm water to wash the windshield.
2. Wipe dry with a soft, clean towel.

NOTE:

To treat your Lexan windshield with water repellent use WINDSHIELD WATER REPELLENT TREATMENT (Part No. 99841-02).

Troubleshooting

Troubleshooting: General

⚠WARNING

The troubleshooting section of the Owner's Manual is a guide to diagnose problems. Read the service manual before performing any work. Improper repair and/or maintenance could result in death or serious injury. (00080a)

The following checklist of possible operating troubles and their probable causes will be helpful in keeping your motorcycle in good operating condition. More than one of these conditions may be causing trouble and should be carefully checked.

Engine

Starter Does Not Operate or Does Not Turn Engine Over

1. Engine run switch in OFF position.
2. Ignition switch not ON.
3. Discharged battery or loose or corroded connections (solenoid chatters).
4. Clutch lever not squeezed against handlebar or transmission not in neutral.
5. Jiffy stand not in retracted position (required for international models only).
6. Blown fuse.

Engine Turns Over But Does Not Start

1. Fuel tank empty.
2. Discharged battery or loose or broken battery terminal connections.
3. Fouled spark plugs.
4. Spark plug cable connections loose or in bad condition and shorting.
5. Loose or corroded wire or cable connection(s) at coil or battery.
6. Fuel pump inoperative.
7. Blown fuse.

Starts Hard

1. Spark plugs in bad condition, have improper gap, or are partially fouled.
2. Spark plug cables in bad condition and leaking.
3. Battery nearly discharged.

4. Loose wire or cable connection(s) at one of the battery terminals or at coil.
5. Engine oil too heavy (winter operation).
6. Fuel tank vent plugged or fuel line closed off, restricting fuel flow.
7. Water or dirt in fuel system.
8. Fuel pump inoperative.

Starts But Runs Irregularly or Misses

1. Spark plugs in bad condition or partially fouled.
2. Spark plug cables in bad condition and leaking.
3. Spark plug gap too close or too wide.
4. Battery nearly discharged.
5. Damaged wire or loose connection at battery terminals or coils.
6. Intermittent short circuit due to damaged wire insulation.
7. Water or dirt in fuel system.
8. Fuel vent system plugged. See dealer.
9. One or more injectors fouled.

A Spark Plug Fouls Repeatly

1. Fuel mixture too rich.
2. Incorrect spark plug.

Pre-ignition or Detonation (Knocks or Pings)

1. Incorrect fuel.
2. Incorrect spark plug for the kind of service.

Overheats

1. Insufficient oil supply or oil not circulating.
2. Heavy carbon deposit from lugging engine. See dealer.
3. Insufficient air flow over cylinder heads during extended periods of idling or parade duty.

Excessive Vibration

1. Rear fork pivot shaft nuts loose. See dealer.
2. Front engine mounting bolts loose. See dealer.
3. Engine to transmission mounting bolts loose. See dealer.
4. Broken frame. See dealer.
5. Front chain or links tight as a result of insufficient lubrication or belt badly worn.
6. Wheels and/or tires damaged. See dealer.
7. Vehicle not properly aligned. See dealer.

Electrical System

Alternator Does Not Charge

1. Module not grounded. See dealer.
2. Engine ground wire loose or broken. See dealer.
3. Loose or broken wires in charging circuit. See dealer.

Alternator Charge Rate is Below Normal

1. Weak battery.
2. Excessive use of add-on accessories.
3. Loose or corroded connections.
4. Extensive periods of idling or low speed riding.

Transmission

Transmission Shifts Hard

1. Bent shifter rod. See dealer.

Transmission Jumps Out of Gear

1. Worn shifter dogs in transmission. See dealer.

Clutch Slips

1. Clutch controls improperly adjusted. See dealer.

2. Worn friction discs. See dealer.
3. Insufficient clutch spring tension. See dealer.

Clutch Drags or Does Not Release

1. Clutch controls improperly adjusted. See dealer.
2. Primary chaincase overfilled.
3. Clutch discs warped. See dealer.

Clutch Chatters

1. Friction discs or steel discs worn or warped. See dealer.

Brakes

Brakes Do Not Hold Normally

1. Master cylinder low on fluid. See dealer.
2. Brake line contains air bubbles. See dealer.
3. Master cylinder piston worn. See dealer.
4. Brake pads contaminated with grease or oil. See dealer.
5. Brake pads badly worn. See dealer.
6. Brake disc badly worn or warped. See dealer.
7. Brake fades because of heat build up. Excessive braking or brake pads dragging. See dealer.
8. Brake drags. Insufficient hand lever free play. See dealer.

Warranties and Responsibilities

Warranty and Maintenance: Softail Models

This Owner's Manual contains your new motorcycle warranty.

It is the owner's responsibility to follow the scheduled mileage intervals as specified; all of the specified maintenance services must be performed to keep your warranty valid.

1. Make an appointment with a Harley-Davidson dealer for inspection and service just before you have ridden 1000 miles 1600 kilometers or 500 miles 800 kilometers for Springer models.

2. Bring this Owner's Manual with you when you visit your dealer to have your motorcycle inspected and serviced.

3. Have the dealer technician sign at the proper mileage interval. The records should be retained by the owner as proof of proper maintenance.

4. Keep receipts covering any parts, service or maintenance performed. These records should be transferred to each subsequent owner.

⚠WARNING

Do not use aftermarket parts and custom made front forks which can adversely affect performance and handling. Removing or altering factory installed parts can adversely affect performance and could result in death or serious injury. (00001a)

Harley-Davidson dealerships are independently owned and operated and may sell parts and accessories that are not manufactured or approved by Harley-Davidson. Therefore, you should understand that we are not and cannot be responsible for the quality, suitability, or safety of any non-Harley-Davidson part, accessory or design modification, including labor, which may be sold and/or installed by our dealers.

Keeping It All Harley-Davidson

1. Keep your Harley-Davidson completely Harley-Davidson.

2. Insist that your dealer uses only Genuine replacement parts to keep your Harley-Davidson motorcycle and its warranty intact.

Exacting design and stringent testing ensure performance and warranty coverage. Again, insist on Genuine parts for your genuine Harley-Davidson motorcycle.

NOTE:

Installing off-road or competition parts to enhance performance may void all or part of your new motorcycle warranty. See the Harley-Davidson Limited Warranty in this manual or a Harley-Davidson dealer for details.

CAUTION

It is possible to overload your motorcycle's charging system by adding too many electrical accessories. If your combined electrical accessories operating at any one time consume more electrical current than your vehicle's charging system can produce, the electrical consumption can discharge the battery and cause vehicle electrical system damage. See a Harley-Davidson dealer for advice about the amount of current consumed by additional electrical accessories, or for necessary wiring changes. (00211b)

Important Moving Information

If you move from your present address, or sell your motorcycle, please fill out and mail the post card at the back of this manual. This is necessary in the event that the Company needs to contact the owner concerning information that could affect the safe operation of this motorcycle.

EPA Noise Regulations in the United States

EPA noise regulations require that the following statements be included in the Owner's Manual.

TAMPERING WITH NOISE CONTROL SYSTEM PROHIBITED: Federal law prohibits the following acts or the causing thereof: (1) The removal or rendering inoperative by any person other than for purposes of maintenance, repair, or replacement of any device or element of design incorporated into any new vehicle for the purpose of noise control prior to its sale or delivery to the ultimate purchaser or while it is in use, or (2) the use of the vehicle after such device or element of design has been removed or rendered inoperative by any person.

AMONG THOSE ACTS PRESUMED TO CONSTITUTE TAMPERING ARE THE ACTS LISTED BELOW.

1. Replacing the muffler(s) and/or the entire exhaust system with parts not certified to be noise legal for street use.
2. Removing or modifying the muffler internal baffles in any way.
3. Replacing the air intake/cleaner assembly with one not certified to be noise legal for street use.
4. Modifying the air intake/cleaner assembly in such a way as to make the vehicle no longer noise legal for street use.

Harley-Davidson recommends that any and all noise related maintenance be done by an authorized Harley-Davidson dealer using genuine Harley-Davidson parts.

California Evaporative Emission Controls: 2009 Models

All new model year 2009 Harley-Davidson motorcycles sold in the State of California are equipped with an evaporative emission control system. This system is designed to meet the CARB regulations in effect at the time of manufacture.

The system requires a small amount of maintenance. Periodic inspection is required to make sure hoses are properly routed, not kinked or blocked and that all fittings are secure. Mounting hardware should also be checked periodically for tightness.

Warranty/Service Information

Any authorized Harley-Davidson dealer is responsible for providing the warranty repair work on your motorcycle. If you have any questions regarding warranty obligations contact your selling dealer.

For normal service work or warranty work under the above conditions, you may obtain the name and location of your nearest U.S. Harley-Davidson dealer by calling 1-800-490-9635 (toll free), in any state except Alaska and Hawaii.

NOTE:

The number shown above is accessible only with a touch-tone phone in the United States.

Reporting Safety Defects in United States

Safety defects must be reported to the National Highway Traffic Safety Administration (NHTSA) and Harley-Davidson.

NHTSA Statement

If you believe that your vehicle has a defect which could cause a crash or could cause injury or death, you should immediately inform the National Highway Traffic Safety Administration (NHTSA) in addition to notifying Harley-Davidson.

If NHTSA receives similar complaints, it may open an investigation, and if it finds that a safety defect exists in a group of vehicles, it may order a recall and remedy campaign. However, NHTSA cannot become involved in individual problems between you, your dealer, or Harley-Davidson.

To contact NHTSA, refer to NHTSA Contacts.

NHTSA Contacts

ITEM	DATA
Phone	Call the Auto Safety Hot Line toll-free at 1-888-DASH-2DOT
Mail	U.S. Department of Transportation, National Highway Traffic Safety Administration, Office of Defects Investigation, NVS-210, 400 7th Street S.W., Washington, D.C. 20590
Web site	www.nhtsa.dot.gov

You can also obtain other information about motor vehicle safety from the hot line.

Owner Transfer Identification Form

When purchasing a pre-owned Harley-Davidson or Buell, we encourage you to submit an Owner Transfer Notification Form. It is critical that new owner information is communicated to Harley-Davidson. New owner information is required to be on file with Harley-Davidson to transfer an Extended Service Plan Contract. Harley-Davidson is also required by the National Traffic and Motor Vehicle Safety Act to notify all owners in the event of a recall. The form may be obtained at any Harley-Davidson dealer.

Required Documentation for Imported Motorcycles

If a Harley-Davidson is imported into the United States, additional documentation is required to be eligible for the United States Manufacturer's Limited Warranty. A Harley-Davidson dealer can provide a form explaining the requirements.

Limited Motorcycle Warranty

2009 HARLEY-DAVIDSON MOTORCYCLE LIMITED WARRANTY

24 Months/Unlimited Miles

Harley-Davidson warrants for any new 2009 Harley-Davidson motorcycle/sidecar that an authorized Harley-Davidson dealer will repair or replace without charge any parts found under normal use to be defective in factory materials or workmanship. Such repair and replacement will be Harley-Davidson's sole obligation and the customer's sole remedy under this warranty.

THERE IS NO OTHER EXPRESS WARRANTY (OTHER THAN THE SEPARATE EMISSIONS AND NOISE WARRANTIES) ON THE MOTORCYCLE. ANY IMPLIED WARRANTY OF MERCHANTABILITY OR FITNESS FOR PARTICULAR PURPOSE IS LIMITED TO THE DURATION OF THIS WARRANTY.

Some states do not allow limitations on how long an implied warranty lasts, so the above limitation may not apply to you.

TO THE FULLEST EXTENT ALLOWED BY LAW, HARLEY-DAVIDSON AND ITS DEALERS SHALL NOT BE LIABLE FOR LOSS OF USE, INCONVENIENCE, LOST TIME, COMMERCIAL LOSS OR OTHER INCIDENTAL OR CONSEQUENTIAL DAMAGES. Some states do not allow the exclusion or limitation of incidental or consequential damages, so the above limitation or exclusion may not apply to you. This warranty gives you specific legal rights, and you may have other rights which vary from state to state.

The following terms and conditions apply to this warranty:

Duration

1. The duration of this limited warranty is twenty four months, starting from the earlier of (a) the date of initial retail purchase and delivery from an authorized Harley-Davidson dealer, or (b) the third anniversary of the last day of the model year of the motorcycle/sidecar. Your dealer will submit an electronic Sales and Warranty Registration form to initiate your warranty.

2. Any unexpired portion of this limited warranty will be transferred to subsequent owners, upon the resale of the motorcycle/sidecar during the warranty period.

Owner's Obligations

To obtain warranty service, return your motorcycle/sidecar at your expense within the warranty period to an authorized dealer. Our dealer should be able to provide warranty service during normal business hours and as soon as possible, depending upon the workload of the dealer's service department and the availability of necessary parts.

Harley-Davidson Motor Company, P.O. Box 653, Milwaukee, Wisconsin 53201, U.S.A.

Exclusions

This warranty will not apply to any motorcycle/sidecar as follows:

1. Which has not been operated or maintained as specified in the Owner's Manual.
2. Which has been abused, misused, improperly stored, used "off the highway," or used for racing or competition of any kind.
3. Which is not manufactured to comply with the laws of the market in which it is registered.
4. Installing off-road or competition parts to enhance performance may void all or part of your new motorcycle warranty. See a Harley-Davidson dealer for details.
5. Acts of God, war, riot, insurrection, natural disasters, including, but not limited to, nuclear contamination, lightning, dust storms, hail storms, ice storms, earthquakes, floods, or for other circumstances out of Harley-Davidson's control.

Other Limitations

This warranty does not cover:

1. Parts and labor for normal maintenance as recommended in the Owner's Manual, or the replacement of parts due to normal wear and tear including such items as the following: tires, lubrication, oil and filter change, fuel system cleaning, battery maintenance, engine tune-up, spark plugs, brake, clutch and chain/belt adjustment (including chain replacement).
2. Cosmetic concerns that arise as a result of owner abuse, lack of proper maintenance or environmental conditions (except concerns that result from defects in material or workmanship, which are covered by this warranty for the duration of the warranty period).
3. Any cosmetic condition existing at the time of retail delivery that has not been documented by the selling dealer prior to retail delivery.
4. Defects or damage to the motorcycle caused by alterations outside of Harley-Davidson factory specifications.

Important: Read Carefully

---

1. Our dealers are independently owned and operated and may sell other products. Because of this, HARLEY-DAVIDSON IS NOT RESPONSIBLE FOR THE SAFETY, QUALITY, OR SUITABILITY OF ANY NON-HARLEY-DAVIDSON PART, ACCESSORY OR DESIGN MODIFICATION INCLUDING LABOR WHICH MAY BE SOLD AND/OR INSTALLED BY OUR DEALERS.
2. This warranty is a contract between you and the manufacturer. It is separate and apart from any warranty you may receive or purchase from the dealer. The dealer is not authorized to alter, modify, or in any way change the terms and conditions of this warranty.
3. Any warranty work or parts replacement authorized by the manufacturer will not preclude the manufacturer from later relying on any exclusion where applicable.

Limited Noise Warranty

2009 HARLEY-DAVIDSON MOTORCYCLE NOISE CONTROL SYSTEM LIMITED WARRANTY

The following warranty applies to the noise control system, is in addition to the MOTORCYCLE LIMITED WARRANTY and EMISSION CONTROL SYSTEM LIMITED WARRANTY, and applies only to motorcycles sold in the U.S.

Harley-Davidson Motor Company warrants that this vehicle is designed and built so as to conform at the time of sale with applicable regulations of the U.S. Environmental Protection Agency (as tested following F-76 Drive-By test procedure) and that it is free from defects in materials and workmanship which would cause this motorcycle not to meet U.S. Environmental Protection Agency Standards within 1 year or 3,730 miles (6,000 kilometers) whichever expires first. Any unexpired portion of this limited warranty will be transferred to subsequent owners, upon the resale of the motorcycle during the warranty period.

THERE IS NO OTHER EXPRESS WARRANTY (OTHER THAN THE SEPARATE MOTORCYCLE AND EMISSIONS WARRANTIES) ON THE MOTORCYCLE. ANY IMPLIED WARRANTY OF MERCHANTABILITY OR FITNESS FOR PARTICULAR PURPOSE IS LIMITED TO THE DURATION OF THIS WARRANTY.

Some states do not allow limitations on how long an implied warranty lasts, so the above limitation may not apply to you.

The warranty period shall begin on the date the motorcycle is delivered to the first retail purchaser or, if the motorcycle is placed in service as a demonstrator or company vehicle prior to sale at retail, on the date it is first placed in service.

THE FOLLOWING ITEMS ARE NOT COVERED BY THE NOISE CONTROL SYSTEM WARRANTY

1. Failures which arise as a result of misuse, alterations, or accident as specified in the Owner's Manual.
2. Replacing, removing, or modifying any portion of the NOISE CONTROL SYSTEM (consisting of the exhaust system and air intake/cleaner assembly) with parts not certified to be legal for street use.
3. Any motorcycle on which the odometer mileage has been changed so that the mileage cannot be determined.
4. TO THE FULLEST EXTENT ALLOWED BY LAW, HARLEY-DAVIDSON AND ITS DEALERS SHALL NOT BE LIABLE FOR LOSS OF USE, INCONVENIENCE, LOST TIME, COMMERCIAL LOSS OR OTHER INCIDENTAL OR CONSEQUENTIAL DAMAGES.

Some states do not allow the exclusion or limitation of incidental or consequential damages, so the above limitation or exclusion may not apply to you.

Other Rights

This warranty gives you specific legal rights, and you may have other rights which vary from state to state.

Recommendations for Required Maintenance

It is recommended that any noise system maintenance be performed by an authorized Harley-

Davidson dealer using genuine Harley-Davidson replacement parts. The maintenance, replacement or repair of the noise control system may be performed by any other qualified service outlet or individual. Non-genuine parts may be used only if such parts are certified to comply with U.S. Environmental Protection Agency Standards.

Harley-Davidson Motor Company, P.O. Box 653, Milwaukee, Wisconsin 53201, U.S.A.

Limited Emission Warranty

2009 HARLEY-DAVIDSON EMISSION CONTROL SYSTEM LIMITED WARRANTY

The following warranty applies to the emission control system, is in addition to the LIMITED MOTORCYCLE WARRANTY and NOISE CONTROL SYSTEM LIMITED WARRANTY, and applies only to motorcycles sold in the U.S.

Harley-Davidson Motor Company warrants that this vehicle is designed and built so as to conform at the time of sale with applicable regulations of the U.S. Federal Environmental Protection Agency, and that it is free from defects in materials and workmanship which would cause this motorcycle not to meet U.S. Environmental Protection Agency Standards within 5 years or 18,641 miles (30,000 kilometers) whichever expires first. Any unexpired portion of this limited warranty will be transferred to subsequent owners, upon the resale of the motorcycle during the warranty period.

THERE IS NO OTHER EXPRESS WARRANTY (OTHER THAN THE SEPARATE MOTORCYCLE AND NOISE WARRANTIES) ON THE MOTORCYCLE. ANY IMPLIED WARRANTY OF MERCHANTABILITY OR FITNESS FOR PARTICULAR PURPOSE IS LIMITED TO THE DURATION OF THIS WARRANTY.

Some states do not allow limitations on how long an implied warranty lasts, so the above limitation may not apply to you.

The warranty period shall begin on the date the motorcycle is delivered to the first retail purchaser or, if the motorcycle is placed in service as a demonstrator or company vehicle prior to sale at retail, on the date it is first placed in service.

THE FOLLOWING ITEMS ARE NOT COVERED BY THE EMISSION CONTROL SYSTEM WARRANTY

1. Failures which arise as a result of misuse, alterations, accident or non-performance of maintenance as specified in the Owner's Manual.

2. The replacement of parts (such as spark plugs, fuel and oil filters, etc.) used in required maintenance.

3. Any motorcycle on which the odometer mileage has been changed so that the mileage cannot be determined.

4. TO THE FULLEST EXTENT ALLOWED BY LAW, HARLEY-DAVIDSON AND ITS DEALERS SHALL NOT BE LIABLE FOR LOSS OF USE, INCONVENIENCE, LOST TIME, COMMERCIAL LOSS OR OTHER INCIDENTAL OR CONSEQUENTIAL DAMAGES.

Some states do not allow the exclusion or limitation of incidental or consequential damages, so the above limitation or exclusion may not apply to you.

Other Rights

This warranty gives you specific legal rights, and you may have other rights which vary from state to state.

Recommendations for Required Maintenance

It is recommended that any emission system maintenance be performed by an authorized Harley-Davidson dealer using genuine Harley-Davidson replacement parts. The maintenance, replacement or repair of the emissions control system may be performed by any other qualified service outlet or individual. Non-genuine parts may be used only if such parts are certified to comply with U.S. Environmental Protection Agency Standards.

Harley-Davidson Motor Company, P.O. Box 653, Milwaukee, Wisconsin 53201, U.S.A.

Maintenance Scheduling

Regular Service Intervals: Softail Models

Regular lubrication and maintenance will help keep your new Harley-Davidson operating at peak performance. Your Harley-Davidson dealer knows best how to service your motorcycle with factory approved methods and equipment assuring you of thorough and competent workmanship.

NOTES:

- *Refer to Regular Service Intervals: 2009 Softail Models. Regular maintenance interval operations are required to keep your new motorcycle warranty in force. The use of other than Harley-Davidson approved parts and service procedures may void the warranty. Any alterations to the emission system components, such as the carburetor and exhaust system, may be in violation of Federal and State laws.*
- *Refer to Owner's Maintenance Records: All Softail Models except Springers and Owner's Maintenance Records: All Softail Springers. When servicing your motorcycle, bring this owner's manual to the dealership and complete information needed in the blank columns listed.*

⚠WARNING

Perform the service and maintenance operations as indicated in the regular service interval table. Lack of regular maintenance at the recommended intervals can affect the safe operation of your motorcycle, which could result in death or serious injury. (00010a)

⚠WARNING

If you operate your motorcycle under adverse conditions (severe cold, extreme heat, very dusty environment, very bad roads, through standing water, etc.), you should perform the regular maintenance intervals more frequently to ensure the safe operation of your motorcycle. Failure to

maintain your motorcycle could result in death or serious injury. (00094a)

Regular Service Intervals: 2009 Softail Models

ITEM SERVICED	PROCEDURE	1000 MI. 1600 KM	5000 MI. 8000 KM	10,000 MI. 16,000 KM	15,000 MI. 24,000 KM	20,000 MI. 32,000 KM	25,000 MI. 40,000 KM	NOTES
Engine oil and filter	Replace	X	X	X	X	X	X	
Oil lines and brake system	Inspect for leaks	X	X	X	X	X	X	1
Air cleaner	Inspect, service as required	X	X	X	X	X	X	
Tires	Check pressure, inspect tread	X	X	X	X	X	X	
Wheel spokes	Check tightness	X	X			X		1, 4
Primary chaincase lubricant	Replace	X		X		X		
Transmission lubricant	Replace	X				X		
Clutch	Check adjustment	X	X	X	X	X	X	1
Rear belt and sprockets	Inspect, adjust belt	X	X	X	X	X	X	1
Throttle, brake, and clutch controls	Check, adjust and lubricate	X	X	X	X	X	X	1
Jiffy stand	Inspect and lubricate	X		X		X		1
Fuel lines and fittings	Inspect for leaks	X	X	X	X	X	X	1
Fuel filter in fuel tank	Replace						X	1
Brake fluid	Check levels and condition	X	X	X	X	X	X	6
Brake pads and discs	Inspect for wear	X	X	X	X	X	X	
Spark plugs	Inspect	X	X	X	X	X	X	
	Replace					X		
Electrical equipment and switches	Check operation	X	X	X	X	X	X	
Engine idle speed	Check adjustment	X	X	X	X	X	X	1
Front fork oil	Replace	Replace at 50,000 miles 80,000 kilometers .						1
Steering head bearings	Adjust	X		X		X		1
	Lubricate			X		X		2

(Softail models)	Lubricate			X		X		2
Steering head bearings (Springer models)	Adjust	Adjust and lubricate every 2500 miles 4000 kilometers .						1, 5
Windshield bushings	Inspect			X		X		1
Springer rocker bearings	Adjust	X		X		X		1, 7
Critical fasteners	Check tightness	X		X		X		1
Battery	Check battery and clean connections							3
Exhaust system	Inspect for leaks, cracks, and loose or missing fasteners or heat shields	X	X	X	X	X	X	3
Road test	Verify component and system functions	X	X	X	X	X	X	
NOTES:	1. Should be performed by an authorized Harley-Davidson dealer, unless you have the proper tools, service data and are mechanically qualified. 2. Disassemble, lubricate and inspect every 30,000 miles 48,000 kilometers . 3. Perform annually. 4. Not all vehicles are equipped with spoke wheels. Consult appropriate topic in service manual. 5. Disassemble, lubricate and inspect every 20,000 miles 32,000 kilometers . 6. Change D.O.T. 4 fluid and flush brake system every two years. 7. Adjust at 500 miles 800 kilometers .							

Owner's Maintenance Records: All Softail Models except Springers

SERVICE MILE INTERVAL	DATE	DEALER NUMBER	TECHNICIAN NAME	TECHNICIAN SIGNATURE
1000 mi (1600 km)				
5000 mi (8000 km)				
10,000 mi (16,000 km)				
15,000 mi (24,000 km)				
20,000 mi (32,000 km)				
25,000 mi (40,000 km)				
30,000 mi (48,000 km)				
35,000 mi (56,000 km)				
40,000 mi (64,000 km)				

40,000 mi (64,000 km)				
45,000 mi (72,000 km)				
50,000 mi (80,000 km)				

Owner's Maintenance Records: All Softail Springers

SERVICE MILE INTERVAL	DATE	DEALER NUMBER	TECHNICIAN NAME	TECHNICIAN SIGNATURE
500 mi 800 km				
1000 mi 1600 km				
2500 mi 4000 km				
5000 mi 8000 km				
7500 mi 12,000 km				
10,000 mi 16,000 km				
12,500 mi 20,000 km				
15,000 mi 24,000 km				
17,500 mi 28,000 km				
20,000 mi 32,000 km				
22,500 mi 36,000 km				
25,000 mi 40,000 km				
27,500 mi 44,000 km				
30,000 mi 48,000 km				
32,500 mi 52,000 km				
35,000 mi 56,000 km				
37,500 mi 60,000 km				
40,000 mi 64,000 km				
42,500 mi 68,000 km				
45,000 mi 72,000 km				
47,500 mi 76,000 km				
50,000 mi 80,000 km				

Service Literature

Refer to Service Literature: 2009 Softail Models. Visit any Harley-Davidson dealer or go to www.harley-davidson.com to purchase a service or parts manual for your motorcycle. Factory authorized manuals are the most complete and detailed source of information outside of your Harley-Davidson dealer.

Service Literature: 2009 Softail Models

DOCUMENT	LANGUAGE	PART NUMBER
Service Manual	English	99482-09

Service Manual	English	[illegible]
Electrical Diagnostics Manual	English	99498-09
Service and Electrical Diagnostics Manual	French	99482-09FR
Service and Electrical Diagnostics Manual	German	99482-09DE
Service and Electrical Diagnostics Manual	Spanish	99482-09ES
Service and Electrical Diagnostics Manual	Italian	99482-09IT
Parts Catalog	English	99455-09

H-D Michigan, Inc. Trademark Information

Harley, Harley-Davidson, H-D, Bar & Shield, Digital Tech, Digital Technician, Digital Technician II, Destroyer, Deuce, Dyna, Electra Glide, Evolution, Fat Boy, Glaze, Gloss, H-D, H-Dnet.com, HD, Harley, Heritage Softail, Heritage Springer, Low Rider, Night Rod, Night Train, Profile, Revolution, Road Glide, Road King, Rocker, Softail, Sportster, Sun Ray, Sunwash, Tech Link, Twin Cam 88, Twin Cam 88B, Twin Cam 96, Twin Cam 96B, Twin Cam 103, Twin Cam 103B, Twin Cam 110, Twin Cam 110B, Tour-Pak, Screamin' Eagle, Softail, Super Guide, Super Premium, SYN3, Ultra Glide, V-Rod, VRSC, Wide Glide, and Harley-Davidson Genuine Motor Parts and Genuine Motor Accessories are among the trademarks of H-D Michigan, Inc.

Product Registered Marks

Allen, Amp Multilock, Bluetooth, Brembo, Delphi, Deutsch, Dunlop, Dynojet, Fluke, G.E. Versilube, Gunk, Hydroseal, Hylomar, Kevlar, Lexan, Loctite, Lubriplate, Keps, K&N, Magnaflux, Marson Thread-Setter Tool Kit, MAXI fuse, Molex, MPZ, Mulitilock, Novus, Packard, Pirelli, Permatex, Philips, PJ1, Pozidriv, Robinair, S100, Sems, Snap-on, Teflon, Threadlocker, Torca, Torco, TORX, Tufoil, Tyco, Ultratorch, Velcro, X-Acto, and XM Satellite Radio are among the trademarks of their respective owners.