Safety First

Safe Operating Rules: Softail Models

Before operating your new motorcycle it is your responsibility to read and follow the operating and maintenance instructions in this manual, and follow these basic rules for your personal safety.

- Know and respect the rules of the road (see RULES OF THE ROAD section). Carefully read and observe the rules contained in the RIDING TIPS booklet accompanying this Owner's Manual. Read and familiarize yourself with the contents of the MOTORCYCLE HANDBOOK for your state.
- Before starting engine, check for proper operation of brake, clutch, shifter, throttle controls, correct fuel and oil supply.

⚠WARNING

Do not use aftermarket parts and custom made front forks which can adversely affect performance and handling. Removing or altering factory installed parts can adversely affect performance and could result in death or serious injury. (00001a)

- Use only Harley-Davidson approved parts and accessories. Use of certain other manufacturer's performance parts will void your new motorcycle warranty. See your Harley-Davidson dealer for details.

⚠WARNING

Stop the engine when refueling or servicing the fuel system. Do not smoke or allow open flame or sparks near gasoline. Gasoline is extremely flammable and highly explosive, which could result in death or serious injury. (00002a)

When refueling your motorcycle, the following rules should be observed.

- Refuel in a well ventilated area with the engine turned off.
- Remove fuel filler cap slowly.
- Do not smoke or allow open flames or sparks when refueling or servicing the fuel system.
- Always close the fuel supply valve when the engine is not running. This prevents flooding of the carburetor and the surrounding area with gasoline.
- Do not fill fuel tank above the bottom of the filler neck insert.
- Leave air space to allow for fuel expansion.

⚠WARNING

Do not store motorcycle with gasoline in tank within the home or garage where open flames, pilot lights, sparks or

electric motors are present. Gasoline is extremely flammable and highly explosive, which could result in death or serious injury. (00003a)

⚠WARNING

Engine exhaust from this product contains chemicals known to the State of California to cause cancer and birth defects or other reproductive harm. (00004e)

⚠WARNING

Do not run motorcycle in a closed garage or confined area. Inhaling motorcycle exhaust, which contains poisonous carbon monoxide gas, could result in death or serious injury. (00005a)

⚠WARNING

The jiffy stand locks when placed in the full forward (down) position with vehicle weight on it. If the jiffy stand is not in the full forward (down) position with vehicle weight on it, the vehicle can fall over which could result in death or serious injury. (00006a)

⚠WARNING

Be sure jiffy stand is fully retracted before riding. If jiffy stand is not fully retracted, it can contact the road surface causing a loss of vehicle control, which could result in death or serious injury. (00007a)

- A new motorcycle must be operated according to the special break-in procedure. See Break-in Riding Rules.
- Operate motorcycle only at moderate speed and out of traffic until you have become thoroughly familiar with its operation and handling characteristics under all conditions.

NOTE:

We recommend that you obtain information and formal training in the correct motorcycle riding technique. The Motorcycle Safety Foundation® offers beginning and advanced rider safety courses. Call (949)727-3227 for information.

⚠WARNING

Travel at speeds appropriate for road and conditions and never travel faster than posted speed limit. Excessive speed can cause loss of vehicle control, which could result in death or serious injury. (00008a)

- Do not exceed the legal speed limit or drive too fast for existing conditions. Always reduce

speed when poor driving conditions exist. High speed increases the influence of any other condition affecting stability and increases the possibility of loss of control.

- Pay strict attention to road surfaces and wind conditions. Any two wheeled vehicle may be subject to upsetting forces such as wind blasts from passing trucks, holes in the pavement, rough road surfaces, rider control error, etc. These forces may influence the handling characteristics of your motorcycle. If this happens, reduce speed and guide the motorcycle with a relaxed grip to a controlled condition. Do not brake abruptly or force the handlebar. This may aggravate an unstable condition.
- Keep cargo weight concentrated close to the motorcycle and as low as possible to minimize the change in the motorcycle's center of gravity. Distribute weight evenly on both sides of the vehicle and do not load bulky items too far behind the rider or add weight to the handlebars or front forks. Do not exceed maximum specified load in each saddlebag.

NOTE:

New riders should gain experience under various conditions while driving at moderate speeds.

- Operate your motorcycle defensively. Remember, a motorcycle does not afford the same protection as an automobile in an accident. One of the most common accident situations occurs when the driver of the other vehicle fails to see or recognize a motorcycle and turns left into the on-coming motorcyclist. Operate only with headlamp on.
- Wear an approved helmet, clothing, and foot gear suited for motorcycle riding. Bright or light colors are best for greater visibility in traffic, especially at night. Avoid loose, flowing garments and scarves.

⚠WARNING

Avoid contact with exhaust system and wear protective clothing that completely covers legs while riding. Exhaust pipes and mufflers get very hot when engine is running and remain too hot to touch, even after engine is turned off. Failure to wear protective clothing could result in burns or other serious injury. (00009a)

- When carrying passengers, it is your responsibility to instruct them on proper riding procedures. (See Riding Tips booklet included in your Harley-Davidson Owner's Kit.)

- Do not allow other individuals, under any circumstances, to operate your motorcycle unless you know they are experienced, licensed riders and are thoroughly familiar with the operation of your particular motorcycle.

- Protect your motorcycle against theft. After parking your motorcycle, lock the steering head and remove ignition key from switch. Set security alarm if present.
- Safe motorcycle operation requires alert mental judgment combined with a defensive driving attitude. Do not allow fatigue, alcohol or drugs to endanger your safety or that of others.
- Vehicles equipped with a sound system should have the volume adjusted to a nondistracting level before operating vehicle.
- Maintain your motorcycle in proper operating condition in accordance with Regular Service Intervals: 2005 Softail Models. Particularly important to motorcycle stability is proper tire inflation pressure, tread condition, and proper adjustment of wheel bearings and steering head bearings.

⚠WARNING

Do not operate vehicle with forks locked. Locking the forks

Do not operate vehicle with forks locked. Locking the forks restricts the vehicle's turning ability, which could result in death or serious injury. (00035a)

⚠WARNING

Perform the service and maintenance operations as indicated in the regular service interval table. Lack of regular maintenance at the recommended intervals can affect the safe operation of your motorcycle, which could result in death or serious injury. (00010a)

⚠WARNING

Do not operate motorcycle with loose, worn or damaged steering or suspension systems. Contact a Harley-Davidson dealer for repairs. Loose, worn or damaged steering or suspension components can adversely affect stability and handling, which could result in death or serious injury. (00011a)

⚠WARNING

Regularly inspect shock absorbers and front forks. Replace leaking, damaged or worn parts that can adversely affect stability and handling, which could result in death or serious injury. (00012a)

⚠WARNING

Use Harley-Davidson replacement fasteners. Aftermarket fasteners can adversely affect performance, which could result in death or serious injury. (00013a)

- See Harley-Davidson service manual for proper torque values.
- Aftermarket fasteners may not have the specific property requirements to perform properly.

CAUTION

Twin Cam 88B Harley-Davidson motorcycles have a plugged carburetor overflow fitting. The fuel supply valve on the vehicle should be turned off when the vehicle is not operating. Failure to do so may result in fuel drainage into the engine, dilution of the engine oil and engine damage. (00143a)

⚠WARNING

Be sure tires are properly inflated, balanced and have adequate tread. Inspect your tires regularly and see a

Harley-Davidson dealer for replacements. Riding with excessively worn, unbalanced or under-inflated tires can adversely affect stability and handling, which could result in death or serious injury. (00014a)

⚠WARNING

Replace punctured or damaged tires. In some cases, small punctures in the tread area may be repaired from within the demounted tire by a Harley-Davidson dealer. Speed should NOT exceed 50 mph (80 km/h) for the first 24 hours after repair, and the repaired tire should NEVER be used over 80 mph (130 km/h). Failure to follow this warning could result in death or serious injury. (00015a)

⚠WARNING

Do not exceed the motorcycle Gross Vehicle Weight Rating (GVWR). Exceeding the GVWR can affect stability and handling, which could result in death or serious injury. (00016a)

- GVWR is the sum of the weight of the motorcycle, accessories, and the maximum weight of the rider, passenger and cargo that can be safely carried.
- The GVWR is shown on the information plate, located on the frame down tubes.

⚠WARNING

Do not tow a disabled motorcycle. Towing can adversely affect stability and handling, which could result in death or serious injury. (00017a)

⚠WARNING

Do not pull a trailer with a motorcycle. Pulling a trailer can cause tire overload, reduced braking efficiency and adversely affect stability and handling, which could result in death or serious injury. (00018b)

⚠CAUTION

Direct contact of D.O.T. 5 brake fluid with eyes can cause eye irritation, swelling, and redness. Avoid eye contact. In case of eye contact flush with large amounts of water and get medical attention. Swallowing large amounts of D.O.T. 5 brake fluid can cause digestive discomfort. If swallowed, obtain medical attention. Use in well ventilated area. KEEP OUT OF REACH OF CHILDREN. (00144a)

⚠WARNING

Batteries, battery posts, terminals and related accessories contain lead and lead compounds, and other chemicals known to the State of California to cause cancer and birth defects or other reproductive harm. Wash hands after handling. (00019d)

⚠WARNING

Wheel weights on wheels without spokes contain lead and lead compounds, chemicals known to the State of California to cause cancer and birth defects or other reproductive harm. (00356b)

⚠WARNING

Consult a Harley-Davidson dealer regarding any questions or problems that occur in the operation of your motorcycle. Failure to do so can aggravate an initial problem, cause costly repairs, cause an accident and could result in death or serious injury. (00020a)

- Be sure all equipment required by federal, state and local law is installed and in good operating condition.

Rules of the Road

- Keep to the right side of the road centerline when meeting other vehicles coming in the opposite direction. Ride to left of center of your lane to avoid oily pavement ahead.
- Always sound your horn, actuate your turn signals, and exercise caution when passing other vehicles going in the same direction. Never try to pass another vehicle going in the same direction at street intersections, on curves, or when going up or down a hill.
- At street intersections give the right-of-way to the vehicle on your right. Do not presume you have the right-of-way, as the other driver may not know it is your turn.
- Always signal when preparing to stop, turn or pass.
- All traffic signs, including those used for the control of traffic at intersections, should be obeyed promptly. SLOW DOWN signs near schools and CAUTION signs at railroad crossings should always be observed and your actions governed accordingly.
- When intending to turn to the left, signal at least 100 feet (30.5 meters) before reaching the turning point. Move over to the centerline of the street (unless local rules require otherwise), slow down, enter the intersection of the street and then turn carefully to the left.
- Never anticipate a traffic light. When a change is indicated from GO to STOP (or vice versa) in the traffic control systems at intersections, slow down and wait for the light to change. Never run through a yellow or red traffic light.
- While turning either right or left, watch for pedestrians, animals, as well as vehicles.
- Do not leave the curb or parking area without signaling. Be sure your way is clear to enter moving traffic. A moving line of traffic always has the right-of-way.
- Be sure your license plate is installed in the position specified by law and is clearly visible at all times. Keep the plate clean.
- Ride at a safe speed that is consistent with the type of highway you are on. Pay strict attention to whether the road is dry, oily, icy or wet.
- Watch for debris such as leaves or loose gravel.
- Weather and traffic conditions on the highway dictate adjusting your speed and driving

habits accordingly.

Accessories and Cargo

Harley-Davidson Motor Company cannot test and make specific recommendations concerning every accessory or combination of accessories sold. Therefore, the rider must be responsible for safe operation of the motorcycle when installing accessories or carrying additional weight.

⚠WARNING

See the Accessory and Cargo section in your Owner's Manual. Improper loading of cargo or installation of accessories can affect motorcycle stability and handling, which could result in death or serious injury. (00021a)

⚠WARNING

Do not exceed the motorcycle Gross Vehicle Weight Rating (GVWR). Exceeding the GVWR can affect stability and handling, which could result in death or serious injury. (00016a)

- GVWR is the sum of the weight of the motorcycle, accessories, and the maximum weight of the rider, passenger and cargo that can be safely carried.
- The GVWR is shown on the information plate which is located on the frame down tube.

⚠WARNING

Do not pull a trailer with a motorcycle. Pulling a trailer can cause tire overload, reduced braking efficiency and adversely affect stability and handling, which could result in death or serious injury. (00018b)

Accessory and Cargo Guidelines

The following guidelines should be used when equipping a motorcycle, carrying passengers and/or cargo.

⚠WARNING

Travel at speeds appropriate for road and conditions and never travel faster than posted speed limit. Excessive speed can cause loss of vehicle control, which could result in death or serious injury. (00008a)

- Do not exceed the legal speed limit or drive too fast for existing conditions. Always reduce speed when poor driving conditions exist. High speed increases the influence of any other condition affecting stability and increases the possibility of loss of control.
- Pay strict attention to road surfaces and wind conditions. Any two wheeled vehicle may be

subject to upsetting forces such as wind blasts from passing trucks, holes in the pavement, rough road surfaces, rider control error, etc. These forces may influence the handling characteristics of your motorcycle. If this happens, reduce speed and guide the motorcycle with a relaxed grip to a controlled condition. Do not brake abruptly or force the handlebar. This may aggravate an unstable condition.

- Keep cargo weight concentrated close to the motorcycle and as low as possible. This minimizes the change in the motorcycle's center of gravity.
- Distribute weight evenly on both sides of the vehicle.
- Do not load bulky items too far behind the rider or add weight to the handlebars or front forks.
- Do not exceed maximum specified load in each saddlebag.
- Luggage racks are designed for lightweight items. Do not overload racks.
- Be sure cargo is secure and will not shift while riding and recheck the cargo periodically. Accessories that change the operator's riding position may increase reaction time and affect handling of the motorcycle.
- Additional electrical equipment may overload the motorcycle's electrical system possibly resulting in electrical system and/or component failure.

⚠WARNING

The front and/or rear guard(s) can provide limited leg and cosmetic vehicle protection under unique circumstances. (Fall over while stopped, very slow speed slide.) It is not made or intended to provide protection from bodily injury in a collision with another vehicle or any other object. (00022a)

Large surfaces such as fairings, windshields, back rests, and luggage racks can adversely affect handling. Only genuine Harley-Davidson items designed specifically for the motorcycle model should be used with proper installation.

⚠WARNING

Do not use aftermarket parts and custom made front forks which can adversely affect performance and handling. Removing or altering factory installed parts can adversely affect performance and could result in death or serious injury. (00001a)

⚠WARNING

Only Touring Harley-Davidson Motorcycles are suitable for sidecar use. Consult a Harley-Davidson dealer. Use of motorcycles other than Touring models with sidecars could result in death or serious injury. (00040a)

Identification

2005 Softail Models

This section provides left and right side views of your 2005 Softail motorcycle. Please refer to the CONTROLS AND INDICATORS and OPERATION sections for specific details about each component.

NOTE:

Specifications in this publication may not match those of official certification in some markets due to timing of publication printing, variance in testing methods, and/or vehicle differences. Customers seeking officially recognized regulatory specifications for their vehicle should refer to certification documents and/or contact their respective dealer or distributor.

1. Enrichener knob (carbureted only)
2. Fuel supply valve (carbureted only)
3. Clutch inspection cover
4. Primary chain inspection cover
5. Engine oil filter
6. Fuel gauge

2005 Softail Deluxe (FLSTN) - Left Side

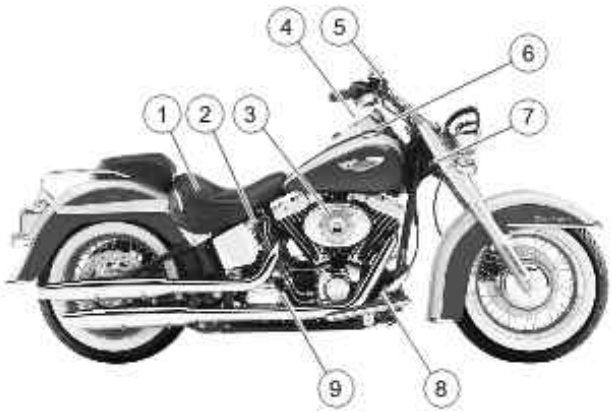

1. Battery (under seat)
2. Engine oil fill plug and dipstick
3. Air cleaner
4. Speedometer and indicators
5. Front brake master cylinder and reservoir
6. Fuel filler cap
7. Fork lock
8. Rear brake master cylinder and reservoir
9. Transmission fill plug

2005 Softail Deluxe (FLSTN) - Right Side

1. Enrichener knob (carbureted only)
2. Fuel supply valve (carbureted only)
3. Clutch inspection cover
4. Primary chain inspection cover
5. Engine oil filter
6. Fuel gauge

2005 Springer Classic (FLSTSC) - Left Side

1. Battery (under seat)
2. Engine oil fill plug and dipstick
3. Air cleaner
4. Speedometer and indicators
5. Front brake master cylinder and reservoir
6. Fuel filler cap
7. Fork lock
8. Rear brake master cylinder and reservoir
9. Transmission fill plug

2005 Springer Classic (FLSTSC) - Right Side

1. Enrichener knob (carbureted only)
2. Fuel supply valve (carbureted only)
3. Clutch inspection cover
4. Primary chain inspection cover
5. Engine oil filter
6. Fuel gauge

2005 Heritage Softail Classic (FLSTC) - Left Side View

1. Battery (under seat)
2. Engine oil fill plug and dipstick
3. Air cleaner
4. Speedometer and indicators
5. Front brake master cylinder and reservoir
6. Fuel filler cap
7. Fork lock
8. Rear brake master cylinder and reservoir
9. Transmission fill plug

2005 Heritage Softail Classic (FLSTC) - Right Side View

1. Enrichener knob (carbureted only)
2. Fuel supply valve (carbureted only)
3. Clutch inspection cover
4. Primary chain inspection cover
5. Engine oil filter
6. Fuel gauge

2005 Fat Boy (FLSTF) - Left Side

1. Battery (under seat)
2. Engine oil fill plug and dipstick
3. Air cleaner
4. Speedometer and indicators
5. Front brake master cylinder and reservoir
6. Fuel filler cap
7. Fork lock
8. Rear brake master cylinder and reservoir
9. Transmission fill plug

2005 Fat Boy (FLSTF) - Right Side

1. Enrichener knob (carbureted only)
2. Fuel supply valve (carbureted only)
3. Clutch inspection cover
4. Primary chain inspection cover
5. Engine oil filter
6. Fuel gauge

2005 Softail Deuce (FXSTD) - Left Side

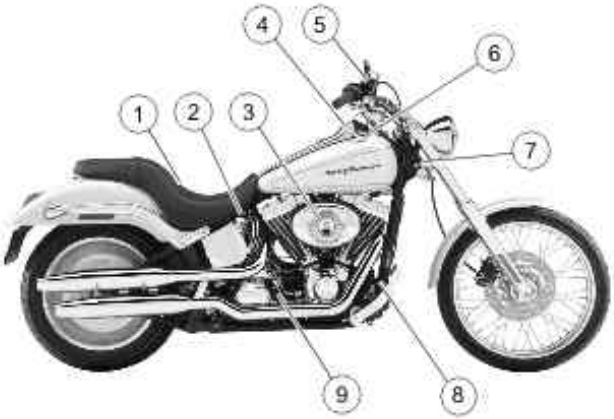

1. Battery (under seat)
2. Engine oil fill plug and dipstick
3. Air cleaner
4. Speedometer and indicators
5. Front brake master cylinder and reservoir
6. Fuel filler cap
7. Fork lock
8. Rear brake master cylinder and reservoir
9. Transmission fill plug

2005 Softail Deuce (FXSTD) - Right Side

1. Enrichener knob (carbureted only)
2. Fuel supply valve (carbureted only)
3. Clutch inspection cover
4. Primary chain inspection cover
5. Engine oil filter
6. Fuel gauge

2005 Springer Softail (FXSTS) - Left Side

1. Battery (under seat)
2. Engine oil fill plug and dipstick
3. Air cleaner
4. Speedometer and indicators
5. Front brake master cylinder and reservoir
6. Fuel filler cap
7. Fork lock
8. Rear brake master cylinder and reservoir
9. Transmission fill plug

2005 Springer Softail (FXSTS) - Right Side

1. Enrichener knob (carbureted only)
2. Fuel supply valve (carbureted only)
3. Clutch inspection cover
4. Primary chain inspection cover
5. Engine oil filter
6. Fuel gauge

2005 Softail Standard (FXST) - Left Side

1. Battery (under seat)
2. Engine oil fill plug and dipstick
3. Air cleaner
4. Speedometer and indicators
5. Front brake master cylinder and reservoir
6. Fuel filler cap
7. Fork lock
8. Rear brake master cylinder and reservoir
9. Transmission fill plug

2005 Softail Standard (FXST) - Right Side

1. Enrichener knob (carbureted only)
2. Fuel supply valve (carbureted only)
3. Clutch inspection cover
4. Primary chain inspection cover
5. Engine oil filter
6. Fuel gauge

2005 Night Train (FXSTB) - Left Side

1. Battery (under seat)
2. Engine oil fill plug and dipstick
3. Air cleaner
4. Speedometer and indicators
5. Front brake master cylinder and reservoir
6. Fuel filler cap
7. Fork lock
8. Rear brake master cylinder and reservoir
9. Transmission fill plug

2005 Night Train (FXSTB) - Right Side

Vehicle Identification Number

See V.I.N. Stamping Location. The full 17 digit serial or Vehicle Identification Number (V.I.N.) is stamped on the steering head and on a label located on the right front frame down tube.

An abbreviated V.I.N. is stamped on the left side crankcase at the base of the rear cylinder.

NOTE:

Always give the full 17 digit Vehicle Identification Number when ordering parts or making any inquiry about your motorcycle.

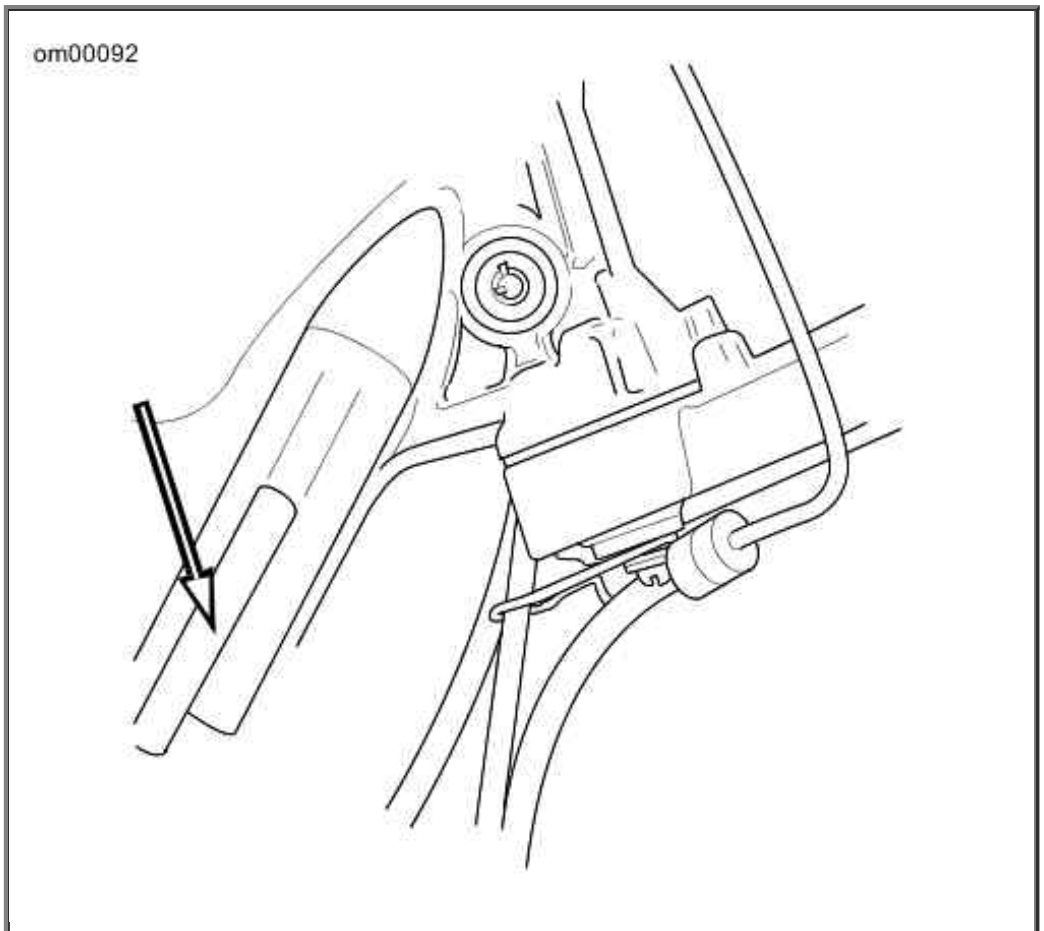

V.I.N. Stamping Location

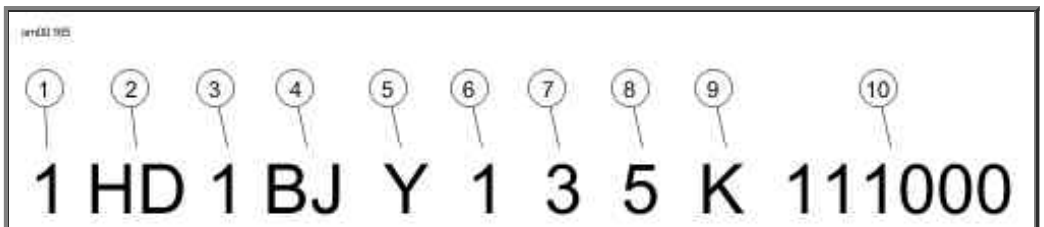

1. Market designation (1 character)
2. Manufacturer (2 characters)
3. Motorcycle type (1 character)
4. Model (2 characters)
5. Engine type (1 character)
6. Introduction date (1 character)
7. V.I.N. check digit (1 character)
8. Model year (1 character)
9. Assembly plant (1 character)
10. Sequential number (6 characters)

Typical Harley-Davidson Vehicle Identification Number

2005 Harley-Davidson Softail V.I.N. Breakdown

POSITION	DESCRIPTION	POSSIBLE VALUES
1	Market designation	1=Domestic 5=International
2	Manufacturer	HD=Harley-Davidson
3	Motorcycle type	1=Heavyweight motorcycle
4	Model	see model V.I.N. table
5	Engine type	Y=1450cc carbureted, balanced B=1450cc fuel injected, balanced
6	Introduction date	varies
7	V.I.N. check digit	Can be 0-9 or X
8	Model year	5=2005
9	Assembly plant	Y=York, PA K=Kansas City, MO
10	Sequential number	varies

2005 Softail V.I.N. Model Codes

CODE	MODEL	CODE	MODEL	CODE	MODEL
BH	FXST	BT	FXSTB	BZ	FXSTSI
BJ	FLSTC	BN	FLSTN	BX	FLSTFI
BL	FXSTS	BR	FLSTSC	JB	FXSTDI
BM	FLSTF	BV	FXSTI	JA	FXSTBI
BS	FXSTD	BW	FLSTCI	JD	FLSTNI
BY	FLSTSCI	GB	FLSTFI Shrine	HB	FLSTCI Shrine

Specifications

Specifications: 2005 Softail Models

Engine: 2005 Twin Cam Models

ITEM	SPECIFICATION	
Number of cylinders	2	
Type	4-cycle, 45 degree V-Type, air cooled	
Compression ratio	8.9-1	
Bore	3.75 in.	95.18 mm
Stroke	4.00 in.	101.52 mm
Displacement	88 cu. in.	1450 cc
Torque	85.0 ft-lbs @ 3000 RPM	115.0 Nm @ 3000 RPM

Ignition System: 2005 Twin Cam Models

COMPONENT	SPECIFICATION	
Ignition timing	not adjustable	
Battery	12 volt, 19 amp/hr, sealed and maintenance free	
Spark plug type	HD-6R12	
Spark plug size	12 mm	
Spark plug gap	0.038-0.043 in.	0.97-1.09 mm
Spark plug torque	12-18 ft-lbs	16.3-24.4 Nm

Transmission Specifications

TRANSMISSION	SPECIFICATION
Type	Constant mesh, foot shift
Speeds	5 forward

Sprocket Teeth: 2005 Softail Models

DRIVE	ITEM	NUMBER OF TEETH
Primary	Engine	25
	Clutch	36
Final	Transmission	32
	Rear wheel	70

Gear Ratios: 2005 Softail Models

GEAR	RATIO
1st Gear	10.110
2nd Gear	6.958
3rd Gear	4.953
4th Gear	3.862
5th Gear	3.150

NOTE:

Gross Vehicle Weight Rating (GVWR) (maximum allowable loaded vehicle weight) and corresponding Gross Axle Weight Ratings (GAWR) are given on a label located on the frame below the steering head.

Weights: 2005 FLSTC, FLSTF, FLSTSC and FLSTN

ITEM	FLSTC		FLSTF		FLSTSC		FLSTN	
	LB.	KG	LB.	KG	LB.	KG	LB.	KG
Weight as shipped from factory	696	316	666	302	731	332	676	307
GVWR	1160	527	1160	527	1160	527	1160	527
GAWR front	430	195	430	195	430	195	430	195
GAWR rear	730	331	730	331	730	331	730	331

Weights: 2005 FXST, FXSTD, FXSTB and FXSTS

ITEM	FXST		FXSTD		FXSTB		FXSTS	
	LB.	KG	LB.	KG	LB.	KG	LB.	KG
Weight as shipped from factory	629	286	645	293	630	286	653	296
GVWR	1125	511	1125	511	1125	511	1125	511
GAWR front	415	188	415	188	415	188	415	188
GAWR rear	710	322	710	322	710	322	710	322

Dimensions: 2005 FLSTC, FLSTF, FLSTSC and FLSTN

ITEM	FLSTC		FLSTF		FLSTSC		FLSTN	
	IN.	MM	IN.	MM	IN.	MM	IN.	MM
Wheel base	64.5	1638.3	64.5	1638.3	64.5	1638.3	64.5	1638.3
Overall length	94.5	2400.3	94.3	2395.2	94.5	2400.3	94.7	2405.4
Overall width	37.5	952.5	40.2	1021.1	32.7	829.6	38.4	975.4
Road clearance	5.1	129.5	5.1	129.5	4.9	124.9	4.8	121.9
Overall height	57.8	1468.1	44.5	1130.3	43.6	1106.7	43.5	1104.9
Saddle height	25.4	645.2	25.4	645.2	25.9	657.9	24.5	622.3

Dimensions: 2005 FXST, FXSTD, FXSTB and FXSTS

ITEM	FXST		FXSTD		FXSTB		FXSTS	
	IN.	MM	IN.	MM	IN.	MM	IN.	MM
Wheel base	66.9	1699.3	66.6	1691.6	66.9	1699.3	65.4	1661.2
Overall length	95.0	2413.0	95.4	2423.2	95.0	2413.0	93.5	2374.9
Overall width	37.9	962.7	35.9	911.9	30.9	784.9	32.7	830.6
Road clearance	5.6	142.2	5.6	142.2	5.6	142.2	5.4	137.2
Overall height	46.4	1178.6	46.4	1178.6	44.9	1140.5	46.4	1178.6
Saddle height	26.1	662.9	26.0	660.4	25.2	640.1	25.2	640.1

Capacities: 2005 Softail Models

ITEM	ALL BUT FXSTD MODELS		FXSTD MODELS	
	U.S.	LITERS	U.S.	LITERS
Fuel tank (total)	5.0 gal	18.9	4.9 gal	18.5
Fuel tank reserve (carbureted only)	0.5 gal	1.9	0.5 gal	1.9
Oil tank with filter	3.5 qt.	3.3	3.5 qt.	3.3
Transmission (approximate)	24 oz.	0.71	24 oz.	0.71
Primary chaincase (approximate)	26 oz.	0.77	26 oz.	0.77

Tire Pressures: 2005 Softail Models

MODEL	LOAD	TIRE PRESSURE (COLD)			
		FRONT		REAR	
		PSI	kPa	PSI	kPa
FLSTC, FLSTF, FLSTN, FLSTSC	solo rider	36	248	36	248
	rider and passenger	36	248	40	276
FXSTS, FXSTB, FXSTD, FXST	solo rider	30	207	36	248
	rider and passenger	30	207	40	276
2005 vehicles use Dunlop Harley-Davidson tires only.					

Tire Sizes: 2005 Softail Models

MODEL	MOUNT	SIZE	NUMBER
FLSTC, FLSTF, FLSTSC	front	16 in.	D402F MT90B16
FLSTN	front	16 in.	D402F WW MT90-16
FXSTS, FXSTB, FXSTD, FXST	front	21 in.	D402F MH90-21
FLSTC, FXSTB, FLSTF, FXSTS, FXST, FLSTSC	rear	16 in.	D401 150/80B16
FXSTD	rear	17 in.	K591 160/70B17
FLSTN	rear	16 in.	D402 WW MU85B16

Bulb Chart: 2005 Softail Models

LAMP	DESCRIPTION (ALL LAMPS 12 VOLT)	BULBS REQUIRED	CURRENT DRAW (AMPERAGE)		HARLEY-DAVIDSON PART NUMBER	
			FL MODELS	FX MODELS	FL MODELS	FX MODELS
Headlamp	high beam/low beam	1	4.7	4.3	68329-03	68329-03
	position lamp international	1	0.32		53436-97	
Tail and stop lamp	tail lamp	1	0.59		68167-88	
	stop lamp	1	2.10		68167-88	
	tail lamp international	1	0.59		68167-88	
	stop lamp international	1	2.10		68167-88	
Turn signal lamp	front/running	2	2.25	0.59	68168-89	
	front international	2	1.75		68163-84	
	rear	2	2.25		68572-64B	
	rear international	2	1.75		68163-84	
Auxiliary lamps	FLSTC/FLSTN	2	2.50		68351-05	
	Fog lamp international	2	2.92		68847-98	
License plate lamp	FXSTD	1	0.37		53436-97	
Fender tip lamp	FLSTC	2	0.10		68193-95	
Instrument panel lamps	Illuminated with LEDs. Replace entire assembly upon failure.					

Tire Data

⚠WARNING

Match tires, tubes, air valves and caps to the correct wheel rim. Contact a Harley-Davidson dealer. Mismatching can result in damage to the tire bead, allow tire slippage on the rim or cause tire failure, which could result in death or serious injury. (00023a)

⚠WARNING

Use only Harley-Davidson approved tires. See a Harley-

Davidson dealer. Using non-approved tires can adversely affect stability, which could result in death or serious injury. (00024a)

Tubeless tires fitted with the correct size inner tubes may be used on all Harley-Davidson laced (wire spoked) wheels. Protective rubber rim strips must be used with tubeless tires (fitted with correct size inner tubes) when mounted on laced (wire spoked) wheels.

⚠WARNING

Use inner tubes on laced (wire spoked) wheels. Using tubeless tires on laced wheels can cause air leaks, which could result in death or serious injury. (00025a)

Tubeless tires are used on all Harley-Davidson cast and disc wheels.

Tire sizes are molded on the tire sidewall. Inner tube sizes are printed on the tube.

⚠WARNING

Harley-Davidson front and rear tires are not the same. Interchanging front and rear tires can cause tire failure, which could result in death or serious injury. (00026a)

⚠WARNING

Do not inflate tire beyond maximum pressure as specified on sidewall. Over inflated tires can blow out, which could result in death or serious injury. (00027a)

⚠WARNING

Harley-Davidson tires are equipped with wear bars that run horizontally across the tread. When wear bars become visible and only 1/32 in. (0.8 mm) tread depth remains, replace tire immediately. Using a worn tire can adversely affect stability and handling, which could result in death or serious injury. Use only Dunlop Harley-Davidson replacement tires. (00090a)

See Specifications: 2005 Softail Models for tire pressures and sizes.

Gasoline Blends

Your motorcycle was designed to get the best performance and efficiency using unleaded gasoline. Most gasoline is blended with alcohol and/or ether to create oxygenated blends. The type and amount of alcohol or ether added to the fuel is important.

CAUTION

Do not use gasoline that contains methanol. Doing so can result in fuel system component failure, engine damage and/or equipment malfunction. (00148a)

- Gasoline containing METHYL TERTIARY BUTYL ETHER (MTBE): Gasoline/MTBE blends are a mixture of gasoline and as much as 15% MTBE. Gasoline/MTBE blends can be used in your motorcycle.
- ETHANOL is a mixture of 10% ethanol (Grain alcohol) and 90% unleaded gasoline. Gasoline/ethanol blends can be used in your motorcycle if the ethanol content does **not** exceed 10%.
- REFORMULATED OR OXYGENATED GASOLINES (RFG): Reformulated gasoline is a term used to describe gasoline blends that are specifically designed to burn cleaner than other types of gasoline, leaving fewer tailpipe emissions. They are also formulated to evaporate less when you are filling your tank. Reformulated gasolines use additives to oxygenate the gas. Your motorcycle will run normally using this type of gas and Harley-Davidson recommends you use it when possible, as an aid to cleaner air in our environment.

You may find that some gasoline blends adversely affect the starting, driveability or fuel efficiency of your motorcycle. If you experience one or more of these problems, it is recommended you operate your motorcycle on straight unleaded gasoline.

Fuel

Refer to Octane Ratings. Always use a good quality unleaded gasoline. Octane ratings are usually found on the pump.

⚠WARNING

Avoid spills. Slowly remove filler cap. Do not fill above bottom of filler neck insert, leaving air space for fuel expansion. Secure filler cap after refueling. Gasoline is extremely flammable and highly explosive, which could result in death or serious injury. (00028a)

⚠WARNING

Use care when refueling. Pressurized air in fuel tank can force gasoline to escape through filler tube. Gasoline is extremely flammable and highly explosive, which could result in death or serious injury. (00029a)

Modern service station pumps dispense a high flow of gasoline into a motorcycle fuel tank making air entrapment and pressurization a possibility.

Octane Ratings

SPECIFICATION	RATING
Pump Octane (R+M)/2	91 (95 RON)

Catalytic Converters

California and all international motorcycles are equipped with catalytic converters.

CAUTION

Do not operate catalytic converter-equipped vehicle with engine misfire or a non-firing cylinder. If you operate the vehicle under these conditions, the exhaust will become abnormally hot, which can cause vehicle damage, including emission control loss. (00149a)

CAUTION

Use only unleaded fuel in catalytic converter-equipped motorcycles. Using leaded fuel will damage the emission control system. (00150b)

Controls and Indicators

General: Controls and Indicators

⚠WARNING

Read the CONTROLS AND INDICATORS section before riding your motorcycle. Failure to understand the operation of the motorcycle could result in death or serious injury. (00043a)

Some features explained are unique to certain models. These features may be available as accessories for your Harley-Davidson motorcycle. See a Harley-Davidson dealer for a complete list of accessories that will fit your specific motorcycle.

Refer to the side view photographs in the front of the manual to locate the items discussed in this section. See 2005 Softail Models.

Ignition/Headlamp Key Switch: Softail Models

⚠WARNING

The automatic-on headlamp feature provides increased visibility of the rider to other motorists. Be sure headlamp is on at all times. Poor visibility of rider to other motorists can result in death or serious injury. (00030b)

Refer to Ignition/Headlamp Switch Positions: 2005 Softail Models. The ignition/headlamp key switch controls electrical functions of the motorcycle.

See the YOUR OWNER'S MANUAL section at the front of this book. Be sure to record all your key numbers in the space provided.

CAUTION

Protect your vehicle against theft. After parking your motorcycle, lock the steering head and remove ignition key from switch. Failure to lock your motorcycle may result in theft and/or equipment damage. (00151a)

⚠WARNING

Do not operate vehicle with forks locked. Locking the forks restricts the vehicle's turning ability, which could result in death or serious injury. (00035a)

CAUTION

Do not lubricate barrel locks with petroleum based lubricants or graphite. Inoperative locks may result. (00152a)

1. See Ignition/Headlamp Key Switch: Softail Models. Verify switch is in LOCK position.
2. To remove the key from the ignition, push the key in and pull outward.
3. Always turn switch to LOCK position and remove key after operation and when leaving bike parked.

CAUTION

Turn the ignition switch to the OFF position and remove the key before locking the motorcycle. Leaving the key in the ACC position will keep the instrument lights on and result in a discharged battery. (00155a)

4. To remove the key from the ignition, push key in and turn it counterclockwise.
5. Remove the key.

NOTES:

- *ACC-Accessories and hazard warning flasher can be turned on. Instrument lamps are on. Brake lamp and horn can be activated. Key may not be removed.*
- *The lamps work when the switch is in the IGNITION position, as required by law in some localities.*
- *Harley-Davidson recommends removing key from ignition/fork lock before operating motorcycle. If you do not remove key, it can fall out during operation.*

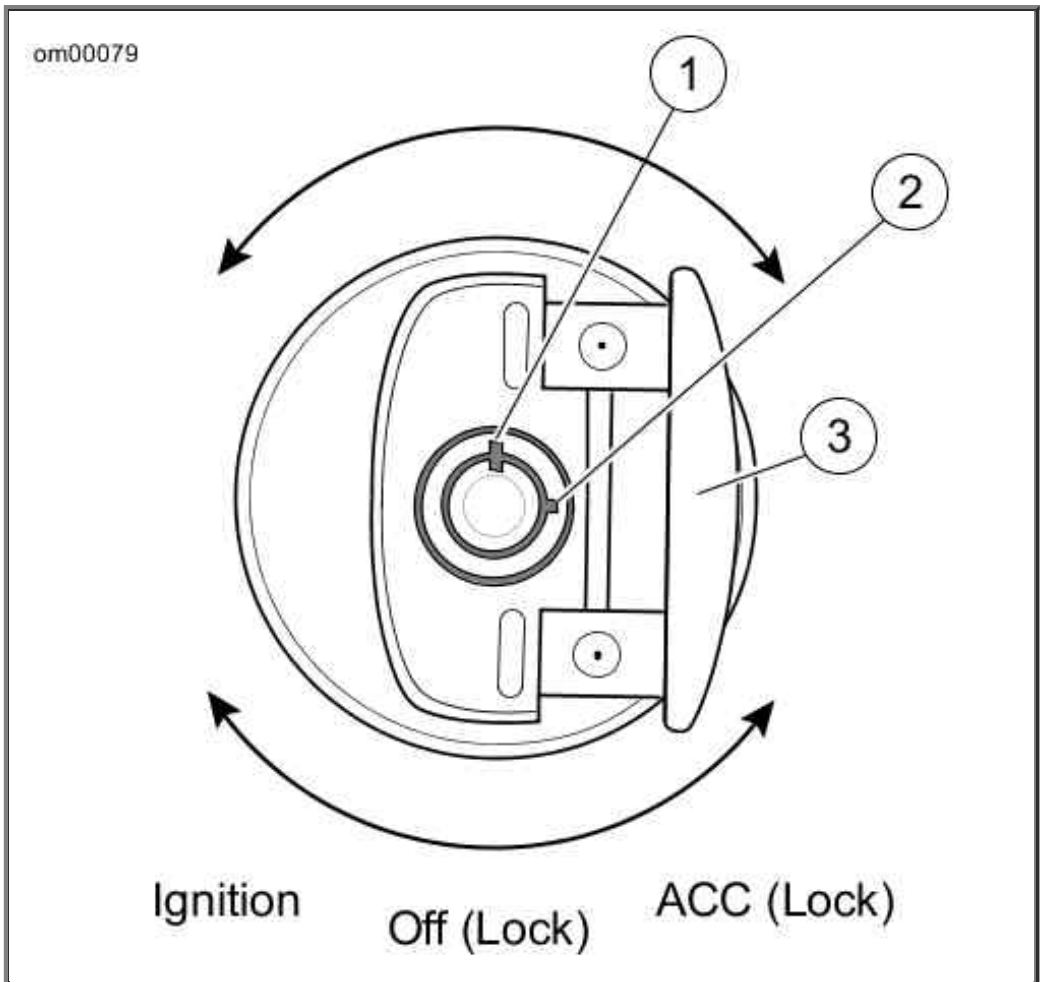

1. Lock position
2. Unlock position
3. Open switch cover

Ignition/Headlamp Key Switch: Softail Models

Ignition/Headlamp Switch Positions: 2005 Softail Models

LOCATION AND OPERATION	SWITCH POSITION	FUNCTION
Switch is on fuel tank instrument panel. Switch is locked or unlocked by lifting switch cover, inserting key and turning key counterclockwise to lock, clockwise to unlock. Key may be removed in any position.	OFF	Ignition, lamps and accessories are off.
	ACC*	Accessories are on. Hazard warning flashers can be operated. Instrument lamps are on. Brake lamp and horn can be activated.
	LAMPS and IGNITION*	Ignition, lamps and accessories are on.
*International models have an additional function - position lamp and tail lamp are also on.		

Hand Controls: Basic Operation

Electric Starter Switch

NOTE:

Off/Run switch MUST be in RUN position to operate engine.

See Handlebar Controls. The electric starter switch is located on the right handlebar control group. See Starting the Engine: Carbureted Models for detailed operation procedures.

1. Put the engine off/run switch in the RUN position and the transmission in neutral. Neutral (green) indicator lamp should be illuminated.

2. See Ignition/Headlamp Key Switch: Softail Models. Turn ignition/headlamp key switch to ON and push the START switch to operate starter motor.

Engine OFF/RUN Switch

See Handlebar Controls. The engine off/run switch (7) turns the ignition power ON or OFF. The engine off/run switch is located on the right handlebar control. Push the top portion of the engine off/run switch to turn off ignition power and shut the engine off. Push the bottom portion of the engine off/run switch to turn on ignition power.

NOTES:

- *The engine off/run switch must be in the ON position to start or operate the engine.*
- *The engine off/run switch should be used to shut the engine off.*

1. To shut the engine off, push the top of the off/run switch to the ignition OFF position.

2. See Ignition/Headlamp Key Switch: Softail Models. Turn the ignition key to the OFF position to turn the ignition power completely OFF.

Throttle Control Grip

See Handlebar Controls. The throttle control grip (9) is located on the right handlebar control and is operated with the right hand.

To reduce rider fatigue on long trips, a spring loaded throttle friction adjustment screw (10) is located at the bottom of the throttle grip clamp on non-cruise equipped models.

1. Slowly turn throttle control grip clockwise (toward the front of the bike) to close the throttle (decelerate).

2. Slowly turn throttle control grip counterclockwise (toward rear of bike) to open the throttle (accelerate).

⚠WARNING

Do not tighten throttle friction adjustment screw to the point where the engine will not return to idle automatically. Over-tightening can lead to loss of vehicle control, which could result in death or serious injury. (00031b)

3. Unscrew the throttle friction adjustment screw so the throttle returns to the idle position when the hand is removed from the grip.

4. Screw the throttle adjustment screw in to increase friction on grip. This provides a damping effect on throttle motion.

NOTE:

The throttle friction adjustment screw should not be used under normal stop and go operating conditions.

Clutch Hand Lever

⚠WARNING

Do not position fingers between hand control lever and handlebar grip. Improper hand positioning can impair control lever operation and cause loss of vehicle control, which could result in death or serious injury. (00032a)

The clutch hand lever (1) is located on the left handlebar and is operated with the fingers of the left hand.

1. Slowly pull clutch hand lever in against handlebar grip to fully disengage clutch.
2. Shift to first gear using the gear shifter lever. See Shifting Gears.
3. Slowly release the clutch hand lever to engage clutch.

Horn Switch

The horn is operated by pushing on the horn switch (2) located on the left handlebar control group.

Headlamp Dimmer Switch

The headlamp dimmer switch (3) is located on the left handlebar. The switch has two positions to activate the headlamps high or low beams.

- Press the top of the headlamp dimmer beam switch to activate the high beam.
- Press the bottom of the headlamp dimmer switch to return to the low beam.

See Indicator Lamps. The (blue) high beam indicator lamp will illuminate when the high beam is on.

Turn Signal Switches

Each handlebar control group contains a turn signal switch.

- The right turn signal switch (11) operates the right front and right rear flashing lamps.
- The left turn signal switch (4) operates the left front and left rear flashing lamps.

NOTE:

Front turn signal lamps also function as running lamps.

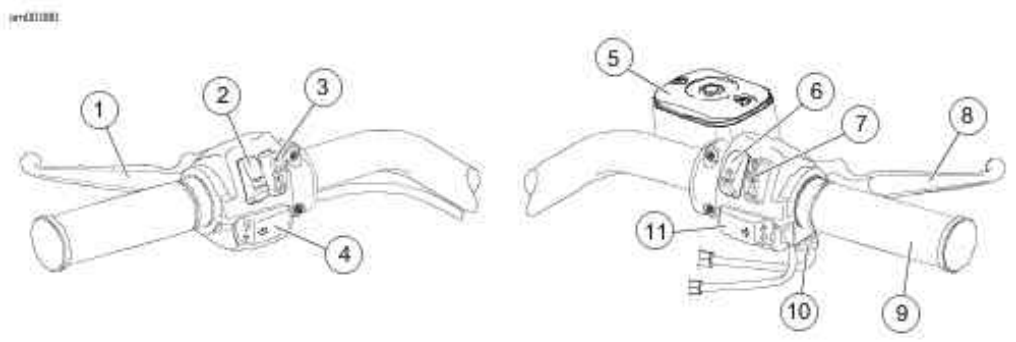

1. Clutch hand lever
2. Horn switch
3. Headlamp dimmer switch
4. Left turn signal switch
5. Master cylinder reservoir
6. Electric starter switch
7. Engine off/run switch
8. Brake hand lever
9. Throttle control grip
10. Throttle friction adjusting screw
11. Right turn signal switch

Handlebar Controls

Turn Signal Switch Operation

The turn signal switches are used by the turn signal module to control turn signal operation based on vehicle speed, vehicle acceleration and turn completion.

Momentarily depress the desired turn signal switch. The turn signal lamps will begin and continue flashing until they are manually or automatically cancelled. As long as the motorcycle is stationary, the signals will flash.

NOTES:

- *If you want the turn signals on longer, hold the switch in. The turn signals will begin flashing immediately, but the microprocessor will not begin computing distance until you release the switch.*
- *If you are signaling to turn in one direction and you depress the switch for the opposite turn signal, the first signal is cancelled and the opposite side begins flashing.*
- *If you want to stop the lamps from flashing, briefly depress the turn signal switch a second time. The turn signal lamps will stop flashing.*

Hazard Warning 4-Way Flasher

Use the following method to activate the four-way flashers.

1. With the ignition key ON and security system disarmed (models with security only), press the left and right turn signal switches at the same time.

2. Turn the ignition key OFF and arm the security system if present and desired. The four-way flashers will continue for two hours.

3. To cancel four-way flashing, disarm the security system if necessary, turn the ignition key ON and press the left and right turn signal switches at the same time.

This system allows a stranded vehicle to be left in the four-way flashing mode and secured until help is found.

Indicator Lamps

See Indicator Lamps. Five indicator lamps are provided.

- The green TURN indicators will flash when turn signals are activated; therefore, flashing indicates the chosen turn direction. When the 4-way hazard flashers are operating, both turn indicators will flash simultaneously.
- The blue BEAM indicator lamp, when lit, signals high beam headlamp operation.
- The green NEUTRAL lamp, when lit, signals the transmission is in neutral gear.
- The red OIL indicator lamp, when lit, signals that oil is not circulating through the engine.

NOTE:

The OIL indicator lamp will glow when the ignition is turned on prior to starting engine. With engine running, lamp should be off when engine speed is above idle.

Several other circumstances that could cause the red oil indicator lamp to signal, include the following:

- If the oil pressure indicator lamp does not go off at speeds above idling, it is usually because of an empty oil tank or diluted oil.
- In freezing weather the oil feed may clog with ice and sludge, preventing oil circulation.
- A grounded oil signal switch wire.
- A faulty signal switch.
- A damaged or improperly installed check valve.
- Trouble with the pump.

CAUTION

If the oil pressure indicator lamp remains lit, always check the oil supply first. If the oil supply is normal and the lamp is still lit, stop the engine at once and do not ride further until the trouble is located and the necessary repairs are made. Failure to do so may result in engine damage. (00157a)

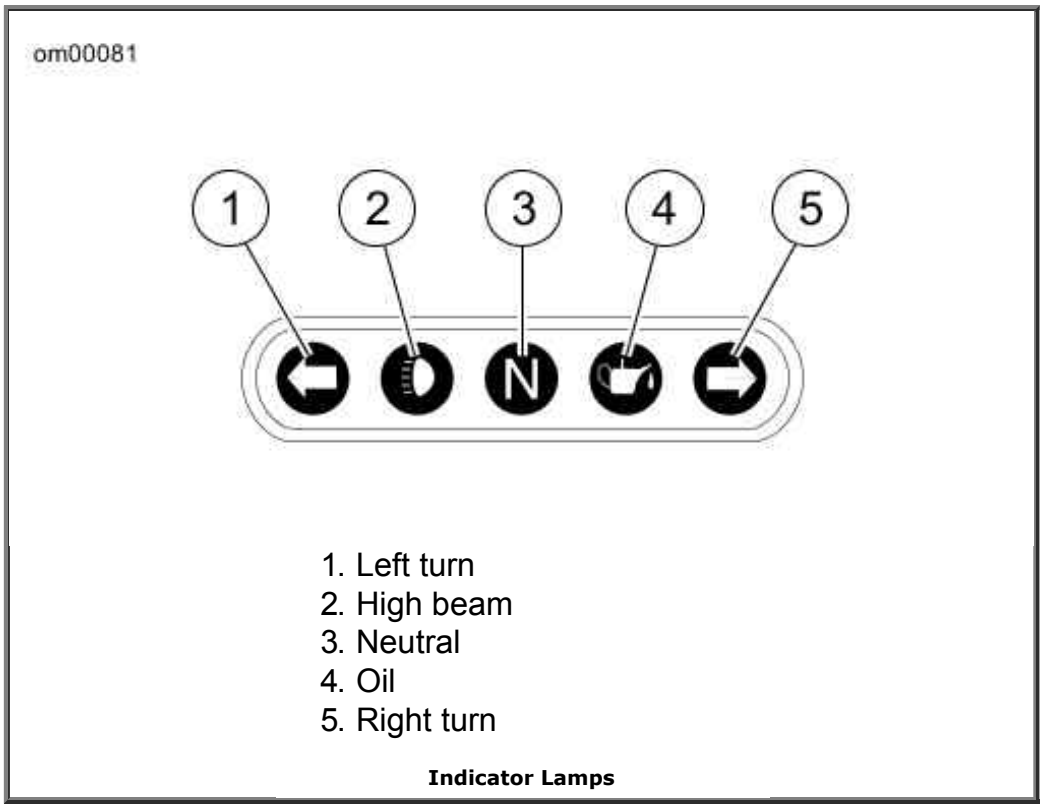

Indicator Lamps

Instruments: Softail Models

Speedometer

WARNING

Travel at speeds appropriate for road and conditions and never travel faster than posted speed limit. Excessive speed can cause loss of vehicle control, which could result in death or serious injury. (00008a)

See Speedometer/Odometer: Softail Models and Speedometer/Odometer: FXSTD Models. The speedometer registers miles per hour (U.S. models only) or kilometers per hour (international models only) of forward speed. The odometer registers the number of miles/kilometers the vehicle has traveled.

The electronic speedometer has a single display window for both the odometer and trip-odometer.

1. Press the function switch to change the display window on the speedometer face to either odometer or trip-odometer.
2. To reset the trip-odometer to zero, press button to reset speedometer display to the ODOMETER mode and hold the button in for approximately 2-3 seconds. The speedometer will switch to the trip-odometer mode and reset the display to zero.

Trip Odometer

Use the trip-odometer A or trip-odometer B to register number of miles/kilometers traveled on a trip or between refueling.

Odometer will display mileage when bike is OFF when function switch is pressed. There is no need to turn the bike on to check the odometer reading.

CAUTION

Never attempt to tamper with or alter the vehicle odometer. This is illegal. Tampering with or altering a vehicle odometer may cause equipment damage. (00160a)

Tip Indicator Lamp

⚠WARNING

If tip occurs, check all controls for proper operation. Restricted control movement can adversely affect the performance of the brakes, clutch or ability to shift, which could result in loss of vehicle control and death or serious injury. (00350a)

Should motorcycle be tipped over, the word "tip" will appear in the odometer window. Engine will not start until reset. To reset, cycle ignition/headlamp key switch ON-OFF-ON.

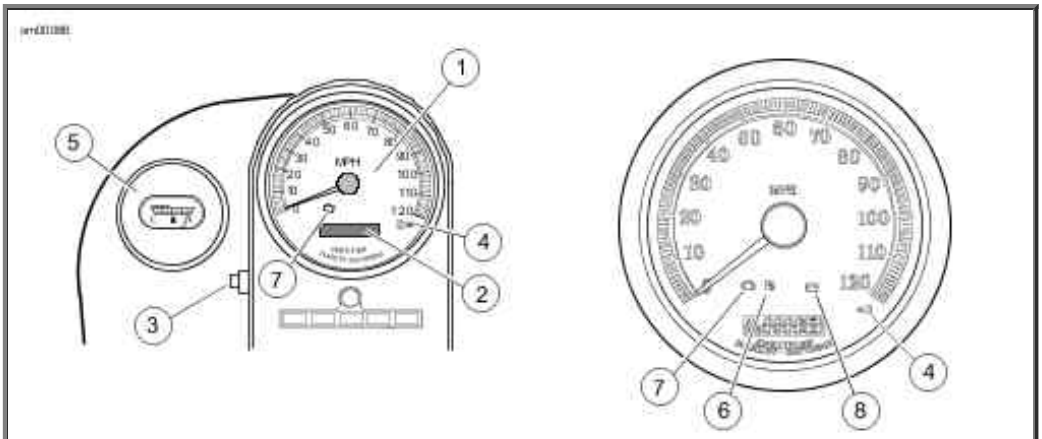

1. Speedometer
2. Tripodometer/Odometer
3. Function switch
4. Security system lamp
5. Fuel gauge
6. Low fuel warning lamp
7. Check engine lamp
8. Battery lamp

Speedometer/Odometer: Softail Models

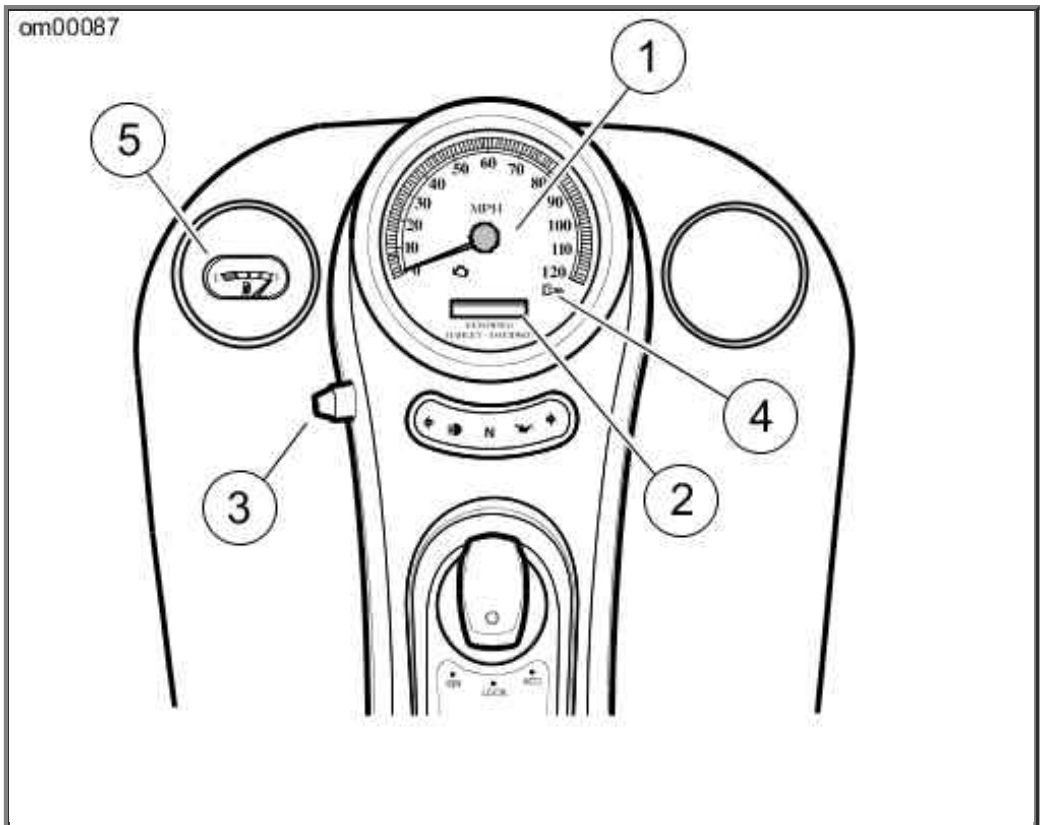

1. Speedometer
2. Tripodometer/Odometer
3. Function switch
4. Security system lamp
5. Fuel gauge

Speedometer/Odometer: FXSTD Models

Enrichener

Carbureted Models Only

A constant velocity (C.V.) carburetor uses an enrichener instead of a choke. An enrichener is operated almost the same way as a choke except there are two differences:

- When starting a cold engine, the throttle control MUST BE CLOSED for the enrichener to work properly.
- The enrichener does not have detents. The enrichener knob position can be adjusted from full-in to full-out.

See Setting the Enrichener. Engine speed increases as the enrichener knob is pulled out. By moving the enrichener knob, you adjust the air/fuel mixture to start a cold or warm engine.

1. Pull enrichener knob all the way out for cold engine starting.

CAUTION

Pay close attention to the vehicle's warm-up time. Either excessive or insufficient use of the enrichener may cause poor performance, erratic idle, poor fuel economy, spark plug fouling and equipment damage. (00164a)

2. Change the enrichener knob position between full-out or full-in as the situation requires.

NOTE:

See OPERATION section for detailed starting procedures.

Only carbureted models use an enrichener.

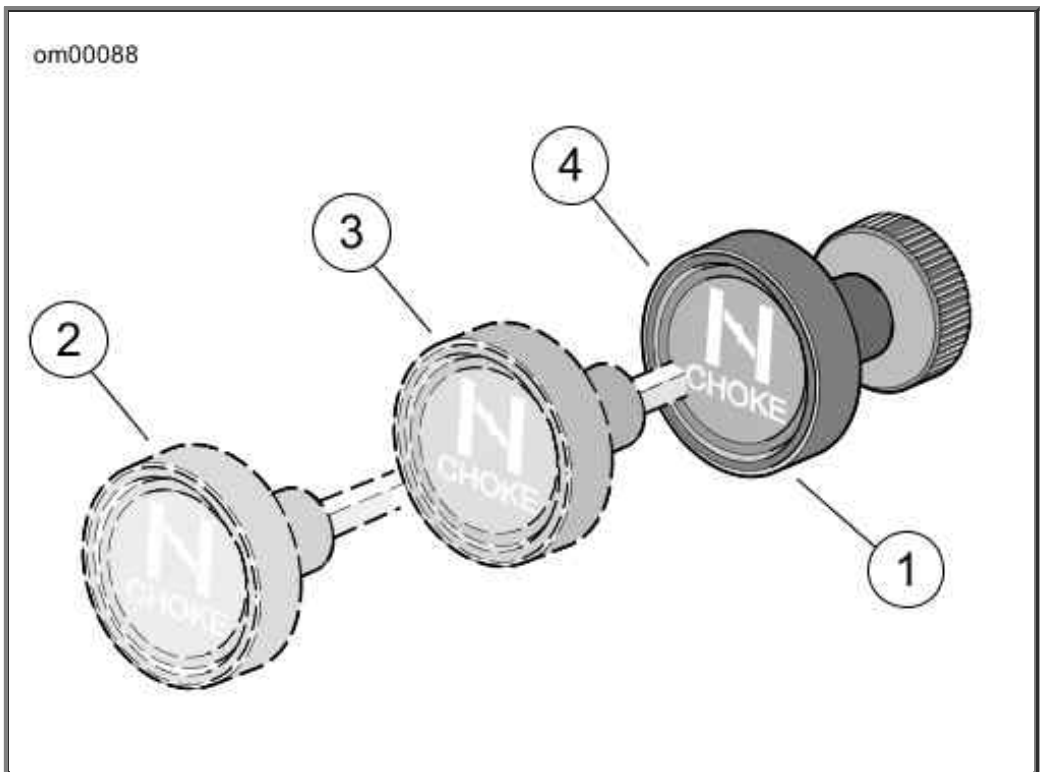

1. Enrichener knob
2. Full-out (cold engine starts)
3. 1/2 way position
4. Full-in (normal running position)

Setting the Enrichener

Sequential Port Fuel Injection

Check Engine Lamp

See Check Engine and Low Fuel Lamp (typical). The engine check lamp is located inside the instrument cluster. Its purpose is to indicate whether or not the engine/engine management system is operating normally. The engine lamp color is red.

The engine lamp normally comes on when the bike's ignition is first turned on and remains on for approximately 4 seconds, as the engine management system runs a series of self-diagnostics.

If the engine lamp comes on at any other time, see a Harley-Davidson dealer.

Low Fuel Lamp

See Check Engine and Low Fuel Lamp (typical). There is a low fuel warning lamp within the instrument cluster. The low fuel lamp lights up to indicate that you have at least 0.5 gallon (1.9 liters) of gasoline left in the tank. The low fuel lamp color is amber.

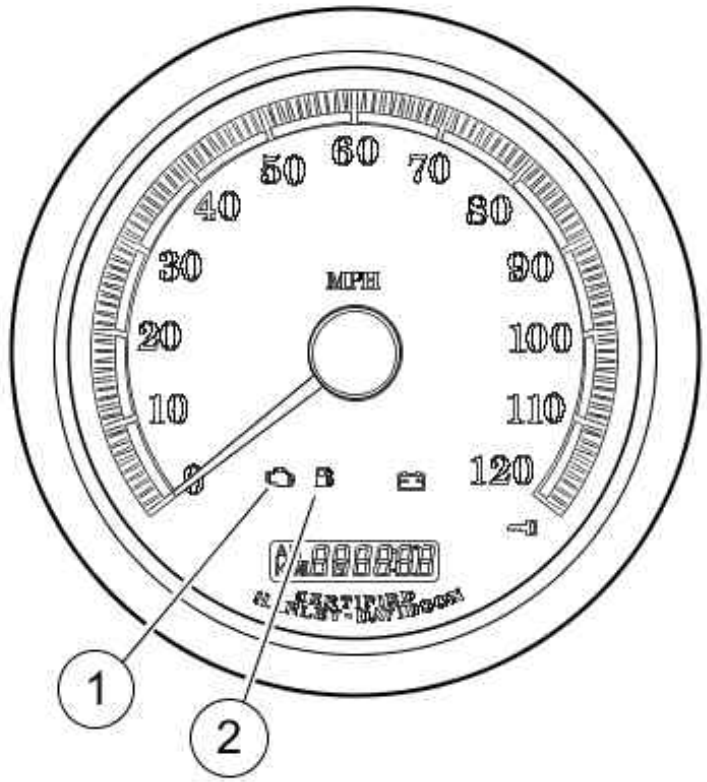

1. Check engine lamp
2. Low fuel lamp

Check Engine and Low Fuel Lamp (typical)

Gear Shift Lever

CAUTION

The clutch must be fully disengaged before attempting a gear shift. Failure to fully disengage the clutch can result in equipment damage. (00182a)

The gear shift lever is located on the left side of the motorcycle and is operated with the left foot.

1. Push the gear shift lever all the way down (full stroke) to shift the transmission to the next lower gear.
2. Lift the gear shift lever all the way up (full stroke) to shift the transmission to the next higher gear.

   NOTES:
   - *Release the gear shift lever after each gear change.*
   - *The lever must return to its central position before another gear change can be made.*

See Shifting Sequence: Downshift. First gear is the last gear position that can be found by pushing the gear shift lever full stroke downward.

Neutral is located between first and second gear. The green neutral indicator lamp on the dash

will illuminate when the transmission is in neutral.

1. To shift from first gear to neutral, lift the gear shift lever 1/2 of its full stroke.
2. To shift from second gear to neutral, push the gear shift lever downward 1/2 of its full stroke.

When the motorcycle is standing still and the engine is not running, shifting gears requires a different technique. Before shifting in this condition, move the motorcycle backward and forward with the clutch fully disengaged (clutch lever pulled in). While maintaining slight pressure on the shift lever, shift from one gear to another.

Even with the engine running and the motorcycle standing still, difficulty may be experienced in shifting gears. This difficulty occurs because transmission gears are not turning and shifting parts are not lined up to permit engagement.

CAUTION

When difficulty of shifting gears is experienced, do not under any circumstances, attempt to force the shift. The results of such abuse will be a damaged or broken shifter mechanism. (00161a)

See Shifting Gears for more information.

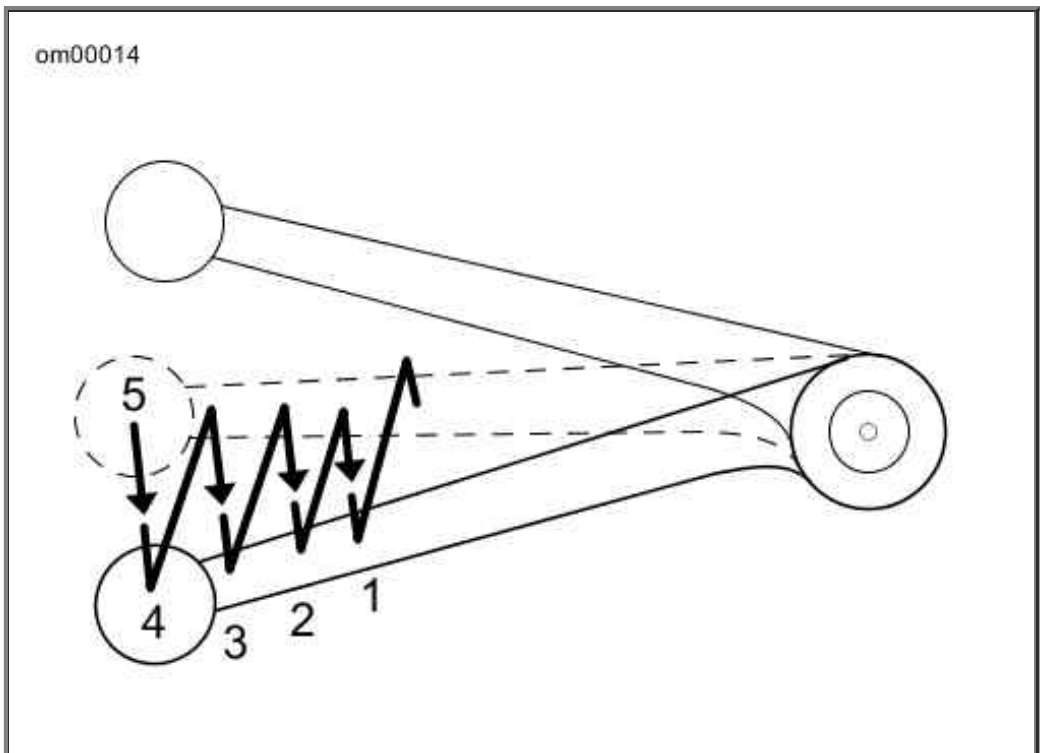

Shifting Sequence: Downshift

Heel-Toe Foot Shifter

See Heel-Toe Foot Shift Lever. Some motorcycles have a heel-toe shifter lever. With this shift lever, upshifts can be made with the heel of the left foot. Downshifts can be made with the toe.

- Pushing heel-toe foot shift lever all the way down (full stroke) shifts the transmission to the next lower gear.
- Lifting the foot shift lever all the way up (full stroke) shifts the transmission into the next

higher gear.

Release the foot shift lever after each gear change. This allows the lever to return to its central position before another gear change can be made.

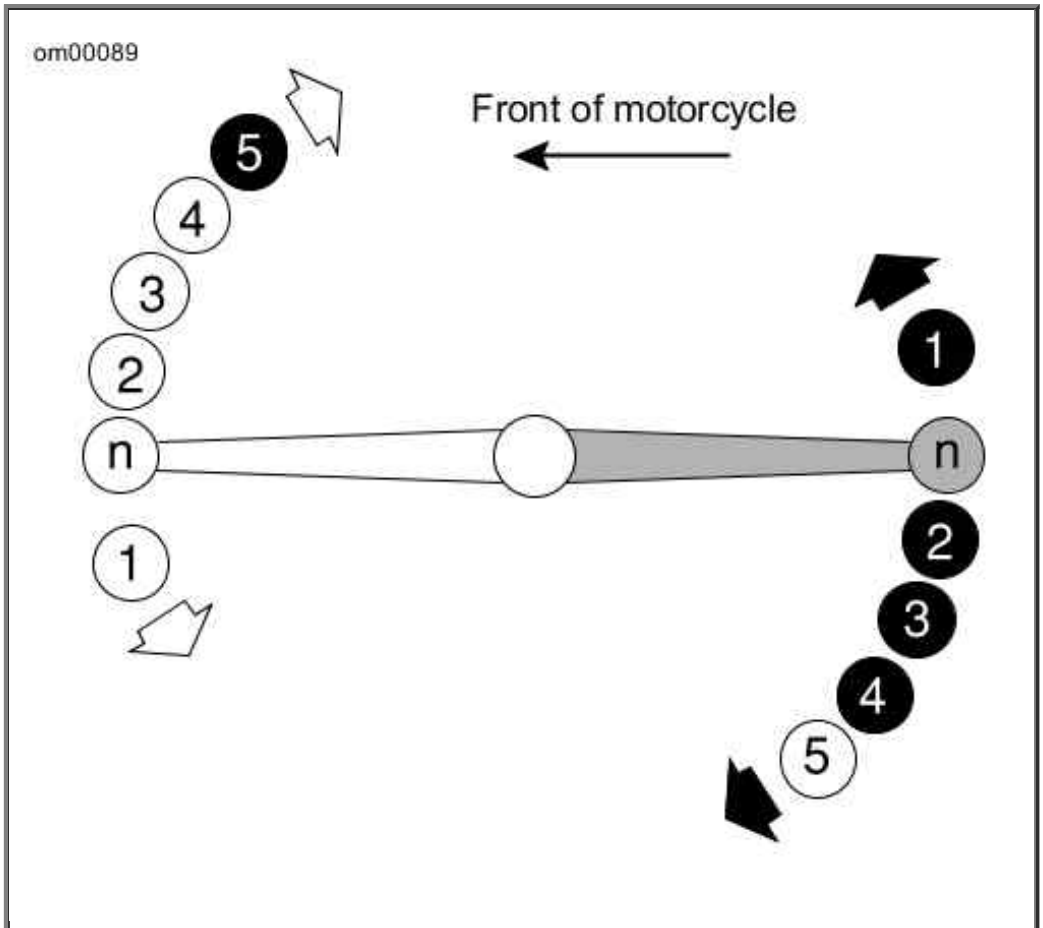

Heel-Toe Foot Shift Lever

Brake System

⚠WARNING

Do not apply brake strongly enough to lock the wheel. A locked wheel will skid and can cause loss of vehicle control, which could result in death or serious injury. (00053a)

The rear brake pedal controls the rear wheel brake and is located on the motorcycle's right side. Operate the rear brake pedal with the right foot.

The front brake hand lever controls the front wheel brake and is located on the right handlebar. Operate the hand lever with the fingers of the right hand.

⚠WARNING

Do not position fingers between hand control lever and handlebar grip. Improper hand positioning can impair control lever operation and cause loss of vehicle control, which could result in death or serious injury. (00032a)

Brakes should be applied uniformly and evenly to prevent wheels from locking up. A balance between rear and front braking is generally best.

Jiffy Stand

⚠WARNING

Always park motorcycle on a level, firm surface. An unbalanced motorcycle can fall over, which could result in death or serious injury. (00039a)

See Jiffy Stand Rubber Bumper: Softail Models. The jiffy stand is located on the left side of the motorcycle and swings outward to support the motorcycle for parking.

⚠WARNING

The jiffy stand locks when placed in the full forward (down) position with vehicle weight on it. If the jiffy stand is not in the full forward (down) position with vehicle weight on it, the vehicle can fall over which could result in death or serious injury. (00006a)

⚠WARNING

Be sure jiffy stand is fully retracted before riding. If jiffy stand is not fully retracted, it can contact the road surface causing a loss of vehicle control, which could result in death or serious injury. (00007a)

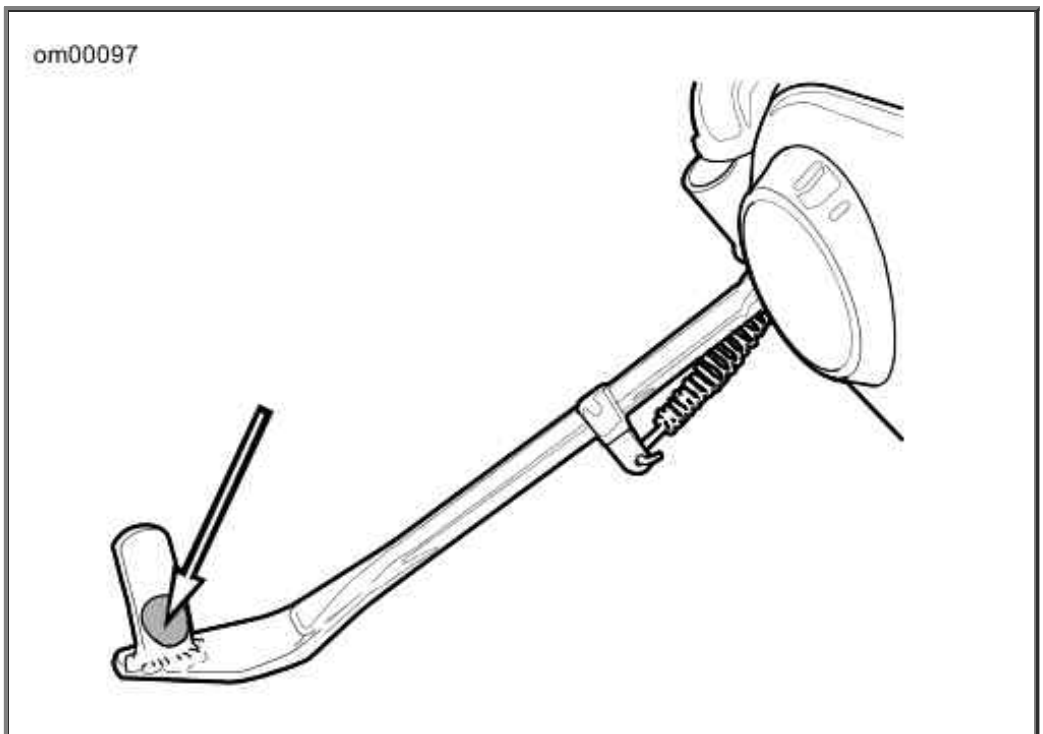

Jiffy Stand Rubber Bumper: Softail Models

Rear View Mirrors

⚠WARNING

Objects in mirrors are closer than they appear. Use caution when judging distance of objects in mirrors. Failure to judge correct distances could result in death or serious injury. (00033a)

Your vehicle is equipped with two convex rear view mirrors.

This type of mirror is designed to give a much wider view to the rear than a flat mirror. However, cars and other objects seen in this type of mirror will look smaller and farther away than when seen in a flat mirror.

- Use caution when judging the size or relative distance of objects seen in rear view mirrors.
- Always adjust the rear view mirrors to clearly reflect the area behind the motorcycle before riding.

NOTE:

Adjust mirrors so you can see a small portion of your shoulders in each mirror. This will help you establish the relative distance of vehicles to the rear of your motorcycle.

Fuel Supply Valve

Carbureted Models Only

See Fuel Supply Valve. The fuel supply valve is located under the fuel tank. The fuel supply is cut off to the engine when the valve handle is horizontal and when the engine is turned OFF.

1. Turn the handle to the horizontal position (2) to turn OFF main fuel supply.
2. Turn handle to position (3) to turn ON main fuel supply.
3. Turn the handle to position (1) to turn ON reserve fuel supply.

The fuel supply valve is vacuum-operated and will open and close when engine is turned ON or OFF.

NOTES:

- *The fuel supply valve on the vehicle should be turned OFF when the vehicle is not operating.*
- *To always maintain a reserve supply, do not operate the motorcycle with the valve in the reserve (RES) position after refueling.*

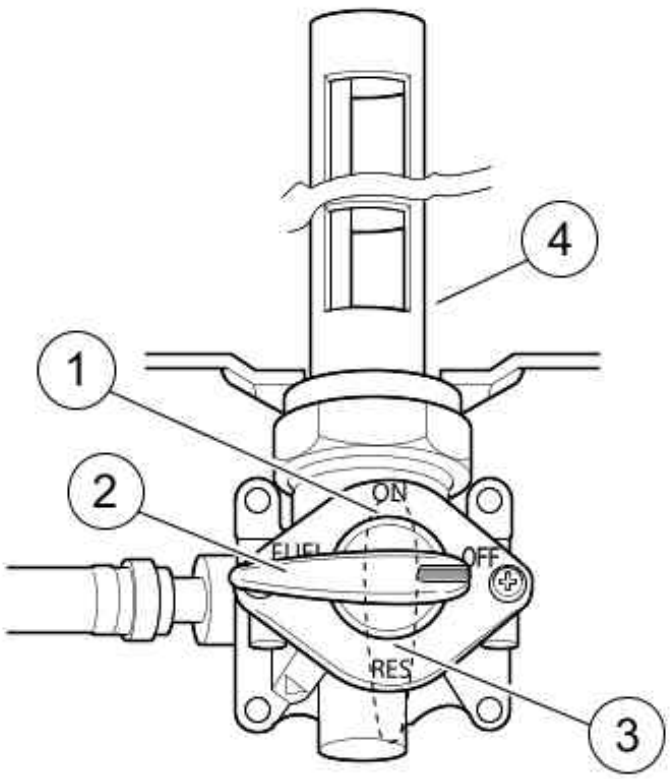

1. Handle UP (reserve supply) - ON position
2. Handle HORIZONTAL - OFF position
3. Handle DOWN (main supply) - ON position
4. Fuel strainer

Fuel Supply Valve

Fuel Filler Cap: Softail Models

⚠WARNING

Avoid spills. Slowly remove filler cap. Do not fill above bottom of filler neck insert, leaving air space for fuel expansion. Secure filler cap after refueling. Gasoline is extremely flammable and highly explosive, which could result in death or serious injury. (00028a)

See Fuel Tank: Softail Models. To open, turn fuel filler cap counterclockwise and lift up. To close, turn fuel filler cap clockwise until it clicks. The ratchet action of the cap prevents overtightening.

NOTES:

- *Fuel filler cap turns approximately a 3/4 turn before it starts unscrewing.*
- *Softail model fuel filler caps are located on the right side of the fuel tank. The cap on the left side is the fuel gauge and is NOT removable.*

See SAFE OPERATING RULES section and review safety procedures listed below.

CAUTION

Do not spill fuel onto the motorcycle while refueling. Immediately wipe up fuel spills on your motorcycle. Fuel can cause damage to painted surfaces. (00147a)

CAUTION

Use only unleaded fuel in catalytic converter-equipped motorcycles. Using leaded fuel will damage the emission control system. (00150b)

⚠WARNING

Do not store motorcycle with gasoline in tank within the home or garage where open flames, pilot lights, sparks or electric motors are present. Gasoline is extremely flammable and highly explosive, which could result in death or serious injury. (00003a)

⚠WARNING

Do not use aftermarket fuel caps. Aftermarket fuel caps may fit improperly and leak, which could lead to death or serious injury. See a Harley-Davidson dealer for approved fuel caps. (00034a)

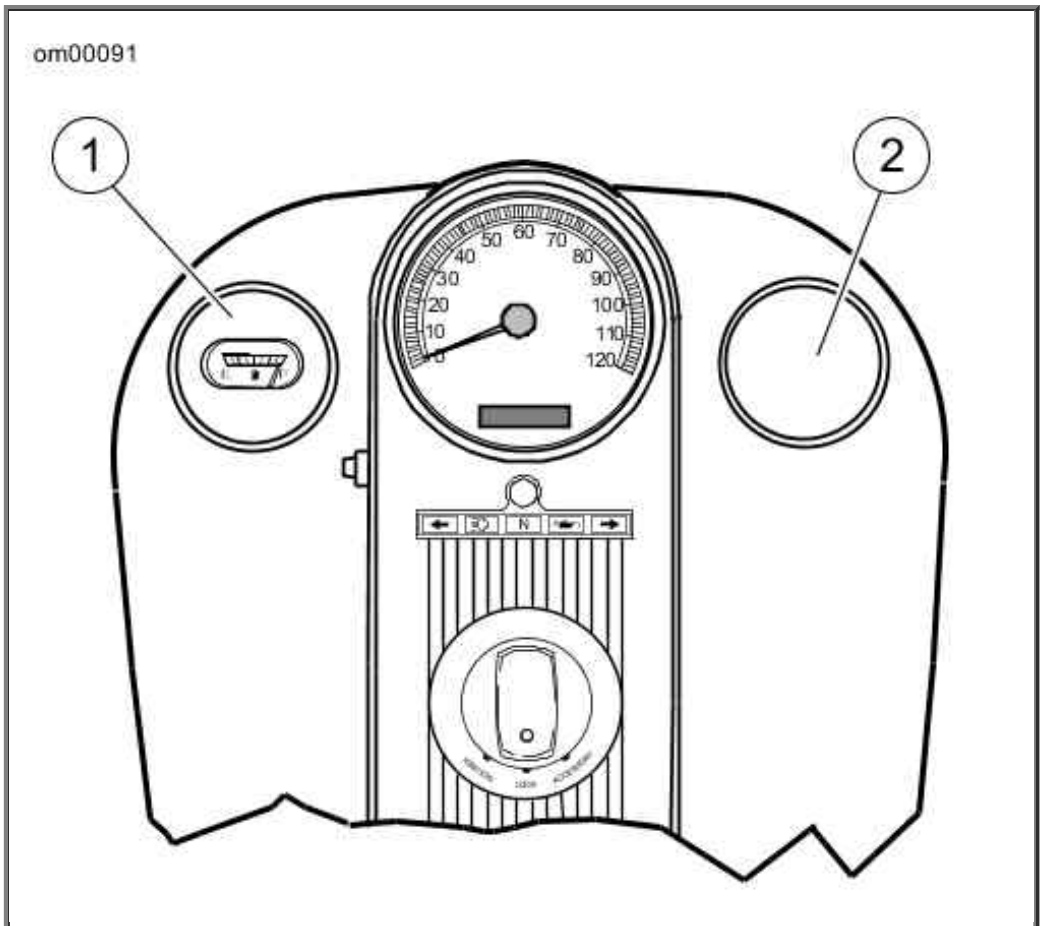

Fuel Tank: Softail Models

Fork Lock: Softail Models

CAUTION

Protect your vehicle against theft. After parking your motorcycle, lock the steering head and remove ignition key from switch. Failure to lock your motorcycle may result in theft and/or equipment damage. (00151a)

See Fork Lock. Softail models have the fork lock incorporated in the steering head on the right hand side.

⚠WARNING

Do not operate vehicle with forks locked. Locking the forks restricts the vehicle's turning ability, which could result in death or serious injury. (00035a)

Using the fork lock immediately after parking your motorcycle will discourage unauthorized use or theft when parking your motorcycle.

To Lock Fork

1. Turn fork to full left position.
2. Insert ignition key into fork lock.
3. Push in on fork lock and turn to left position.
4. Remove ignition key.

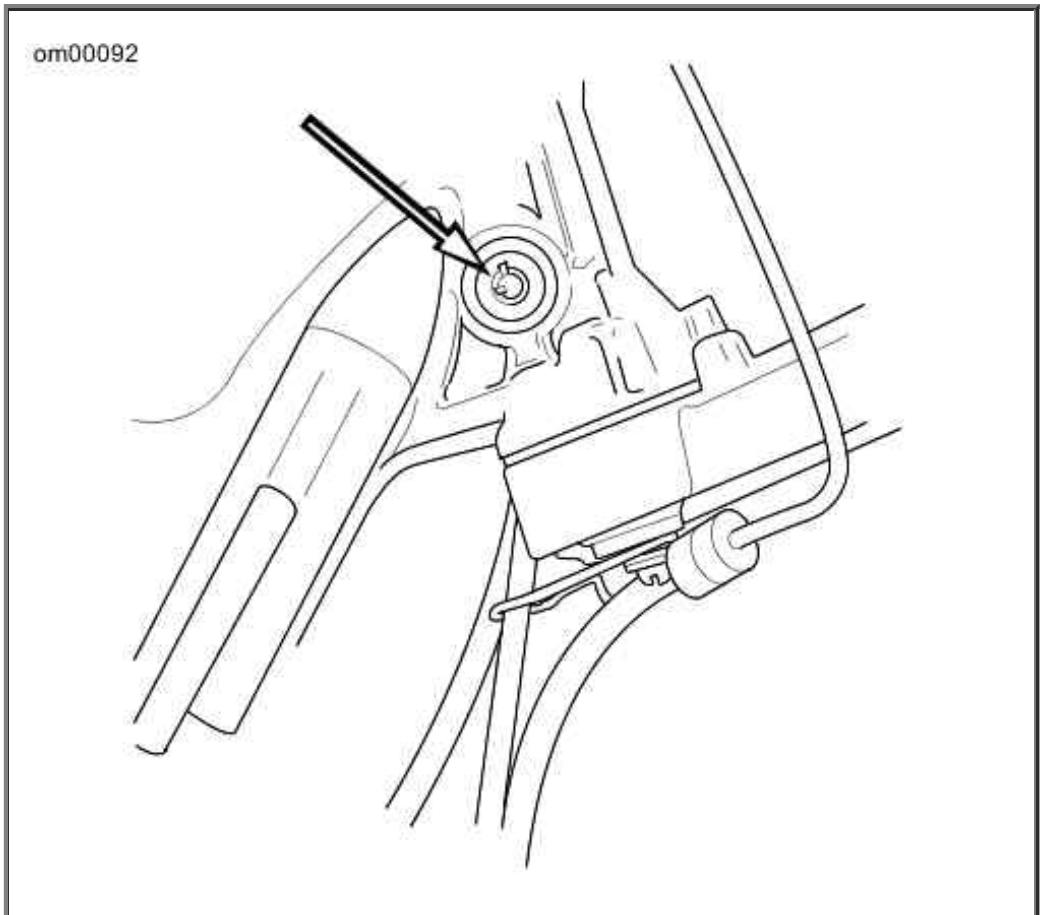

Fork Lock

Shock Absorbers: Softail Models

Softail models feature rear shock absorbers that can be adjusted. Rear shock spring preload may be varied to suit your own personal comfort.

NOTE:

Rear shocks should be adjusted with the vehicle resting on the jiffy stand.

Adjustment

1. Loosen jam nut.

⚠WARNING

Be sure both shock absorbers are adjusted to same preload position. Improper adjustment can adversely affect stability and handling, which could result in death or serious injury. (00036a)

2. See Rear Shock Absorber Adjustment: Softail Models. Use a spanner wrench to turn the spring adjuster plate to the desired position.
    a. Turning the adjuster plates out (toward locknut) increases the spring preload to carry a heavier load.
    b. Turning the adjuster plates in (away from the locknut) decreases the spring preload to carry a lighter load.
3. Tighten jam nut.

For removal and installation of the Softail rear shock absorbers see the appropriate service manual or contact a Harley-Davidson dealer.

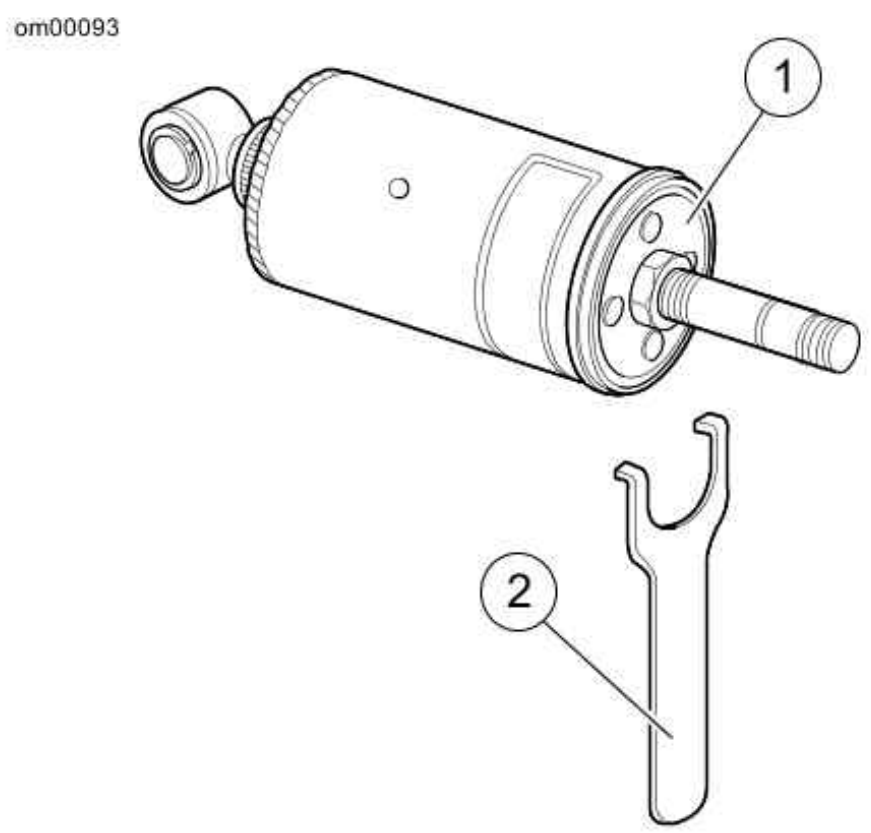

1. Adjuster plate
2. Spanner wrench

Rear Shock Absorber Adjustment: Softail Models

Saddlebags: FLSTC Models

WARNING

See the Accessory and Cargo section in your Owner's Manual. Improper loading of cargo or installation of accessories can affect motorcycle stability and handling, which could result in death or serious injury. (00021a)

CAUTION

Check that saddlebag frame(s) are fully seated on mounting studs and knobbed screw(s) are securely tightened. Failure to do so could result in the saddlebags becoming detached and/or damaged. (00171a)

The saddlebags are fastened to the bike at several points, each by an integral frame. Two saddlebags with attached brackets are mounted on each side of the rear fender. Each saddlebag is mounted to the fender brace and the frame of the motorcycle. Each saddlebag bracket supports the saddlebags and is mounted to the fender brace and the motorcycle frame.

Removal

1. See Saddlebag Assembly: FLSTC Shown. Unbuckle the saddlebag straps.
2. Use one hand to support the saddlebag and another hand to unscrew the flange locknuts from the saddlebag bracket.
3. Remove flange locknuts, washers, acorn nuts, and the saddlebag from the fender brace.

Installation

1. See Saddlebag Assembly: FLSTC Shown. Place the saddlebag in position with the mounting holes on the fender brace.
2. Push the bag hanger studs, washers and flange locknuts through the saddlebag mounting holes, saddlebag frame and fender brace as shown.
3. Tighten fasteners to 120-144 in-lbs (13.6-16.3 Nm) .
4. Buckle saddlebag straps.

⚠WARNING

Do not allow passenger to use saddlebags as grab handles. Failure to use a grab strap, designed for passengers to hold onto when riding, could result in death or serious injury. (00081a)

For proper saddlebag maintenance, see Leather Care.

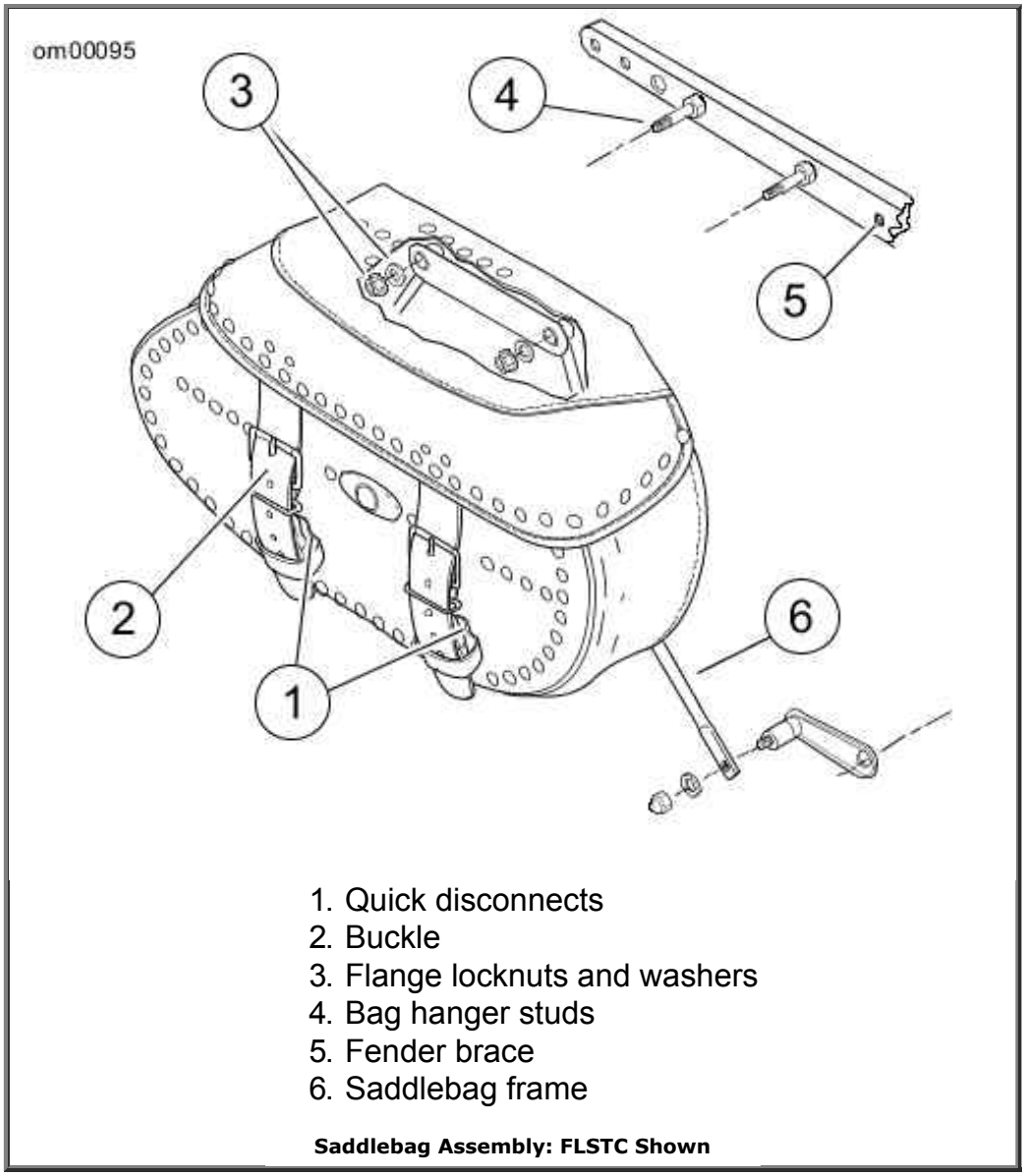

Saddlebag Assembly: FLSTC Shown

Saddlebag Operation

Opening

See Saddlebag Quick Disconnect. Some saddlebags have a quick disconnect feature. To use the quick disconnect strap feature:

1. Lift up the strap end to expose the quick release buckle.
2. Press on the lock tabs as shown.

NOTE:

The straps may also be opened and closed using the buckle in a conventional manner.

Closing

1. Insert the male strap end into the receptacle on the bag.
2. Push until a positive click is felt.

CAUTION

Check that saddlebag frame(s) are fully seated on mounting studs and knobbed screw(s) are securely tightened. Failure to do so could result in the saddlebags becoming detached and/or damaged. (00171a)

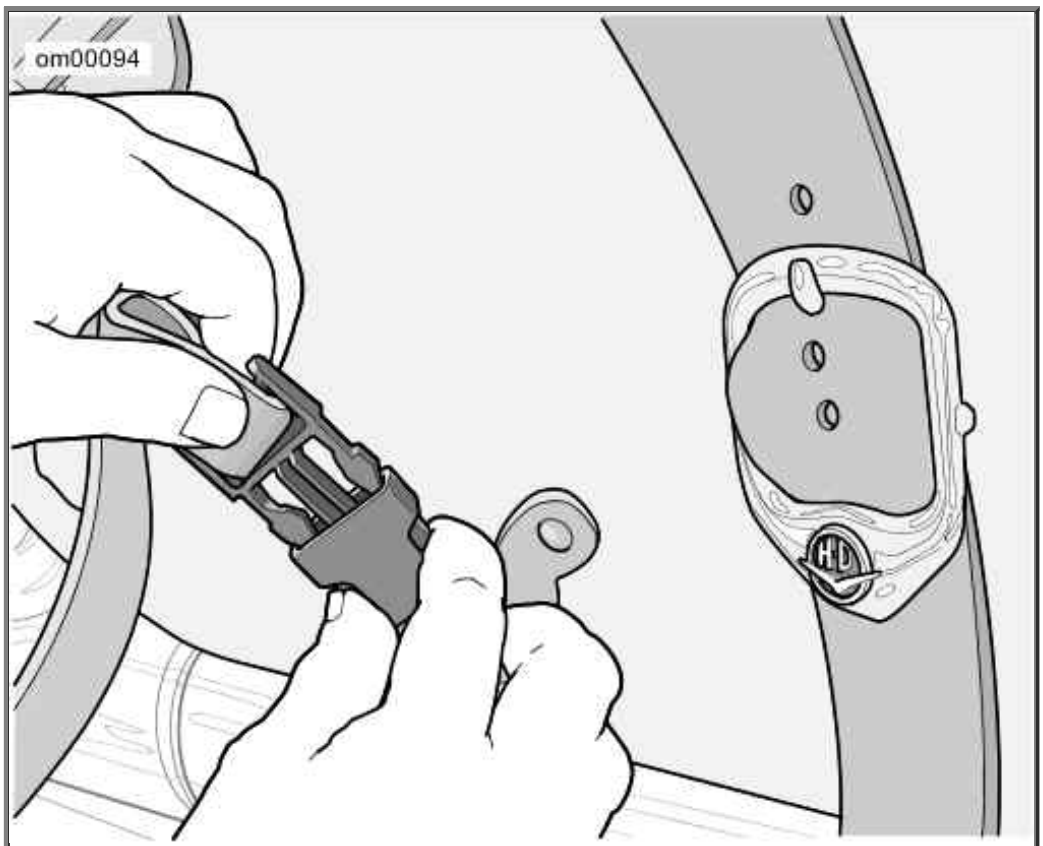

Saddlebag Quick Disconnect

Windshield: FLSTC Models

Removal

1. See Windshield Assembly. Insert your fingers into the wireform latch springs at either side of the windshield and move the TOP of the windshield assembly forward, until the TOP bracket notches slide away from the grommets.
2. Carefully lift the windshield bracket BOTTOM notches off the bottom grommets. Remove windshield.

Installation

1. See Windshield Assembly. Insert your fingers into the wireform latch springs at either side of the windshield and slide the BOTTOM windshield bracket notches onto the bottom grommets.
2. Slide the TOP bracket notches onto the top grommets.

NOTE:

For proper windshield maintenance, see Windshields.

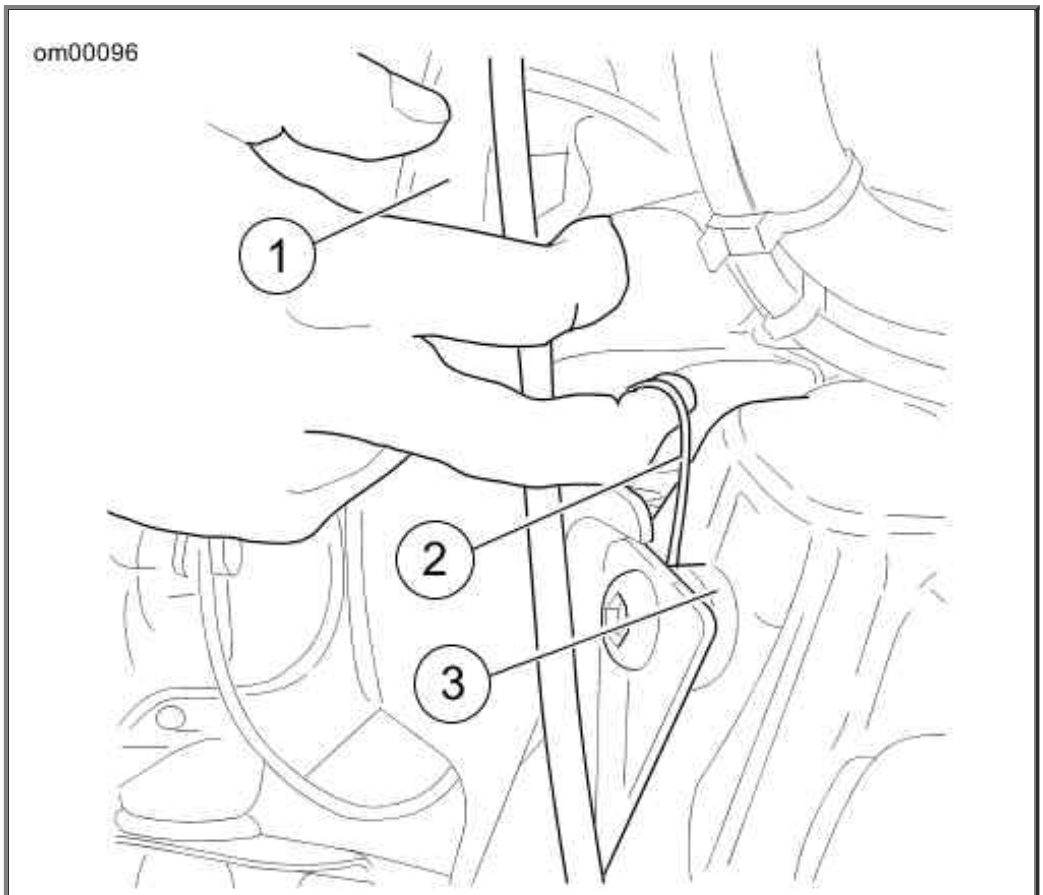

1. Windshield
2. Wireform latch spring
3. Grommet

Windshield Assembly

Auxiliary Lamps: FLSTC/FLSTN Models

See Auxiliary Lamp Switch. Use the auxiliary lamp switch to turn on the auxiliary lamps as required.

NOTES:

- *On the FLSTC, the auxiliary lamp switch is on the left, inside of the triple clamp shroud.*
- *The auxiliary lamps do not work when the headlamp is on high beam.*
- *Refer to service manual for alignment procedure.*

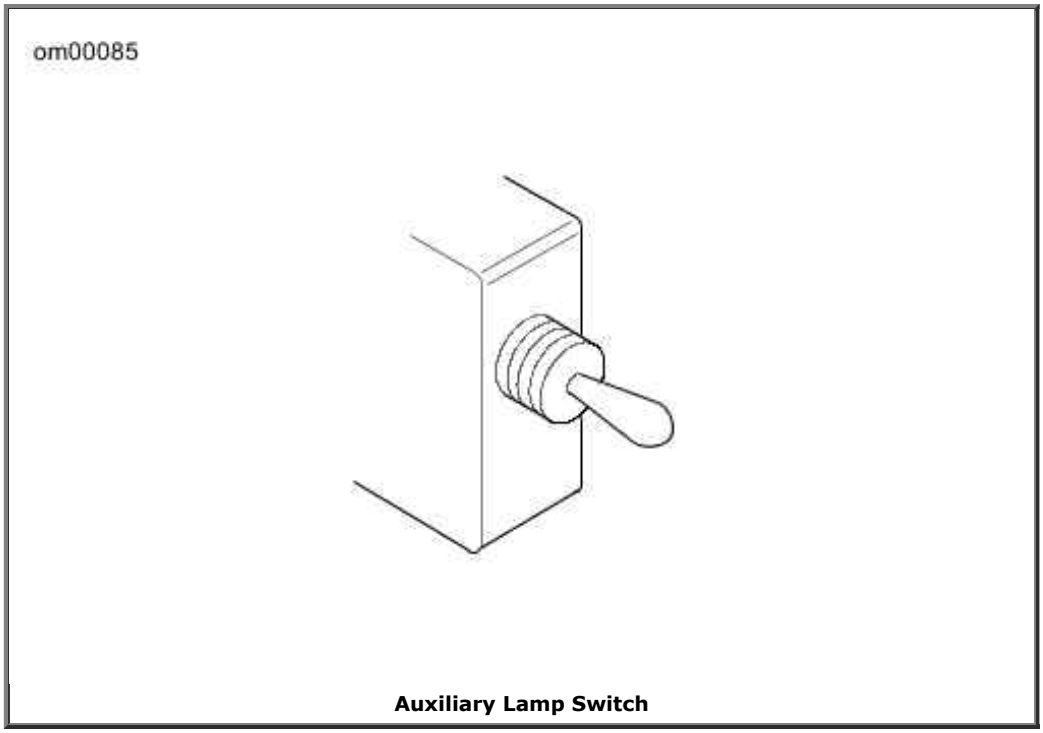

Auxiliary Lamp Switch

H-D Factory Security System

Basic Security System Operation

The security system provides security and immobilization functions. The security system will disable the starter and the ignition or EFI system. Additional functions include the ability to flash all four turn signals and sound a siren (if purchased as an option) if a theft attempt is detected.

Conditions that activate the security alarm when the system is armed include:

- Detecting vehicle movement.
- Detecting tampering of the ignition switch circuit.
- Detecting tampering of the security lamp circuit.
- Detecting that a battery disconnect has occurred while armed. (Activates siren only if P&A siren is installed.)

Security System Options

The following configurations are available on the security system unit:

- Alarm sensitivity.
- Auto-arming feature.
- Storage mode.

Factory settings for the security system include:

- Medium motion alarm sensitivity.
- Key fob arming mode.
- Storage mode set to 20 days.

FCC Regulations

This device complies with Part 15 of the FCC Rules and with RSS-210 of Industry Canada rules.

Operation is subject to the following conditions:

- This device may not cause harmful interference.
- This device must accept any interference received, including interference that may cause undesired operation.

Arming The System

There are two methods to arm the security system:

- **Remote-arming:** See Key Fob. Owners may enable security alarm and immobilization functions with a remote, personally carried transmitter. This transmitter is referred to as a key fob within this document.
- **Auto-arming:** Arms the security system within 30 seconds after IGNITION switch is turned OFF. To enable auto-arming see Using Auto-arming below.

NOTES:

- *The vehicle cannot be armed with the engine running or the ignition ON.*
- *International vehicles are configured for auto-arming. This cannot be changed.*

Using Key Fob

See Key Fob. Hold down the key fob button until the system responds with two turn signal flashes and two chirps from optional siren. To assign a key fob to a motorcycle, refer to Key Fob Assignment.

Using Auto-arming

Auto-arming causes the security system to automatically arm itself (without the use of the key fob) within 30 seconds after the ignition key is turned OFF. During this period, the security lamp stays on solid to indicate auto-arming is starting up.

The vehicle may be moved during these 30 seconds without triggering the alarm. However, any motion after that period will trigger the security alarm. Upon expiration of the auto-arming period, the turn signals flash twice, the security lamp begins to flash and the siren (if installed) chirps twice.

To set the auto-arming selection, refer to Auto-arming Configuration (Not Available on International Vehicles).

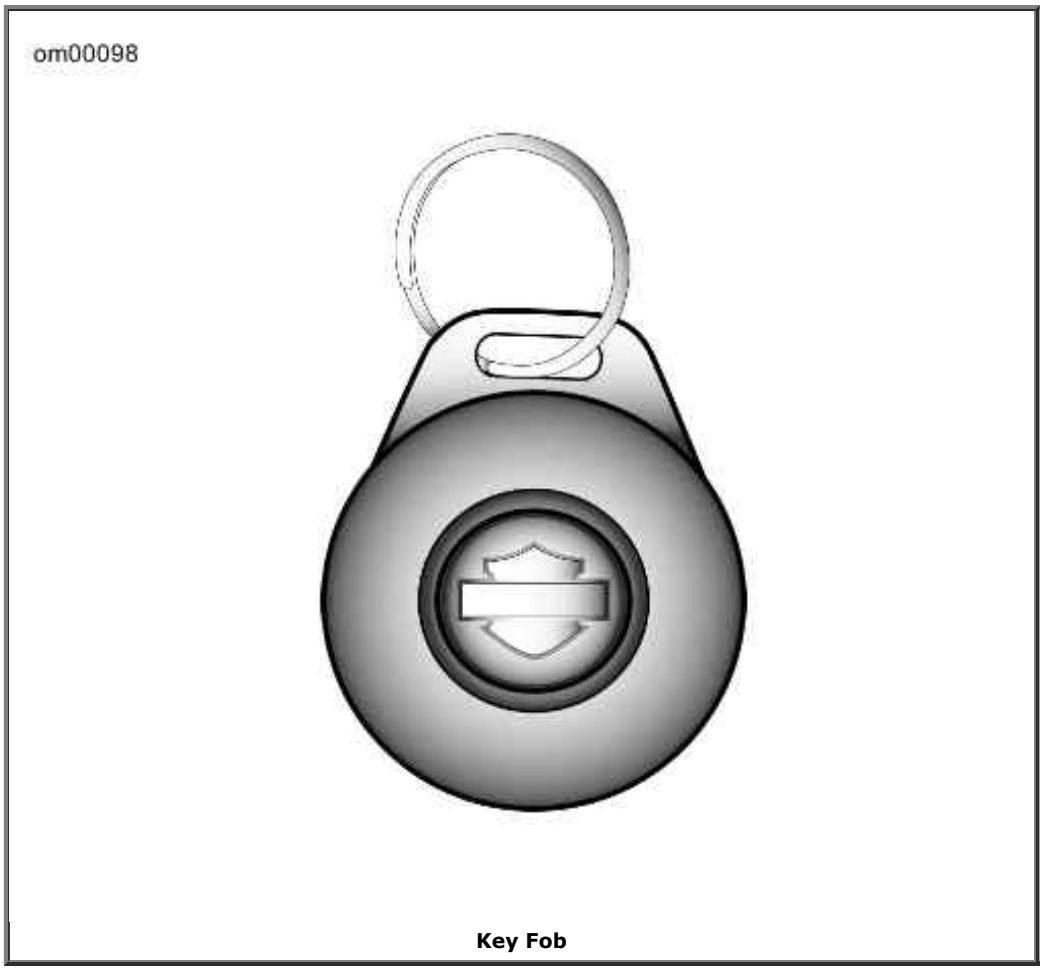

Key Fob

Disarming The System

There are two ways to disarm the system:

- **Remote disarming:** See Key Fob. Owners may disable security alarm and immobilization functions with a remote, personally carried transmitter. This transmitter is referred to as a key fob within this document.
- **Personal code:** If a key fob is not available, the security system allows the rider to disable the security alarm and immobilization functions if the rider knows the previously entered personal code.

NOTE:

Do not forget to enter a personal code for security system vehicles. If a code is not assigned and the key fob is lost or damaged while the vehicle is armed, the security system module must be replaced. Refer to Programming a Personal Code for personal code setup.

Using Key Fob

See Key Fob. Quickly press the key fob button twice. The system will respond with one turn signal flash.

NOTES:

- ***Disarming function may require practice.*** *The key fob button must be pressed twice within 1.5 seconds to send the disarm command. The action is very similar to double-clicking a computer mouse. Light quick taps work best; very hard or very slow taps are less likely to work.*

- *If the system is remotely disarmed (with the key fob) but the ignition key is not turned ON within 30 seconds, the system will rearm itself when auto-arming is enabled.*

Using Personal Code

Enter the five digit personal code you have chosen using the left and right turn signal switches. For complete procedure refer to Entering a Personal Code to Disarm Security System. To create a personal code, refer to Programming a Personal Code.

NOTE:

If you make an error while disarming the security system using the personal code, the alarm will activate for 30 seconds after the last digit is entered. After a failed attempt, the security lamp will flash once every second for 10 minutes. During this time, the vehicle will not accept any attempt to enter a personal code.

Entering a Personal Code to Disarm Security System

STEP NO.	ACTION	WAIT FOR CONFIRMATION	NOTES
NOTE: The left turn signal switch is used for code number entry and the right turn signal is used as the "enter" key.			
1	Know your 5 digit personal code		
2	Turn **IGN** key to **ACC**		
3	Hold **both** turn switches in until confirmation	Security lamp blinks at fast rate	
4	Enter first digit of code (**a**) by pressing **left** turn switch **a times**		
5	Press **right** turn switch **1 time**		Serves as enter key for first digit
6	Enter second digit of code (**b**) by pressing **left** turn switch **b times**		
7	Press **right** turn switch **1 time**		Serves as enter key for second digit
8	Enter third digit of code (**c**) by pressing **left** turn switch **c times**		
9	Press **right** turn switch **1 time**		Serves as enter key for third digit
10	Enter fourth digit of code (**d**) by pressing **left** turn switch **d times**		
11	Press **right** turn switch **1 time**		Serves as enter key for fourth digit
12	Enter fifth digit of code (**e**) by pressing **left** turn switch **e times**		
13	Press **right** turn switch **1 time**	Security lamp stops blinking	System is disarmed. You may use the vehicle or program another key fob.

Security Status Lamp

See Security System Icon. A lamp within the speedometer face tells the rider if the system is armed or disarmed.

Refer to Security Lamp Status for an explanation of the lamp's activity.

Security Lamp Status

SECURITY LAMP STATUS	MODE
Does not flash.	No security system (TSSM), security system not armed or storage mode active.
Flashes every second.	10 minute time-out after failed personal code entry attempt.
Flashes every 2 seconds.	Security system armed.
Flashes 3 times a second.	Personal code entry mode.
Stays ON solid with ignition key OFF.	Auto-arming is started up. You have 30 seconds before system armed.
Stays ON solid with ignition key ON.	If solid for more than 8 seconds after key is ON, a current trouble code is present.

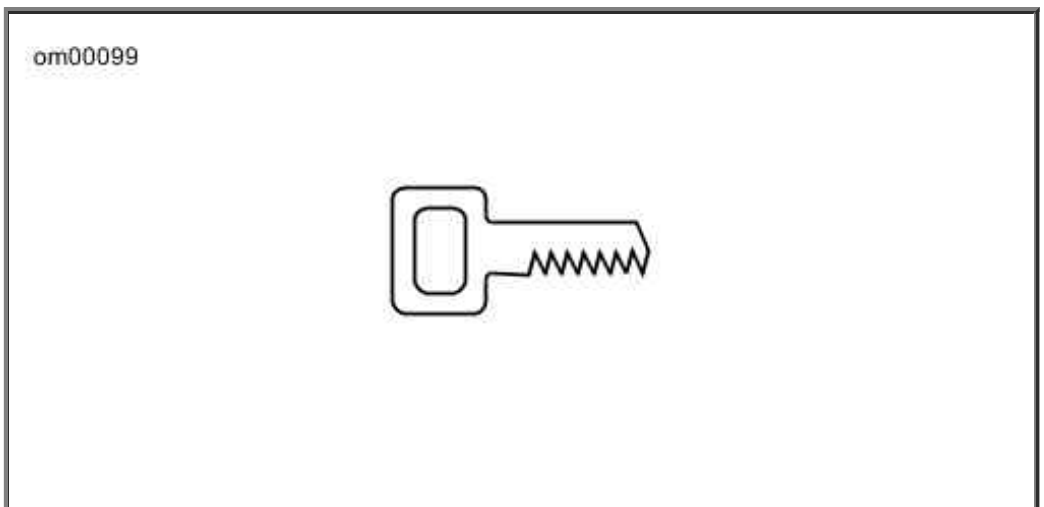

Security System Icon

Transport Mode

It is possible to arm the security system without enabling the motion detector for one ignition cycle. This allows the vehicle to be moved in an immobilized state for transport.

The transport mode is used for moving the vehicle or transporting on a trailer with the security system armed and without tripping the alarm. When the vehicle is in the transport mode, the security system does not respond to motion detection.

1. To exit the transport mode, use the key fob to disarm the vehicle.

2. To enter the transport mode, refer to Transport Mode.

NOTE:

Transport mode is especially useful when working on international vehicles. If it is not used, the alarm will activate under many typical service activities.

Transport Mode

STEP NO.	ACTION	WAIT FOR CONFIRMATION	NOTES
1	Turn **IGN** key **ON**		
2	Press and hold **key fob** button until confirmation is received	3 flashes turn signals & indicators	
3	Turn **IGN** key **OFF**		
4	Press and hold **key fob** button until confirmation is received	3 flashes turn signals & indicators	The vehicle can be moved without tripping the alarm

Security System Custom Setup

Key Fob Assignment

The key fob on security system motorcycles must be set so it will operate the alarm system on the vehicle. This assignment must be completed with no pauses greater than 10 seconds between steps. Turn the ignition OFF after both key fobs have been assigned. The programming mode will also exit after 60 seconds has elapsed without detecting any key fob sign up messages or turn signal activity.

Procedure

To assign a key fob to a motorcycle, refer to Key Fob Assignment.

Two key fobs may be assigned to the security system. The first successful attempt to program a key fob will disable all previously assigned key fobs. If a second key fob is to be programmed, it must be done in the same programming sequence as the initial key fob.

Key Fob Assignment

STEP NO.	ACTION	WAIT FOR CONFIRMATION	NOTES
1	Turn **IGN** key **ON**-OFF-**ON**-OFF-**ON**		
2	Press **left** turn switch **2 times** and release	2-3 flashes turn signals & indicators depending on vehicle configuration (See BATTERY DISCONNECTS AND CONFIGURING section)	2 flashes - North American/Domestic configuration security system 3 flashes - international configuration security system
3	Press **right** turn switch **1 time** and release	1 flash turn signals & indicators	
4	Press **left** turn switch **1 time** and release	2 flashes turn signals & indicators	
5	Press and hold **key fob** button until confirmation is received	2 flashes turn signals & indicators	This may take 10-25 seconds
6	If you have two key fobs, press and hold button on second **key fob** until confirmation is received	2 flashes turn signals & indicators	Optional step
7	Turn **IGN** key OFF		

Personal Code

Creating Code for the First Time

The personal code consists of five digits entered using the left and right turn signal switches. Each digit can be any number from 1-9. The personal code is intended to be used to disarm the vehicle in case the key fob is not functioning.

Record your personal code on the card(s) provided in the rear of the Owner's Manual. Carry one for reference in your wallet when riding.

To set a personal code on a motorcycle with no code previously installed, refer to Programming a Personal Code. The procedure listed uses 3-1-3-1-3 as the sample personal code.

NOTE:

For better security, do not use 3-1-3-1-3 as a personal code. It is shown as an example only.

Decide what five digit code the owner would like to use. The code will be programmed using the turn signal switches and key fob. Record your personal code on the card(s) provided in the rear of the Owner's Manual. Carry one for reference in your wallet when riding.

- When programming the personal code, the security lamp flashes to provide feedback when entering each digit.
- The number of security lamp flashes corresponds to the number currently selected for a

given digit. Therefore, the lamp may flash 1-9 times depending on the number entered.
- Press the left turn switch one time to increment each digit of the code.
- Quickly press the key fob button twice to advance to the next digit of the code.

NOTE:

The programming mode exits upon turning the key switch to OFF or if no turn signal switch/key fob button activity occurs for 60 seconds. No data is saved for partial configuration attempts of a first time entry.

Modifying Existing Codes

If a code was previously entered, the lamp will flash the equivalent digit. Each additional press of the left turn switch will increment the digit.

- To advance from 5 to 6, press and release the left turn switch 1 time.
- To advance from 8 to 2, press and release the left turn switch 3 times (9-1-2).

Programming a Personal Code

STEP NO.	ACTION	WAIT FOR CONFIRMATION	NOTES
NOTE: For better security, do not use 3-1-3-1-3 as a personal code. It is shown as an example only.			
1	Set **RUN/OFF** switch to **OFF**		Verify that security lamp is **not** blinking (vehicle is disarmed)
2	Turn **IGN** key **ON**-OFF-**ON**-OFF-**ON**		
3	Press **left** turn switch **2 times** and release	1-3 flashes turn signals & indicators depending on vehicle configuration (See BATTERY DISCONNECTS AND CONFIGURING section)	1 flash - Worldwide TSSM, no security 2 flashes - North American/Domestic configuration security system 3 flashes - international configuration security system
4	Quickly press **key fob** button **2 times** and release	1 flash turn signals & indicators	Vehicle is in personal code entry mode
5	Press **left** turn switch **1 time** and release	None if no code entered 1-9 flashes if code previously entered	A lack of confirmation flashes indicates no digit is entered
6	In this example, you will press and release three times If code previously entered, count flashes for number and then press and release **left** turn switch to advance through the digits	Security lamp flashes to indicate each digit selected Digit will display on odometer In this example, the lamp will flash 3 times	You've selected 3 as a number for the first digit
7	Quickly press **key fob** button **2 times** and release	2 flashes turn signals & indicators	You've confirmed 3 as a number for the first digit and have advanced to entering the second digit
8	Press **left** turn switch **1 time** and release	None if no code entered 1-9 flashes if code previously entered	A lack of confirmation flashes indicates no digit is entered
9	In this example, you will perform this step one time If code previously entered, count flashes for number and then press and release **left** turn switch to	Security lamp flashes to indicate each digit selected Digit will display on odometer	You've selected 1 as a number for the second digit

	advance through the digits	In this example, the lamp will flash 1 time	
10	Quickly press **key fob** button **2 times** and release	3 flashes turn signals & indicators	You've confirmed 1 as a number for the second digit and have advanced to entering the third digit
11	Press **left** turn switch **1 time** and release	None if no code entered 1-9 flashes if code previously entered	A lack of confirmation flashes indicates no digit is entered
12	In this example, you will repeat this step three times If code previously entered, count flashes for number and then press and release **left** turn switch to advance through the digits	Security lamp flashes to indicate each digit selected Digit will display on odometer In this example, the lamp will flash 3 times	You've selected 3 as a number for the third digit
13	Quickly press **key fob** button **2 times** and release	4 flashes turn signals & indicators	You've confirmed 3 as a number for the third digit and have advanced to entering the fourth digit
14	Press **left** turn switch **1 time** and release	None if no code entered 1-9 flashes if code previously entered	A lack of confirmation flashes indicates no digit is entered
15	In this example, you will perform this step one time If code previously entered, count flashes for number and then press and release **left** turn switch to advance through the digits	Security lamp flashes to indicate each digit selected Digit will display on odometer In this example, the lamp will flash 1 time	You've selected 1 as a number for the fourth digit
16	Quickly press **key fob** button **2 times** and release	5 flashes turn signals & indicators	You've confirmed 1 as a number for the fourth digit and have advanced to entering the fifth digit
17	Press **left** turn switch **1 time** and release	None if no code entered 1-9 flashes if code previously entered	A lack of confirmation flashes indicates no digit is entered
18	In this example, you will repeat this step three times If code previously entered, count	Security lamp flashes to indicate each digit selected	You've selected 3 as a number for the fifth digit

	flashes for number and then press and release **left** turn switch to advance through the digits	Digit will display on odometer In this example, the lamp will flash 3 times	
19	Quickly press **key fob** button **2 times** and release	1 flashes turn signals & indicators	You've confirmed 3 as a number for the fifth digit and have gone back to the first digit
20	Turn **IGN** key OFF		
21	Write down code in owner's manual		
22	Arm the security system and attempt to disarm using personal code entry		

Enable Auto-arming Selection

The security system allows remote arming via the key fob at anytime. However, if the system is remotely disarmed (with the key fob) but the ignition key is not turned ON within 30 seconds, the system will rearm itself when auto-arming is enabled.

To set the auto-arming selection, refer to Auto-arming Configuration (Not Available on International Vehicles).

NOTE:

Auto-arming configuration cannot be altered on international vehicles.

Auto-arming Configuration (Not Available on International Vehicles)

STEP NO.	ACTION	WAIT FOR CONFIRMATION	NOTES
1	Turn **IGN** key **ON**-OFF-**ON**-OFF-**ON**		
2	Press **left** turn switch **2 times** and release	2 or 3 flashes turn signals & indicators depending on vehicle configuration (See BATTERY DISCONNECTS AND CONFIGURING section)	2 flashes - North American/Domestic configuration security system 3 flashes - international configuration security system
3	Press and hold **key fob** button until confirmation is received	1 flash turn signals & indicators	
4	Press and hold **key fob** button until confirmation is received	2 flashes turn signals & indicators	
5	Press **left** turn switch **1 time** and release	Turn signals & indicators flash to indicate the current option selected	1 flash - auto-arming disabled 2 flashes - auto-arming enabled
6	Press and release **left** turn switch to advance through options	Turn signals & indicators flash to indicate the new option selected	1 flash - auto-arming disabled 2 flashes - auto-arming enabled
7	Turn **IGN** key OFF		

Alarm Sensitivity

The tamper warning has four sensitivity settings:

- Extremely low.
- Low.
- Medium.
- High.

The selection chosen controls the sensitivity of the security system in regard to short disturbances of the vehicle (i.e. someone bumps into the vehicle).

To set alarm sensitivity, refer to Alarm Sensitivity Adjustment.

Alarm Sensitivity Adjustment

STEP NO.	ACTION	WAIT FOR CONFIRMATION	NOTES
1	Turn **IGN** key **ON**-OFF-**ON**-OFF-**ON**		
2	Press **left** turn switch **2 times** and release	2 or 3 flashes turn signals & indicators depending on vehicle configuration (See BATTERY DISCONNECTS AND CONFIGURING section)	2 flashes - North American/Domestic configuration security system 3 flashes - international configuration security system
3	Press and hold **key fob** button until confirmation is received	1 flash turn signals & indicators	
4	Press **left** turn switch **1 time** and release	Turn signals & indicators flash to indicate the current option selected	1 flash - extremely low 2 flashes - low sensitivity 3 flashes - medium sensitivity 4 flashes - high sensitivity
5	Press and release **left** turn switch to advance through options	Turn signals & indicators flash to indicate the new option selected	1 flash - extremely low 2 flashes - low sensitivity 3 flashes - medium sensitivity 4 flashes - high sensitivity
6	Turn **IGN** key OFF		

Storage Mode Configuration

The security system has a special mode for long term storage. This mode prevents the security system from discharging the battery after a period of days without any ignition key switch activity. Refer to Storage Mode Options.

- If the security system is set to infinite, the system will not go into storage mode. In this case, the customer must use a trickle charger to keep the battery from discharging after 60 days of storage.
- Vehicles will enter storage mode whether the security system is armed or disarmed.

In storage mode, all alarm functions are suspended and the receiver is shut down and will not respond to the key fob. The vehicle is immobilized because the starter motor and Ignition/EFI controllers are disabled. When the storage mode is entered, the security lamp stops flashing to conserve power.

To wake up the security system from storage mode, the ignition key must be turned ON. This will trigger the alarm if the system was previously armed. You must use the key fob or personal code

to disarm the system and stop the alarm.

If the ignition is switched from ON-OFF quickly, then the security system will wake-up without activating the alarm.

To set the storage mode preferences, refer to Storage Mode Configuration.

Storage Mode Options

FLASHES	TIME
1 flash	20 days (factory settings)
2 flashes	60 days
3 flashes	90 days
4 flashes	infinite

Storage Mode Configuration

STEP NO.	ACTION	WAIT FOR CONFIRMATION	NOTES
1	Turn **IGN** key **ON**-OFF-**ON**-OFF-**ON**		
2	Press **left** turn switch **2 times** and release	2 or 3 flashes turn signals & indicators depending on vehicle configuration (See BATTERY DISCONNECTS AND CONFIGURING section)	2 flashes - North American/Domestic configuration security system 3 flashes - international configuration security system
3	Press and hold **key fob** button until confirmation is received	1 flash turn signals & indicators	
4	Release and then hold **key fob** button until confirmation is received	2 flashes turn signals & indicators	
5	Release and then hold **key fob** button until confirmation is received	3 flashes turn signals & indicators	
6	Press **left** turn switch **1 time** and release	Turn signals & indicators flash to indicate the current option selected	see Storage Mode Options table
7	Press **left** turn switch to advance through options	Turn signals & indicators flash to indicate the new option selected	see Storage Mode Options table
8	Turn **IGN** key OFF		

Key Fob Battery Replacement

Replace the key fob battery every 2 years.

1. See Key Fob Open Case: Front. Place a thin blade between the 2 halves of the key fob case and slowly turn to open.
2. See Key Fob Battery Replacement. Remove the old battery and discard.

   NOTE:

   Dispose of old battery in accordance with local regulations.

3. Install a new battery (Panasonic® 2032 or equivalent) with the positive (+) side down.
4. Verify the button rubber is fully seated.
5. Close the case by aligning the two halves and snap together.
6. While standing next to the motorcycle, press and hold the key fob button for 10-15 seconds until the security system responds with two turn signal flashes/siren chirps.

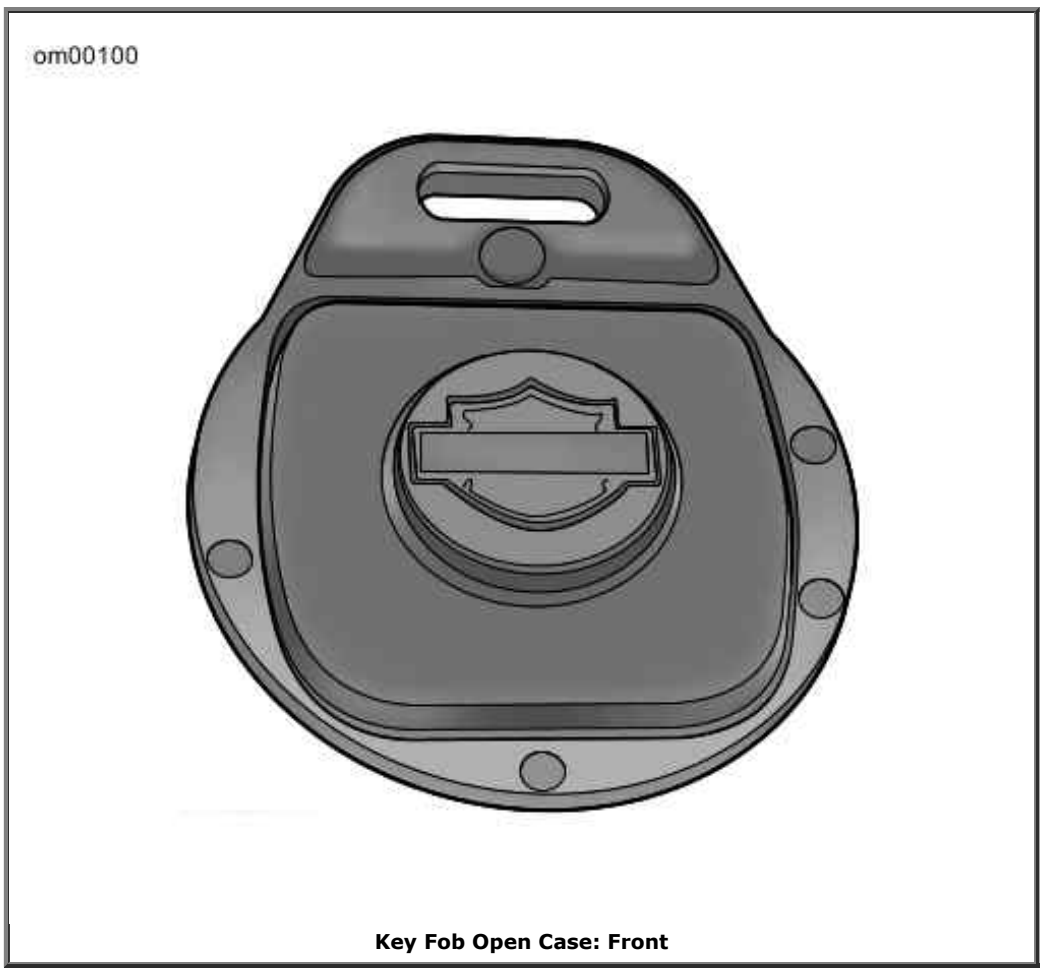

Key Fob Open Case: Front

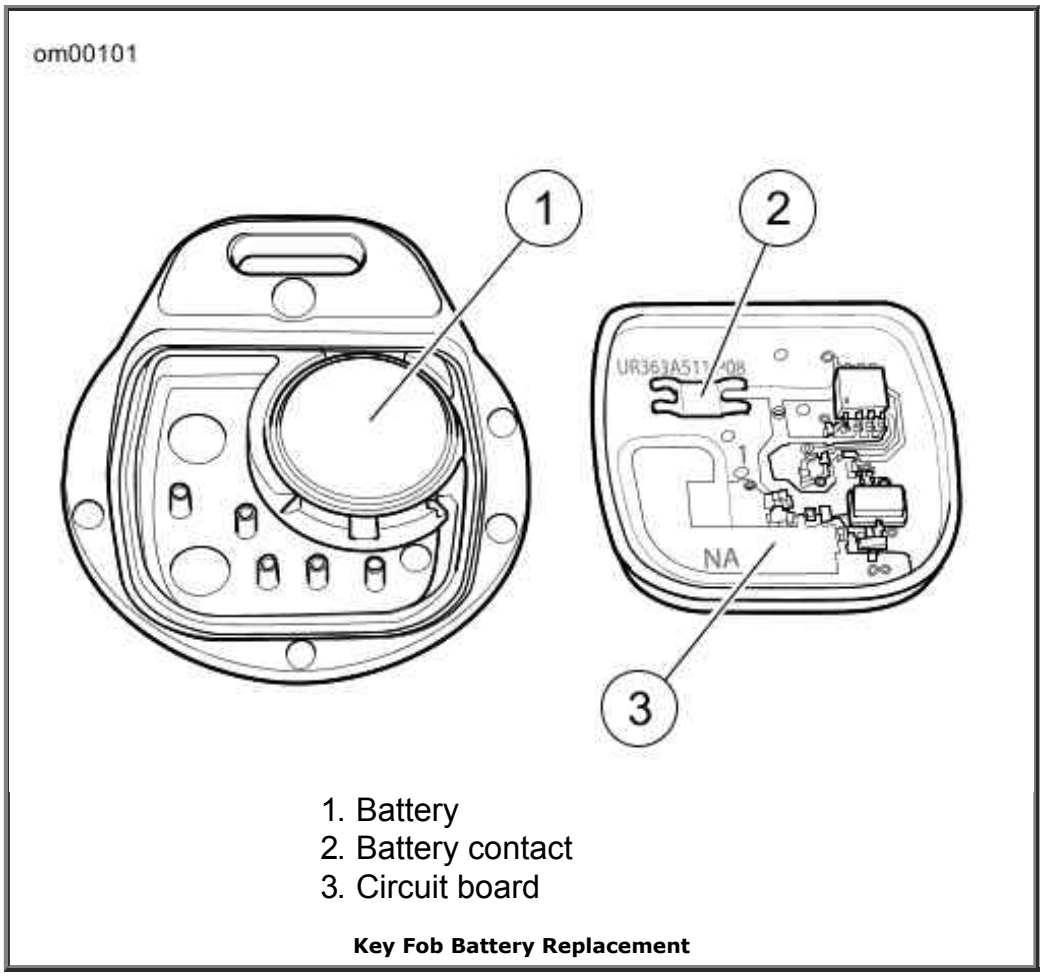

1. Battery
2. Battery contact
3. Circuit board

Key Fob Battery Replacement

Disabling the System

Disarm the security system using the key fob or personal code. At this point, the security fuse may be removed or battery disconnected.

Battery Disconnects and Configuring

After reconnecting a battery, the security system will not enter the configuration mode on the first attempt. Therefore, after all battery reconnects, the configuration sequence must be modified as follows.

1. Set run switch to **OFF**, cycle ignition key **ON**-OFF-**ON**-OFF-**ON** and press left turn signal switch twice.
2. Wait for one to three confirmation flashes of the turn signals and then set ignition key switch to **OFF**.
3. Repeat steps listed above.
4. Continue with configuration sequence listed.

Troubleshooting the Security System

If the key fob button has been pressed numerous times while away from the vehicle, the key fob may fall out of synchronization with the security system. If this happens, the security system might fail to recognize the key fobs commands.

To solve this problem, press and hold the key fob button for 10-15 seconds until the security system responds with two turn signal flashes. After confirmation, you may resume normal key fob operation.

Siren Diagnostics

- See Siren. If the siren is armed and the internal siren battery is dead, shorted, disconnected, or has been charging for a period longer than 24 hours, the siren will respond with three chirps on arming instead of two.
- The internal siren battery may not charge if the vehicle's battery is less than 12.5 volts.
- If the siren does not chirp two or three times on a valid arming command from the security system, the siren is either not connected, not working, or the siren wiring was opened or shorted while the siren was disarmed.
- If the siren enters the self-driven mode where it is powered from the siren internal 9 volt battery, the turn signal lamps may or may not alternately flash. If the security system activates the siren, the turn signal lamps will alternately flash. If the siren has been armed and a security event occurs, and the siren is in self-driven mode, the siren will alarm for 20 to 30 seconds and then turn off for 5 to 10 seconds. This alarm cycle will be repeated ten times if the siren is in the self-driven mode.

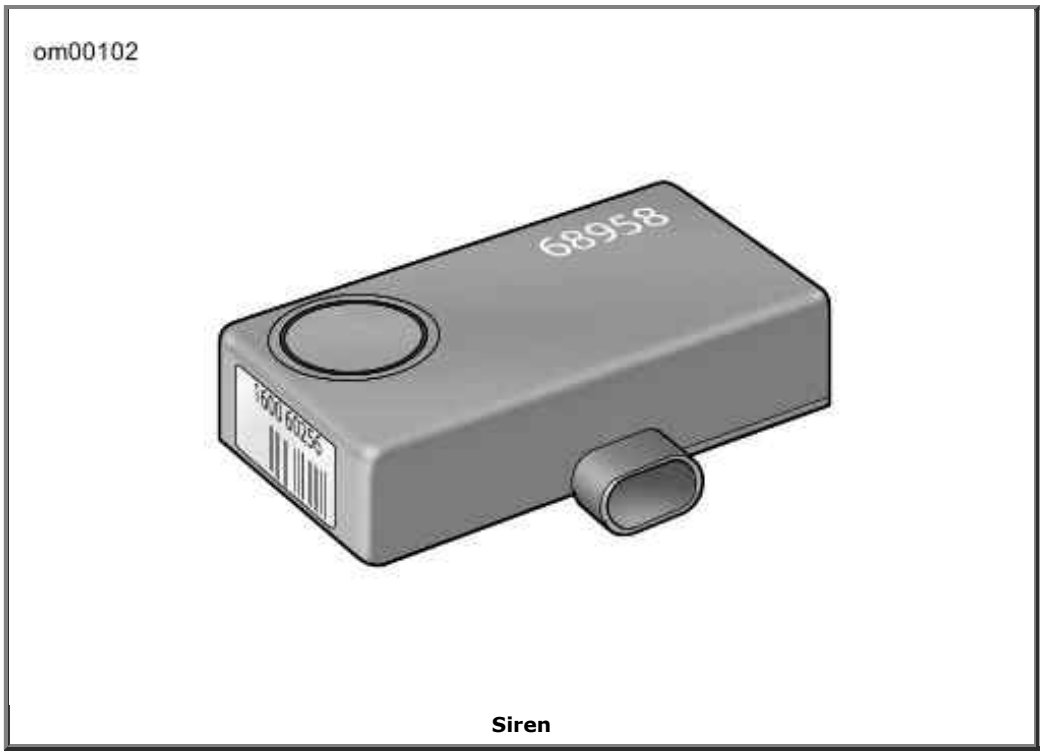

Siren

Operation

Operating Recommendations: Softail Models

CAUTION

Do not run the engine at extremely high RPM with clutch disengaged or transmission in neutral. Running an engine at high RPM can result in engine damage. (00177a)

- The maximum recommended safe engine speed is 5500 RPM.
- Do not idle engine unnecessarily for more than a few minutes with motorcycle standing still.

CAUTION

Do not exceed the maximum safe RPM specified below under any conditions. Exceeding the maximum safe engine RPM can result in equipment damage. (00248a)

NOTE:

The maximum recommended engine speed for Softail model motorcycles is 5500 RPM.

CAUTION

Air-cooled engines require air movement over the cylinders and heads to maintain proper operating temperature. Extended periods of idling or parade duty can overheat the engine, resulting in serious engine damage. (00178a)

An engine running long distances at high speed must be given closer than ordinary attention to avoid overheating and possible engine damage.

This applies particularly to a motorcycle equipped with windshield and fairing.

NOTE:

Have the engine checked regularly and keep it well tuned.

⚠WARNING

When riding on wet roads, brake efficiency and traction are greatly reduced. Failure to use care when braking, accelerating or turning on wet roads can cause loss of control, which could result in death or serious injury. (00041a)

NOTE:

When descending upon a long, steep grade, downshift and use engine compression together with intermittent application of both brakes to slow the motorcycle.

⚠WARNING

Continuous use of brake causes overheating and reduced efficiency, which could result in death or serious injury. (00042a)

CAUTION

Do not coast for long distances with the engine off. The transmission is properly lubricated only when the engine

is running. Coasting long distances can result in transmission damage. (00180a)

⚠WARNING

Do not tow a disabled motorcycle. Towing can adversely affect stability and handling, which could result in death or serious injury. (00017a)

Break-in Riding Rules

The First 500 Miles (800 Kilometers)

The sound design, quality materials and workmanship that are built into your new Harley-Davidson will give you optimum performance right from the start.

To allow your engine to seat in its critical parts we recommend for the first 500 miles (800 kilometers) you observe the riding rules provided below. Adherence to these recommendations will help to assure good future durability and performance.

1. While riding the first 50 miles (80 kilometers) avoid operating at any steady engine speed for long distances. Keep the engine speed below 3000 RPM in any gear. Do not lug the engine in higher gears by running or accelerating at very low RPM. Do not exceed speed for each gear as noted in Break-in Speeds: 0-50 Miles (0-80 Kilometers).

2. Up to 500 miles (800 kilometers), avoid operating at any steady engine speed for long distances. Engine speed up to 3500 RPM in any gear is permissible. Do not exceed speed for each gear as noted in Break-in Speeds: 50-500 Miles (80-800 Kilometers).

3. Avoid fast starts at wide open throttle. Drive slowly until the engine has warmed up.

4. Avoid hard braking. New brakes need to be broken-in by moderate use for the first 200 miles (300 kilometers).

Break-in Speeds: 0-50 Miles (0-80 Kilometers)

SPEED	GEAR				
	1st	2nd	3rd	4th	5th
MPH	22	32	45	57	70
KPH	35	51	72	92	113

Break-in Speeds: 50-500 Miles (80-800 Kilometers)

SPEED	GEAR				
	1st	2nd	3rd	4th	5th
MPH	25	37	52	66	80
KPH	40	60	84	106	129

Pre-Riding Checklist

⚠WARNING

Read the CONTROLS AND INDICATORS section before riding your motorcycle. Failure to understand the operation of the motorcycle could result in death or serious injury. (00043a)

Before riding your motorcycle at any time, make a general inspection to be sure it is in safe riding condition.

⚠WARNING

Stop the engine when refueling or servicing the fuel system. Do not smoke or allow open flame or sparks near gasoline. Gasoline is extremely flammable and highly explosive, which could result in death or serious injury. (00002a)

⚠WARNING

Avoid spills. Slowly remove filler cap. Do not fill above bottom of filler neck insert, leaving air space for fuel expansion. Secure filler cap after refueling. Gasoline is extremely flammable and highly explosive, which could result in death or serious injury. (00028a)

⚠WARNING

Use care when refueling. Pressurized air in fuel tank can force gasoline to escape through filler tube. Gasoline is extremely flammable and highly explosive, which could result in death or serious injury. (00029a)

1. Verify fuel is present in tank and add fuel if required.
2. Adjust mirrors to proper riding positions.
3. Verify oil is present in oil tank.
4. Check controls to make sure they operate properly. Operate the front and rear brakes, throttle, clutch and shifter. All controls should operate freely without binding.
5. Check steering for proper operation by turning the handlebars through the full operating range. Handlebars should turn smoothly without binding.

⚠WARNING

Be sure tires are properly inflated, balanced and have adequate tread. Inspect your tires regularly and see a Harley-Davidson dealer for replacements. Riding with excessively worn, unbalanced or under-inflated tires can adversely affect stability and handling, which could result in death or serious injury. (00014a)

6. Check tire condition and pressure. Incorrect pressure will result in poor riding characteristics and can affect handling and stability. Refer to tire specifications for correct inflation pressure to use.
7. Check all electrical equipment and switches including the headlamp, stop lamp, turn signals and horn for proper operation.
8. Check for any fuel, oil or hydraulic fluid leaks.
9. Check secondary belt for wear or damage.
10. Service your motorcycle as necessary.

Starting the Engine: Carbureted Models

⚠WARNING

Shift transmission to neutral before starting engine to prevent accidental movement, which could result in death or serious injury. (00044a)

CAUTION

The engine should be allowed to run slowly for 15-30 seconds. This will allow the engine to warm up and let oil reach all surfaces needing lubrication. Failure to comply can result in engine damage. (00181a)

NOTE:

Engine off/run switch on the right handlebar control group must be in RUN (ignition ON) position to start engine.

Refer to Recommended Engine Oils. Use the recommended oil for extended or expected temperatures.

If you read this section and still have questions about the correct operation of your motorcycle, talk to an authorized Harley-Davidson dealer.

C.V. Carburetors

NOTES:

- *C.V. carburetors have an enrichener circuit that will cause the engine to idle at approximately 2000 RPM with the engine at normal operating temperature and the enrichener knob pulled fully-out.*
- *The increase in idle speed is intended to alert the rider that the engine is warmed up to*

normal operating temperature and the enrichener knob should be pushed all the way in.
- *Continuing to use the enrichener when the engine is at full operating temperature WILL CAUSE FOULED SPARK PLUGS.*

CAUTION

Pay close attention to the vehicle's warm-up time. Either excessive or insufficient use of the enrichener may cause poor performance, erratic idle, poor fuel economy, spark plug fouling and equipment damage. (00164a)

NOTE:

The following starting and operating instructions for all Harley-Davidson motorcycles are recommendations. They may be modified for individual vehicles.

Cool Engine

Outside Temperature Cooler Than 60° F (16° C)

1. Turn the fuel valve to the ON position.
2. BE SURE THROTTLE IS CLOSED.
3. Pull enrichener knob to full-out position.
4. Turn the ignition/headlamp key switch ON and press starter switch to operate the electric starter.
5. Raise jiffy stand.
6. After initial 15-30 second warm-up, ride for 3 minutes or 2 miles (3.2 kilometers) with enrichener knob in full-out position.
7. After 3 minutes or 2 miles (3.2 kilometers), push the enrichener knob in to the 1/2 way position. Ride 2 minutes or 2 miles (3.2 kilometers).
8. After 2 minutes or 2 miles (3.2 kilometers), push the enrichener knob fully-in.

NOTE:

If outside temperature is cooler than 20° F (7° C) it may be necessary to roll the throttle 2 or 3 times.

Outside Temperature Warmer Than 60° F (16° C)

1. Turn the fuel valve to the ON position.
2. BE SURE THROTTLE IS CLOSED.
3. Pull enrichener knob to full-out position.
4. Turn the ignition/headlamp key switch on and press starter switch to operate the electric starter.
5. Raise jiffy stand.

6. After initial 15-30 second warm-up, ride for 1 minute or 1/2 mile (0.8 kilometer) with enrichener knob in full-out position.
7. After 1 minute or 1/2 mile (0.8 kilometer), push the enrichener knob in to the 1/2 way position. Ride 1 minute or a 1/2 mile (0.8 kilometer).
8. After 1 minute or 1/2 mile (0.8 kilometer), push the enrichener knob fully-in.

Warm or Hot Engine

1. Turn the fuel valve to the ON position.
2. Open throttle 1/8-1/4 turn.
3. Turn on ignition/headlamp key switch and operate electric starter. DO NOT USE ENRICHENER.
4. Raise jiffy stand.

NOTE:

If the engine does not start after a few turns or if one cylinder fires weakly but engine does not start, it is usually because of an over-rich (flooded) condition. This is especially true of a hot engine. If the engine is flooded, push enrichener knob in all the way, turn ignition on and operate starter with throttle wide open. DO NOT pump the throttle while turning the engine over.

Starting the Engine: EFI Models

General

CAUTION

The engine should be allowed to run slowly for 15-30 seconds. This will allow the engine to warm up and let oil reach all surfaces needing lubrication. Failure to comply can result in engine damage. (00181a)

There are some differences between a carbureted Harley-Davidson and a fuel injected Harley-Davidson. The sequential port fuel injection system simplifies the starting procedure, compared to carbureted Harley-Davidsons.

Do not roll the throttle before starting. Rolling the throttle before starting the motorcycle is unnecessary.

There is no choke or enrichener or fuel supply valve on a fuel injected Harley-Davidson. The engine management system handles starting and running the engine at all temperatures and conditions.

Starting

⚠WARNING

Shift transmission to neutral before starting engine to prevent accidental movement, which could result in death or serious injury. (00044a)

1. Turn ignition/headlamp key switch to IGNITION position. Do not roll the throttle.

   NOTE:

   The engine lamp will light for approximately 4 seconds and you will hear the fuel pump purr for approximately 2 seconds as it operates to fill the fuel lines with gasoline.

2. See Right Handlebar Controls. Turn the off/run switch to RUN position.
3. Press the starter button to start the motorcycle.
4. When the engine has started, you can operate your motorcycle as you normally would after raising the jiffy stand.

NOTE:

If the fuel tank becomes completely dry, it may take a few seconds longer to start the motorcycle after filling the tank. It will not be necessary to take any extraordinary measures before starting the motorcycle.

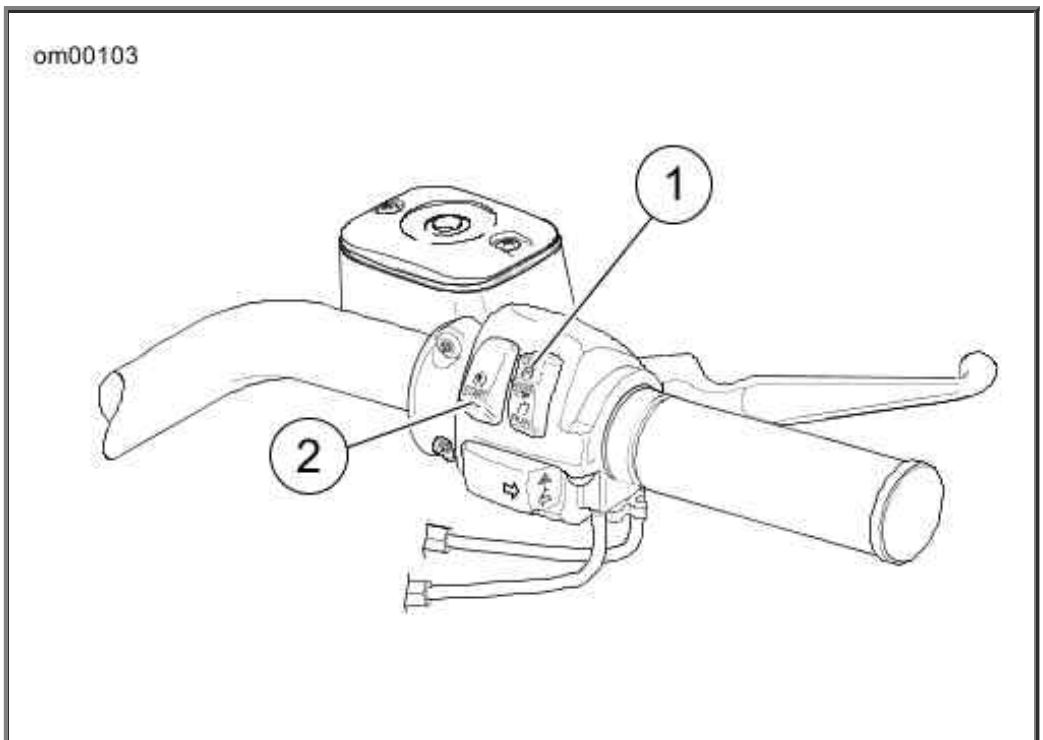

1. Engine off/run switch
2. Engine start switch

Right Handlebar Controls

EFI Engine Heat Management

Injected Twin Cam High Temperature Idle

Fuel injected Twin Cam engines use a three phase heat management system to reduce engine temperature under extreme conditions. A rider with a very hot engine may notice the affects of this three phase heat management system and incorrectly assume an idle problem exists.

- **Phase 1:** When the engine temperature sensor signals that the cylinder head has reached approximately 320° F (160° C) the ECM will gradually reduce engine idle speed until the engine temperature drops or the engine reaches 800 RPM.
- **Phase 2:** If engine temperature reaches 338° F (170° C), the ECM richens the air/fuel ratio to provide additional cooling.
- **Phase 3:** If the engine temperature reaches 356° F (180° C), fuel injector pulses are interrupted. The air drawn in and expelled helps cool the engine further. Since there is no combustion it would be perceived as a misfire. This third stage will only happen when the motorcycle is stationary.

Stopping the Engine

1. Stop the engine by turning OFF the engine stop switch on right handlebar.
2. Turn OFF the ignition/headlamp key switch. If the engine should be stalled or stopped in any way, turn off the ignition/headlamp key switch at once to prevent battery discharge.
3. Turn the fuel valve to the OFF position if applicable.

Shifting Gears

Getting Started

CAUTION

The clutch must be fully disengaged before attempting a gear shift. Failure to fully disengage the clutch can result in equipment damage. (00182a)

Gear shift pattern is first gear down, next four gears up.

NOTE:

Always start engine with transmission in neutral. Always start motorcycle forward motion from first gear.

1. With motorcycle engine running and jiffy stand retracted, pull the clutch hand lever in against handlebar grip to fully disengage clutch.
2. Push the foot shift lever down to end of its travel and release. The transmission is now in first gear.
3. To start forward motion, release the clutch lever slowly to engage the clutch and at the same time, open throttle gradually.

Upshift (Acceleration)

Refer to Upshift (Acceleration) Gear Speeds. Engage second gear after the motorcycle has reached at the appropriate shifting speed.

Upshift (Acceleration) Gear Speeds

GEAR CHANGE	MPH	KPH
First to second	15	25
Second to third	25	40
Third to fourth	35	55
Fourth to fifth	45	70

1. Close the throttle.
2. Disengage the clutch (pull clutch lever in).
3. See Shifting Sequence: Upshift. Lift the gear shift lever up to the end of its travel and release.
4. Engage the clutch (release clutch lever) and gradually open the throttle.
5. Repeat the previous steps to engage third, fourth, and fifth gears.

NOTES:

- *Disengage the clutch completely before each gear change.*
- *Partially close the throttle so the engine will not drag when clutch is again engaged (clutch lever released).*

Downshift (Deceleration)

⚠WARNING

Do not downshift at speeds higher than those listed in the Changing Gear Speeds table. Shifting to lower gears when speed is too high can cause the rear wheel to lose traction and lead to loss of vehicle control, which could result in death or serious injury. (00045a)

Gear shift pattern is first gear down; next four gears up. Refer to Downshift (Deceleration) Gear Speeds for shifting speeds.

Downshift (Deceleration) Gear Speeds

GEAR CHANGE	MPH	KPH
Fifth to fourth	40	65
Fourth to third	30	50
Third to second	20	30
Second to first	10	15

NOTE:

The shifting points shown in the tables constitute a recommendation. Vehicle owners may determine that their own individual shifting patterns may differ than those stated and are additionally appropriate for individual riding styles.

See Shifting Sequence: Downshift. When engine speed decreases, as in climbing a hill or running at a reduced speed, shift to the next lower gear while partially closing the throttle so the engine accelerates as soon as the clutch lever is released.

NOTES:

- *Disengage the clutch completely before each gear change.*
- *Partially close the throttle so the engine will not drag when clutch is again engaged (clutch lever released).*

CAUTION

Shift to neutral before stopping engine. Shifting mechanism can be damaged by shifting gears while engine is stopped. (00183a)

The gear shifter mechanism permits shifting the transmission to neutral from either first or second gear.

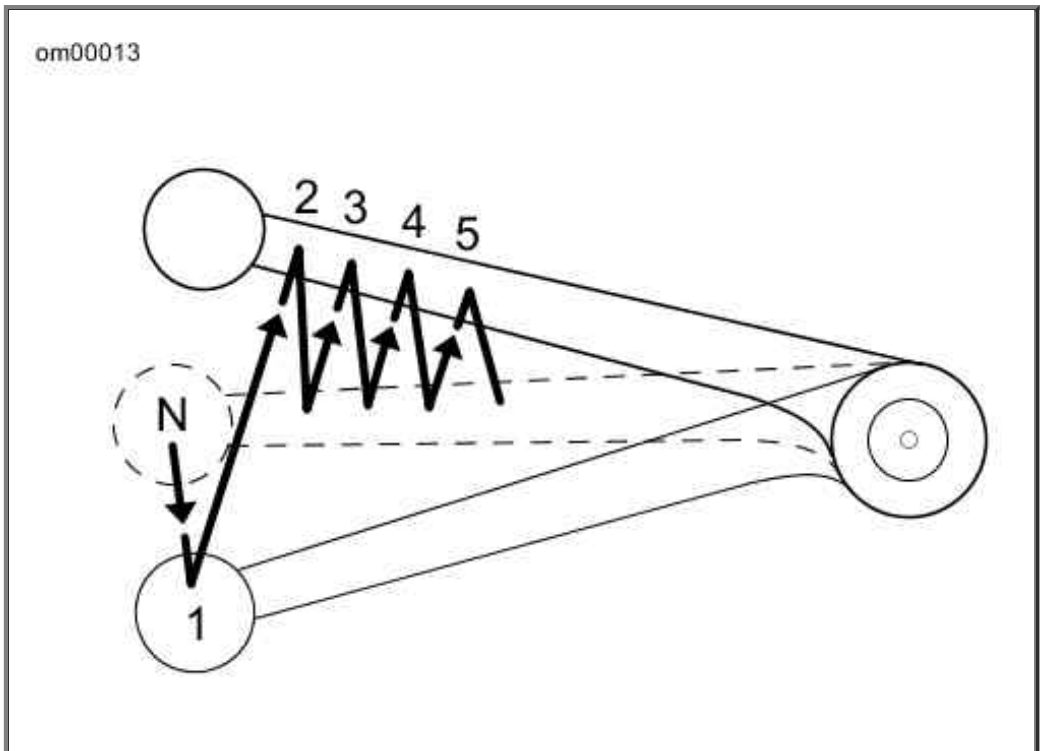

Shifting Sequence: Upshift

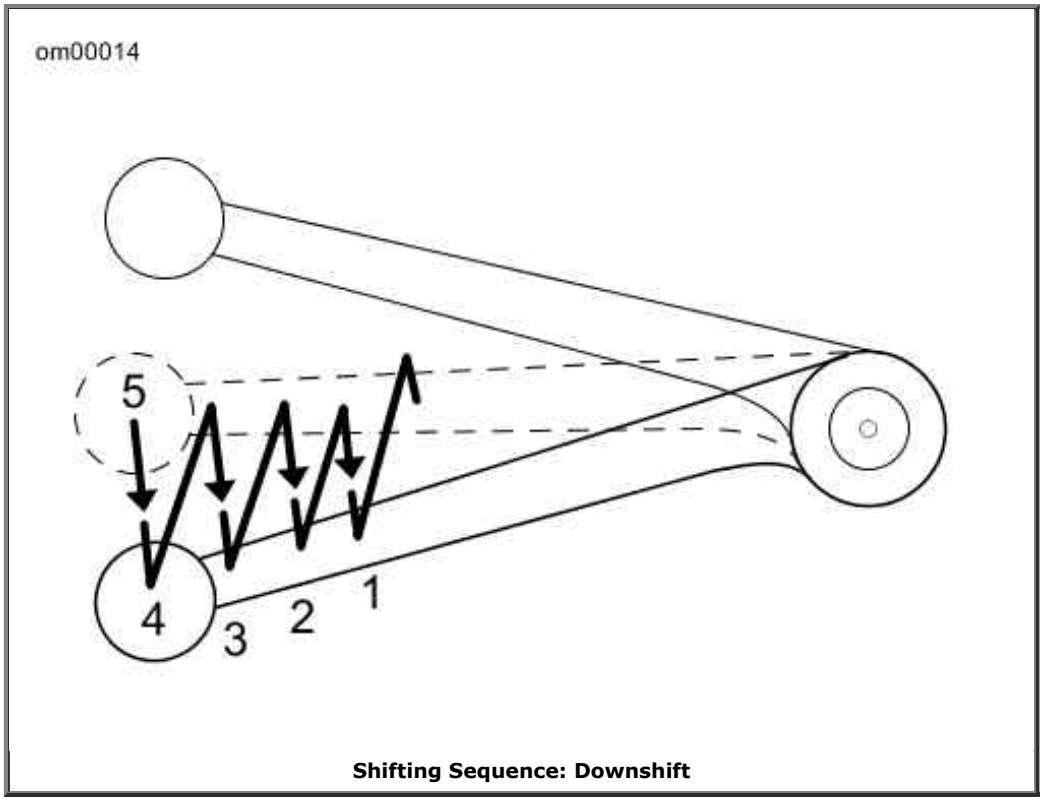

Shifting Sequence: Downshift

Maintenance and Lubrication

Safe Operating Maintenance

⚠WARNING

Perform the service and maintenance operations as indicated in the regular service interval table. Lack of regular maintenance at the recommended intervals can affect the safe operation of your motorcycle, which could result in death or serious injury. (00010a)

Good maintenance creates a safe motorcycle. A careful check of certain equipment must be made after periods of storage. Also, frequently inspect the motorcycle between the regular service intervals to determine if additional maintenance is necessary.

Check the following items:

1. Tires for correct pressure, abrasions or cuts.
2. Belt and primary chain for proper tension, wear or damage.
3. Brakes, steering and throttle for responsiveness and freedom from binding.
4. Brake fluid level and condition. Hydraulic lines and fittings for leaks. Also, check brake pads and discs for wear.
5. Cables for fraying or crimping and free operation.
6. Engine oil and primary chaincase/transmission fluid levels.

7. Headlamp, tail lamp, brake lamp and turn signals for proper operation.

NOTE:

Refer to the side view photographs in the front of this manual to locate the items discussed in this section.

Break-in Maintenance: Softail Models

NOTE:

The performance of new motorcycle initial service is required to keep your new motorcycle warranty in force and to assure proper emissions system operation.

Refer to Regular Service Intervals: 2005 Softail Models. After a new motorcycle has been ridden its first 1000 miles (1600 kilometers), it should be taken to the dealer from whom it was purchased for initial service operations.

NOTE:

Because of unique design features, Springer models require the first scheduled maintenance at 500 miles (800 kilometers).

Engine Lubrication

CAUTION

Do not switch lubricant brands indiscriminately because some lubricants interact chemically when mixed. Use of inferior lubricants can damage the engine. (00184a)

Engine oil is a major factor in the performance and service life of the engine. Always use the proper grade of oil for the lowest temperature expected before the next scheduled oil change. Refer to Recommended Engine Oils. Your authorized dealer has the proper oil to suit your requirements.

If it is necessary to add oil and Harley-Davidson oil is not available, use an oil certified for diesel engines. Acceptable diesel engine oil designations include: CF-4, CG-4, CH-4 and CI-4.

The preferred viscosities for the diesel engine oils in descending order are: 20W50, 15W40 and 10W40.

At the first opportunity, see an authorized dealer to change back to 100 percent Harley-Davidson oil.

Recommended Engine Oils

H-D TYPE	VISCOSITY	H-D RATING	LOWEST AMBIENT TEMPERATURE	COLD WEATHER STARTS BELOW 50 F (10 C)
H-D Multi-grade	SAE 10W40	HD 360	Below 40 F (4 C)	Excellent
H-D Multi-grade	SAE 20W50	HD 360	Above 40 F (4 C)	Good
H-D Regular Heavy	SAE 50	HD 360	Above 60 F (16 C)	Poor
H-D Extra Heavy	SAE 60	HD 360	Above 80 F (27 C)	Poor

Checking Oil Level: Softail Models

CAUTION

Oil level cannot be accurately measured on a cold engine. For pre-ride inspection, with motorcycle leaning on jiffy stand on level ground, oil should register on dipstick between arrows when engine is cold. Do not add oil to bring the level to the FULL mark on a COLD engine. (00185a)

For dipstick location, see Checking Oil Tank Level: Softail Models.

NOTE:

The motorcycle should be on jiffy stand when checking oil level.

Oil Level Cold Check

Perform engine oil level **COLD CHECK** as follows:

1. For preride inspection with the vehicle on jiffy stand on level ground, wipe off the dipstick and insert it back into the oil tank with the plug pushed completely into the fill spout.
2. Remove the dipstick and verify oil registers on the dipstick between the two marks.
    a. See Engine Oil Level: Softail Models. If oil level registers on the dipstick, proceed to Oil Level Hot Check.
    b. If oil does not register on the dipstick, proceed to step 3.
3. With the dipstick removed, look into the dipstick opening and verify the oil level is at the filler neck weld.
    a. If the oil level is at or near the filler neck weld, proceed to Oil Level Hot Check.
    b. If the oil level is not at or near the filler neck weld, add only enough oil to bring the level to the filler neck weld. Then proceed to Oil Level Hot Check.

Oil Level Hot Check

Perform engine oil level **HOT CHECK** as follows:

1. Ride motorcycle until engine is at normal operating temperature.
2. With the vehicle upright on level ground, allow engine to idle for 1-2 minutes. Turn engine off.
3. With vehicle on jiffy stand remove and wipe off the dipstick. Insert dipstick back into the oil tank with the plug pushed completely into the filler neck.
4. Remove the dipstick and note the level of the oil. Add only enough oil to bring the level to the FULL mark on the dipstick. Do not overfill.

   NOTE:

   Refer to Recommended Engine Oils. Use only recommended oil specified under Engine Lubrication.

5. Start engine and carefully check for oil leaks around drain plug and oil filter.

Engine oil level should be checked only when engine is at normal operating temperature.

NOTE:

The engine will require a longer warm up period in colder weather.

CAUTION

Do not allow hot oil level to fall below Add/Fill mark on dipstick. Doing so can result in equipment damage and/or equipment malfunction. (00189a)

CAUTION

Do not overfill oil tank. Doing so can result in oil carryover to the air cleaner leading to equipment damage and/or equipment malfunction. (00190a)

- Check engine oil supply at each complete fuel refill.
- Refer to Regular Service Intervals: 2005 Softail Models. Oil should be changed at proper intervals in normal service at warm or moderate temperatures.
- Oil change intervals should be shorter in cold weather. See Winter Lubrication.

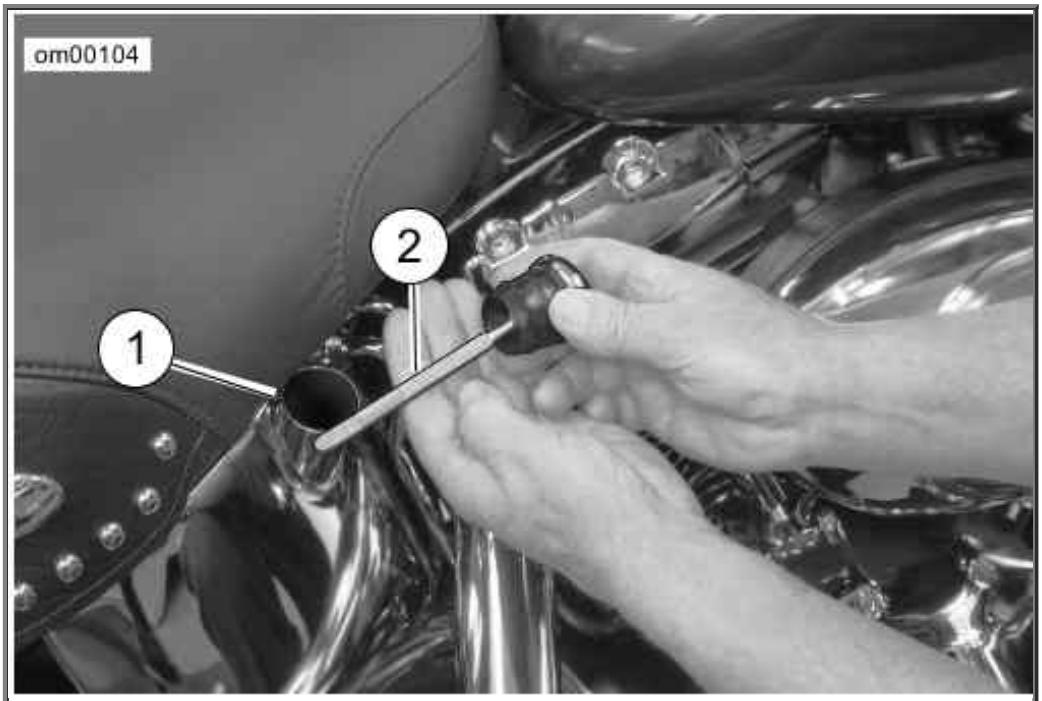

1. Filler neck
2. Dipstick

Checking Oil Tank Level: Softail Models

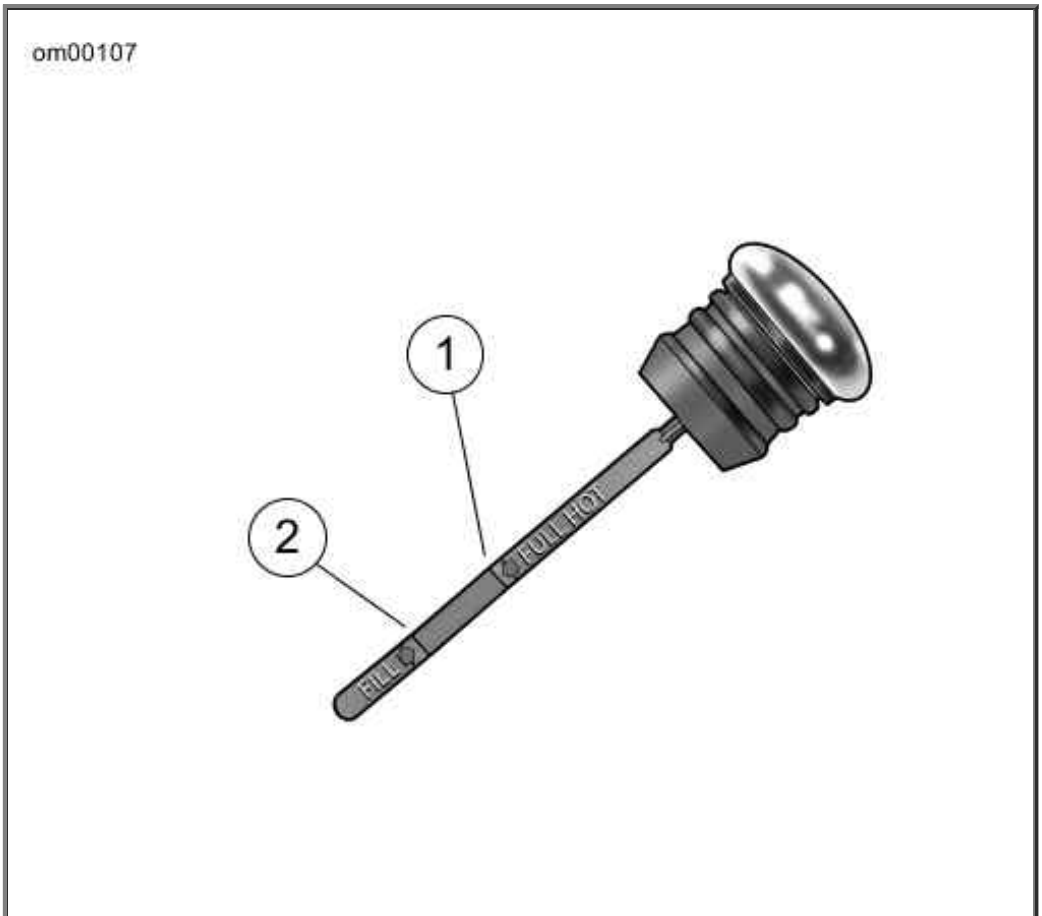

1. Full mark
2. Fill mark

Engine Oil Level: Softail Models

Changing Oil and Oil Filter: Softail Models

Oil filter is located on an oil filter mount in front of the engine.

CAUTION

Do not switch lubricant brands indiscriminately because some lubricants interact chemically when mixed. Use of inferior lubricants can damage the engine. (00184a)

⚠WARNING

Be sure that no lubricant gets on tires, wheels or brakes when changing fluid. Traction can be adversely affected, which could result in loss of control of the motorcycle and death or serious injury. (00047c)

Twin Cam 88B equipped vehicles require the premium oil filter (Part No. 63798-99 Chrome or Part No. 63731-99 Black).

1. See Checking Oil Tank Level: Softail Models. Remove the oil filler plug/dipstick by pulling steadily while moving plug back and forth.

2. See Oil Tank Drain Plug: Softail Models. Remove engine oil drain plug with o-ring (2). Allow oil to completely drain into a suitable container.

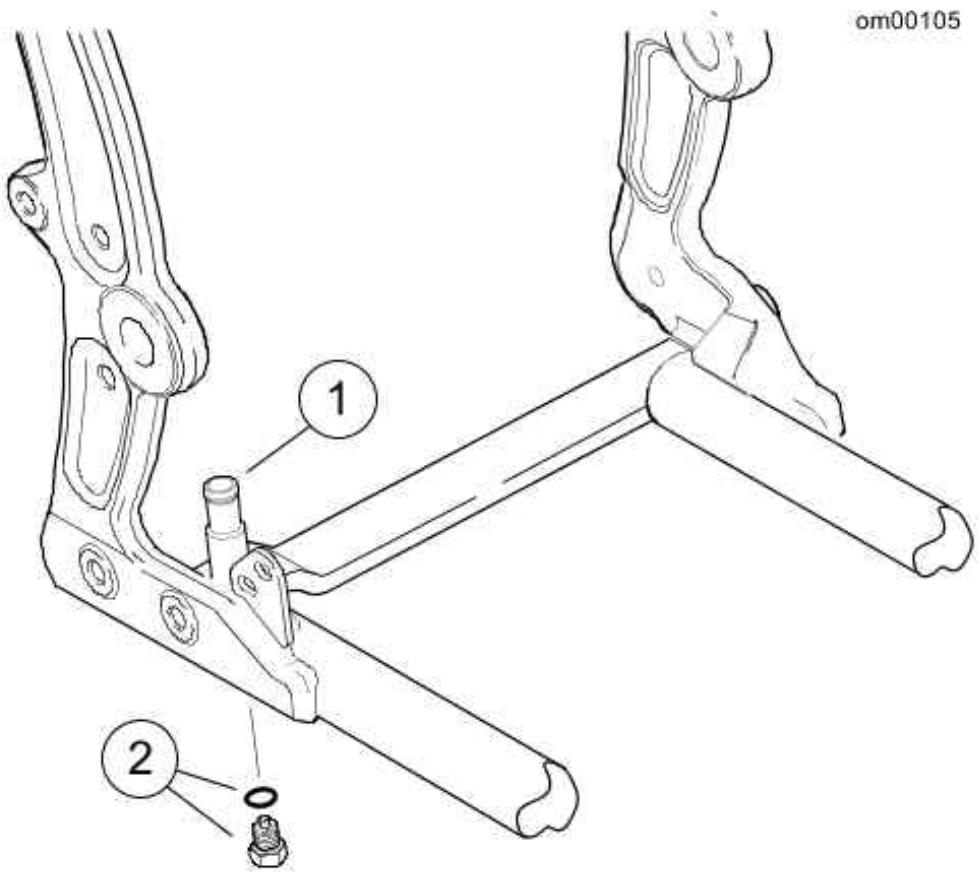

1. Frame connection for oil tank drain hose
2. Oil tank drain plug and o-ring

Oil Tank Drain Plug: Softail Models

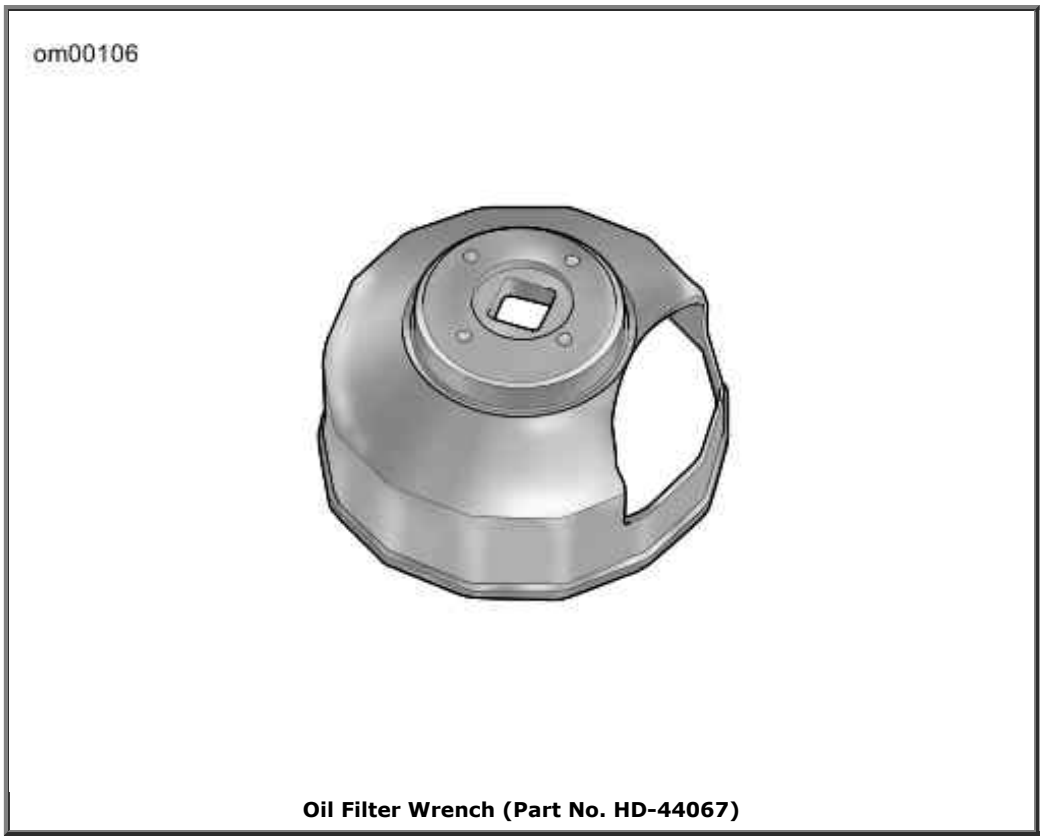

Oil Filter Wrench (Part No. HD-44067)

CAUTION

Use Harley-Davidson OIL FILTER WRENCH for filter removal. This tool can prevent damage to crankshaft position sensor and/or sensor cable. (00192a)

NOTE:

Dispose of oil and oil filter in accordance with local regulations.

3. See Oil Filter Wrench (Part No. HD-44067). Remove the oil filter using the OIL FILTER WRENCH HD-44067 . Clean the oil filter mount flange of any old gasket material (surface should be smooth and free of any debris or old gasket material).

4. Inspect o-ring for tears or damage. Replace if required. Wipe any foreign material from plug.

5. Install o-ring and drain plug and tighten to 14-21 ft-lbs (19.0-28.5 Nm).

6. See Applying Thin Oil Film. Apply a thin film of oil to gasket contact surface on mounting plate, gasket and new oil filter.

7. Screw filter onto adapter until gasket contacts plate surface, then apply another 3/4-1 full turn.

8. Fill oil tank with no more than 3.5 quarts (3.3 liters) of oil. Use the proper grade of oil for the lowest temperature expected before next oil change.

CAUTION

Do not overfill oil tank. Doing so can result in oil carryover to the air cleaner leading to equipment damage and/or equipment malfunction. (00190a)

9. Start engine and carefully check for oil leaks around drain plug and oil filter.
10. Check engine oil level.

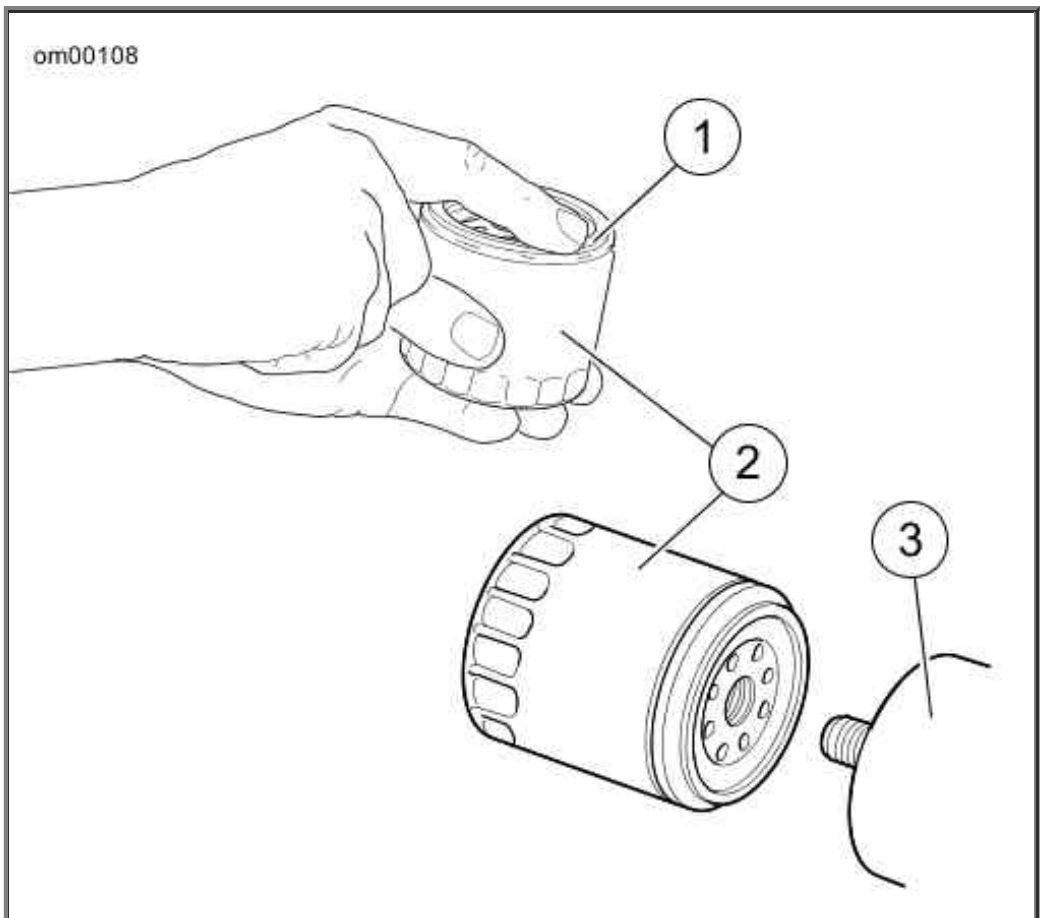

1. Thin oil film ONLY
2. Oil filter
3. Mounting plate

Applying Thin Oil Film

Winter Lubrication

In colder climates, the engine oil change interval should be shorter than normal. Motorcycles used only for short runs must have the engine oil changed more frequently and have a thorough tank flush-out before **new** oil is put in. See an authorized dealer.

NOTE:

The further below freezing the temperature drops, the shorter the oil change interval should be.

Water vapor is a normal by-product of combustion in any engine. During cold weather operation, some of the water vapor condenses to liquid form on the cool metal surfaces inside the engine. In freezing weather this water will become slush or ice and, if allowed to accumulate too long, may block the oil lines and cause damage to the engine.

If the engine is run frequently and allowed to thoroughly warm up, most of this water will become vapor again and will be blown out through the crankcase breather.

If the engine is not run frequently and allowed to thoroughly warm up, this water will accumulate, mix with the engine oil and form a sludge that is harmful to the engine.

Transmission Lubrication

The transmission lubricant level should be checked monthly.

Refer to Regular Service Intervals: 2005 Softail Models. The transmission should be drained and refilled with fresh lubricant at proper intervals.

NOTE:

When checking the transmission lubricant level, motorcycle should be standing STRAIGHT UP, not leaning on the jiffy stand. Keep motorcycle upright for a short period of time to equalize lubricant level in the transmission compartments.

Check Lubricant Level

1. Ride motorcycle until engine is warmed up to normal operating temperature.
2. When the engine reaches normal operating temperature, turn the engine off and position motorcycle STRAIGHT UP and LEVEL.
3. See Transmission Filler Plug/Dipstick Lubricant Level. Remove the threaded filler plug/dipstick by turning the plug counterclockwise and pulling outward.
4. Wipe off filler plug/dipstick. Place in filler hole and remove. (Dipstick should rest on lip of filler. Do not screw in tight. Lubricant level should be at the F(ULL) mark on the plug/dipstick when removed.)

   NOTE:

   Lubricant level should be between the two marks on the dipstick.

   ⚠WARNING

   Be sure that no lubricant gets on tires, wheels or brakes when changing fluid. Traction can be adversely affected, which could result in loss of control of the motorcycle and death or serious injury. (00047c)

   CAUTION

   When draining or adding lubricant, do not allow dirt, debris or other contaminants to enter the engine. (00198a)

5. Add lubricant, if necessary. Do not overfill or leakage may occur.

   NOTES:
   - *When filling the transmission, use Harley-Davidson TRANSMISSION LUBRICANT (Part No. 99892-84 quart or 99891-84 gallon).*
   - *The transmission fluid capacity is approximately 24 ounces (0.71 liters).*
   - *Inspect o-ring for tears or damage. Replace if required. Wipe any foreign material from plug.*

6. Install threaded filler plug/dipstick and tighten to 25-75 in-lbs (2.8-8.5 Nm).

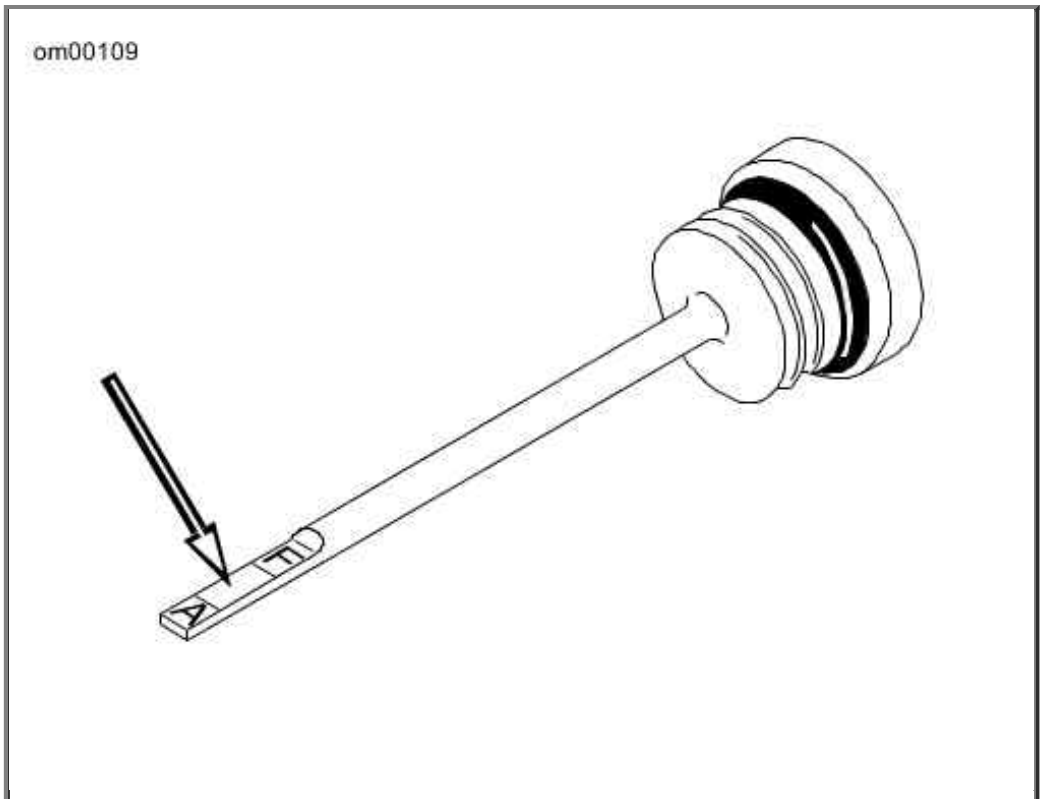

Transmission Filler Plug/Dipstick Lubricant Level

Changing Transmission Fluid

1. See Transmission Lubricant Check/Fill. Remove the threaded check/fill plug.
2. See Transmission Drain Plug and O-ring. Remove transmission drain plug and drain lubricant into a suitable container.

CAUTION

When draining or adding lubricant, do not allow dirt, debris or other contaminants to enter the engine. (00198a)

NOTE:

Do not overfill or leakage may occur. The transmission fluid capacity is approximately 24 ounces (0.71 liters).

⚠WARNING

Be sure that no lubricant gets on tires, wheels or brakes when changing fluid. Traction can be adversely affected, which could result in loss of control of the motorcycle and death or serious injury. (00047c)

NOTE:

Dispose of transmission lubricant in accordance with local regulations.

3. Inspect o-ring for tears or damage on the drain plug. Replace if required. Wipe any foreign material from plug.

4. Install drain plug and tighten to 14-21 ft-lbs (19.0-28.5 Nm).

5. Fill the transmission with 20-24 oz. (591-710 ml) of Harley-Davidson TRANSMISSION LUBRICANT (Part No. 99892-84 quart or 99891-84 gallon).

6. Install threaded filler/check plug and tighten to 25-75 in-lbs (2.8-8.5 Nm).

7. Start engine and carefully check for oil leaks around drain plug.

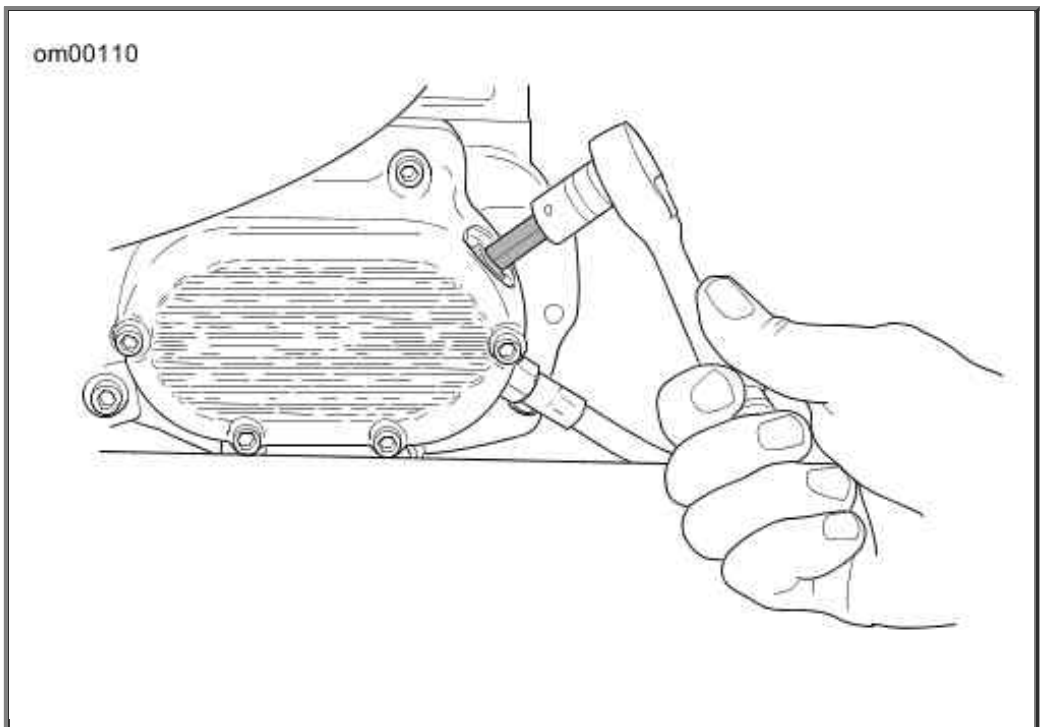

Transmission Lubricant Check/Fill

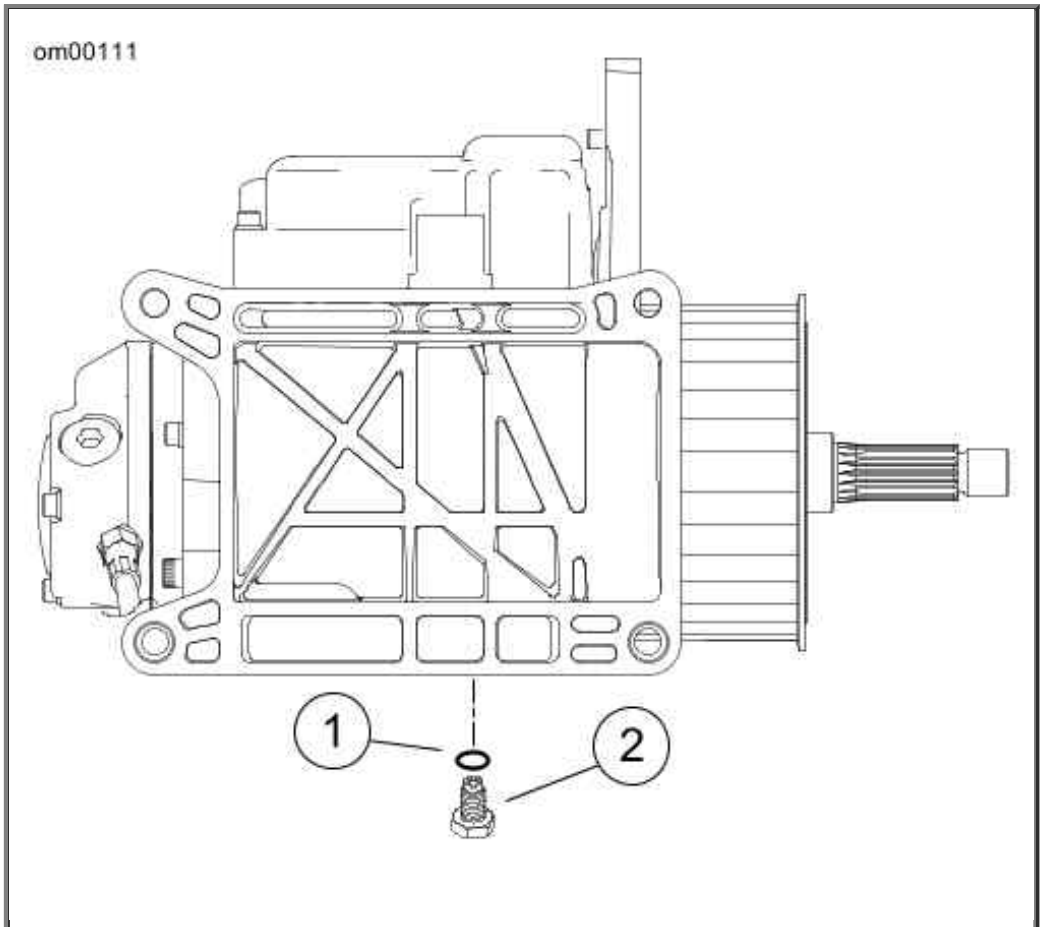

1. O-ring
2. Transmission drain plug

Transmission Drain Plug and O-ring

Primary Chaincase Lubrication

Lubrication is a major factor in the performance and service life of the clutch components. Use the appropriate Harley-Davidson chaincase lubricant for all operating temperatures.

NOTE:

For model specific information regarding the primary chaincase capacity, refer to the appropriate Service Manual or see a Harley-Davidson dealer.

Primary Chain Adjustment

Refer to Regular Service Intervals: 2005 Softail Models. Primary (front) chain adjustment should be inspected at proper intervals.

NOTE:

If the chain is allowed to run loose, it will cause the motorcycle to jerk when running at low speed, and chain and sprockets will wear excessively. If this happens, see a Harley-Davidson dealer or proceed as follows.

⚠WARNING

To prevent accidental vehicle start-up, which could cause death or serious injury, disconnect negative (-) battery

cable before proceeding. (00048a)

1. Remove seat. Unthread bolt and remove battery negative cable (black) from battery negative (-) terminal. See Battery: Softail Models.

2. See Primary Chaincase Cover. On the left side of the vehicle, remove the four T27 TORX screws with flat washers to free the primary chain inspection cover from the primary chaincase cover. Discard inspection cover gasket.

3. Check the primary chain tension. Push on the upper strand to verify that it has free up and down movement midway between the engine compensating sprocket (front) and the clutch sprocket (rear).

4. Refer to Primary Chain Adjustment Table: Softail Models. Measure the free play to be sure that it falls within the ranges specified for a hot or cold engine.

CAUTION

Do not adjust the primary chain tighter than specified. Running chain too tight will result in excessive wear. (00202a)

5. If the chain is too tight or too loose, then adjustment is necessary. Proceed as follows:

   a. See Chain Tensioner Assembly. Locate the chain tensioner assembly and loosen the top center nut a maximum of two turns.

   b. Refer to Primary Chain Adjustment Table: Softail Models. Raise or lower the chain tensioner assembly as necessary to obtain the specified free play.

   c. Tighten the top center nut of the chain tensioner assembly to 21-29 ft-lbs (28.5-39.3 Nm).

NOTES:

- *As chains stretch and wear, they run tighter at one spot than another. Always adjust the free play at the tightest spot in the chain.*
- *Replace the primary chain if it is worn to the point where it cannot be properly adjusted.*
- *Allowing the chain to run loose will cause the motorcycle to jerk when running at low speed resulting in excessive chain and sprocket wear.*

6. See Primary Chaincase Cover. Using a new gasket, position the primary chain inspection cover in the primary chaincase cover. Install four screws (with flat washers). Tighten the screws to 84-108 in-lbs (9.5-12.2 Nm).

Primary Chain Adjustment Table: Softail Models

FREE PLAY	IN.	MM
COLD engine	5/8-7/8	15.9-22.2
HOT engine	3/8-5/8	9.5-15.9

om00115

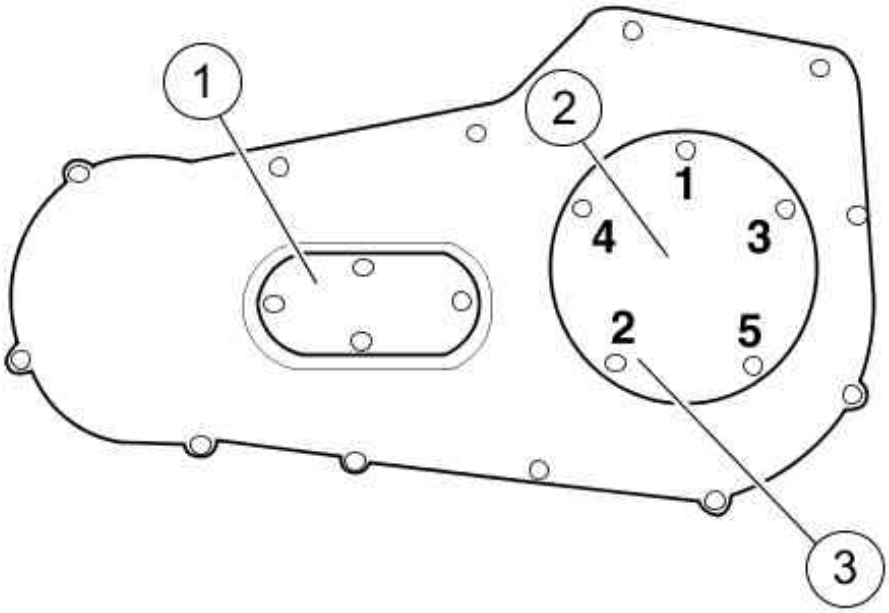

1. Primary chain inspection cover
2. Clutch inspection cover
3. Screw tightening sequence

Primary Chaincase Cover

om00116

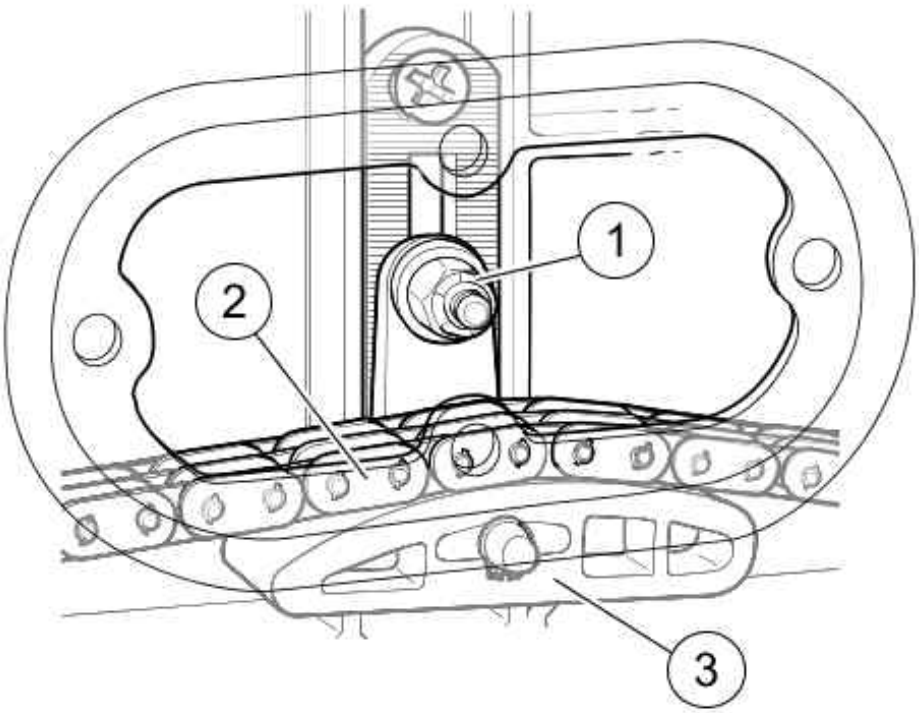

1. Center bolt nut
2. Primary chain
3. Shoe assembly

Chain Tensioner Assembly

Chaincase Lubricant

The chaincase lubricant level should be checked monthly.

Refer to Regular Service Intervals: 2005 Softail Models. The chaincase lubricant should be drained and refilled with fresh lubricant at proper intervals.

NOTE:

When checking the chaincase lubricant level, motorcycle should be standing STRAIGHT UP, not leaning on the jiffy stand. Keep motorcycle upright for a short period of time to equalize lubricant level in the chaincase compartments.

Check Lubricant Level

1. Ride motorcycle until engine is warmed up to normal operating temperature.
2. When motorcycle reaches normal operating temperature, turn engine off and position motorcycle STRAIGHT UP and LEVEL.
3. See Clutch Cover. Using a T27 TORX drive head, remove five screws (3) (with captive washers) to free clutch inspection cover (2) from primary chaincase cover.

CAUTION

Do not overfill the primary chaincase with lubricant. Overfilling can cause rough clutch engagement, incomplete disengagement, clutch drag and/or difficulty in finding neutral at engine idle. (00199b)

4. See Lubricant Level with Motorcycle Upright. With vehicle standing upright, not leaning on the jiffy stand, the lubricant level must be visible in the bottom of the chaincase and must not be any higher than the bottom of the diaphragm spring.

   NOTE:

   Use only Harley-Davidson PRIMARY CHAINCASE LUBRICANT (Part No. 99887-84 quart or 99886-84 gallon).

5. Refer to procedure in Changing Chaincase Lubricant to install gasket and clutch inspection cover.

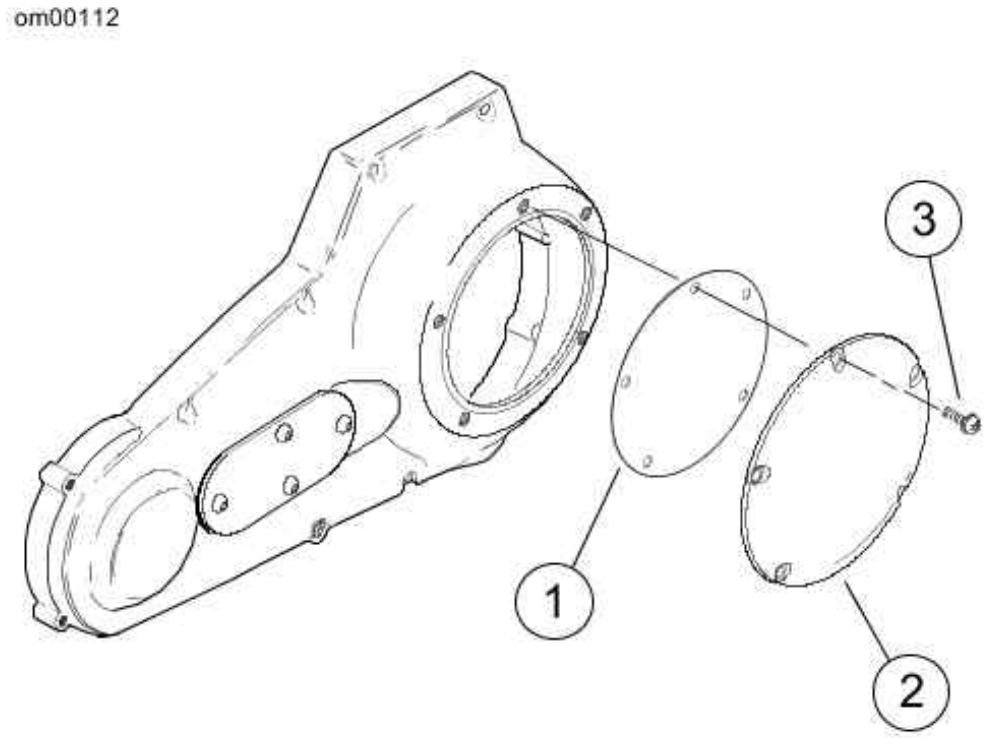

1. Gasket
2. Clutch inspection cover
3. Screws with captive washer

Clutch Cover

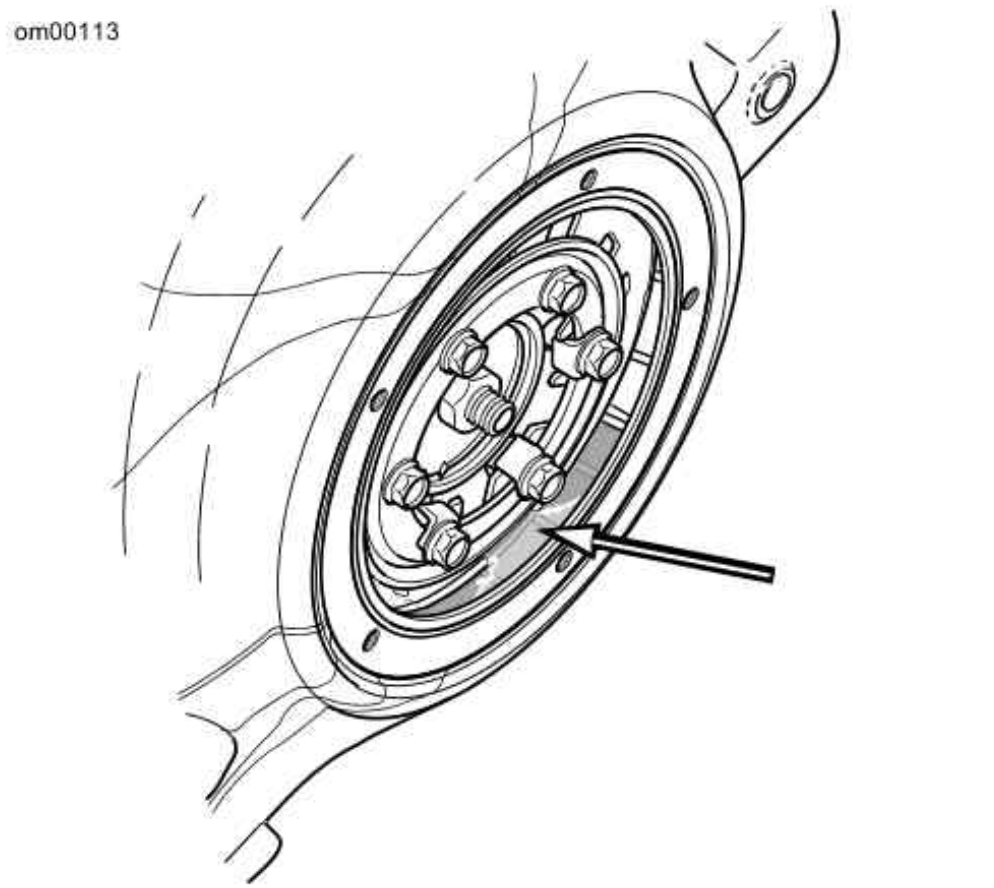

Lubricant Level with Motorcycle Upright

Changing Chaincase Lubricant

1. Ride motorcycle until engine is warmed up to normal operating temperature.

CAUTION

When draining or adding lubricant, do not allow dirt, debris or other contaminants to enter the engine. (00198a)

2. See Clutch Cover. Using a T27 TORX drive head, remove five screws (3) (with captive washers) to free clutch inspection cover (2) from primary chaincase cover.
3. See Removal/Installation of Chaincase Drain Plug. Remove magnetic drain plug at bottom of primary chaincase cover. Drain lubricant into suitable container.

   NOTE:

   Dispose of chaincase lubricant in accordance with local regulations.

4. Clean drain plug. If plug has accumulated a lot of debris, inspect the condition of the chaincase components.
5. Inspect drain plug o-ring for cuts, tears or signs of deterioration. Replace as necessary.
6. Install drain plug back into primary chaincase cover. Tighten plug to 36-60 in-lbs (4.1-6.8 Nm).

CAUTION

Do not overfill the primary chaincase with lubricant. Overfilling can cause rough clutch engagement, incomplete disengagement, clutch drag and/or difficulty in finding neutral at engine idle. (00199b)

7. Pour 26 ounces (0.77 liter) of Harley-Davidson PRIMARY CHAINCASE LUBRICANT (Part No. 99887-84 quart or 99886-84 gallon) through the clutch inspection cover opening.

⚠WARNING

Be sure that no lubricant gets on tires, wheels or brakes when changing fluid. Traction can be adversely affected, which could result in loss of control of the motorcycle and death or serious injury. (00047c)

CAUTION

When draining or adding lubricant, do not allow dirt, debris or other contaminants to enter the engine. (00198a)

NOTE:

Use only Harley-Davidson PRIMARY CHAINCASE LUBRICANT (Part No. 99887-84 quart or 99886-84 gallon).

8. To avoid punching holes in the clutch inspection cover gasket or enlarging existing holes, install clutch inspection cover and new gasket as follows:

    a. Align the triangular shaped hole in the gasket with the top hole in the clutch inspection cover. Be sure the rubber molding and the words "towards clutch" face the motorcycle.

    b. Insert screw (with captive washer) through clutch inspection cover and carefully thread it all the way through triangular shaped hole in gasket. Do not push screw through hole.

    c. Hang the clutch inspection cover on the primary chaincase cover flange by starting the top cover screw.

    d. Start the remaining four screws (with captive washers).

    e. Using a T27 TORX drive head, alternately tighten screws to 84-108 in-lbs (9.5-12.2 Nm) in the pattern shown in Primary Chaincase Cover.

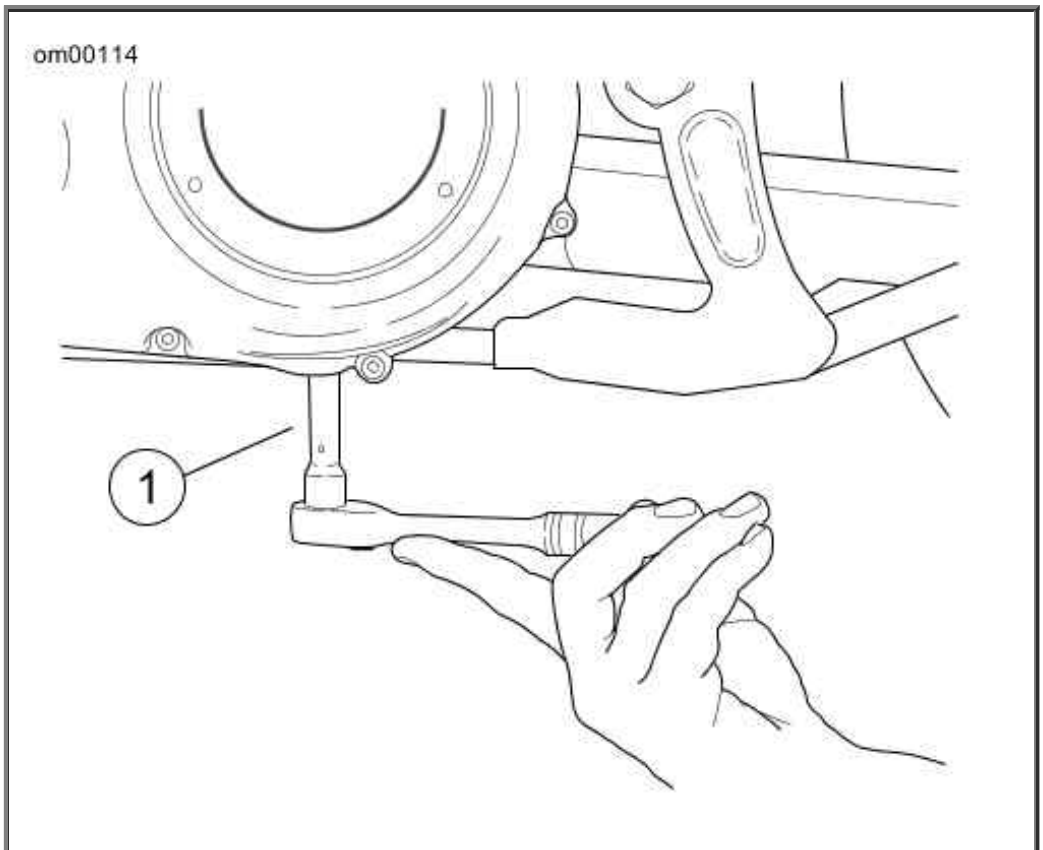

1. 36-60 in-lbs (4.1-6.8 Nm)

Removal/Installation of Chaincase Drain Plug

Rear Drive Belt: Softail Models

General

The inner tooth surface of the secondary belt has a thin coating of polyethylene lubricant. During initial operation, this coating will wear off as it is burnished into the belt fabric. This is a normal

condition and not an indication of belt wear.

Refer to Regular Service Intervals: 2005 Softail Models. Belt tension is set at the factory and should be checked after the first 1000 miles (1600 kilometers) and at proper intervals thereafter.

Checking Deflection

See Check Belt Deflection: Softail Models. With the rear wheel on the ground and one rider sitting on the motorcycle, use the BELT TENSION GAUGE HD-35381 to apply 10 lbs. (4.5 kg) of force at the midpoint of the top belt strand. Belt deflection should be 5/16-3/8 in. (7.9-9.5 mm). If belt tension adjustment is necessary, see a Harley-Davidson dealer or follow the instructions given in the applicable Service Manual.

⚠WARNING

Be sure wheel and brake caliper are aligned. Riding with a misaligned wheel or brake caliper can cause the brake disc to bind and lead to loss of control, which could result in death or serious injury. (00050a)

Check rear brake caliper position on rear brake disc. Disc should run true within brake caliper.

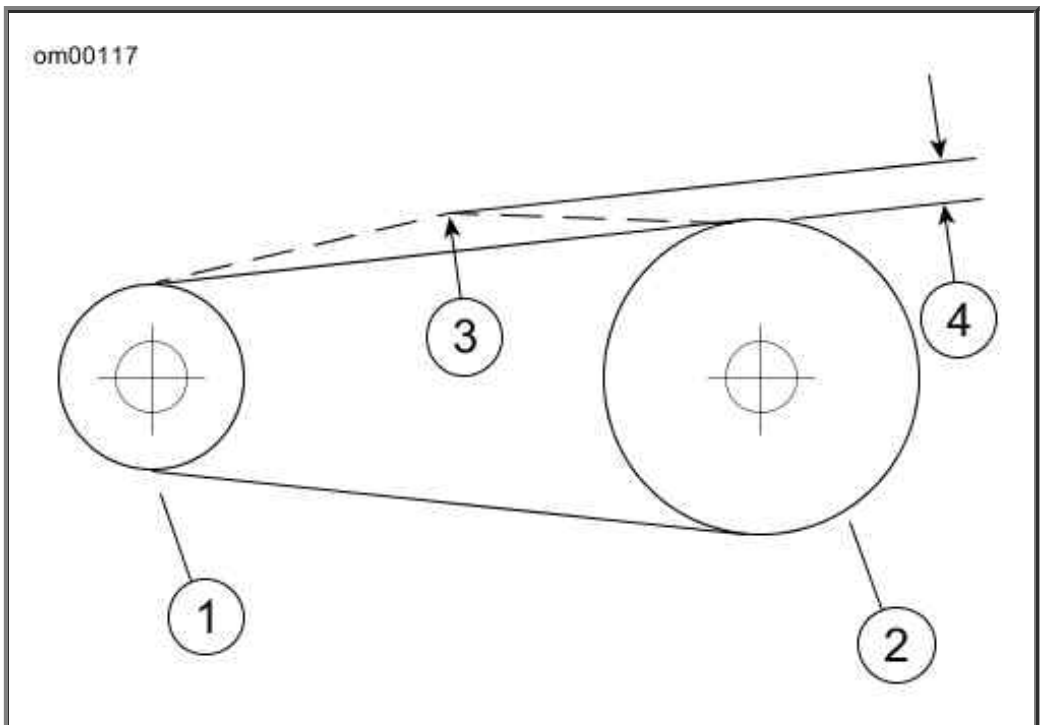

1. Transmission sprocket
2. Rear wheel sprocket
3. Force of 10 lbs (4.5 kg)
4. Deflection of 5/16-3/8 in. (7.9-9.5 mm)

Check Belt Deflection: Softail Models

Chassis Lubrication

Refer to Regular Service Intervals: 2005 Softail Models for all maintenance schedules.

CAUTION

Do not switch lubricant brands indiscriminately because some lubricants interact chemically when mixed. Use of inferior lubricants can damage the engine. (00184a)

1. Use recommended special purpose grease for steering head bearings. Use a multipurpose chassis grease for other applications.
2. Remove and lubricate handlebar throttle control grip sleeve with fresh graphite at proper intervals.
3. Lubricate throttle control cables and clutch control cable at proper intervals.
4. Lubricate front brake hand lever and clutch control hand lever only if necessary.
5. Inspect rear fork pivot shaft bearings.
6. Pack the steering head bearings with fresh grease at proper intervals.
7. Lubricate the jiffy stand mechanism with LOCTITE AEROSOL ANTI-SEIZE at proper intervals.

NOTE:

For model specific information regarding the chassis lubrication, refer to the appropriate Service Manual or see a Harley-Davidson dealer.

Oil Applications

Refer to Regular Service Intervals: 2005 Softail Models for all control connections and parts. Vehicle should be oiled at regular intervals, particularly after washing motorcycle or driving in wet weather.

Front Fork Oil

Refer to Regular Service Intervals: 2005 Softail Models. Drain front fork oil and refill at proper intervals. If fork does not appear to be working properly or an appreciable amount of oil leakage should develop, see a Harley-Davidson dealer. If there is insufficient oil in either side of fork, the rebound action will be incorrect.

Fuel Strainer

Carbureted Models Only

See Fuel Supply Valve. A screen type fuel strainer is located on top of the supply valve inside the fuel tank. Screen should be inspected/cleaned at proper intervals. Check the fuel valve, lines and fittings for leakage as part of the preride inspection. Refer to Regular Service Intervals: 2005 Softail Models.

Fuel Filter

EFI Models Only

Fuel injected motorcycles have a fuel filter attached to the fuel pump.

NOTE:

For model specific information regarding fuel filter maintenance, refer to the appropriate Service Manual or see a Harley-Davidson dealer.

Clutch

CAUTION

The clutch control cable must be oiled and adjusted periodically to compensate for lining wear. See Service Interval Table. Failure to oil and adjust the clutch control cable can result in equipment damage. (00203a)

The need for attention to clutch and controls will be indicated by the clutch slipping under load or dragging when released. In this situation, check the control cable adjustment first. See a Harley-Davidson dealer for proper service.

Hydraulic Lifters

The hydraulic lifters are self-adjusting. They automatically adjust length to compensate for engine expansion and valve mechanism wear. This keeps the valve mechanism free of lash when the engine is running.

When starting an engine which has been turned off even for a few minutes, the valve mechanism may be slightly noisy until the hydraulic units completely refill with oil. If at any time the valve mechanism becomes abnormally noisy, other than for a short period immediately after engine is started, it is an indication that one or more of the hydraulic units may not be functioning properly.

Always check the oil supply in the oil tank first since normal circulation of oil through the engine is necessary for proper operation of the hydraulic units.

If there is oil in the tank, the units may not be functioning properly because of dirt in the oil supply passages leading to the lifter units. See a Harley-Davidson dealer for service.

Front Fork Bearings

⚠WARNING

Adjustments to front fork bearings should be performed by a Harley-Davidson dealer. Improperly adjusted bearings can adversely affect handling and stability, which could result in death or serious injury. (00051a)

Refer to Regular Service Intervals: 2005 Softail Models. Check front fork for proper bearing adjustment and lubricate bearings at proper intervals.

With motorcycle front end raised off the floor, be sure front fork turns freely without any binding or interference and that there is no appreciable front to rear fork shake indicating excessive bearing looseness. Steering head bearings should be adjusted according to Service Manual procedure, if necessary.

Rear Fork Pivot Shaft

Refer to Regular Service Intervals: 2005 Softail Models. Check the tightness of the rear fork pivot shaft fastener at proper intervals.

NOTE:

For model specific information regarding the rear fork pivot shaft, refer to the appropriate Service Manual or see a Harley-Davidson dealer.

Brakes

⚠WARNING

Inspect brake pads for wear at service maintenance intervals. If you ride under adverse conditions (steep hills, heavy traffic, etc.), inspect more frequently. Excessively worn brake pads can lead to brake failure, which could result in death or serious injury. (00052a)

1. Refer to Regular Service Intervals: 2005 Softail Models. Check brake pads and brake discs for wear at proper intervals.
2. Check the fluid level in the master cylinder reservoirs at proper intervals.
3. If level is low, clean dirt and debris from reservoir cover before removing.

⚠CAUTION

Direct contact of D.O.T. 5 brake fluid with eyes can cause eye irritation, swelling, and redness. Avoid eye contact. In case of eye contact flush with large amounts of water and get medical attention. Swallowing large amounts of D.O.T. 5 brake fluid can cause digestive discomfort. If swallowed, obtain medical attention. Use in well ventilated area. KEEP OUT OF REACH OF CHILDREN. (00144a)

4. Add D.O.T. 5 SILICONE HYDRAULIC BRAKE FLUID (Part No. 99902-77) if necessary.

NOTE:

Use only D.O.T. 5 SILICONE HYDRAULIC BRAKE FLUID (Part No. 99902-77) approved for brake system use and available from your Harley-Davidson dealer.

Harley-Davidson has provided your new motorcycle with the optimum brake pad friction material available. It is selected to give the best performance possible under dry, wet and high operating temperature conditions. It exceeds all regulatory requirements currently in effect. However, during some braking conditions you may experience noise. This is normal for this friction material.

⚠WARNING

Brakes are a critical safety component. Contact a Harley-Davidson dealer for brake repair or replacement. Improperly serviced brakes can adversely affect brake performance, which could result in death or serious injury. (00054a)

See Measuring Brake Outer Pads. Visual inspection of brake pads can be made without removing the caliper. View the lower area of each caliper with a flashlight.

⚠WARNING

Perform routine scheduled brake maintenance. Lack of maintenance at recommended intervals can adversely affect brake performance, which could result in death or serious injury. (00055a)

⚠WARNING

Always replace brake pads in complete sets for correct and safe brake operation. Improper brake operation could result in death or serious injury. (00111a)

NOTES:

- *If the brake pad friction material is 0.04 in. (1.02 mm) thick or less, the pads must be replaced immediately.*
- *Always replace brake pads in pairs.*

The rear brake outer pad on all models can be measured from the caliper bracket side using a thin plastic 6.0 in. (152.4 mm) rule. Place the rule against the brake disc through the space alongside the caliper.

The outer surface of the brake pad backing plate should measure 0.04 in. (1.02 mm) or more away from the brake disc.

NOTE:

Replace pads if brake friction material is 0.04 in. (1.02 mm) or less above the backing plate.

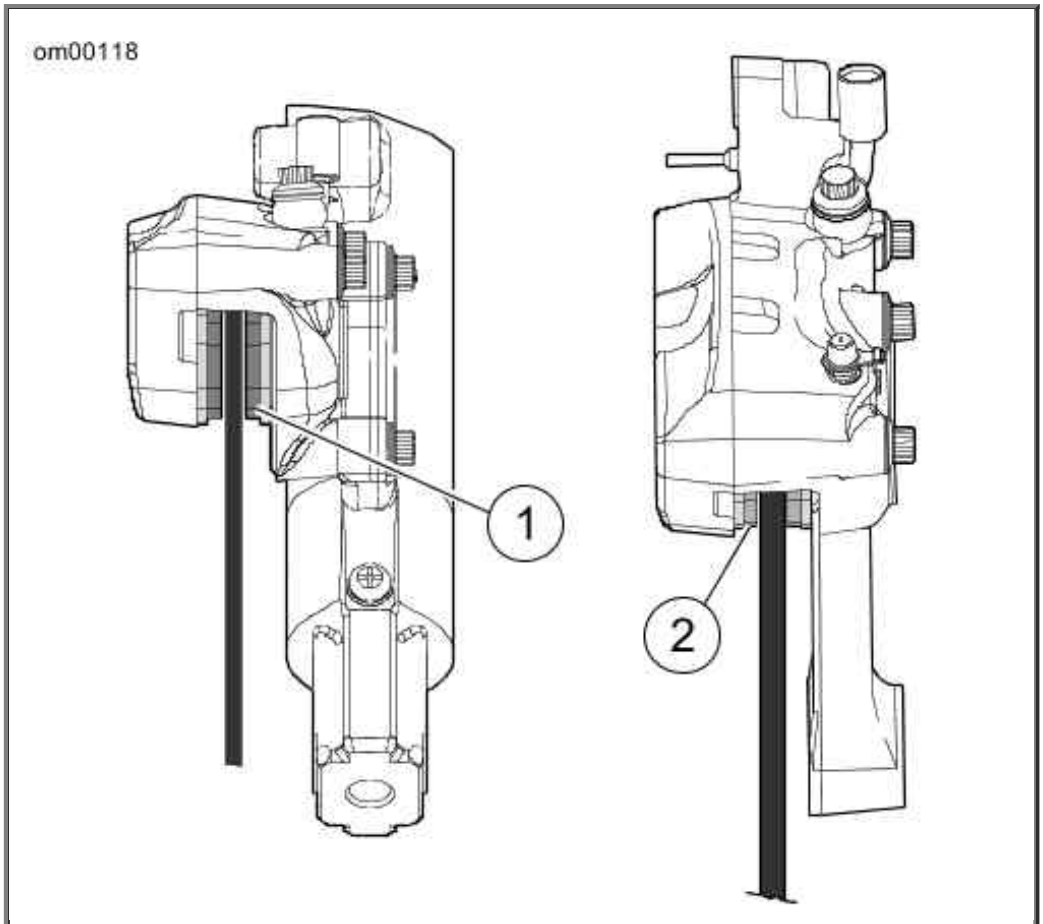

1. Front brake bottom view
2. Rear brake top view

Measuring Brake Outer Pads

Brakes: Springer Models

Springer models have a single piston front brake. If the brake pad friction material is 0.06 in. (1.59 mm) thick or less (the thickness of a nickel), the pads must be replaced IMMEDIATELY.

Tires

See Specifications: 2005 Softail Models for tire pressures and sizes.

- Be sure to keep tires properly inflated.
- Follow tire data for correct cold tire inflation pressures.
- Check before riding when tires are cold.
- Do not over-inflate tires.

⚠WARNING

Do not inflate tire beyond maximum pressure as specified on sidewall. Over inflated tires can blow out, which could result in death or serious injury. (00027a)

⚠WARNING

Match tires, tubes, air valves and caps to the correct wheel

rim. Contact a Harley-Davidson dealer. Mismatching can result in damage to the tire bead, allow tire slippage on the rim or cause tire failure, which could result in death or serious injury. (00023a)

Check inflation pressure and inspect tread for punctures, cuts, breaks, etc., at least weekly if in daily use. Check before each trip if used occasionally.

⚠WARNING

Be sure tires are properly inflated, balanced and have adequate tread. Inspect your tires regularly and see a Harley-Davidson dealer for replacements. Riding with excessively worn, unbalanced or under-inflated tires can adversely affect stability and handling, which could result in death or serious injury. (00014a)

Same as original equipment tires should be used. Other tires may not fit correctly, could adversely affect handling, and may be hazardous to use.

⚠WARNING

Tires are a critical safety component. Contact a Harley-Davidson dealer for tire repair or replacement. Improper tire service can adversely affect stability and handling, which could result in death or serious injury. (00057a)

⚠WARNING

Replace punctured or damaged tires. In some cases, small punctures in the tread area may be repaired from within the demounted tire by a Harley-Davidson dealer. Speed should NOT exceed 50 mph (80 km/h) for the first 24 hours after repair, and the repaired tire should NEVER be used over 80 mph (130 km/h). Failure to follow this warning could result in death or serious injury. (00015a)

⚠WARNING

Striking an object, such as a curb, can cause internal tire damage. If an object is struck, remove and inspect both the inside and outside of the tire. A damaged tire can adversely affect stability and handling, which could result in death or serious injury. (00058a)

Tire Replacement

Inspection

⚠WARNING

Harley-Davidson tires are equipped with wear bars that run horizontally across the tread. When wear bars become visible and only 1/32 in. (0.8 mm) tread depth remains, replace tire immediately. Using a worn tire can adversely affect stability and handling, which could result in death or serious injury. Use only Dunlop Harley-Davidson replacement tires. (00090a)

See Tire Sidewall. Arrows on tire sidewalls pinpoint location of wear bar indicators.

Tread wear indicator bars will appear on tire tread surfaces when 1/32 in. (0.8 mm) or less of tire tread remains. See Tread Surface. Always replace tires before the tread wear indicator bars appear.

When To Replace Tires

New tires are needed if any of the following conditions exist:

1. Tread wear indicator bars become visible on the tread surfaces.
2. Tire cords or fabric become visible through cracked sidewalls, snags or deep cuts.
3. A bump, bulge or split in the tire.
4. Puncture, cut or other damage to the tire that cannot be repaired.

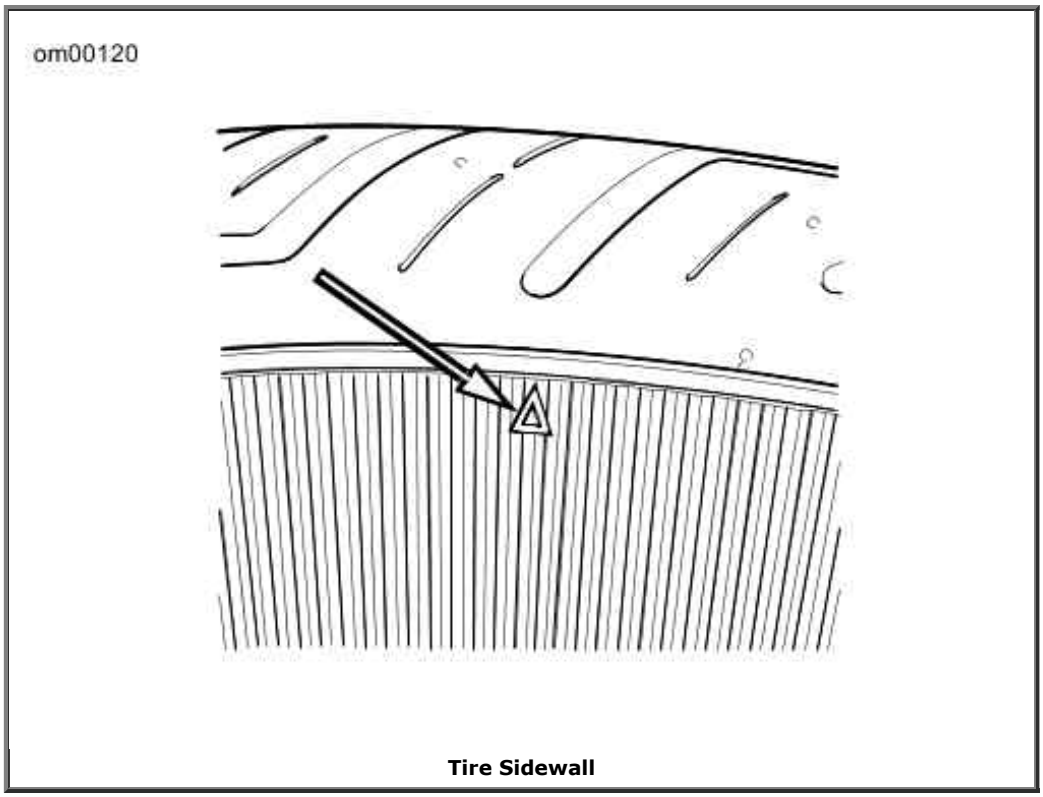

Tire Sidewall

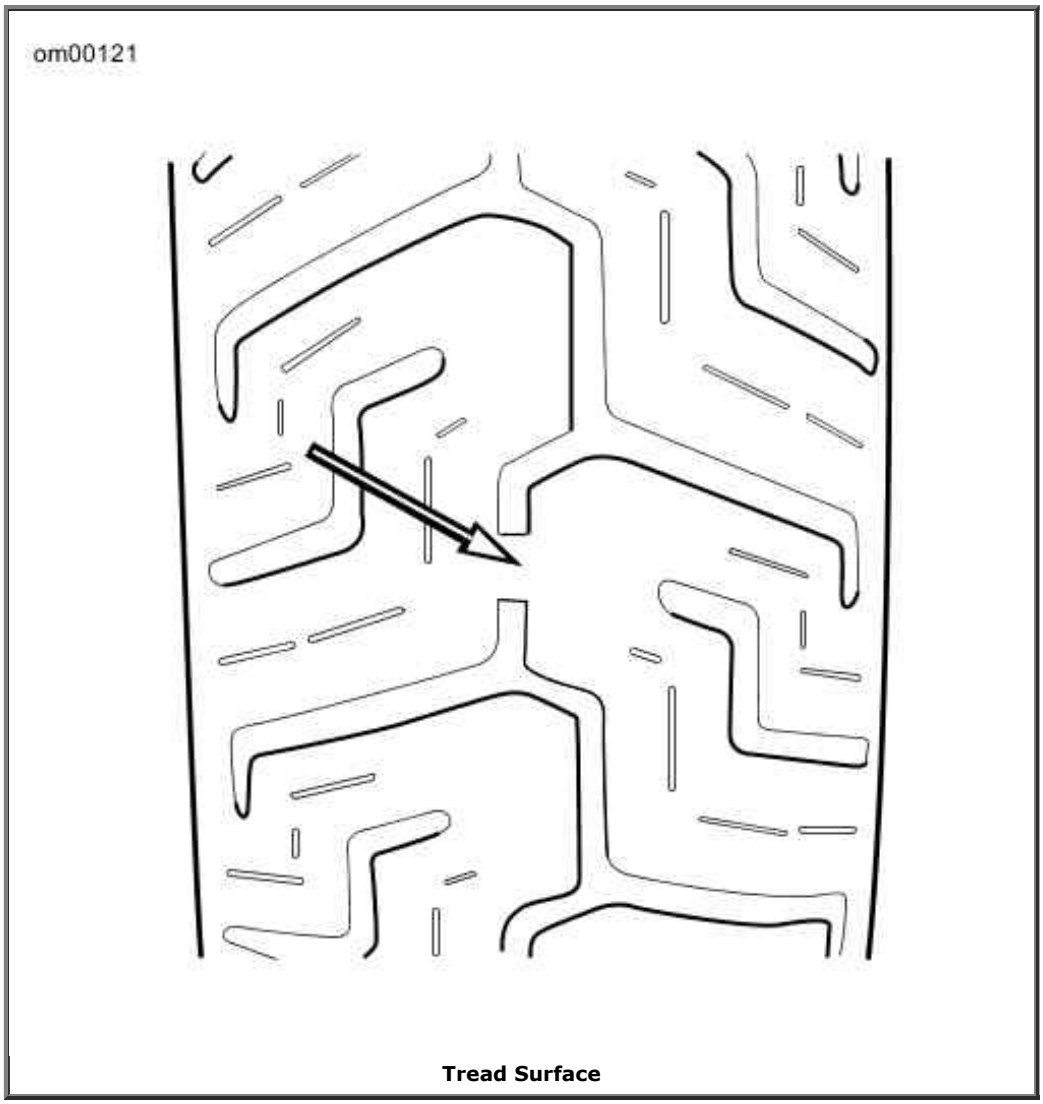

Tread Surface

Shock Absorbers

Refer to Regular Service Intervals: 2005 Softail Models. Inspect shock absorbers and rubber bushings for leaks and bushing deterioration at proper intervals.

Spark Plugs

Refer to Regular Service Intervals: 2005 Softail Models. Check the spark plugs at proper intervals.

⚠CAUTION

Do NOT pull on any electrical wires. Pulling on electrical wires may damage the internal conductor causing high resistance, which may result in minor or moderate injury. (00168a)

Disconnect spark plug cables from plugs by pulling on the molded connector caps. To reconnect, simply snap-on spark plug cables to tops of spark plugs.

Refer to Ignition System: 2005 Twin Cam Models before servicing spark plugs.

1. Check spark plug type. Only use those spark plugs specified for your model motorcycle.

2. Check spark plug gap against table specifications.
3. Always tighten to the proper torque. Spark plugs must be tightened to the torque specified for proper heat transfer.

NOTE:

If a torque wrench is not available, tighten plugs finger tight and then tighten an additional one quarter turn with a spark plug wrench.

Ignition

The engine in your motorcycle has been designed specifically to achieve optimum fuel economy within exhaust emission controls. Factory programmed ignition characteristics provide maximum engine performance and driveability.

NOTE:

The ignition control unit monitors engine load. In certain transient load conditions (as the throttle is opened), the timing changes from normal to fully advanced. At this point, the operator can sometimes hear a noise that is similar to pre-ignition detonation.

This noise should not be confused with detonation which can be stopped by the use of a higher grade fuel. It is caused by the instant pressure rise in the combustion chambers as the spark advances rapidly. This noise doesn't affect engine performance.

Carburetor

The carburetor has been specifically designed for emissions control operation. All jets are fixed at the factory.

Carburetor controls include throttle, enrichener and idle speed adjusting screw. Operation should be checked and adjusted at proper intervals. Refer to Regular Service Intervals: 2005 Softail Models.

CAUTION

Operation at higher altitudes (approximately 4000 ft. (1200 meters) elevation) can require carburetor modifications for best engine performance. See a Harley-Davidson dealer for these adjustments. Failure to do so could result in equipment damage. (00206a)

We recommend that any carburetor service be performed by a Harley-Davidson dealer.

Air Cleaner

See Air Cleaner: Twin Cam Models. The engine air cleaner is a paper/wire mesh air filter element.

Refer to Regular Service Intervals: 2005 Softail Models. Remove air cleaner cover and inspect filter element at proper intervals. Under dusty conditions, inspect more often.

The paper/wire mesh air filter element should be washed in luke warm water with a mild detergent.

⚠WARNING

Compressed air can pierce the skin and flying debris from compressed air could cause serious eye injury. Wear safety glasses when working with compressed air. Never use your hand to check for air leaks or to determine air flow rates. (00061a)

- Allow filter to either air dry or blow it dry, from the inside, with low pressure air.
- Do not use an air cleaner filter oil on the Harley-Davidson paper/wire mesh air filter element.

CAUTION

Install air filter before running engine. Failure to do so can draw debris into the engine and could result in engine damage. (00207a)

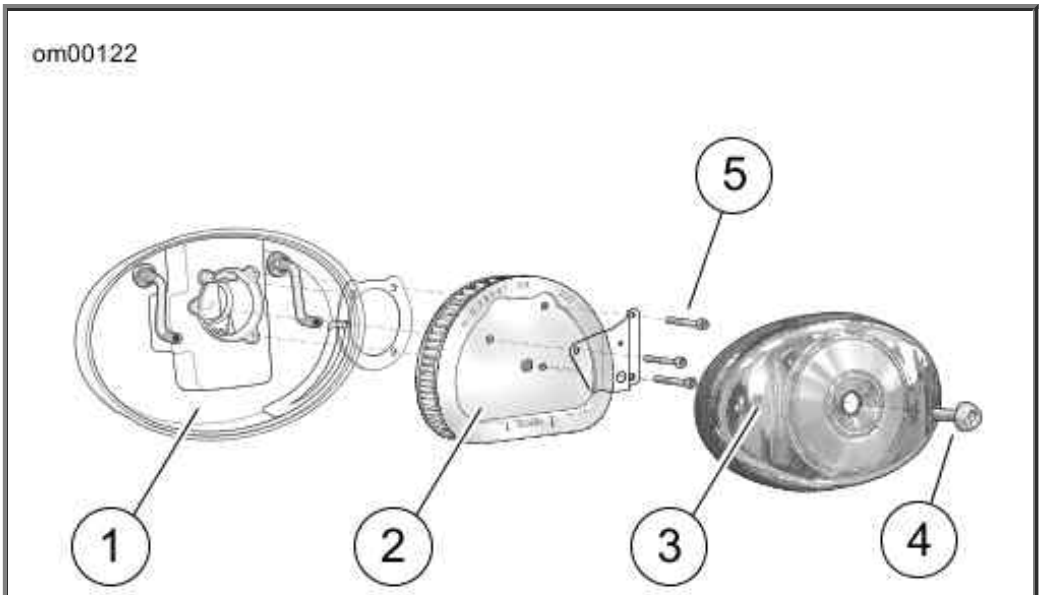

1. Backplate
2. Filter element
3. Cover
4. Cover screw
5. Screws

Air Cleaner: Twin Cam Models

Headlamp

See Headlamp Bulbs: Softail Models. The headlamp assembly uses a replaceable quartz halogen bulb.

NOTE:

Refer to Bulb Chart: 2005 Softail Models and see a service manual for more details.

CAUTION

When replacement is required, use only the specified sealed beam unit or bulb, available from a Harley-Davidson dealer. An improper wattage sealed beam or bulb, can cause charging system problems. (00209a)

CAUTION

Never touch the quartz bulb. Fingerprints will etch the glass and decrease bulb life. Grab the bulb with paper or a clean, dry cloth. Failure to do so could result in bulb damage. (00210a)

⚠WARNING

Handle bulb carefully and wear eye protection. Bulb contains Halogen gas under pressure, which, if not handled carefully, could cause serious eye injury. (00062a)

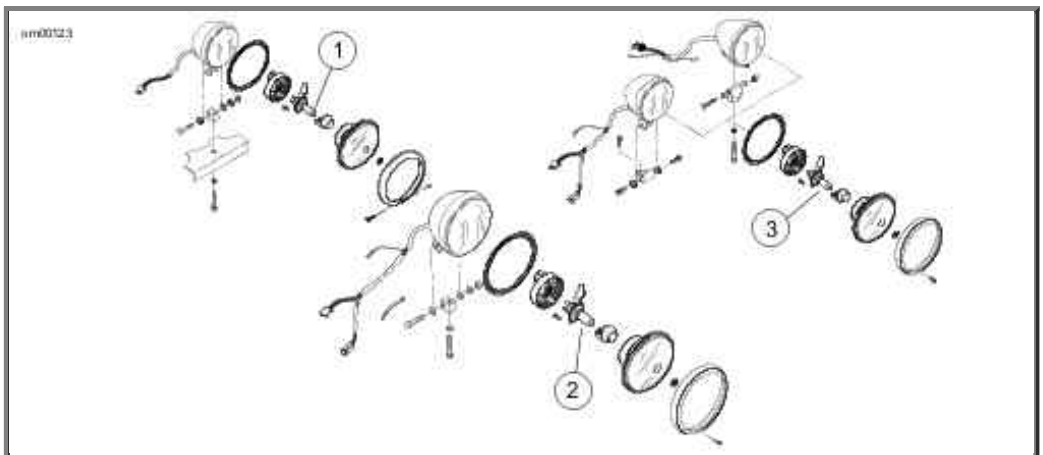

1. Bulb for FXST or FXSTB
2. Lamp for FLST, FLSTF, FLSTN
3. Bulb for FXSTS, FXSTD, FLSTS

Headlamp Bulbs: Softail Models

Headlamp Alignment: Softail Models

General

⚠WARNING

The automatic-on headlamp feature provides increased visibility of the rider to other motorists. Be sure headlamp is on at all times. Poor visibility of rider to other motorists can result in death or serious injury. (00030b)

Check headlamp for proper height and lateral alignment:

- When the new owner takes delivery of the motorcycle.
- When there is a change in load such as additional luggage, etc.

1. Refer to Tire Pressures: 2005 Softail Models. Verify correct front and rear tire pressure.

2. Place motorcycle on level floor (or pavement) in an area with minimum light.

3. Position motorcycle 25 ft. (7.6 m) away from a screen or wall. Measure the distance from directly below the front axle to the base of the screen/wall.

4. Set mark for alignment purposes.

    a. See Headlamp Alignment: FX Softails and FLSTC/FLSTF International Models. For FXSTD, FXST, FXSTB, FXSTS (and International FLSTC/FLSTF) vehicles, draw a horizontal line 35 in. (0.9 m) above floor on screen/wall.

    b. See Headlamp Alignment: FLSTC/FLSTF Domestic Models. For FLSTC and FLSTF vehicles, draw a horizontal line level with the center of the headlamp.

5. Load vehicle with rider, passenger (if normally present) and any cargo. Weight will compress vehicle suspension slightly.

6. Stand motorcycle upright with both tires resting on floor and with front wheel held in straight alignment (directly forward).

7. See Headlamp Switch High Beam Setting. Turn ignition switch ON. Set handlebar headlamp switch to HIGH beam position.

8. Check light beam for alignment.

    a. The main beam, which is a broad, flat pattern of light, should be centered equally above and below the horizontal line.

    b. The main beam of light should also be directed straight ahead. Properly adjusted headlamps project an equal area of light to right and left of center.

    c. Adjust headlamp alignment if necessary.

om00124

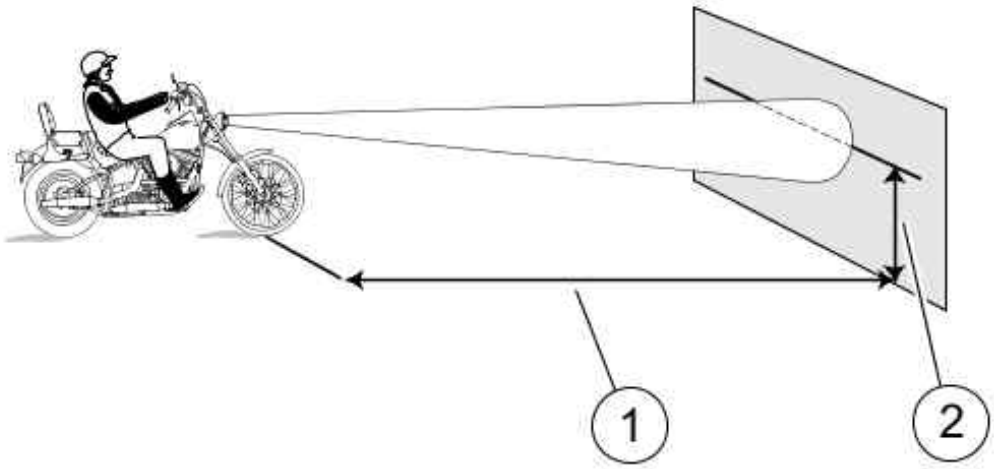

1. 25 feet (7.6 meters)
2. 25 inches (0.9 meters) above floor

Headlamp Alignment: FX Softails and FLSTC/FLSTF International Models

om00125

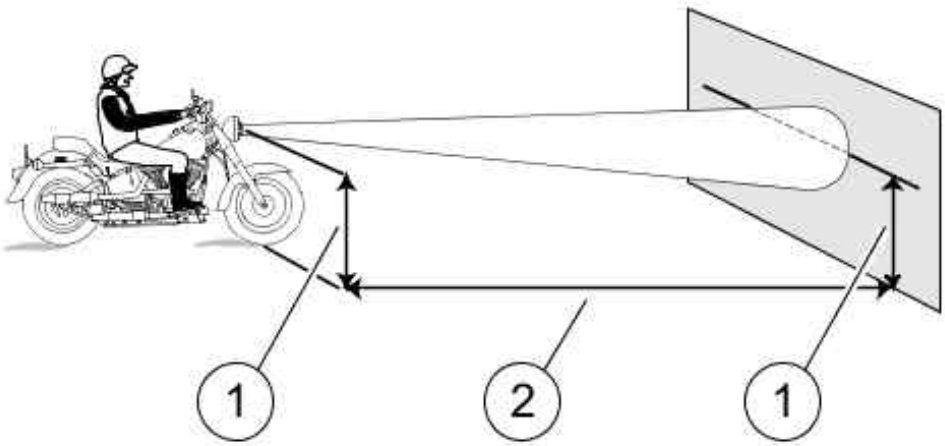

1. Level with center of headlamp
2. 25 feet (7.6 meters)

Headlamp Alignment: FLSTC/FLSTF Domestic Models

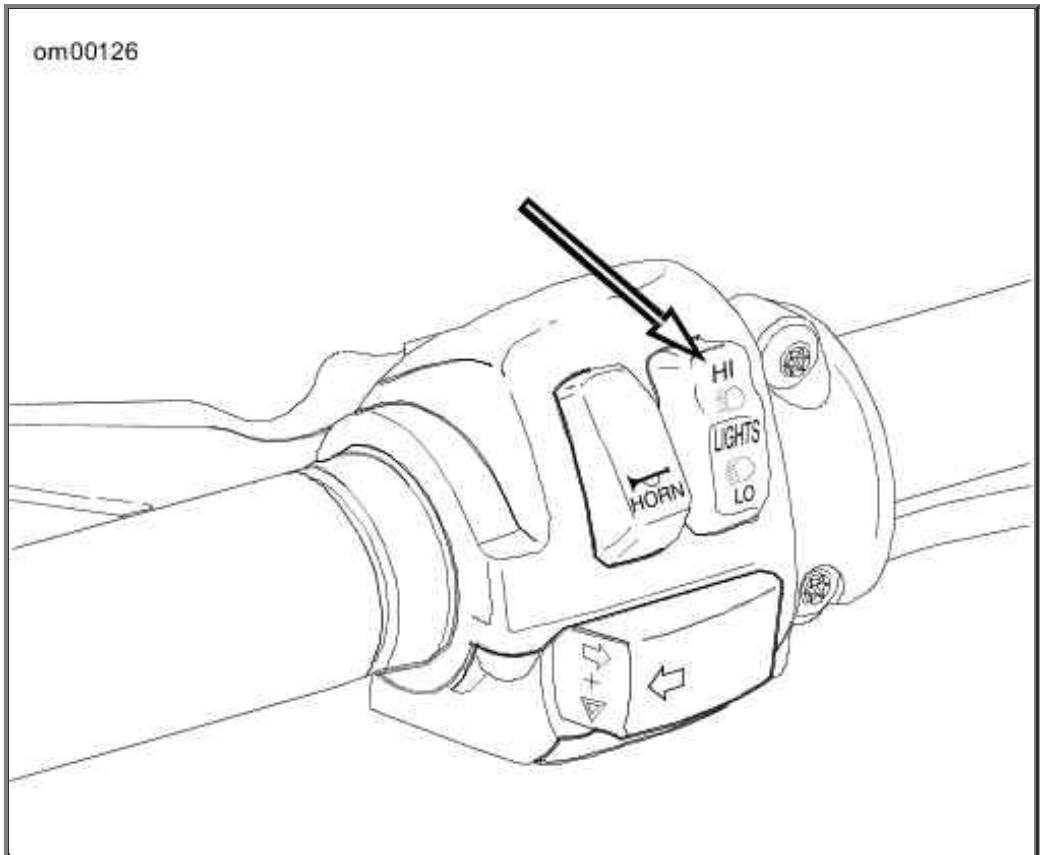

Headlamp Switch High Beam Setting

FXSTS/FLSTSC Models

1. See Headlamp Adjustment: FXSTS. Set vertical adjustment.
   a. Loosen the two vertical adjustment fasteners (1).
   b. Tilt headlamp up or down in relationship to the horizontal line from the headlamp alignment inspection.
   c. Tighten both fasteners to 25-35 ft-lbs (33.9-47.5 Nm).

CAUTION

Position FXSTS headlamp as far forward as the slot will allow. This will prevent the headlamp from contacting the springs which can result in vehicle damage. (00250a)

2. Set horizontal adjustment.
   a. Loosen the horizontal adjustment fastener (2).
   b. Tilt headlamp left or right to direct light beam straight ahead.
   c. Move headlamp adjustment mechanism forward to the end of the bracket slot.
   d. Tighten fastener to 25-35 ft-lbs (33.9-47.5 Nm).

FLSTC/FLSTF/FXSTB/FXST/FLSTN Models

1. See Headlamp Adjustment: FLSTC, FLSTF, FXSTB, FXST. Loosen horizontal adjusting bolt (2) to adjust headlamp beam side to side.
2. Tighten fastener to 30-35 ft-lbs (40.7-47.5 Nm).
3. Loosen vertical adjusting bolt (1) to adjust headlamp up or down.
4. Tighten fastener to 35-45 ft-lbs (47.5-61.0 Nm).

FXSTD Models

1. See Headlamp Adjustment: FXSTD. Loosen horizontal adjusting bolt (2) to adjust headlamp beam side to side.
2. Tighten fastener 25-30 ft-lbs (33.9-40.7 Nm).
3. Loosen vertical adjusting bolt (1) to adjust headlamp up or down.
4. Tighten fastener to 25-30 ft-lbs (33.9-40.7 Nm).

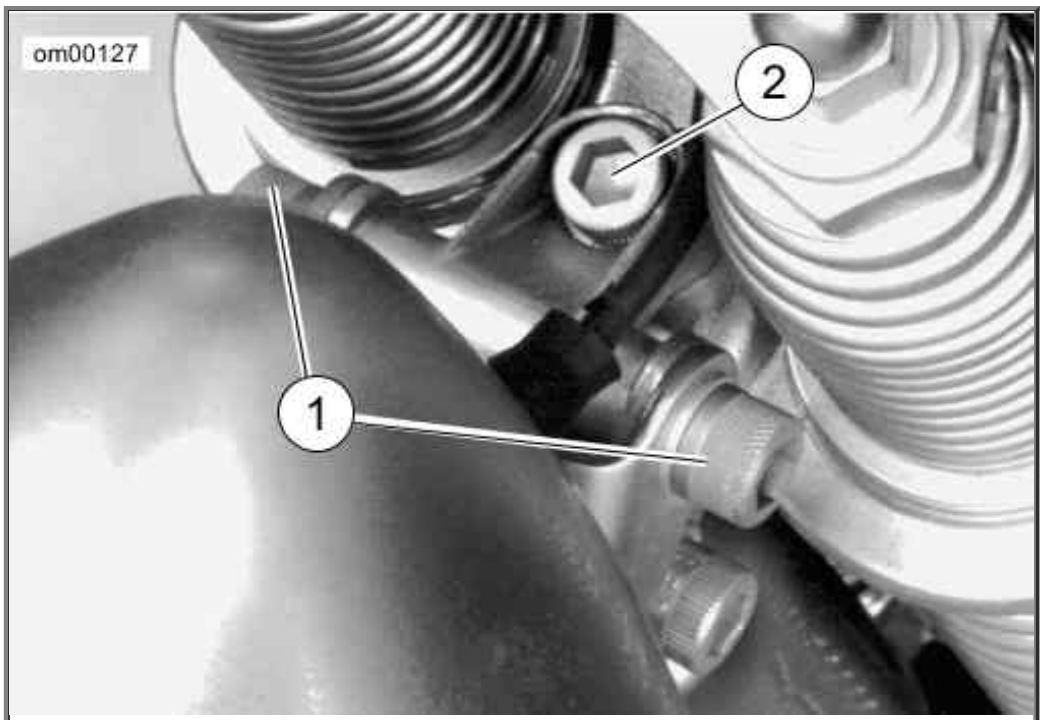

1. Vertical adjusting fastener (2)
2. Horizontal adjusting fastener

Headlamp Adjustment: FXSTS

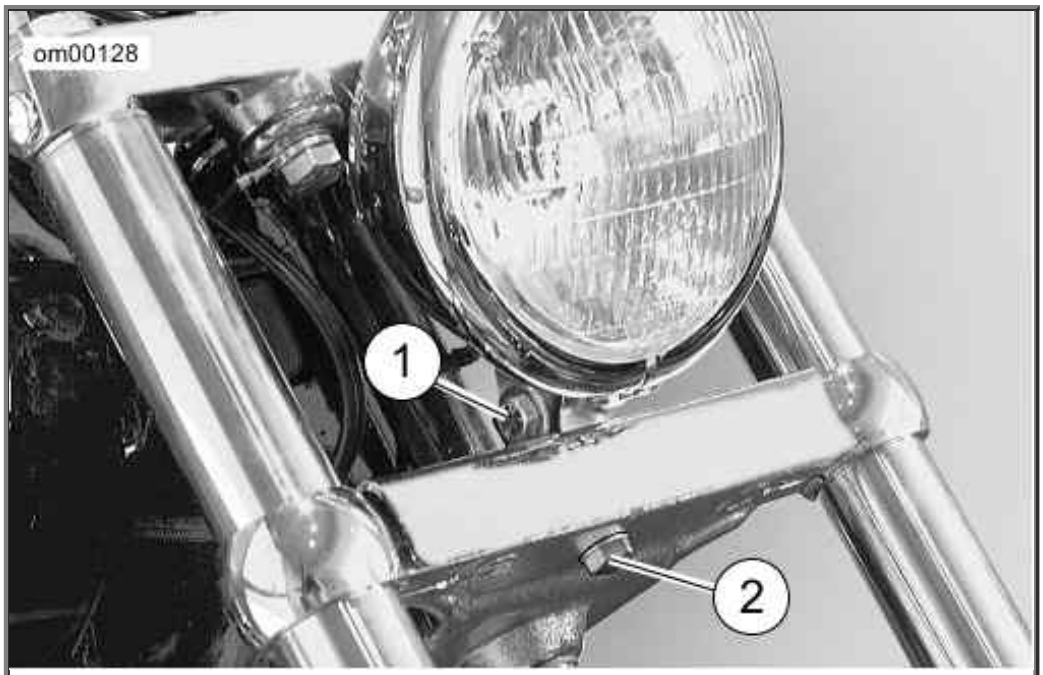

1. Vertical adjusting bolt (2)
2. Horizontal adjusting bolt

Headlamp Adjustment: FLSTC, FLSTF, FXSTB, FXST

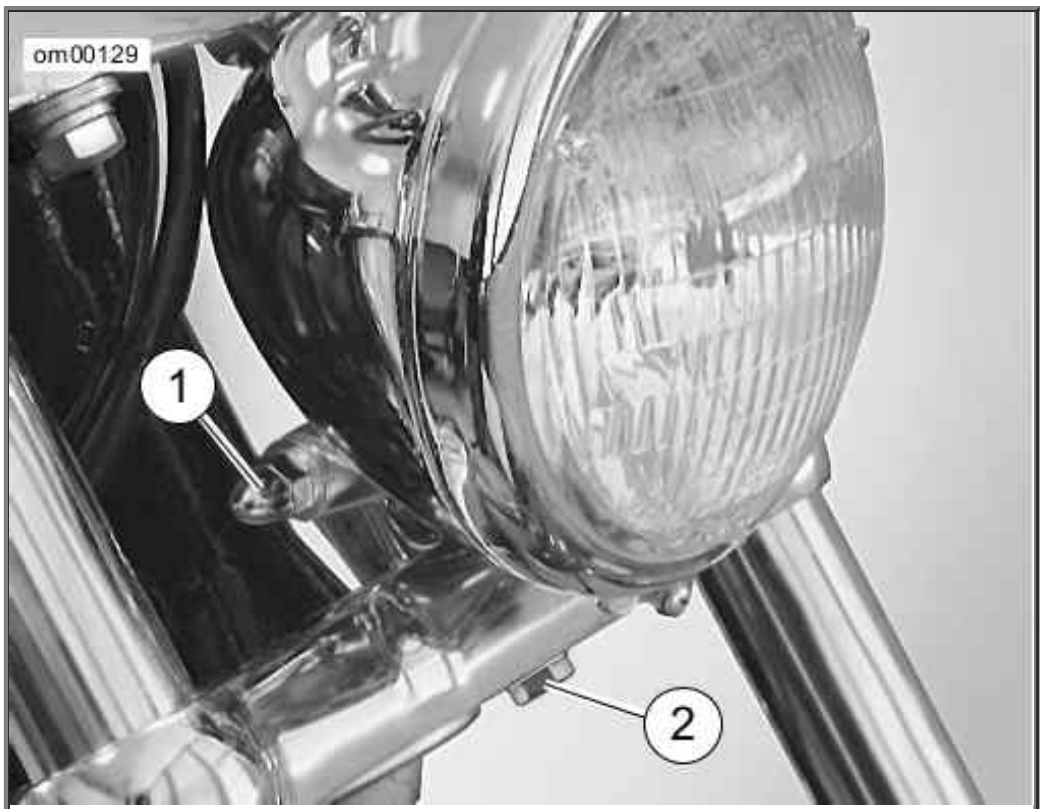

1. Vertical adjusting bolt
2. Horizontal adjusting bolt

Headlamp Adjustment: FXSTD

Turn Signal Bulbs: Bullet Style

Replacement

1. See Lens Cap Notch. To access the front or rear turn signal bulbs for replacement, locate a notch on the turn signal lens cap.
2. Insert a coin in the lens cap notch, and carefully twist until the lens cap pops out of the lamp housing.
3. Push in and twist the lamp bulb counterclockwise and pull lamp bulb out of the socket.
4. Orient index pins on **new** lamp bulb with pin guides inside bulb socket.
5. Push lamp bulb in and turn clockwise to lock in place.
6. Snap lens cap back into the lamp holder.

Alignment

Refer to service manual for alignment procedure.

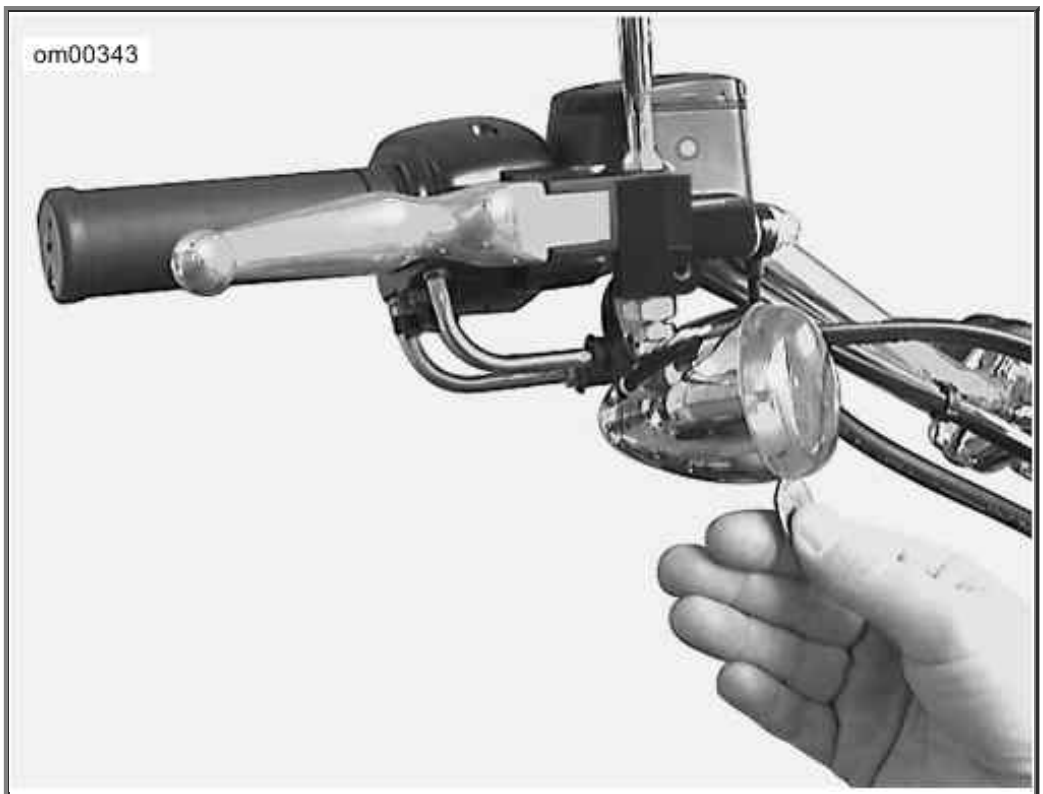

Lens Cap Notch

Turn Signal Bulbs: FLSTC Models

Replacement

1. Loosen two screws on turn signal lens cap to detach lens cap.
2. Push in and twist the lamp bulb counterclockwise and pull lamp bulb out of the socket.
3. Orient index pins on **new** lamp bulb with pin guides inside bulb socket.
4. Push lamp bulb in and turn clockwise to lock in place.

5. Reinstall lens cap.

Tail Lamp: FLSTSC/FLSTN

Bulb Replacement

1. See Tail Lamp Assembly: FLSTSC/FLSTN. Remove the lens.
2. Turn the bulb 1/4 turn while pressing the bulb into the housing.
3. Remove the bulb.
4. Replace the bulb and reinstall the lens.

NOTE:

If after replacing bulb the tail lamp will not light, check the wiring, the ground at the socket and/or the switch.

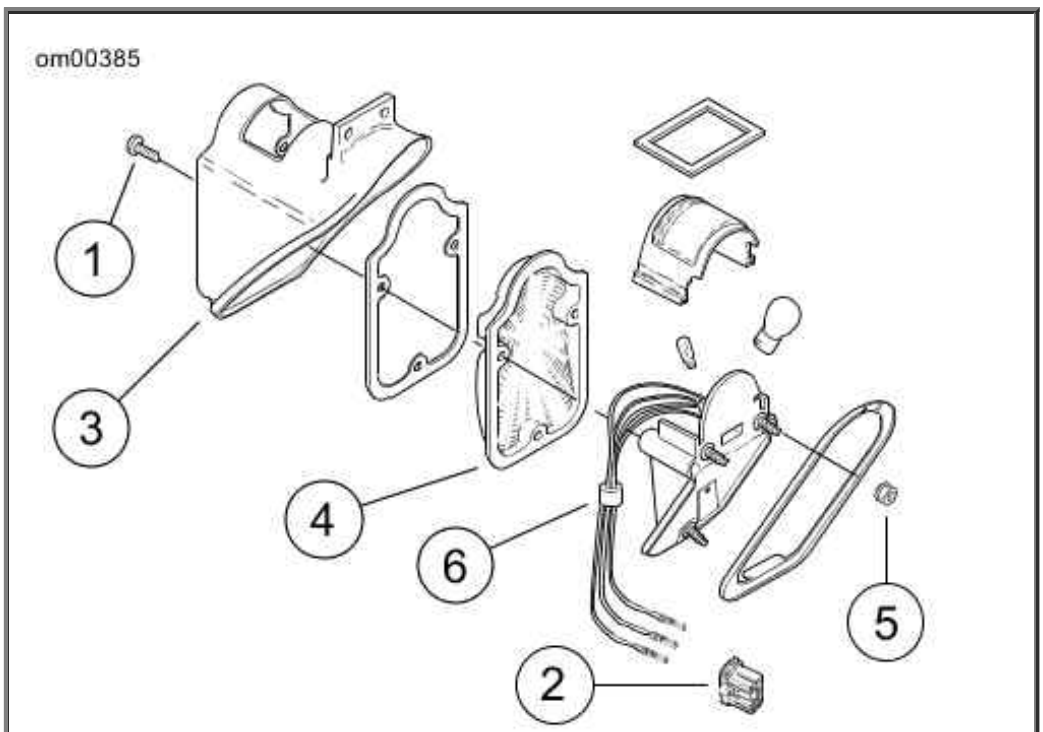

1. Screws (3)
2. Tail lamp connector
3. Lamp housing
4. Lens
5. Nuts (3)
6. Rubber grommet

Tail Lamp Assembly: FLSTSC/FLSTN

FXSTD Tail Lamp/License Plate Bulbs

Tail Lamp Access

1. See Tail Lamp Removal Access Hole: FXSTD Models. Insert a small screwdriver into

the middle hole of the license plate lamp cover. Push forward to release the clip on the tail lamp assembly.

2. See Tail Lamp Removed: FXSTD Models. Lift the tail lamp assembly upward exposing the electrical connectors, tail lamp socket and the two license plate lamp sockets.

Tail Lamp Bulb Removal/Installation

1. See Tail Lamp Assembly: FXSTD Models. Remove the tail lamp bulb socket by turning the socket counterclockwise and pulling outward away from the tail lamp housing.
2. Push in and twist the lamp bulb counterclockwise and pull lamp bulb out of the socket.
3. Orient index pins on **new** lamp bulb with pin guides inside bulb socket.
4. Push lamp bulb into lamp bulb socket and turn clockwise to lock in place.

Tail Lamp Assembly Installation

1. Orient the tail lamp bulb socket with the keyed indents in the tail lamp housing. Push in the tail lamp bulb socket and turn clockwise to lock in place.
2. Route electrical connectors and cables to either side of the fender lamp well, away from the tail lamp bulb socket.

   NOTE:

   When installing the tail lamp assembly, make sure the tail lamp bulb is pointed toward the rear of the vehicle.

3. See Tail Lamp Assembly: FXSTD Models. Install the tail lamp assembly, top first, with the indent in the clip touching the fender to lock in place. Then push the tail lamp assembly toward the front of the vehicle. Engage the rear cup into the opening in the fender lamp well and push down to lock in place. You will hear an audible click.

   NOTE:

   The clip indent must engage with the rear fender opening for the tail lamp to remain locked into position on the rear fender.

License Plate Lamp Bulb Removal/Installation

1. Remove tail lamp housing assembly from fender well.
2. See Tail Lamp Removed: FXSTD Models. Remove the license plate lamp bulb socket by twisting the bulb socket out of the license plate bulb holder.
3. Pull lamp bulb out of the socket.
4. Install **new** license plate lamp bulb by pushing bulb into socket.
5. Install license plate lamp bulb socket back into the license plate bulb holder.

6. Reinstall tail lamp housing assembly.

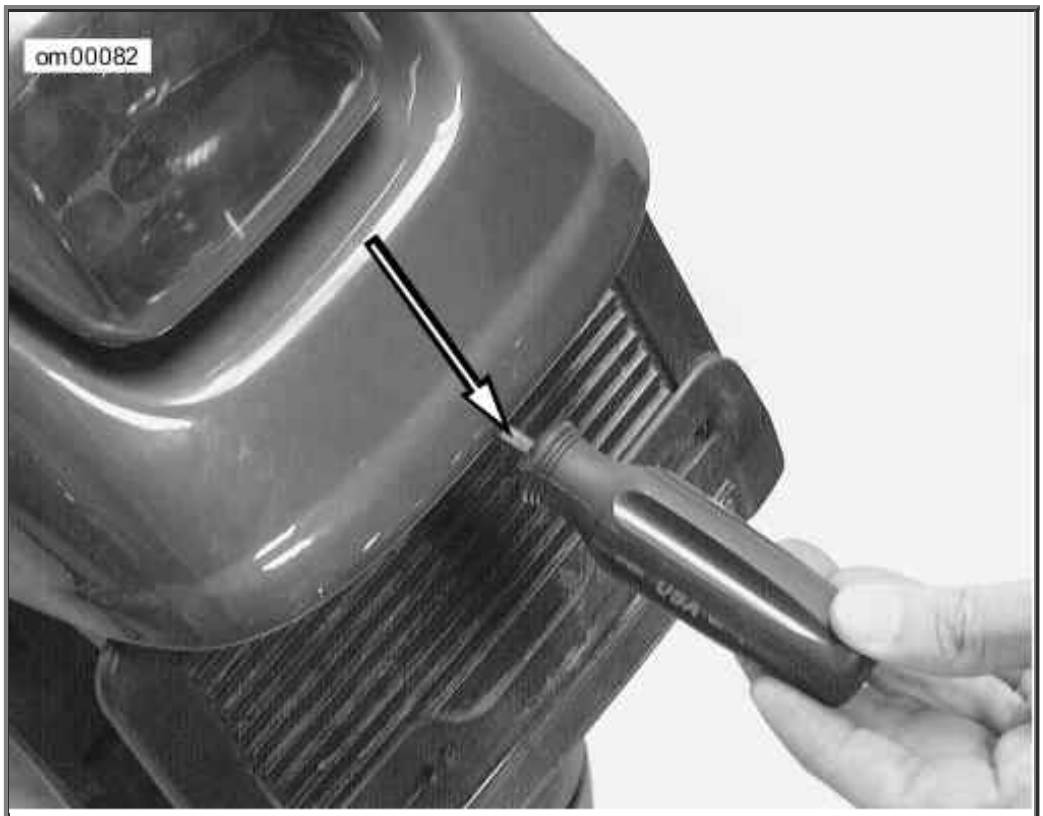

Tail Lamp Removal Access Hole: FXSTD Models

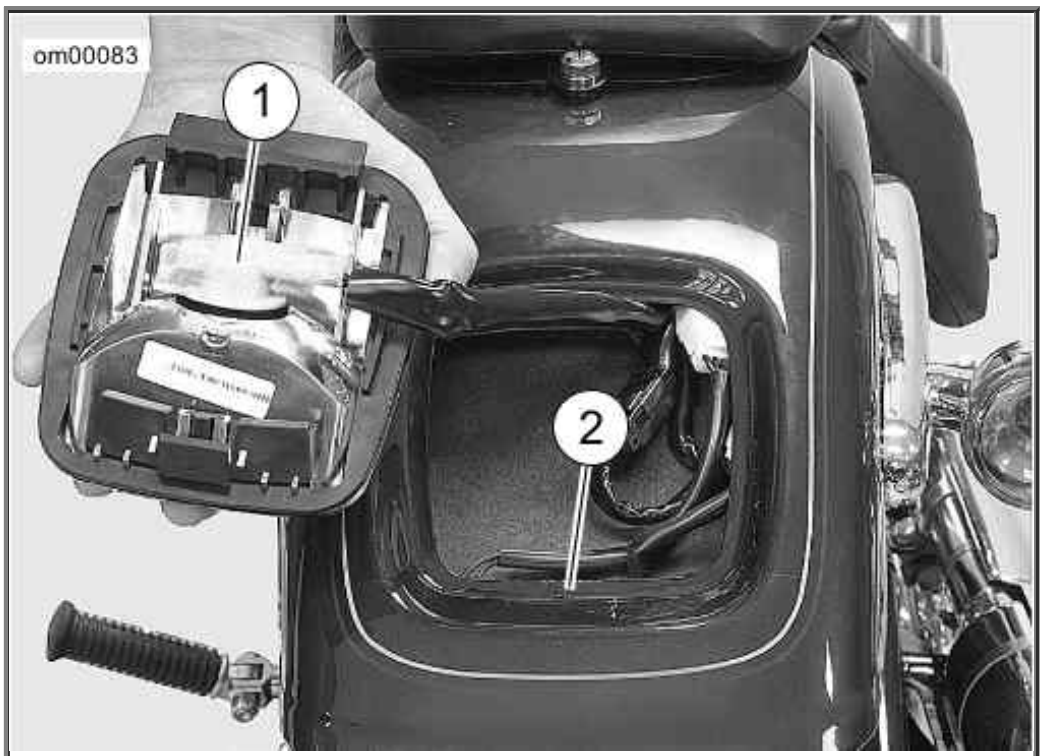

1. Tail lamp socket
2. License plate lamp socket and lamp bulbs under fender

Tail Lamp Removed: FXSTD Models

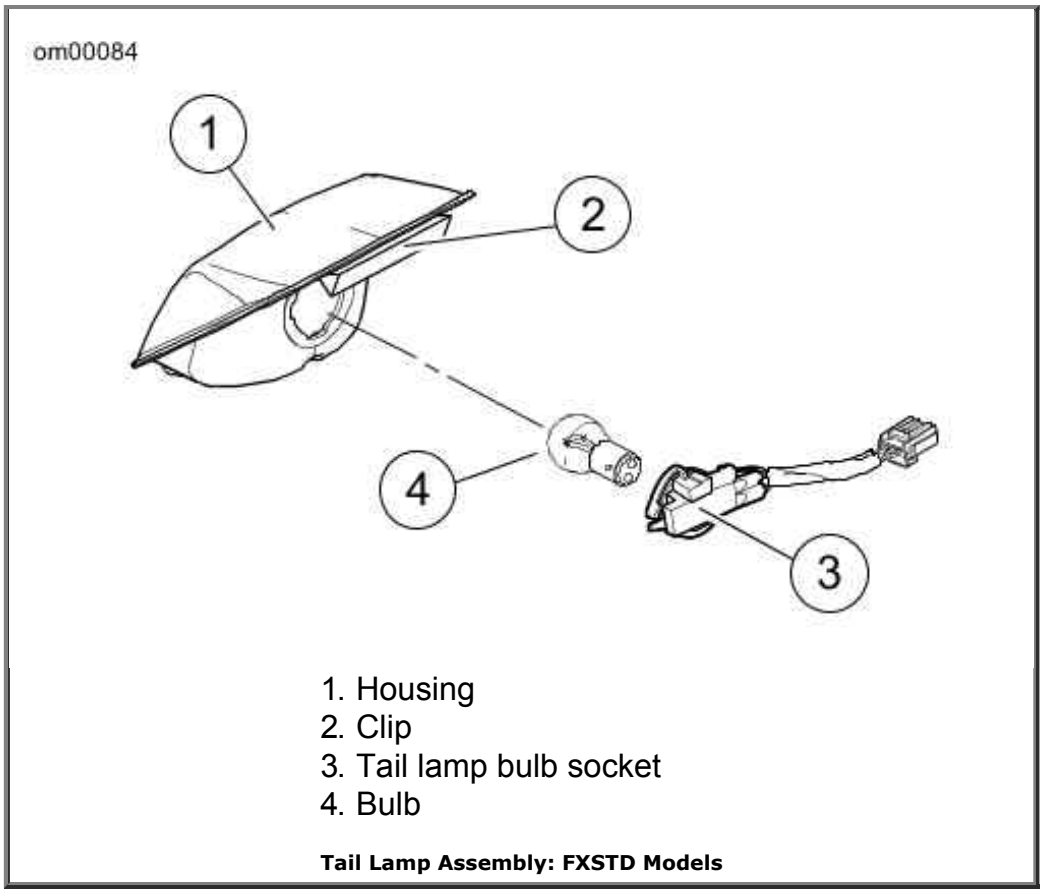

Tail Lamp Assembly: FXSTD Models

Alternator/Voltage Regulator

Charging Rate

The alternator output is controlled and changed to direct current by the voltage regulator.

- The voltage regulator increases charging rate when battery is low or lamps are lit.
- The voltage regulator decreases charging rate when no lamps are lighted and when battery charge is up.

CAUTION

It is possible to overload your motorcycle's charging system by adding too many electrical accessories. If your combined electrical accessories operating at any one time consume more electrical current than your vehicle's charging system can produce, the electrical consumption can discharge the battery and cause vehicle electrical system damage. See a Harley-Davidson dealer for advice about the amount of current consumed by additional electrical accessories, or for necessary wiring changes. (00211b)

A battery voltage LED in the dash will light up when voltage is either too low or too high.

NOTES:

- *This unit requires no interval attention. If any electrical system trouble is experienced that might be traceable to the alternator or voltage regulator, the motorcycle should be taken to a*

Harley-Davidson dealer who has the necessary electrical testing equipment to give the required attention.
- *For model specific information regarding the voltage regulator, refer to the appropriate Service Manual or see a Harley-Davidson dealer.*

Battery: General

Type

Your motorcycle uses a permanently sealed, maintenance-free, lead/calcium and sulfuric acid battery. All batteries are shipped precharged and ready to be put into service. Do not attempt to open the battery for any reason.

Antidotes for Battery Acid

CONTACT	TREATMENT
External	Flush with water.
Internal	Drink large quantities of milk or water, followed by milk of magnesia, vegetable oil or beaten eggs. Get immediate medical attention.
Eyes	Flush with water. Get immediate medical attention.

⚠WARNING

Batteries contain sulfuric acid, which could cause severe burns to eyes and skin. Wear a protective face shield, rubberized gloves and protective clothing when working with batteries. KEEP BATTERIES AWAY FROM CHILDREN. (00063a)

⚠WARNING

Explosive hydrogen gas, which escapes during charging, could cause death or serious injury. Charge battery in a well-ventilated area. Keep open flames, electrical sparks and smoking materials away from battery at all times. KEEP BATTERIES AWAY FROM CHILDREN. (00065a)

⚠WARNING

Batteries, battery posts, terminals and related accessories contain lead and lead compounds, and other chemicals known to the State of California to cause cancer and birth defects or other reproductive harm. Wash hands after handling. (00019d)

⚠WARNING

Never remove warning label attached to top of battery. Failure to read and understand all precautions contained in warning, could result in death or serious injury. (00064a)

1. Contents are corrosive
2. Wear safety glasses
3. Contents are explosive
4. Keep flames away
5. Read instructions
6. Keep away from children

Battery Warning Label

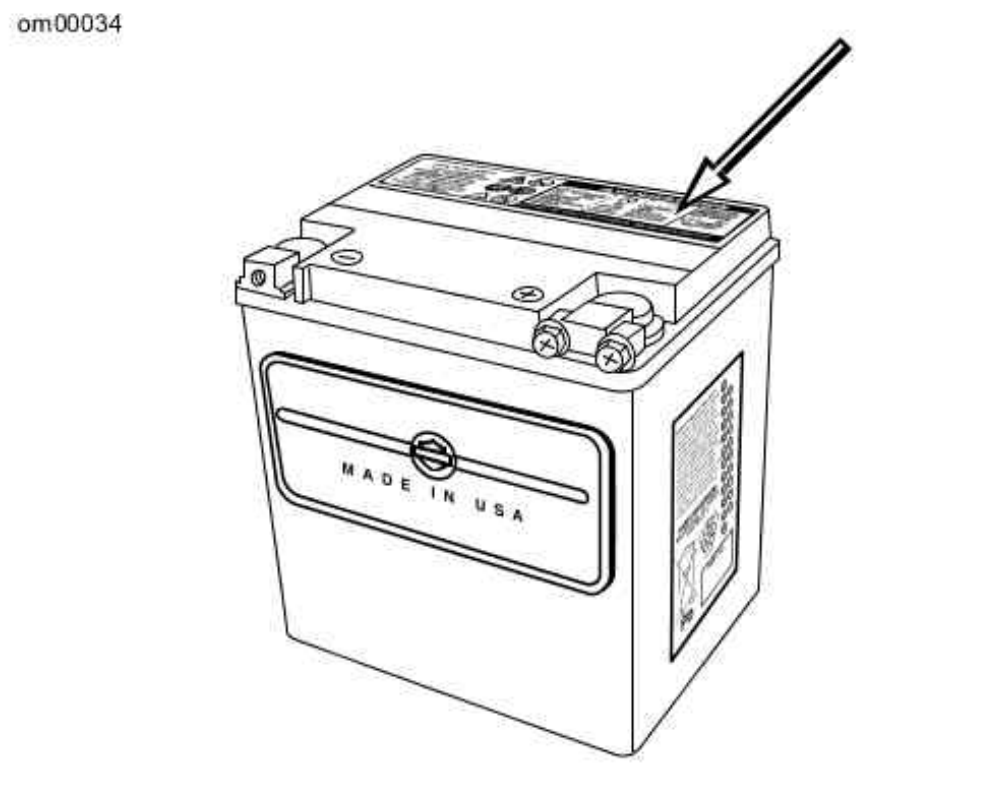

Battery Warning Label Location

Voltmeter Test

You must remove the battery from the vehicle before testing. See Battery: Softail Models.

Refer to Voltmeter Test. The voltmeter test provides a general indicator of battery condition. Check the voltage of the battery to verify that it is in a 100 percent fully charged condition. If the open circuit (disconnected) voltage reading is below 12.6V, charge the battery and then re-check the voltage after the battery has set for one to two hours.

Voltmeter Test

READING IN VOLTS	PERCENT OF CHARGE
12.8	100
12.6	75
12.3	50
12.0	25
11.8	0

Cleaning and Inspection

Battery top must be clean and dry. Dirt and electrolyte on top of the battery can cause battery to self-discharge.

1. Clean battery top with a solution of baking soda (sodium bicarbonate) and water. Use 5 teaspoons baking soda per quart or liter of water.
2. When the solution stops bubbling, rinse off the battery with clean water.
3. Clean cable connectors and battery terminals using a wire brush or fine grit sandpaper to remove any oxidation.
4. Inspect and clean the battery screws, clamps and cables. Check for breakage, loose connections and corrosion.
5. Check the battery posts for melting or damage caused by overtightening.
6. Inspect the battery for discoloration, a raised top or a warped or distorted case. This might indicate that the battery has been frozen, overheated or overcharged.
7. Inspect the battery case for cracks or leaks.

Charging

Never charge a battery without first reviewing the instructions for the charger being used. In addition to the manufacturer's instructions, follow these general safety precautions.

Charge the battery if any of the following conditions exist:

- Vehicle lamps appear dim.
- Electric starter sounds weak.
- Battery has not been used for an extended period of time.

⚠WARNING

Explosive hydrogen gas, which escapes during charging, could cause death or serious injury. Charge battery in a well-ventilated area. Keep open flames, electrical sparks and smoking materials away from battery at all times. KEEP BATTERIES AWAY FROM CHILDREN. (00065a)

⚠WARNING

Batteries contain sulfuric acid, which could cause severe burns to eyes and skin. Wear a protective face shield, rubberized gloves and protective clothing when working with batteries. KEEP BATTERIES AWAY FROM CHILDREN. (00063a)

1. Perform a voltmeter test to determine the state of charge. If battery needs to be charged, proceed to the next step.

CAUTION

Remove battery from motorcycle before charging. Electrolyte leakage will damage motorcycle parts. (00213a)

2. Remove the battery from the motorcycle. See Battery: Softail Models.
3. Place the battery on a level surface.

⚠WARNING

Unplug or turn OFF battery charger before connecting charger cables to battery. Connecting cables with charger ON can cause a spark and battery explosion, which could result in death or serious injury. (00066a)

⚠WARNING

Connect positive (+) battery cable first. If positive (+) cable should contact ground with negative (-) cable connected, the resulting sparks can cause a battery explosion, which could result in death or serious injury. (00068a)

⚠WARNING

Disconnect negative (-) battery cable first. If positive (+) cable should contact ground with negative (-) cable connected, the resulting sparks can cause a battery explosion, which could result in death or serious injury. (00049a)

CAUTION

Do not reverse the charger connections described in the following steps or the charging system of the motorcycle could be damaged. (00214a)

NOTES:

- *The figures listed in the Amp-hour table assume that the battery is charging at room temperature. If warmer than room temperature, use a slightly shorter charging time. If colder, use a slightly longer charging time.*
- *The use of constant current chargers to charge sealed maintenance free batteries is not recommended. Any overcharge will cause dry-out and premature battery failure. If a constant current charger is the only type available, do not exceed the charge times listed in 19 Amp Hour Battery Charging Rates/Times and do not continue charging the battery if it gets hot. When charging, never exceed 15 volts.*

4. Connect the red battery charger lead to positive (+) terminal of the battery.

5. Connect the black battery charger lead to negative (-) terminal of the battery.

NOTE:

If the battery is still in the vehicle, connect the negative lead to the chassis ground. Make sure that the ignition and all electrical accessories are turned off.

6. Step away from the battery and turn on the charger.

⚠WARNING

Unplug or turn OFF battery charger before disconnecting charger cables from battery. Disconnecting clamps with charger ON can cause a spark and battery explosion, which could result in death or serious injury. (00067a)

7. After the battery is fully charged, turn OFF the charger and disconnect the black battery charger lead to the negative (-) terminal of the battery.

8. Disconnect the red battery charger lead to the positive (+) terminal of the battery.

9. Mark the charging date on the battery.

19 Amp Hour Battery Charging Rates/Times

READING (VOLTS)	PERCENT OF CHARGE	3 AMP CHARGER	6 AMP CHARGER	10 AMP CHARGER	20 AMP CHARGER
12.8	100	-	-	-	-
12.6	75	1.75 hours	50 minutes	30 minutes	15 minutes
12.3	50	3.5 hours	1.75 hours	1 hour	30 minutes
12.0	25	5 hours	2.5 hours	1.5 hours	45 minutes
11.8	0	6 hours 40 minutes	3 hours 20 minutes	2 hours	1 hour

Storage

CAUTION

Turn engine over a few times to be sure there is no oil in the crankcase and that all oil has been pumped back into the oil tank. Stop engine and re-check oil level. Failure to do so can result in engine damage. (00071a)

CAUTION

Do not allow battery to completely discharge. The electrolyte in a discharged battery will freeze. The more discharged a battery is, the more easily it can freeze and crack the battery case. (00218a)

If the motorcycle will not be operated for several months, such as during the winter season, remove the battery from the motorcycle and fully charge.

Self-discharge is a normal condition and occurs continuously. The rate of self-discharge depends on the ambient temperature and the battery's state of charge.

- Batteries discharge at a faster rate at higher ambient temperatures.
- To reduce the self-discharge rate, store battery in a cool (not freezing), dry place.
- Charge the battery every month if stored at temperatures below 60° F. (16° C).
- Charge the battery more frequently if stored in a warm area above 60° F. (16° C).

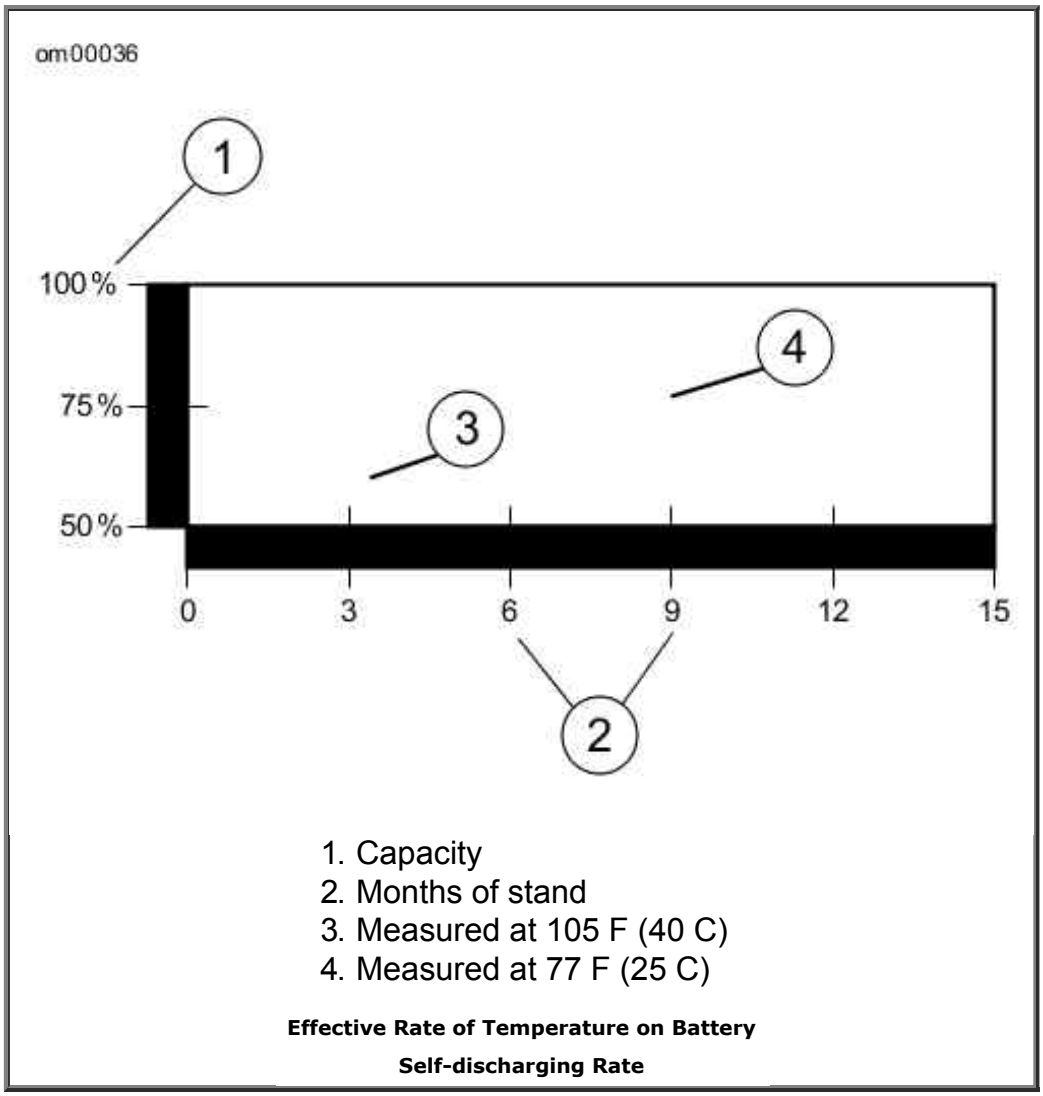

Battery: Softail Models

Disconnection and Removal

Before you can inspect or disconnect your battery you must read the section containing information about seat removal.

⚠WARNING

Disconnect negative (-) battery cable first. If positive (+) cable should contact ground with negative (-) cable connected, the resulting sparks can cause a battery explosion, which could result in death or serious injury. (00049a)

1. Unthread bolt and remove battery negative cable (black) from battery negative (-) terminal.
2. Unthread bolt and remove battery positive cable (red) from battery positive (+) terminal.
3. Lift battery from battery box within oil tank cavity.

Installation and Connection

CAUTION

Do not over-tighten bolts on battery terminals. Use recommended torque values. Over-tightening battery terminal bolts could result in damage to battery terminals. (00216a)

⚠WARNING

Connect positive (+) battery cable first. If positive (+) cable should contact ground with negative (-) cable connected, the resulting sparks can cause a battery explosion, which could result in death or serious injury. (00068a)

⚠WARNING

Do not allow positive (+) battery cable to contact ground with negative (-) cable connected. Resulting sparks can cause a battery explosion, which could result in death or serious injury. (00069a)

1. Place the fully charged battery into the battery box located within oil tank cavity, terminal side forward.
2. Install battery positive cable (+) (red) to battery positive (+) terminal.
3. Tighten fastener to 60-96 in-lbs (6.8-10.8 Nm).
4. Install battery negative cable (black) to battery negative (-) terminal.
5. Tighten fastener to 60-96 in-lbs (6.8-10.8 Nm).

CAUTION

Keep battery clean and lightly coat terminals with petroleum jelly to prevent corrosion. Failure to do so could result in damage to battery terminals. (00217a)

6. Apply a light coat of petroleum jelly or corrosion retardant material to both battery terminals.

⚠WARNING

After installing seat, pull upward on front of seat to be sure it is in locked position. While riding, a loose seat can shift causing loss of control, which could result in death or serious injury. (00070a)

7. Install seat.

Jump Starting

Harley-Davidson does not recommend jump-starting a motorcycle. However, there may be circumstances when it is necessary to do so. Therefore, we suggest jump-starting be performed as follows:

⚠WARNING

Be sure jumper cables touch only appropriate battery terminals or ground. Allowing jumper cables to touch each other can result in sparks and a battery explosion, which could result in death or serious injury. (00072a)

⚠WARNING

Explosive hydrogen gas, which escapes during charging, could cause death or serious injury. Charge battery in a well-ventilated area. Keep open flames, electrical sparks and smoking materials away from battery at all times. KEEP BATTERIES AWAY FROM CHILDREN. (00065a)

CAUTION

Harley-Davidson motorcycles have a 12 Volt battery. Be sure the booster vehicle has a 12 Volt system. Failure to do so could result in vehicle damage. (00220a)

NOTE:

This procedure presumes the BOOSTER battery is in another vehicle.

1. Turn off all unnecessary lamps and accessories.

Positive Cable

2. See Jump Start Cable Connections. Connect one end of a jumper cable to the DISCHARGED battery positive (+) terminal (1).
3. Connect the other end of the same cable to the BOOSTER battery positive (+) terminal (2).

Negative Cable

⚠WARNING

Do not connect negative (-) cable to or near the discharged battery negative (-) terminal. Doing so could cause a spark and explosion, which could result in death or serious injury. (00073a)

4. Connect one end of a jumper cable to the BOOSTER battery negative (-) terminal (3).

CAUTION

Do not connect the negative (-) cable to painted or chrome parts. Doing so could result in discoloration at the attachment point. (00221a)

5. Connect other end of the same cable (4) to a safe ground, (away from the DISCHARGED battery).
6. Start motorcycle.
7. Disconnect cables in reverse order of steps 2, 3, 4, 5. That is: steps 5, 4, 3, 2.

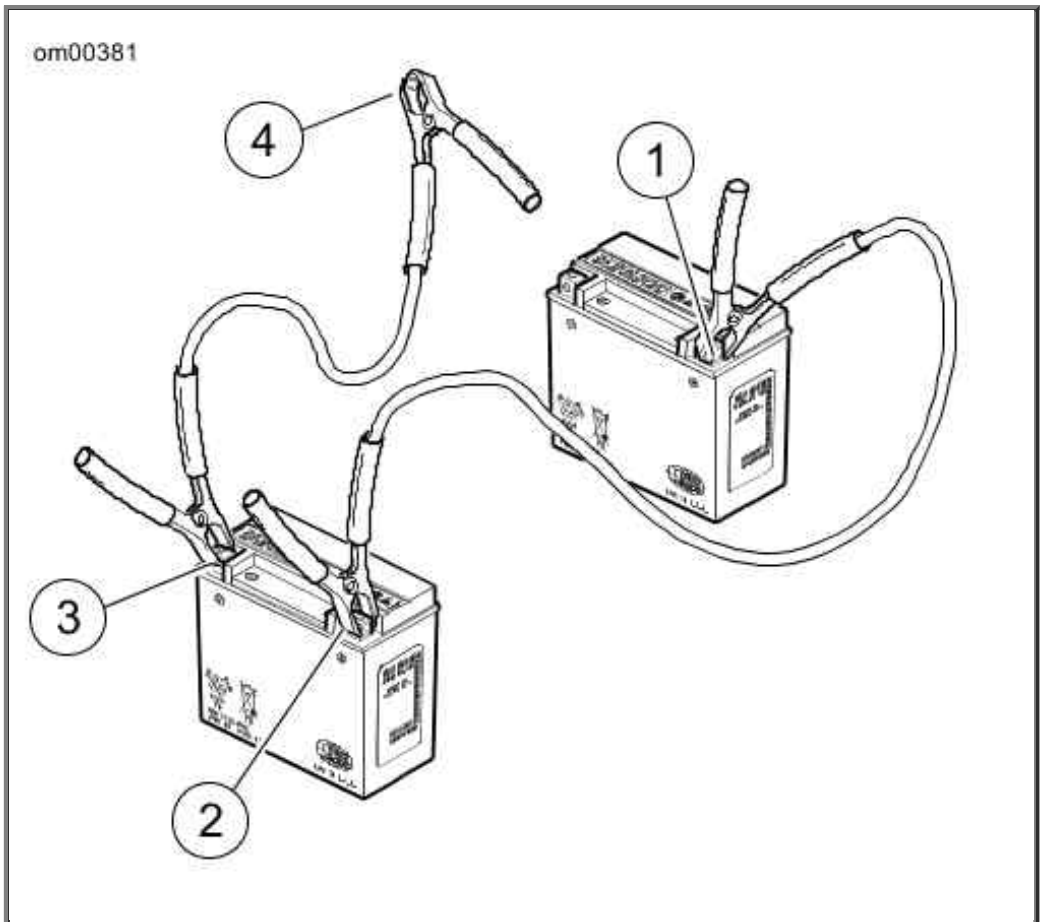

1. Discharged battery positive (+) terminal
2. Booster battery positive (+) terminal
3. Booster battery negative (-) terminal
4. Ground

Jump Start Cable Connections

Electrical Protection: Softail Models

Fuses

See Fuse Block Location: Softail Models. The fuse block is below the seat and behind the battery. The block on carbureted models contains six 15 ampere replaceable fuses. The block on EFI models contains eight 15 ampere replaceable fuses. Additional spare fuses may be carried if the rider chooses to do so.

Fuse Removal

1. Remove seat.

⚠WARNING

To prevent accidental vehicle start-up, which could cause death or serious injury, disconnect negative (-) battery cable before proceeding. (00048a)

2. Disconnect and remove battery negative (-) cable (black) from battery negative (-) terminal.
3. Pull cover away from fuse block.

CAUTION

Always use replacement fuses that are of the correct type and amperage rating. Use of incorrect fuses can result in damage to electrical systems. (00222a)

4. See Fuse Block: Softail Models (top view). Replace suspect fuse.

Fuse Installation

1. Place cover over fuse block.
2. Install battery negative cable (black) to battery negative (-) terminal.
3. Tighten fastener to 60-96 in-lbs (6.8-10.8 Nm).

⚠WARNING

After installing seat, pull upward on front of seat to be sure it is in locked position. While riding, a loose seat can shift causing loss of control, which could result in death or serious injury. (00070a)

4. Install seat.

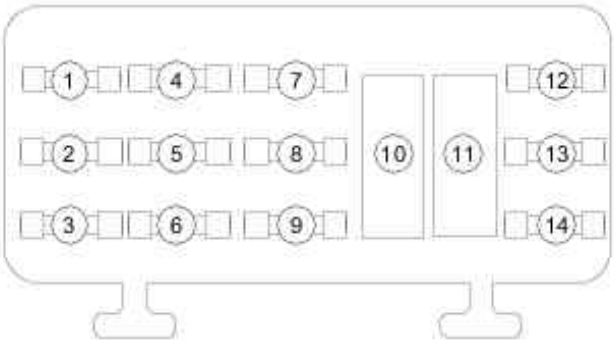

1. ECM 15 amp (EFI only)
2. Fuel pump 15 amp (EFI only)
3. Empty
4. Empty
5. Battery
6. Accessories
7. Instruments
8. Ignition
9. Lamps
10. Start relay
11. System relay
12. Spare fuse (15 amp)
13. Spare fuse (15 amp)
14. Empty

Fuse Block: Softail Models (top view)

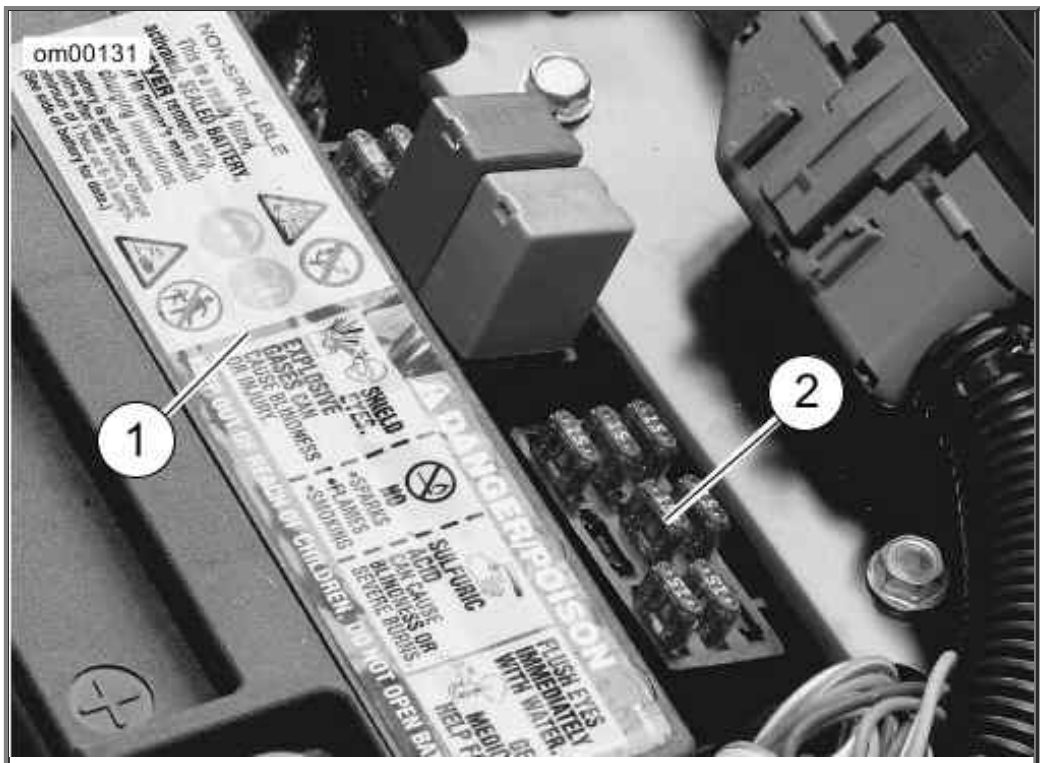

1. Battery
2. Fuse block

Fuse Block Location: Softail Models

Seats: Softail Models

General

See Seat Tongue and Frame Back. All Softail Harley-Davidson motorcycles have a tongue underneath the seat that slides into a slot in the back end of frame.

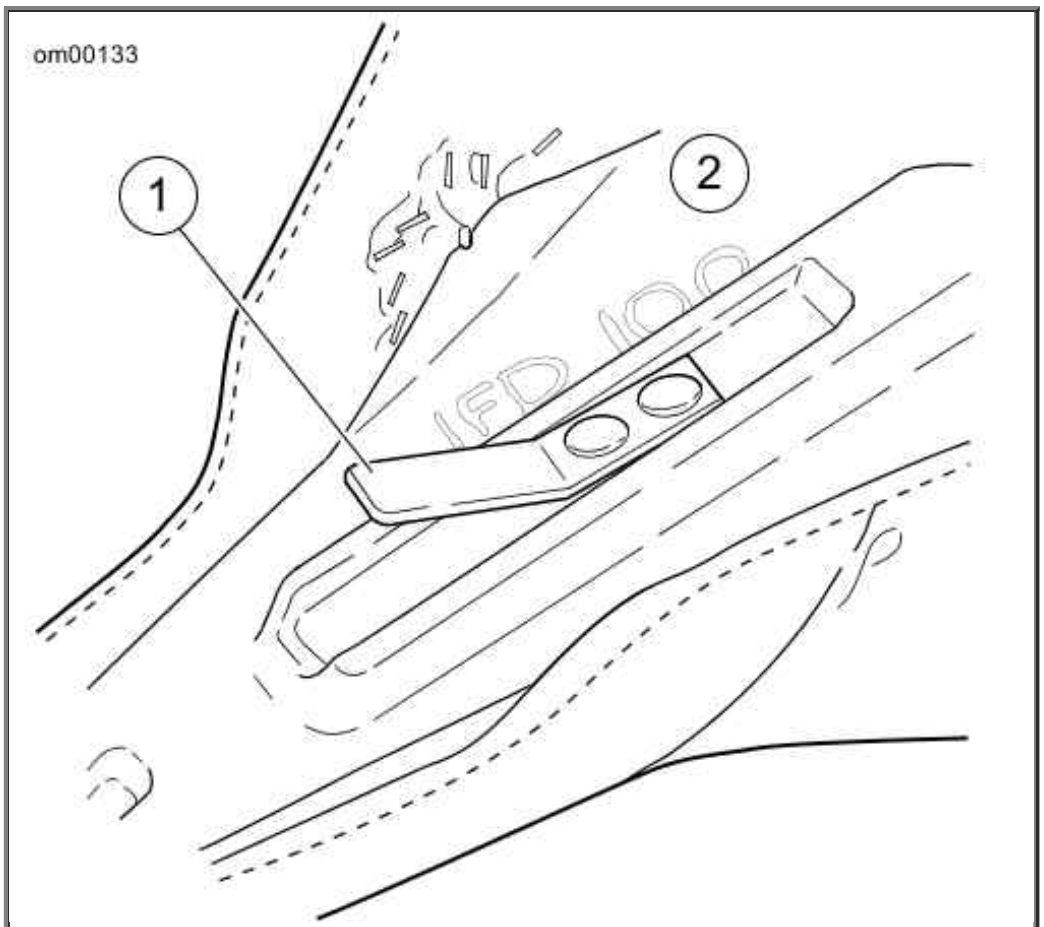

1. Tongue
2. Seat bottom

Seat Tongue

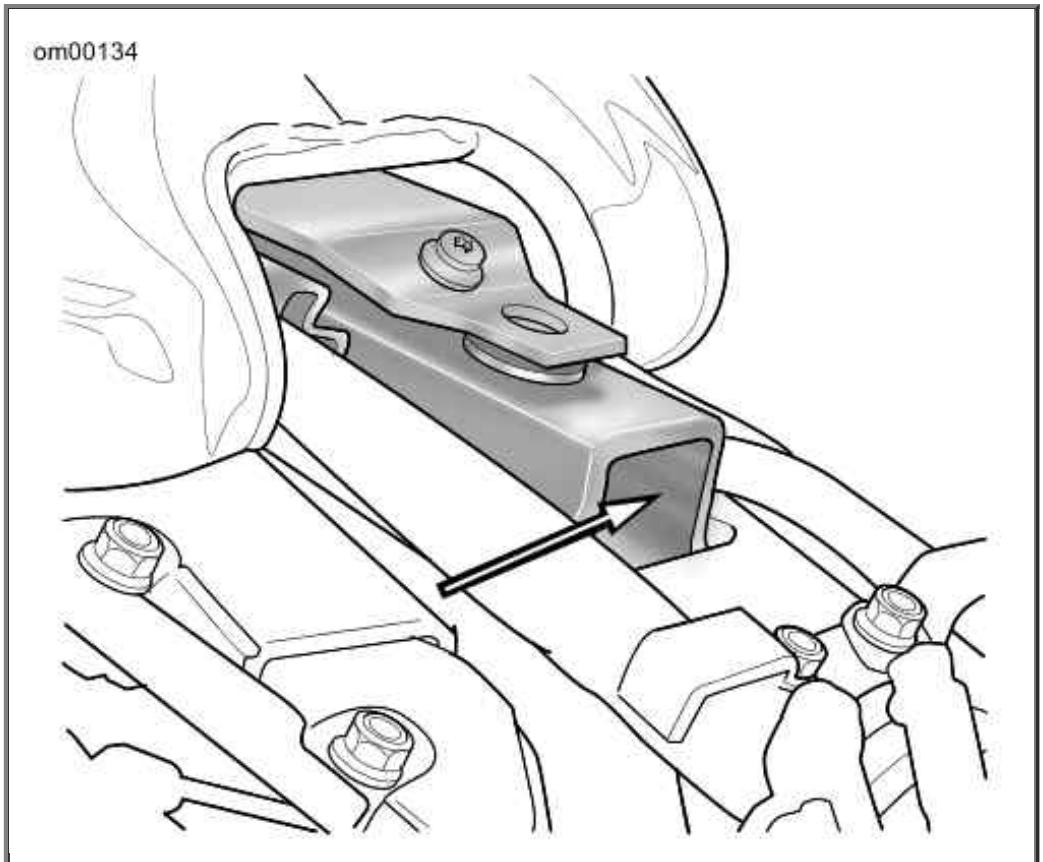

Frame Back

Seats: FL Softail Models (Except FLSTSC/FLSTN)

Removal

1. See Seat: FLSTC/FLSTF. Remove seat mounting screw from top of rear fender.
2. Remove two mounting fasteners (5) located on both sides of the seat.
3. See Seat Strap: Softail Models. Locate the seat strap bracket on the LEFT side of the motorcycle.
4. Loosen strap bracket by grasping and pressing down firmly.
5. See Pushing/Pulling Strap Bracket. Pull out to free the left side of the strapbracket.
6. See Seat Tongue. Push seat rearward to free tongue at front of seat from slot or bracket located in frame back.

   NOTES:
   - *For FLSTC models skip step 7 and proceed to step 9.*
   - *For FLSTF models proceed to step 7.*

7. Turn seat over to reveal a looped snap on the seat strap.
8. Unsnap loop to loosen seat strap.
9. Slide seat through seat strap to remove.

   NOTE:

To detach pillion seat from drivers seat, remove the pillion mounting fasteners.

Installation

NOTES:

- *See Seat: FLSTC/FLSTF. To attach pillion seat to driver's seat, tighten the pillion mounting fasteners until snug.*
- *For FLSTC models skip step 1 and proceed to step 3.*
- *For FLSTF models proceed with step 1.*

1. Locate looped snap on seat strap.
2. See Seat: FLSTC/FLSTF. Place seat through the seat strap.
3. Snap loop together to tighten seat strap.
4. Slide seat toward front of motorcycle until the tongue locks into the open end of the frame back.
5. Install the two seat (5) mounting fasteners to the frame; secure until snug.
6. Install pillion mounting fastener on fender. Secure until snug.
7. See Remove/Placing Strap Bracket. Place seat strap bracket end over mounting fasteners in frame.
8. See Pushing/Pulling Strap Bracket. Pull up on strap bracket to ensure fit. Secure until snug.

⚠WARNING

After installing seat, pull upward on front of seat to be sure it is in locked position. While riding, a loose seat can shift causing loss of control, which could result in death or serious injury. (00070a)

9. See Seat Strap: Softail Models. Pull up on seat to verify that it is properly secured.

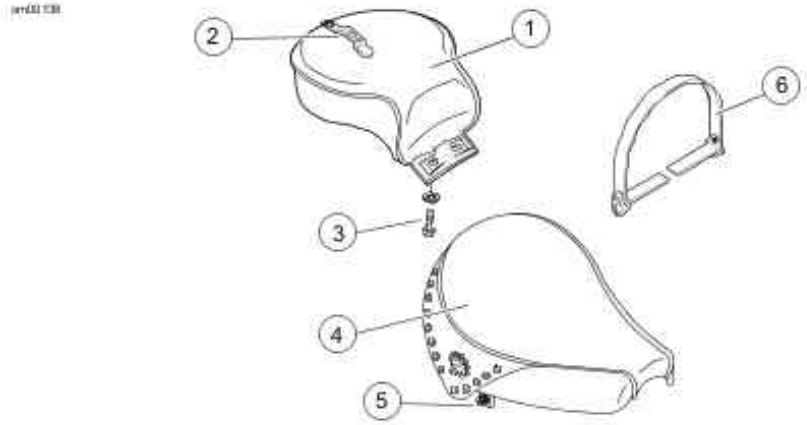

1. Pillion
2. Seat mounting bracket
3. Pillion mounting fasteners
4. Driver seat
5. Seat mounting fasteners
6. Seat strap

Seat: FLSTC/FLSTF

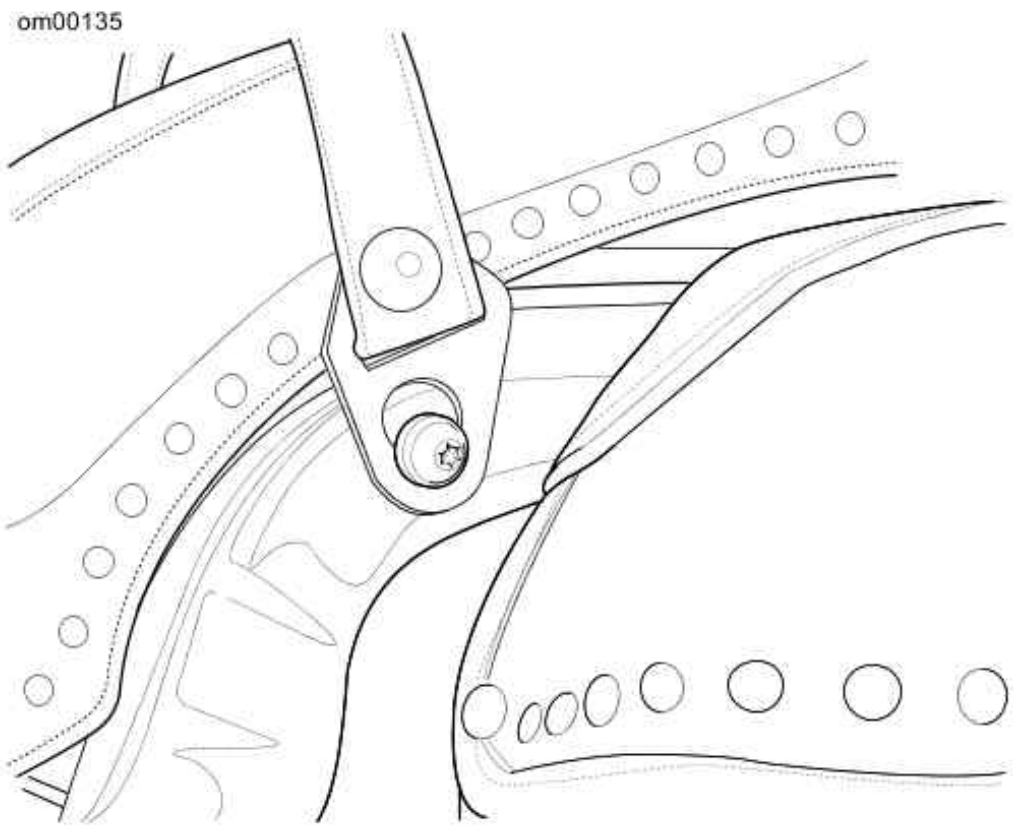

Seat Strap: Softail Models

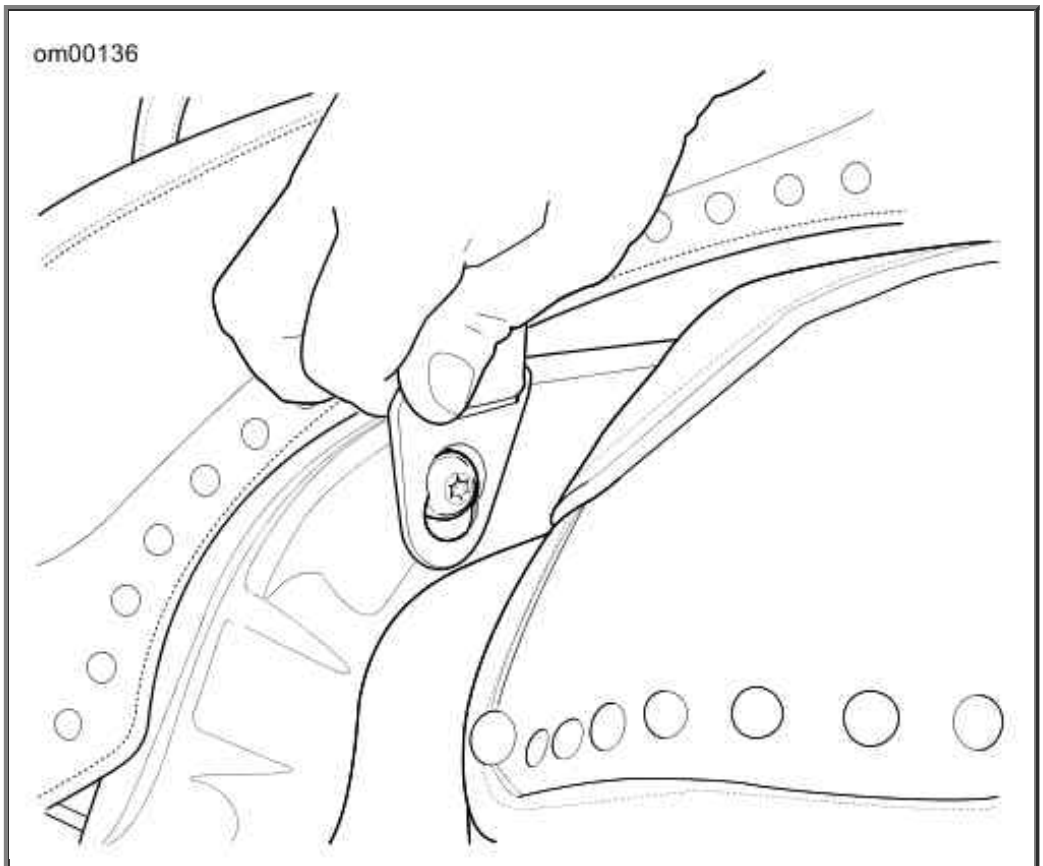

Pushing/Pulling Strap Bracket

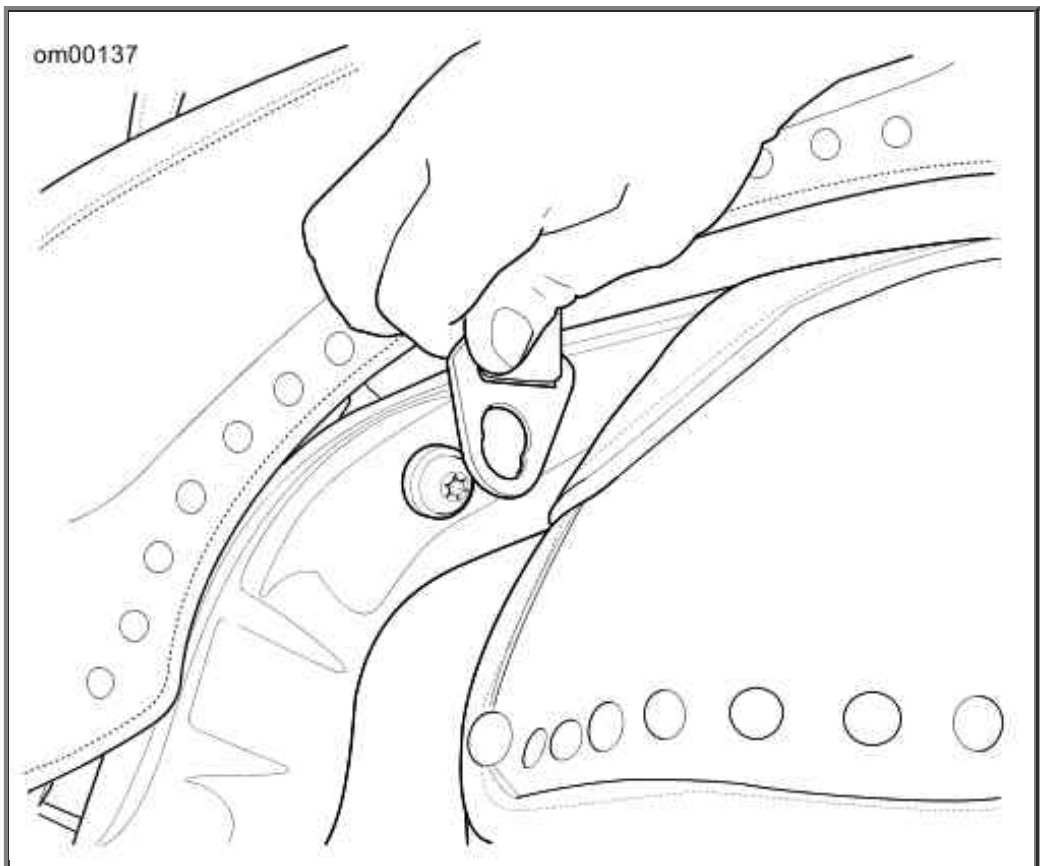

Remove/Placing Strap Bracket

Seats: FLSTSC/FLSTN

Removal/Installation

⚠WARNING

After installing seat, pull upward on front of seat to be sure it is in locked position. While riding, a loose seat can shift causing loss of control, which could result in death or serious injury. (00070a)

See Seat: FLSTSC/FLSTN Models. The passenger seat attaches with a single thumbscrew (1) at the rear and engages the seat mounting nuts (4) at the front.

To remove seat, remove passenger seat (2, 7) and seat mounting nuts (4). When installing seat, insert tang at front of seat into the channel in the frame and install seat mounting nuts. Install passenger seat.

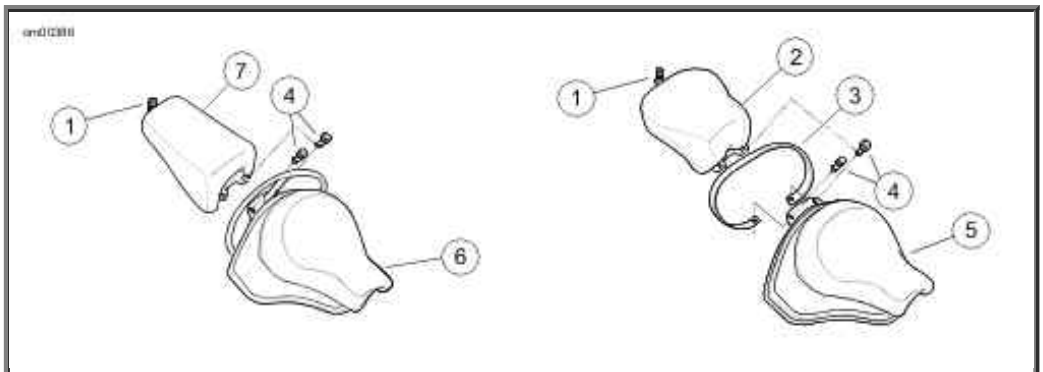

1. Thumbscrew
2. Passenger seat (FLSTSC)
3. Seat strap (FLSTSC)
4. Seat mounting nut (2)
5. Seat (FLSTSC)
6. Seat (FLSTN)
7. Passenger seat (FLSTN)

Seat: FLSTSC/FLSTN Models

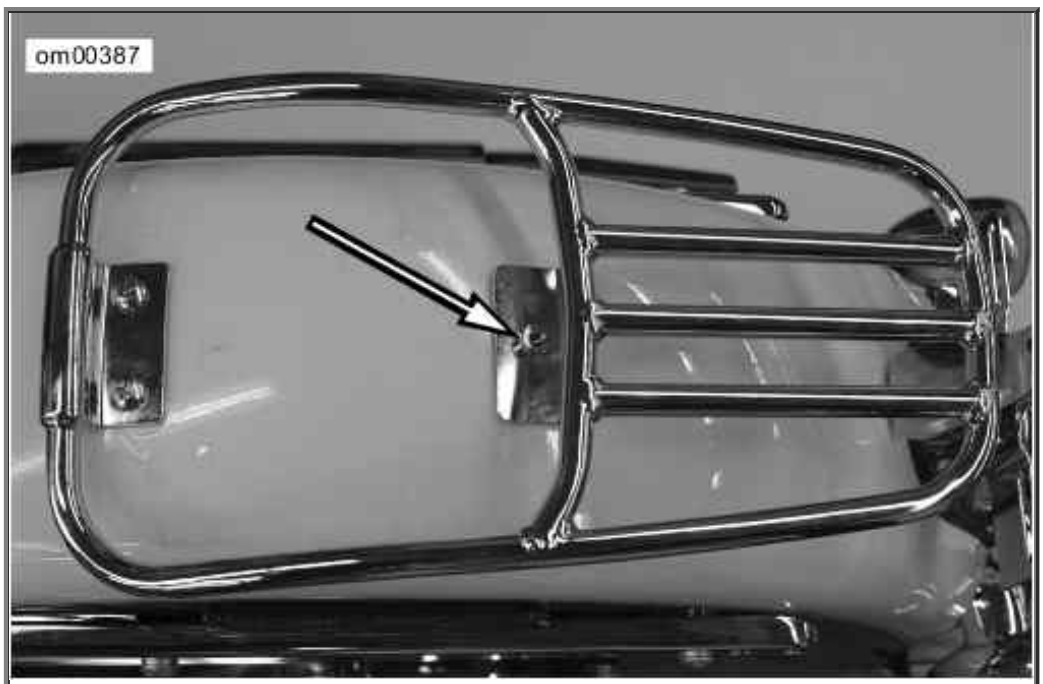

Seat Mounting Stud

Seats: FX Softail Models

Removal

1. See Seat: FX Softail Models. Remove seat mounting screw from top of rear fender.
2. See Seat Tongue. Push seat rearward to free tongue at front of seat from slot or bracket in frame back.
3. Remove seat from frame.
4. Install seat mounting screws to fender. Secure until snug.

NOTE:

The FXSTB model does not have a removable seat bracket. It is riveted to the bottom of the seat.

Installation

1. Place seat on frame back.
2. Slide seat toward front of motorcycle until the tongue locks into the bracket or slot in the frame back.
3. Push seat forward until rear fender seat retention nut is centered in hole of mounting bracket.
4. Install seat mounting screw.

⚠WARNING

After installing seat, pull upward on front of seat to be sure it is in locked position. While riding, a loose seat can shift causing loss of control, which could result in death or serious injury. (00070a)

5. Pull up on seat to verify that it is properly secured.

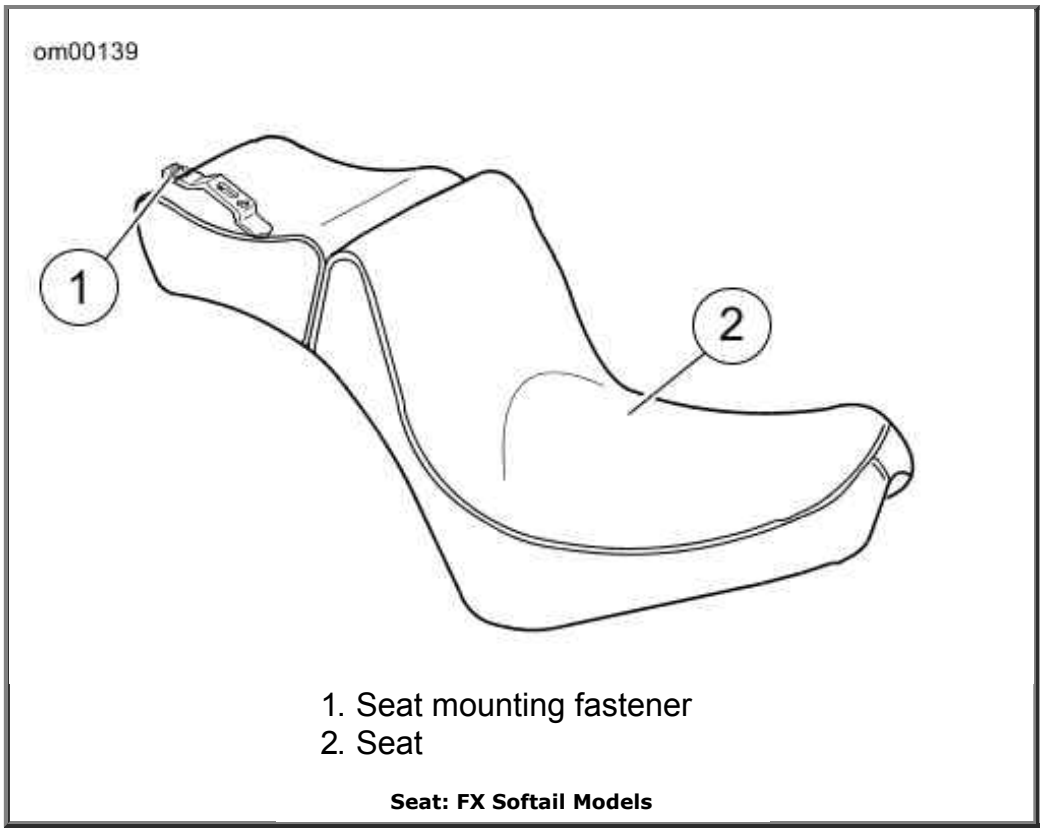

1. Seat mounting fastener
2. Seat

Seat: FX Softail Models

Motorcycle Storage

Placing Motorcycle in Storage

CAUTION

Proper storage is important for the trouble-free operation of your motorcycle. See your Owner's Manual for storage recommendations or see a Harley-Davidson dealer. Improper storage procedures can lead to equipment damage. (00046a)

If the motorcycle will not be operated for several months, such as during the winter season, there are several tasks which should be performed. These steps will protect parts against corrosion, preserve the battery and prevent the build-up of gum and varnish in the fuel system.

⚠WARNING

Do not store motorcycle with gasoline in tank within the home or garage where open flames, pilot lights, sparks or electric motors are present. Gasoline is extremely flammable and highly explosive, which could result in death or serious injury. (00003a)

NOTE:

Make a list of everything you do and fasten it to a handgrip. When you take the motorcycle out of storage, this list will be your reference/checklist to get your motorcycle in operating condition.

1. Fill fuel tank and add a gasoline stabilizer. Use one of the commercially available gasoline stabilizers and follow the manufacturer's instructions.

2. Warm motorcycle to operating temperature. Change oil and turn engine over to circulate the new oil.

3. Turn fuel supply valve OFF (if applicable).

4. Adjust the belt.

5. Check tire inflation. Adjust to proper inflation pressure.

6. To protect the vehicle's body panels, engine, chassis and wheels from corrosion, follow the cosmetic care procedures described in the Accessory Maintenance section of this owner's manual prior to storage.

7. Prepare battery for winter storage. See Battery: General.

⚠WARNING

Explosive hydrogen gas, which escapes during charging, could cause death or serious injury. Charge battery in a well-ventilated area. Keep open flames, electrical sparks and smoking materials away from battery at all times. KEEP BATTERIES AWAY FROM CHILDREN. (00065a)

8. If the motorcycle is to be stored with security system armed, it will be necessary to connect a Battery Tender to maintain battery charge. If security system will not be armed and a Battery Tender is not available, either:

    a. Disconnect negative battery cable.

    b. Remove Maxi-fuse (if applicable).

9. If motorcycle is to be covered, use a material such as light canvas that will breathe. Plastic materials that do not breathe promote the formation of condensation.

Removing Motorcycle From Storage

⚠WARNING

The clutch failing to disengage can cause loss of control, which could result in death or serious injury. Prior to starting after extended periods of storage, place transmission in gear and push vehicle back and forth several times to assure proper clutch disengagement. (00075a)

1. See Battery: General for proper battery care. Charge and install the battery.

2. Remove and inspect the spark plugs. Replace if necessary.

3. Clean the air cleaner element.

4. Start the engine and run until it reaches normal operating temperature. Turn off engine.
5. Check amount of oil in the oil tank.
6. Check the transmission lubricant level.
7. Check controls to be sure they are operating properly. Operate the front and rear brakes, throttle, clutch and shifter.
8. Check steering for smoothness by turning the handlebars through the full operating range.

⚠WARNING

Be sure tires are properly inflated, balanced and have adequate tread. Inspect your tires regularly and see a Harley-Davidson dealer for replacements. Riding with excessively worn, unbalanced or under-inflated tires can adversely affect stability and handling, which could result in death or serious injury. (00014a)

9. Check tire pressure. Incorrect pressure will result in poor riding characteristics and can affect handling and stability.
10. Check all electrical equipment and switches including the stop lamp, turn signals and horn for proper operation.
11. Check for any fuel, oil or brake fluid leaks.

CAUTION

Turn engine over a few times to be sure there is no oil in the crankcase and that all oil has been pumped back into the oil tank. Stop engine and re-check oil level. Failure to do so can result in engine damage. (00071a)

Accessories Maintenance

General Maintenance

Maintain chrome and aluminum regularly to check that they retain their original shine and luster. Take care to keep your new Harley-Davidson motorcycle cleaned and waxed as often as possible to inhibit rust and corrosion.

Cleaning Your Motorcycle

To aid you in keeping your motorcycle clean, see your Harley-Davidson dealer for cleaning, polishing and waxing products.

Harley-Davidson recommends the following products:

- SUNWASH (Part No. 94659-98): for general cleaning/washing of all surfaces.

- BUG REMOVER (Part No. 94657-98): for removing bugs from all surface finishes.
- HARLEY SPRAY CLEANER (Part No. 99817-99): all purpose cleaner and quick detailer for metal surfaces.
- HARLEY GLOSS (Part No. 94627-98): all purpose surface protectant provides UV protection and a gloss finish.

⚠WARNING

Observe warnings on labels of cleaning compounds. Failure to follow warnings could result in death or serious injury. (00076a)

⚠WARNING

Do not wash brake discs with cleaners containing chlorine or silicone. Cleaners containing chlorine and silicone can impair brake function, which could result in death or serious injury. (00077a)

⚠WARNING

Do not let the brakes, engine, mufflers or air cleaner to get wet when washing your motorcycle. Allowing these components to get too wet can adversely affect their performance, which could result in death or serious injury. Start engine immediately after washing, and make sure brakes and engine are operating properly before riding in traffic. (00078a)

Leather Care

NOTE:

Many Harley-Davidson accessories and seats are either made of leather or have leather inserts. Natural materials age differently and require different care than man-made materials. Seat covers and panels made of leather will gain "character", such as wrinkles, with age. Leather is porous and organic and each leather product will settle into its own distinct form with use. Your leather product will mature into its own custom shape and style from the sun, rain and the miles. This maturing is natural and will enhance the custom quality of your Harley-Davidson motorcycle.

Leather must be periodically cleaned and treated to maintain its appearance and extend its life. Clean and treat leather once a season or more frequently under adverse conditions.

CAUTION

Do not use bleach or detergents containing bleach on saddlebags, seats, tank panels or painted surfaces. Doing so can result in equipment damage. (00229a)

- Do not use ordinary soap to clean leather or fur. It could dry or remove the oils from the leather.

- Use ONLY a good quality saddle soap to clean leather. Be sure you rinse saddle soap off thoroughly before treating leather.
- Never try to dry leather quickly, using artificial means. Always let leather dry naturally, at room temperature.

1. Vacuum or blow dust off.

2. Thoroughly clean leather with a good quality saddle soap, following manufacturer's directions. Rinse thoroughly with clean sponge or cloth and water. Allow leather to dry.

3. Once leather is dry, treat with a good quality leather treatment, such as LEATHERCARE (Part No. 98261-91).

4. Always allow leather to dry completely before using.

Whitewall Tires

Use a good quality, commercial whitewall cleaner and follow the manufacturer's directions.

Wheel Care

⚠WARNING

Be careful not to get the brakes wet when washing vehicle. Wet brake pads and/or discs can adversely affect brake performance, which could result in death or serious injury. (00079a)

Some vehicle's wheels are aluminum and do not have a protective coating. Other vehicles have laced wheels with chrome plated rims and zinc or chrome plated spokes. Damage from harsh chemicals, acid based wheel cleaners, brake dust and lack of maintenance can occur. Regular washing and the use of a corrosion protectant will help to maintain their original appearance. Harley-Davidson WHEEL AND TIRE CLEANER (Part No. 94658-98) is recommended for cleaning wheels and tires. Then use HARLEY GLOSS (Part No. 94627-98) to protect the wheel surfaces.

NOTES:

- *It is imperative that the wheels are cared for weekly to guard against pitting and corrosion.*
- *Corrosion of these components is not considered to be a defect in materials or workmanship.*

Harley-Davidson recommends the following products:

- WHEEL AND TIRE CLEANER (Part No. 94658-98): cleaner/degreaser for wheels, tires and engine.
- HARLEY GLOSS (Part No. 94627-98): all purpose surface protection the provides UV protection and a gloss finish.

See a Harley-Davidson dealer for cleaning, polishing and waxing products.

Windshields

CAUTION

Harley-Davidson windshields are made of Lexan. Lexan is a more durable and distortion-resistant material than other types of motorcycle windshield material, but still requires attention and care to maintain. Failure to maintain Lexan properly can result in damage to the windshield. (00230a)

CAUTION

Do not use harsh chemicals including rain sheeting products on Harley-Davidson windshields. They can cause dulling or hazing. If you want to use a windshield protectant on your windshield, try Harley Glaze Polish and Sealant (00231a)

CAUTION

Do not use benzine, paint thinner, gasoline or any other type of harsh cleaner on the windshield. Doing so will damage the windshield surface. (00232a)

NOTES:

- *To remove minor surface scratches use NOVUS No. 2 SCRATCH REMOVER (Part No. 99836-94T).*
- *Covering the windshield with a clean, wet cloth for approximately 15-20 minutes before washing will make dried bug removal easier.*

1. Use mild soap and warm water to wash the windshield.
2. Wipe dry with a soft, clean towel.

NOTE:

To treat your Lexan windshield with water repellent use WINDSHIELD WATER REPELLENT TREATMENT (Part No. 99841-02).

Troubleshooting

Troubleshooting: General

⚠WARNING

The troubleshooting section of the Owner's Manual is a guide to diagnose problems. Read the service manual before performing any work. Improper repair and/or maintenance could result in death or serious injury. (00080a)

The following checklist of possible operating troubles and their probable causes will be helpful in keeping your motorcycle in good operating condition. More than one of these conditions may be

causing trouble and should be carefully checked.

Engine

Starter Does Not Operate or Does Not Turn Engine Over

---

1. Engine run switch in OFF position.
2. Ignition switch not ON.
3. Discharged battery or loose or corroded connections (solenoid chatters).

Engine Turns Over But Does Not Start

---

1. Fuel tank empty.
2. Fuel valve turned OFF (If applicable).
3. Fuel vacuum line disconnected (If applicable).
4. Fuel valve or filter clogged (If applicable).
5. Discharged battery or loose or broken battery terminal connections.
6. Fouled spark plugs.
7. Spark plug cable connections loose or in bad condition and shorting.
8. Loose or corroded wire or cable connection(s) at coil or battery.
9. Engine flooded with fuel as a result of over-enrichening.
10. Throttle held open when enrichener is used (If applicable).
11. Fuel pump inoperative (If applicable).

Starts Hard

---

1. Spark plugs in bad condition, have improper gap, or are partially fouled.
2. Spark plug cables in bad condition and leaking.
3. Battery nearly discharged.
4. Loose wire or cable connection(s) at one of the battery terminals or at coil.
5. Carburetor not adjusted correctly (If applicable).
6. Engine oil too heavy (winter operation).
7. Fuel tank vent plugged or fuel line closed off, restricting fuel flow.
8. Water or dirt in fuel system.

9. Fuel pump inoperative (If applicable).

Starts But Runs Irregularly or Misses

1. Spark plugs in bad condition or partially fouled.
2. Spark plug cables in bad condition and leaking.
3. Spark plug gap too close or too wide.
4. Battery nearly discharged.
5. Damaged wire or loose connection at battery terminals or coils.
6. Intermittent short circuit due to damaged wire insulation.
7. Water or dirt in fuel system, filter or carburetor.
8. Fuel vent system plugged. See dealer.
9. One or more injectors fouled.

A Spark Plug Fouls Repeatly

1. Excessive enrichener use (If applicable).
2. Fuel mixture too rich (If applicable).
3. Incorrect spark plug.

Pre-ignition or Detonation (Knocks or Pings)

1. Incorrect fuel.
2. Incorrect spark plug for the kind of service.

Overheats

1. Insufficient oil supply or oil not circulating.
2. Heavy carbon deposit from lugging engine. See dealer.
3. Insufficient air flow over cylinder heads during extended periods of idling or parade duty.

Excessive Vibration

1. Rear fork pivot shaft nuts loose. See dealer.
2. Front engine mounting bolts loose. See dealer.

3. Engine to transmission mounting bolts loose. See dealer.
4. Broken frame. See dealer.
5. Front chain or links tight as a result of insufficient lubrication or belt badly worn.
6. Wheels and/or tires damaged. See dealer.
7. Vehicle not properly aligned. See dealer.

Electrical System

Alternator Does Not Charge

---

1. Module not grounded. See dealer.
2. Engine ground wire loose or broken. See dealer.
3. Loose or broken wires in charging circuit. See dealer.

Alternator Charge Rate is Below Normal

---

1. Weak battery.
2. Excessive use of add-on accessories.
3. Loose or corroded connections.
4. Extensive periods of idling or low speed riding.

Carburetor

Carburetor Floods

---

1. Excessive rolling of hand throttle grip.

Transmission

Transmission Shifts Hard

---

1. Bent shifter rod. See dealer.
2. Transmission shifting mechanism needs adjustment. See dealer.

Transmission Jumps Out of Gear

---

1. Shifter rod improperly adjusted. See dealer.

2. Shifter forks (inside transmission) improperly adjusted. See dealer.
3. Worn shifter dogs in transmission. See dealer.

Clutch Slips

---

1. Clutch controls improperly adjusted. See dealer.
2. Worn friction discs. See dealer.
3. Insufficient clutch spring tension. See dealer.

Clutch Drags or Does Not Release

---

1. Clutch controls improperly adjusted. See dealer.
2. Insufficient clutch spring tension. See dealer.
3. Primary chaincase overfilled.
4. Clutch discs warped. See dealer.

Clutch Chatters

---

1. Friction discs or steel discs worn or warped. See dealer.

Brakes

Brakes Do Not Hold Normally

---

1. Master cylinder low on fluid. See dealer.
2. Brake line contains air bubbles. See dealer.
3. Master or wheel cylinder piston worn. See dealer.
4. Brake pads contaminated with grease or oil. See dealer.
5. Brake pads badly worn. See dealer.
6. Brake disc badly worn or warped. See dealer.
7. Brake fades because of heat build up. Excessive braking or brake pads dragging. See dealer.
8. Brake drags. Insufficient hand lever free play. See dealer.

Warranties and Responsibilities

Warranty and Maintenance: Softail Models

This Owner's Manual contains your new motorcycle warranty.

It is the owner's responsibility to follow the scheduled mileage intervals as specified; all of the specified maintenance services must be performed to keep your warranty valid.

1. Make an appointment with a Harley-Davidson dealer for inspection and service just before you have ridden 1000 miles (1600 kilometers) or 500 miles (800 kilometers) for Springer models.
2. Bring this Owner's Manual with you when you visit your dealer to have your motorcycle inspected and serviced.
3. Have the dealer technician sign at the proper mileage interval. The records should be retained by the owner as proof of proper maintenance.
4. Keep receipts covering any parts, service or maintenance performed. These records should be transferred to each subsequent owner.

⚠WARNING

Do not use aftermarket parts and custom made front forks which can adversely affect performance and handling. Removing or altering factory installed parts can adversely affect performance and could result in death or serious injury. (00001a)

Harley-Davidson dealerships are independently owned and operated and may sell parts and accessories that are not manufactured or approved by Harley-Davidson. Therefore, you should understand that we are not and cannot be responsible for the quality, suitability, or safety of any non-Harley-Davidson part, accessory or design modification, including labor, which may be sold and/or installed by our dealers.

Keeping It All Harley-Davidson

1. Keep your Harley-Davidson completely Harley-Davidson.
2. Insist that your dealer uses only Genuine replacement parts to keep your Harley-Davidson motorcycle and its warranty intact.

Exacting design and stringent testing ensure performance and warranty coverage. Again, insist on Genuine parts for your genuine Harley-Davidson motorcycle.

NOTE:

Installing off-road or competition parts to enhance performance may void all or part of your new motorcycle warranty. See the Harley-Davidson Limited Warranty in this manual or a Harley-Davidson dealer for details.

CAUTION

It is possible to overload your motorcycle's charging

system by adding too many electrical accessories. If your combined electrical accessories operating at any one time consume more electrical current than your vehicle's charging system can produce, the electrical consumption can discharge the battery and cause vehicle electrical system damage. See a Harley-Davidson dealer for advice about the amount of current consumed by additional electrical accessories, or for necessary wiring changes. (00211b)

Important Moving Information

If you move from your present address, or sell your motorcycle, please fill out and mail the post card at the back of this manual. This is necessary in the event that the Company needs to contact the owner concerning information that could affect the safe operation of this motorcycle.

California Evaporative Emission Controls: 2005 Models

All new model year 2005 Harley-Davidson motorcycles sold in the State of California are equipped with an evaporative emission control system. This system is designed to meet the CARB regulations in effect at the time of manufacture.

The system requires a small amount of maintenance. Periodic inspection is required to make sure hoses are properly routed, not kinked or blocked and that all fittings are secure. Mounting hardware should also be checked periodically for tightness.

EPA Noise Regulations

EPA noise regulations require that the following statements be included in the Owner's Manual.

TAMPERING WITH NOISE CONTROL SYSTEM PROHIBITED: Federal law prohibits the following acts or the causing thereof: (1) The removal or rendering inoperative by any person other than for purposes of maintenance, repair, or replacement of any device or element of design incorporated into any new vehicle for the purpose of noise control prior to its sale or delivery to the ultimate purchaser or while it is in use, or (2) the use of the vehicle after such device or element of design has been removed or rendered inoperative by any person.

AMONG THOSE ACTS PRESUMED TO CONSTITUTE TAMPERING ARE THE ACTS LISTED BELOW.

1. Replacing the muffler(s) and/or the entire exhaust system with parts not certified to be noise legal for street use.
2. Removing or modifying the muffler internal baffles in any way.
3. Replacing the air intake/cleaner assembly with one not certified to be noise legal for street use.
4. Modifying the air intake/cleaner assembly in such a way as to make the vehicle no longer noise legal for street use.

Harley-Davidson recommends that any and all noise related maintenance be done by an authorized Harley-Davidson dealer using genuine Harley-Davidson parts.

Warranty/Service Information

Any authorized Harley-Davidson dealer is responsible for providing the warranty repair work on your motorcycle. If you have any questions regarding warranty obligations contact your selling dealer.

For normal service work or warranty work under the above conditions, you may obtain the name and location of your nearest U.S. Harley-Davidson dealer by calling 1-800-490-9635 (toll free), in any state except Alaska and Hawaii.

NOTE:

The number shown above is accessible only with a touch-tone phone.

Reporting Safety Defects

Safety defects must be reported to the National Highway Traffic Safety Administration (NHTSA) and Harley-Davidson.

NHTSA Statement

If you believe that your vehicle has a defect which could cause a crash or could cause injury or death, you should immediately inform the National Highway Traffic Safety Administration (NHTSA) in addition to notifying Harley-Davidson.

If NHTSA receives similar complaints, it may open an investigation, and if it finds that a safety defect exists in a group of vehicles, it may order a recall and remedy campaign. However, NHTSA cannot become involved in individual problems between you, your dealer, or Harley-Davidson.

To contact NHTSA, refer to NHTSA Contacts.

NHTSA Contacts

ITEM	DATA
Phone	Call the Auto Safety Hot Line toll-free at 1-888-DASH-2DOT
Mail	National Highway Traffic Safety Administration, Attn: Administrator, 400 Seventh Street S.W., Washington, D.C. 205090
Web site	www.nhtsa.dot.gov

You can also obtain other information about motor vehicle safety from the hot line.

Owner Transfer Identification Form

When purchasing a pre-owned Harley-Davidson or Buell, we encourage you to submit an Owner Transfer Notification Form. It is critical that new owner information is communicated to Harley-Davidson. New owner information is required to be on file with Harley-Davidson to transfer an

Extended Service Plan Contract. Harley-Davidson is also required by the National Traffic and Motor Vehicle Safety Act to notify all owners in the event of a recall. The form may be obtained at any Harley-Davidson dealer.

Required Documentation for Imported Motorcycles

If a Harley-Davidson is imported into the United States, additional documentation is required to be eligible for the United States Manufacturer's Limited Warranty. A Harley-Davidson dealer can provide a form explaining the requirements.

Limited Motorcycle Warranty

2005 HARLEY-DAVIDSON MOTORCYCLE LIMITED WARRANTY

---

24 Months/Unlimited Miles

Harley-Davidson warrants for any new 2005 Harley-Davidson motorcycle/sidecar that an authorized Harley-Davidson dealer will repair or replace without charge any parts found under normal use to be defective in factory materials or workmanship. Such repair and replacement will be Harley-Davidson's sole obligation and the customer's sole remedy under this warranty.

THERE IS NO OTHER EXPRESS WARRANTY (OTHER THAN THE SEPARATE EMISSIONS AND NOISE WARRANTIES) ON THE MOTORCYCLE. ANY IMPLIED WARRANTY OF MERCHANTABILITY OR FITNESS FOR PARTICULAR PURPOSE IS LIMITED TO THE DURATION OF THIS WARRANTY.

Some states do not allow limitations on how long an implied warranty lasts, so the above limitation may not apply to you.

The following terms and conditions apply to this warranty:

Duration

---

1. The duration of this limited warranty is twenty four months, measured from the date of initial retail purchase and delivery from an authorized Harley-Davidson dealer. Your dealer will submit an electronic Sales and Warranty Registration form to initiate your warranty.

2. Any unexpired portion of this limited warranty will be transferred to subsequent owners, upon the resale of the motorcycle/sidecar during the warranty period.

Owner's Obligations

To obtain warranty service, return your motorcycle/sidecar at your expense within the warranty period to an authorized dealer. Our dealer should be able to provide warranty service during normal business hours and as soon as possible, depending upon the workload of the dealer's service department and the availability of necessary parts.

Harley-Davidson Motor Company, P.O. Box 653, Milwaukee, Wisconsin 53201, U.S.A.

Exclusions

This warranty will not apply to any motorcycle/sidecar as follows:

1. Which has not been operated or maintained as specified in the Owner's Manual.
2. Which has been abused, misused, improperly stored, used "off the highway," or used for racing or competition of any kind.
3. Which is not manufactured to comply with the laws of the market in which it is registered.
4. Installing off-road or competition parts to enhance performance may void all or part of your new motorcycle warranty. See a Harley-Davidson dealer for details.

Other Limitations

This warranty does not cover:

1. Parts and labor for normal maintenance as recommended in the Owner's Manual, or the replacement of parts due to normal wear and tear including such items as the following: tires, lubrication, oil and filter change, fuel system cleaning, battery maintenance, engine tune-up, spark plugs, brake, clutch and chain/belt adjustment (including chain replacement).
2. Cosmetic concerns that arise as a result of owner abuse, lack of proper maintenance or environmental conditions (except concerns that result from defects in material or workmanship, which are covered by this warranty for the duration of the warranty period).
3. Any cosmetic condition existing at the time of retail delivery that has not been documented by the selling dealer prior to retail delivery.
4. Defects or damage to the motorcycle caused by alterations outside of Harley-Davidson factory specifications.

Important: Read Carefully

1. Our dealers are independently owned and operated and may sell other products. Because of this, HARLEY-DAVIDSON IS NOT RESPONSIBLE FOR THE SAFETY, QUALITY, OR SUITABILITY OF ANY NON-HARLEY-DAVIDSON PART, ACCESSORY OR DESIGN MODIFICATION INCLUDING LABOR WHICH MAY BE SOLD AND/OR INSTALLED BY OUR DEALERS.
2. TO THE FULLEST EXTENT ALLOWED BY LAW, HARLEY-DAVIDSON AND ITS DEALERS SHALL NOT BE LIABLE FOR LOSS OF USE, INCONVENIENCE, LOST TIME, COMMERCIAL LOSS OR OTHER INCIDENTAL OR CONSEQUENTIAL DAMAGES.
3. Some states do not allow the exclusion or limitation of incidental or consequential damages, so the above limitation or exclusion may not apply to you. This warranty gives you specific legal rights, and you may have other rights which vary from state to state.
4. This warranty is a contract between you and the manufacturer. It is separate and apart from any warranty you may receive or purchase from the dealer. The dealer is not authorized to alter, modify, or in any way change the terms and conditions of this warranty.

5. Any warranty work or parts replacement authorized by the manufacturer will not preclude the manufacturer from later relying on any exclusion where applicable.

Limited Noise Warranty

2005 Harley-Davidson Noise Control System Limited Warranty

The following warranty applies to the noise control system, is in addition to the MOTORCYCLE LIMITED WARRANTY and EMISSION CONTROL SYSTEM LIMITED WARRANTY, and applies only to motorcycles sold in the U.S.

Harley-Davidson Motor Company warrants that this vehicle is designed and built so as to conform at the time of sale with applicable regulations of the U.S. Environmental Protection Agency (as tested following F-76 Drive-By test procedure) and that it is free from defects in materials and workmanship which would cause this motorcycle not to meet U.S. Environmental Protection Agency Standards within 1 year or 3,730 miles (6,000 kilometers) whichever expires first. Any unexpired portion of this limited warranty will be transferred to subsequent owners, upon the resale of the motorcycle during the warranty period.

THERE IS NO OTHER EXPRESS WARRANTY (OTHER THAN THE SEPARATE MOTORCYCLE AND EMISSIONS WARRANTIES) ON THE MOTORCYCLE. ANY IMPLIED WARRANTY OF MERCHANTABILITY OR FITNESS FOR PARTICULAR PURPOSE IS LIMITED TO THE DURATION OF THIS WARRANTY.

Some states do not allow limitations on how long an implied warranty lasts, so the above limitation may not apply to you.

The warranty period shall begin on the date the motorcycle is delivered to the first retail purchaser or, if the motorcycle is placed in service as a demonstrator or company vehicle prior to sale at retail, on the date it is first placed in service.

THE FOLLOWING ITEMS ARE NOT COVERED BY THE NOISE CONTROL SYSTEM WARRANTY

1. Failures which arise as a result of misuse, alterations, or accident as specified in the Owner's Manual.

2. Replacing, removing, or modifying any portion of the NOISE CONTROL SYSTEM (consisting of the exhaust system and air intake/cleaner assembly) with parts not certified to be legal for street use.

3. Any motorcycle on which the odometer mileage has been changed so that the mileage cannot be determined.

4. TO THE FULLEST EXTENT ALLOWED BY LAW, HARLEY-DAVIDSON AND ITS DEALERS SHALL NOT BE LIABLE FOR LOSS OF USE, INCONVENIENCE, LOST TIME, COMMERCIAL LOSS OR OTHER INCIDENTAL OR CONSEQUENTIAL DAMAGES.

Some states do not allow the exclusion or limitation of incidental or consequential damages, so the above limitation or exclusion may not apply to you.

Other Rights

This warranty gives you specific legal rights, and you may have other rights which vary from state to state.

Recommendations for Required Maintenance

It is recommended that any noise system maintenance be performed by an authorized Harley-Davidson dealer using genuine Harley-Davidson replacement parts. The maintenance, replacement or repair of the noise control system may be performed by any other qualified service outlet or individual. Non-genuine parts may be used only if such parts are certified to comply with U.S. Environmental Protection Agency Standards.

Harley-Davidson Motor Company, P.O. Box 653, Milwaukee, Wisconsin 53201, U.S.A.

Limited Emission Warranty

2005 Harley-Davidson Emission Control System Limited Warranty

---

The following warranty applies to the emission control system, is in addition to the LIMITED MOTORCYCLE WARRANTY and NOISE CONTROL SYSTEM LIMITED WARRANTY, and applies only to motorcycles sold in the U.S.

Harley-Davidson Motor Company warrants that this vehicle is designed and built so as to conform at the time of sale with applicable regulations of the U.S. Federal Environmental Protection Agency, and that it is free from defects in materials and workmanship which would cause this motorcycle not to meet U.S. Environmental Protection Agency Standards within 5 years or 18,641 miles (30,000 kilometers) whichever expires first. Any unexpired portion of this limited warranty will be transferred to subsequent owners, upon the resale of the motorcycle during the warranty period.

THERE IS NO OTHER EXPRESS WARRANTY (OTHER THAN THE SEPARATE MOTORCYCLE AND NOISE WARRANTIES) ON THE MOTORCYCLE. ANY IMPLIED WARRANTY OF MERCHANTABILITY OR FITNESS FOR PARTICULAR PURPOSE IS LIMITED TO THE DURATION OF THIS WARRANTY.

Some states do not allow limitations on how long an implied warranty lasts, so the above limitation may not apply to you.

The warranty period shall begin on the date the motorcycle is delivered to the first retail purchaser or, if the motorcycle is placed in service as a demonstrator or company vehicle prior to sale at retail, on the date it is first placed in service.

THE FOLLOWING ITEMS ARE NOT COVERED BY THE EMISSION CONTROL SYSTEM WARRANTY

1. Failures which arise as a result of misuse, alterations, accident or non-performance of maintenance as specified in the Owner's Manual.

2. The replacement of parts (such as spark plugs, fuel and oil filters, etc.) used in required maintenance.

3. Any motorcycle on which the odometer mileage has been changed so that the mileage cannot be determined.

4. TO THE FULLEST EXTENT ALLOWED BY LAW, HARLEY-DAVIDSON AND ITS DEALERS SHALL NOT BE LIABLE FOR LOSS OF USE, INCONVENIENCE, LOST TIME, COMMERCIAL LOSS OR OTHER INCIDENTAL OR CONSEQUENTIAL DAMAGES.

Some states do not allow the exclusion or limitation of incidental or consequential damages, so the above limitation or exclusion may not apply to you.

Other Rights

This warranty gives you specific legal rights, and you may have other rights which vary from state to state.

Recommendations for Required Maintenance

It is recommended that any emission system maintenance be performed by an authorized Harley-Davidson dealer using genuine Harley-Davidson replacement parts. The maintenance, replacement or repair of the emissions control system may be performed by any other qualified service outlet or individual. Non-genuine parts may be used only if such parts are certified to comply with U.S. Environmental Protection Agency Standards.

Harley-Davidson Motor Company, P.O. Box 653, Milwaukee, Wisconsin 53201, U.S.A.

Maintenance Scheduling

Regular Service Intervals: Softail Models

Regular lubrication and maintenance will help keep your new Harley-Davidson operating at peak performance. Your Harley-Davidson dealer knows best how to service your motorcycle with factory approved methods and equipment assuring you of thorough and competent workmanship.

NOTES:

- *Refer to Regular Service Intervals: 2005 Softail Models. Regular maintenance interval operations are required to keep your new motorcycle warranty in force. The use of other than Harley-Davidson approved parts and service procedures may void the warranty. Any alterations to the emission system components, such as the carburetor and exhaust system, may be in violation of Federal and State laws.*
- *Refer to Owner's Maintenance Records: All Softail Models except Springers and Owner's Maintenance Records: All Softail Springers. When servicing your motorcycle, bring this owner's manual to the dealership and complete information needed in the blank columns listed.*

⚠WARNING

Perform the service and maintenance operations as indicated in the regular service interval table. Lack of regular maintenance at the recommended intervals can affect the safe operation of your motorcycle, which could result in death or serious injury. (00010a)

⚠WARNING

If you operate your motorcycle under adverse conditions (severe cold, extreme heat, very dusty environment, very bad roads, through standing water, etc.), you should perform the regular maintenance intervals more frequently to ensure the safe operation of your motorcycle. Failure to maintain your motorcycle could result in death or serious injury. (00094a)

Regular Service Intervals: 2005 Softail Models

ITEM SERVICED	PROCEDURE	1000 MI. 1600 KM	5000 MI. 8000 KM	10,000 MI. 16,000 KM	15,000 MI. 24,000 KM	20,000 MI. 32,000 KM	25,000 MI. 40,000 KM	NOTES
Engine oil and filter	Replace	X	X	X	X	X	X	
Oil lines and brake system	Inspect for leaks	X	X	X	X	X	X	1
Air cleaner	Inspect, service as required	X	X	X	X	X	X	
Tires	Check pressure, inspect tread	X	X	X	X	X	X	
Wheel spokes	Check tightness	X	X			X		1, 4
Primary chaincase lubricant	Replace	X	X	X	X	X	X	
Transmission lubricant	Replace	X	X	X	X	X	X	
Clutch	Check adjustment	X	X	X	X	X	X	1
Primary chain	Check adjustment	X	X	X	X	X	X	
Rear belt and sprockets	Inspect, adjust belt	X	X	X	X	X	X	1
Throttle, brake, enrichener and clutch controls	Check, adjust and lubricate	X	X	X	X	X	X	1, 4
Jiffy stand	Inspect and lubricate	X		X		X		1
Fuel valve, lines and fittings	Inspect for leaks	X	X	X	X	X	X	1, 4
Fuel tank filter screen	Clean (EFI: replace)						X	1
Brake fluid	Check levels and condition	X	X	X	X	X	X	
Brake pads and discs	Inspect for wear	X	X	X	X	X	X	
Spark plugs	Inspect	X	X		X		X	
	Replace			X		X		
Electrical equipment and switches	Check operation	X	X	X	X	X	X	
Engine idle speed	Check adjustment	X	X	X	X	X	X	1
Front fork oil	Replace					X		1
Steering head bearings	Adjust	X		X		X		1
(Softail Models)	Lubricate			X		X		2
Steering head bearings (Springer models)		Adjust and lubricate every 2500 miles (4000 kilometers).						1, 5

Rear fork bearings (if applicable)	Repack					X		1
Windshield bushings	Inspect			X		X		1
Springer rocker bearings	Adjust	X		X		X		1
Fuel door, Tour-Pak, saddlebags	Lubricate hinges and latches	X	X	X	X	X		
Critical fasteners	Check tightness	X		X		X		1
Battery	Check battery and clean connections							3
Road test	Verify component and system functions	X	X	X	X	X	X	
NOTES:	1. Should be performed by an authorized Harley-Davidson dealer, unless you have the proper tools, service data and are mechanically qualified. 2. Disassemble, lubricate and inspect every 30,000 miles (48,000 kilometers). 3. Perform annually. 4. Not all vehicles are equipped with an enrichener, fuel valve or spoke wheels. Consult appropriate topic in service manual. 5. Disassemble, lubricate and inspect every 20,000 miles (32,000 kilometers).							

Owner's Maintenance Records: All Softail Models except Springers

SERVICE MILE INTERVAL	DATE	DEALER NUMBER	TECHNICIAN NAME	TECHNICIAN SIGNATURE
1000 mi (1600 km)				
5000 mi (8000 km)				
10,000 mi (16,000 km)				
15,000 mi (24,000 km)				
20,000 mi (32,000 km)				
25,000 mi (40,000 km)				
30,000 mi (48,000 km)				
35,000 mi (56,000 km)				
40,000 mi (64,000 km)				
45,000 mi (72,000 km)				
50,000 mi (80,000 km)				

Owner's Maintenance Records: All Softail Springers

SERVICE MILE INTERVAL	DATE	DEALER NUMBER	TECHNICIAN NAME	TECHNICIAN SIGNATURE
500 mi (800 km)				
2500 mi (4000 km)				
5000 mi (8000 km)				
7500 mi (12,000 km)				
10,000 mi (16,000 km)				
12,500 mi (20,000 km)				
15,000 mi (24,000 km)				
17,500 mi (28,000 km)				
20,000 mi (32,000 km)				
22,500 mi (36,000 km)				
25,000 mi (40,000 km)				
27,500 mi (44,000 km)				
30,000 mi (48,000 km)				
32,500 mi (52,000 km)				
35,000 mi (56,000 km)				
37,500 mi (60,000 km)				
40,000 mi (64,000 km)				
42,500 mi (68,000 km)				
45,000 mi (72,000 km)				
47,500 mi (76,000 km)				
50,000 mi (80,000 km)				

Service Literature

Refer to Service Literature: 2005 Softail Models. Visit a Harley-Davidson dealer or www.harley-davidson.com to purchase a service or parts manual for your motorcycle. Factory authorized manuals are the most complete and detailed source of information outside of your Harley-Davidson dealer.

Service Literature: 2005 Softail Models

DOCUMENT	LANGUAGE	PART NUMBER
Service Manual	English	99482-05
Electrical Diagnostics Manual	English	99498-05
Service and Electrical Diagnostics Manual	French	99482-05F
Service and Electrical Diagnostics Manual	German	99482-05G
Service and Electrical Diagnostics Manual	Spanish	99482-05S
Service and Electrical Diagnostics Manual	Italian	99482-05I
Parts Catalog	English	99455-05