2008 Electra Glide Ultra Classic 105th Anniversary Edition (EFI) - Owner's Manual

Safety First

Safe Operating Rules: Touring Models

⚠WARNING

Motorcycles are different from other vehicles. They operate, steer, handle and brake differently. Unskilled or improper use could result in loss of control, death or serious injury. (00556c)

- **Take a rider training course.**
- **Read Owner's Manual before riding, adding accessories or servicing.**
- **Wear a helmet, eye protection and protective clothing.**
- **Never tow a trailer.**

Before operating your new motorcycle it is your responsibility to read and follow the operating and maintenance instructions in this manual, and follow these basic rules for your personal safety.

- Know and respect the rules of the road (see RULES OF THE ROAD section). Carefully read and observe the rules contained in the RIDING TIPS booklet accompanying this Owner's Manual. Read and familiarize yourself with the contents of the MOTORCYCLE HANDBOOK for your state.
- Before starting engine, check for proper operation of brake, clutch, shifter, throttle controls, correct fuel and oil supply.

⚠WARNING

Do not use aftermarket parts and custom made front forks which can adversely affect performance and handling. Removing or altering factory installed parts can adversely affect performance and could result in death or serious injury. (00001a)

- Use only Harley-Davidson approved parts and accessories. Use of certain other manufacturer's performance parts will void your new motorcycle warranty. See your Harley-Davidson dealer for details.

⚠WARNING

Stop the engine when refueling or servicing the fuel system. Do not smoke or allow open flame or sparks near gasoline. Gasoline is extremely flammable and highly explosive, which could result in death or serious injury. (00002a)

When refueling your motorcycle, the following rules should be observed.

- Refuel in a well ventilated area with the engine turned off.
- Remove fuel filler cap slowly.
- Do not smoke or allow open flames or sparks when refueling or servicing the fuel system.
- Do not fill fuel tank above the bottom of the filler neck insert.
- Leave air space to allow for fuel expansion.

⚠WARNING

Do not store motorcycle with gasoline in tank within the home or garage where open flames, pilot lights, sparks or electric motors are present. Gasoline is extremely flammable and highly explosive, which could result in death or serious injury. (00003a)

⚠WARNING

Engine exhaust from this product contains chemicals known to the State of California to cause cancer, and birth defects or other reproductive harm. (00004f)

⚠WARNING

Wheel weights on wheels without spokes contain lead and lead compounds, chemicals known to the State of California to cause cancer, and birth defects or other reproductive harm. (00356d)

⚠WARNING

Do not run motorcycle in a closed garage or confined area. Inhaling motorcycle exhaust, which contains poisonous carbon monoxide gas, could result in death or serious injury. (00005a)

⚠WARNING

The jiffy stand locks when placed in the full forward (down) position with vehicle weight on it. If the jiffy stand is not in the full forward (down) position with vehicle weight on it, the vehicle can fall over which could result in death or serious injury. (00006a)

⚠WARNING

Be sure jiffy stand is fully retracted before riding. If jiffy stand is not fully retracted, it can contact the road surface causing a loss of vehicle control, which could result in death or serious injury. (00007a)

- A new motorcycle must be operated according to the special break-in procedure. See

Break-in Riding Rules.

- Operate motorcycle only at moderate speed and out of traffic until you have become thoroughly familiar with its operation and handling characteristics under all conditions.

NOTE:

We recommend that you obtain information and formal training in the correct motorcycle riding technique. In the United States, the Motorcycle Safety Foundation® offers beginning and advanced rider safety courses. Call (949)727-3227 for information.

⚠WARNING

Travel at speeds appropriate for road and conditions and never travel faster than posted speed limit. Excessive speed can cause loss of vehicle control, which could result in death or serious injury. (00008a)

- Do not exceed the legal speed limit or drive too fast for existing conditions. Always reduce speed when poor driving conditions exist. High speed increases the influence of any other condition affecting stability and increases the possibility of loss of control.
- Pay strict attention to road surfaces and wind conditions. Any two wheeled vehicle may be subject to upsetting forces such as wind blasts from passing trucks, holes in the pavement, rough road surfaces, rider control error, etc. These forces may influence the handling characteristics of your motorcycle. If this happens, reduce speed and guide the motorcycle with a relaxed grip to a controlled condition. Do not brake abruptly or force the handlebar. This may aggravate an unstable condition.
- Keep cargo weight concentrated close to the motorcycle and as low as possible to minimize the change in the motorcycle's center of gravity. Distribute weight evenly on both sides of the vehicle and do not load bulky items too far behind the rider or add weight to the handlebars or front forks. Do not exceed maximum specified load in each saddlebag.

NOTE:

New riders should gain experience under various conditions while driving at moderate speeds.

- Operate your motorcycle defensively. Remember, a motorcycle does not afford the same protection as an automobile in an accident. One of the most common accident situations occurs when the driver of the other vehicle fails to see or recognize a motorcycle and turns left into the on-coming motorcyclist. Operate only with headlamp on.
- Wear an approved helmet, clothing, and foot gear suited for motorcycle riding. Bright or light colors are best for greater visibility in traffic, especially at night. Avoid loose, flowing garments and scarves.

⚠WARNING

Avoid contact with exhaust system and wear protective clothing that completely covers legs while riding. Exhaust pipes and mufflers get very hot when engine is running and remain too hot to touch, even after engine is turned off. Failure to wear protective clothing could result in burns or other serious injury. (00009a)

- When carrying passengers, it is your responsibility to instruct them on proper riding procedures. (See Riding Tips for Motorcyclist included in your Harley-Davidson Owner's Kit.)

- Do not allow other individuals, under any circumstances, to operate your motorcycle unless you know they are experienced, licensed riders and are thoroughly familiar with the operation of your particular motorcycle.

- Protect your motorcycle against theft. After parking your motorcycle, lock the steering head and remove ignition key from switch. Set security alarm if present.
- Safe motorcycle operation requires alert mental judgment combined with a defensive driving attitude. Do not allow fatigue, alcohol or drugs to endanger your safety or that of others.
- Vehicles equipped with a sound system should have the volume adjusted to a nondistracting level before operating vehicle.
- Maintain your motorcycle in proper operating condition in accordance with Regular Service Intervals: 2008 Touring Models. Particularly important to motorcycle stability is proper tire inflation pressure, tread condition, and proper adjustment of wheel bearings and steering head bearings.

⚠WARNING

Do not operate vehicle with forks locked. Locking the forks restricts the vehicle's turning ability, which could result in death or serious injury. (00035a)

⚠WARNING

Perform the service and maintenance operations as indicated in the regular service interval table. Lack of regular maintenance at the recommended intervals can affect the safe operation of your motorcycle, which could result in death or serious injury. (00010a)

⚠WARNING

Do not operate motorcycle with loose, worn or damaged steering or suspension systems. Contact a Harley-Davidson dealer for repairs. Loose, worn or damaged steering or suspension components can adversely affect stability and handling, which could result in death or serious injury. (00011a)

⚠WARNING

Regularly inspect shock absorbers and front forks. Replace leaking, damaged or worn parts that can adversely affect stability and handling, which could result in death or serious injury. (00012a)

⚠WARNING

Use Harley-Davidson replacement fasteners. Aftermarket fasteners can adversely affect performance, which could result in death or serious injury. (00013a)

- See your Harley-Davidson service manual for proper torque values.
- Aftermarket fasteners may not have the specific property requirements to perform properly.

⚠WARNING

Be sure tires are properly inflated, balanced and have adequate tread. Inspect your tires regularly and see a Harley-Davidson dealer for replacements. Riding with excessively worn, unbalanced or under-inflated tires can adversely affect stability and handling, which could result in death or serious injury. (00014a)

⚠WARNING

Replace punctured or damaged tires. In some cases, small punctures in the tread area may be repaired from within the demounted tire by a Harley-Davidson dealer. Speed should NOT exceed 50 mph (80 km/h) for the first 24 hours after repair, and the repaired tire should NEVER be used over 80 mph (130 km/h). Failure to follow this warning could result in death or serious injury. (00015a)

⚠WARNING

Do not exceed the motorcycle's Gross Vehicle Weight Rating (GVWR) or Gross Axle Weight Rating (GAWR). Exceeding these weight ratings can affect stability and handling, which could result in death or serious injury. (00016e)

- GVWR is the sum of the weight of the motorcycle, accessories, and the maximum weight of the rider, passenger and cargo that can be safely carried.
- GAWR is the maximum amount of weight that can be safely carried on each axle.
- The GVWR and GAWR are shown on the information plate located on the frame steering head.

⚠WARNING

Do not tow a disabled motorcycle. Towing can adversely affect stability and handling, which could result in death or serious injury. (00017a)

⚠WARNING

Do not pull a trailer with a motorcycle. Pulling a trailer can cause tire overload, reduced braking efficiency and adversely affect stability and handling, which could result in death or serious injury. (00018b)

⚠CAUTION

Direct contact of D.O.T. 4 brake fluid with eyes can cause irritation. Avoid eye contact. In case of eye contact flush with large amounts of water and get medical attention. Swallowing large amounts of D.O.T. 4 brake fluid can cause digestive discomfort. If swallowed, obtain medical attention. Use in well ventilated area. KEEP OUT OF REACH OF CHILDREN. (00240a)

⚠WARNING

Batteries, battery posts, terminals and related accessories contain lead and lead compounds, and other chemicals known to the State of California to cause cancer, and birth defects or other reproductive harm. Wash hands after handling. (00019e)

⚠WARNING

Consult a Harley-Davidson dealer regarding any questions or problems that occur in the operation of your motorcycle. Failure to do so can aggravate an initial problem, cause costly repairs, cause an accident and could result in death or serious injury. (00020a)

- Be sure all equipment required by federal, state and local law is installed and in good operating condition.

⚠WARNING

Do not open storage compartments while riding. Distractions while riding can lead to loss of control, which could result in death or serious injury. (00082a)

⚠WARNING

If ABS lamp remains on continuously, the ABS is not operating. The standard brake system is operational, but wheel lock up can occur. Contact a Harley-Davidson Dealer to have ABS repaired. A locked wheel will skid and can cause loss of vehicle control, which could result in death or serious injury. (00361a)

⚠WARNING

ABS cannot prevent lockup of rear wheel due to engine braking. ABS will not aid in cornering or on loose/uneven surfaces. A locked wheel will skid and can cause loss of vehicle control, which could result in death or serious injury. (00362a)

Rules of the Road

- Always sound your horn, actuate your turn signals, and exercise caution when passing other vehicles going in the same direction. Never try to pass another vehicle going in the same direction at street intersections, on curves, or when going up or down a hill.
- At street intersections give the right-of-way. Do not presume you have the right-of-way, as the other driver may not know it is your turn.
- Always signal when preparing to stop, turn or pass.
- All traffic signs, including those used for the control of traffic at intersections, should be obeyed promptly. SLOW DOWN signs near schools and CAUTION signs at railroad crossings should always be observed and your actions governed accordingly.
- When intending to turn, signal at least 100 feet 30.5 meters before reaching the turning point. If turning across an intersection, move over to the centerline of the street (unless local rules require otherwise). Slow down when entering the intersection and turn carefully.
- Never anticipate a traffic light. When a change is indicated from GO to STOP (or vice versa) in the traffic control systems at intersections, slow down and wait for the light to change. Never run through a yellow or red traffic light.
- While turning either right or left, watch for pedestrians, animals, as well as vehicles.
- Do not leave the curb or parking area without signaling. Be sure your way is clear to enter moving traffic. A moving line of traffic always has the right-of-way.
- Be sure your license plate is installed in the position specified by law and is clearly visible at all times. Keep the plate clean.
- Ride at a safe speed that is consistent with the type of highway you are on. Pay strict attention to whether the road is dry, oily, icy or wet.
- Watch for debris such as leaves or loose gravel.
- Weather and traffic conditions on the highway dictate adjusting your speed and driving habits accordingly.

Accessories and Cargo

Harley-Davidson Motor Company cannot test and make specific recommendations concerning every accessory or combination of accessories sold. Therefore, the rider must be responsible for safe operation of the motorcycle when installing accessories or carrying additional weight.

⚠WARNING

See the Accessory and Cargo section in your Owner's Manual. Improper loading of cargo or installation of accessories can affect motorcycle stability and handling, which could result in death or serious injury. (00021a)

⚠WARNING

Do not exceed the motorcycle's Gross Vehicle Weight Rating (GVWR) or Gross Axle Weight Rating (GAWR). Exceeding these weight ratings can affect stability and handling, which could result in death or serious injury. (00016e)

- GVWR is the sum of the weight of the motorcycle, accessories, and the maximum weight of the rider, passenger and cargo that can be safely carried.

- GAWR is the maximum amount of weight that can be safely carried on each axle.
- The GVWR and GAWR are shown on the information plate which is located on the frame down tube.

⚠WARNING

Do not pull a trailer with a motorcycle. Pulling a trailer can cause tire overload, reduced braking efficiency and adversely affect stability and handling, which could result in death or serious injury. (00018b)

Accessory and Cargo Guidelines

The following guidelines should be used when equipping a motorcycle, carrying passengers and/or cargo.

⚠WARNING

Travel at speeds appropriate for road and conditions and never travel faster than posted speed limit. Excessive speed can cause loss of vehicle control, which could result in death or serious injury. (00008a)

- Do not exceed the legal speed limit or drive too fast for existing conditions. Always reduce speed when poor driving conditions exist. High speed increases the influence of any other condition affecting stability and increases the possibility of loss of control.
- Pay strict attention to road surfaces and wind conditions. Any two wheeled vehicle may be subject to upsetting forces such as wind blasts from passing trucks, holes in the pavement, rough road surfaces, rider control error, etc. These forces may influence the handling characteristics of your motorcycle. If this happens, reduce speed and guide the motorcycle with a relaxed grip to a controlled condition. Do not brake abruptly or force the handlebar. This may aggravate an unstable condition.
- Keep cargo weight concentrated close to the motorcycle and as low as possible. This minimizes the change in the motorcycle's center of gravity.
- Distribute weight evenly on both sides of the vehicle.
- Do not load bulky items too far behind the rider or add weight to the handlebars or front forks.
- Do not exceed maximum specified load in each saddlebag.
- Luggage racks are designed for lightweight items. Do not overload racks.
- Be sure cargo is secure and will not shift while riding and recheck the cargo periodically. Accessories that change the operator's riding position may increase reaction time and affect handling of the motorcycle.
- Additional electrical equipment may overload the motorcycle's electrical system possibly resulting in electrical system and/or component failure.

⚠WARNING

The front and/or rear guard(s) can provide limited leg and cosmetic vehicle protection under unique circumstances. (Fall over while stopped, very slow speed slide.) It is not

made or intended to provide protection from bodily injury in a collision with another vehicle or any other object. (00022a)

Large surfaces such as fairings, windshields, back rests, and luggage racks can adversely affect handling. Only genuine Harley-Davidson items designed specifically for the motorcycle model should be used with proper installation.

⚠WARNING

Do not use aftermarket parts and custom made front forks which can adversely affect performance and handling. Removing or altering factory installed parts can adversely affect performance and could result in death or serious injury. (00001a)

⚠WARNING

Only Touring Harley-Davidson Motorcycles are suitable for sidecar use. Consult a Harley-Davidson dealer. Use of motorcycles other than Touring models with sidecars could result in death or serious injury. (00040a)

Noise Control System

Tampering

Owners are warned that removal or replacement of any noise control system component may be prohibited by law. This prohibition applies prior to vehicle sale or delivery to the ultimate purchaser. Use of a vehicle on which noise control system components have been removed or rendered inoperative may also be prohibited by law.

Identification

Vehicle Identification Number: Touring Models

The full 17-digit serial or Vehicle Identification Number (V.I.N.) is stamped on the right side of the frame backbone at the rear of the frame behind the steering head. A label bearing the V.I.N. code is also affixed to the left side of the frame behind the steering head.

An abbreviated V.I.N. is stamped on the left side crankcase at the base of the rear cylinder.

NOTE:

Always give the full 17-digit Vehicle Identification Number when ordering parts or making any inquiry about your motorcycle.

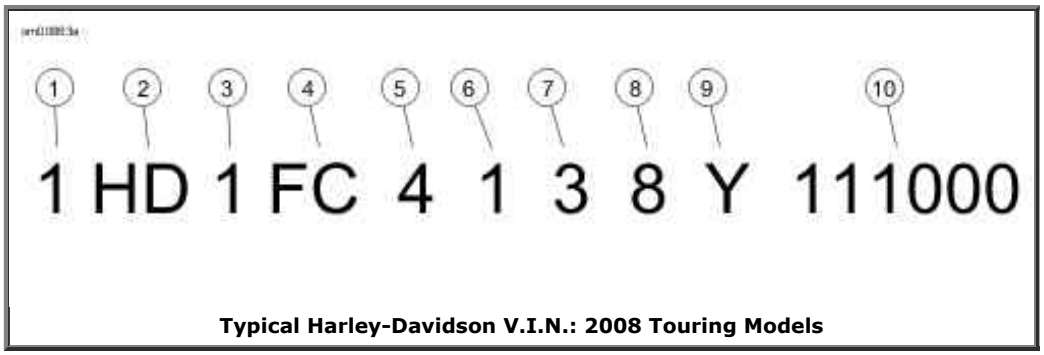

Typical Harley-Davidson V.I.N.: 2008 Touring Models

Harley-Davidson V.I.N. Breakdown: 2008 Touring Models

POSITION	DESCRIPTION	POSSIBLE VALUES
1	Market designation	1=Originally manufactured for sale **within** the United States 5=Originally manufactured for sale **outside** of the United States
2	Manufacturer	HD=Harley-Davidson
3	Motorcycle type	1=Heavyweight motorcycle (901 cc or larger)
4	Model	See V.I.N. model table
5	Engine type	4=Twin Cam 96™, 1584 cc air cooled, fuel injected
6	Introduction date	1=Regular 2=Mid-year 3=California/regular 4=Cosmetic changes and/or special introductory date 5=California/cosmetic changes and/or special introductory date 6=California/mid-year
7	V.I.N. check digit	Can be 0-9 or X
8	Model year	8=2008
9	Assembly plant	Y=York, PA U.S.A.
10	Sequential number	Varies

V.I.N. Model Codes: 2008 Touring Models

CODE	MODEL	CODE	MODEL
FB	FLHR Road King®	FC	FLHTCU Ultra Classic® Electra Glide®
FG	FLHTCU Ultra Classic® Electra Glide® with sidecar	FL	FLHTCU Ultra Classic® Electra Glide® Shrine
FS	FLTR Road Glide®	FV	FLHT Electra Glide® Standard
FF	FLHTC Electra Glide® Classic	KB	FLHX Street Glide™
FW	FLHR Road King® Shrine	FR	FLHRC Road King® Classic

Labels

See Labels: Touring Models for safety and maintenance labels which were on the vehicle when new. If removed, replacement labels may be purchased for your motorcycle. Refer to Labels: Touring Models for label descriptions.

Labels: Touring Models

ITEM	PART NO.	DESCRIPTION	LOCATION
1	29127-95B	General warnings	Top of air cleaner cover
2	15368-01A	Battery warning	Under seat, right side of frame
3	14148-86	Highway bar warning	On front of highway bar below center mount
4	90820-93C	Saddlebag load limits	Inside saddlebag.
5	90821-74B	Tour-Pak load limits	Inside Tour-Pak lid.
6	72537-08	Fuse block cover	Under left side cover on fuse block

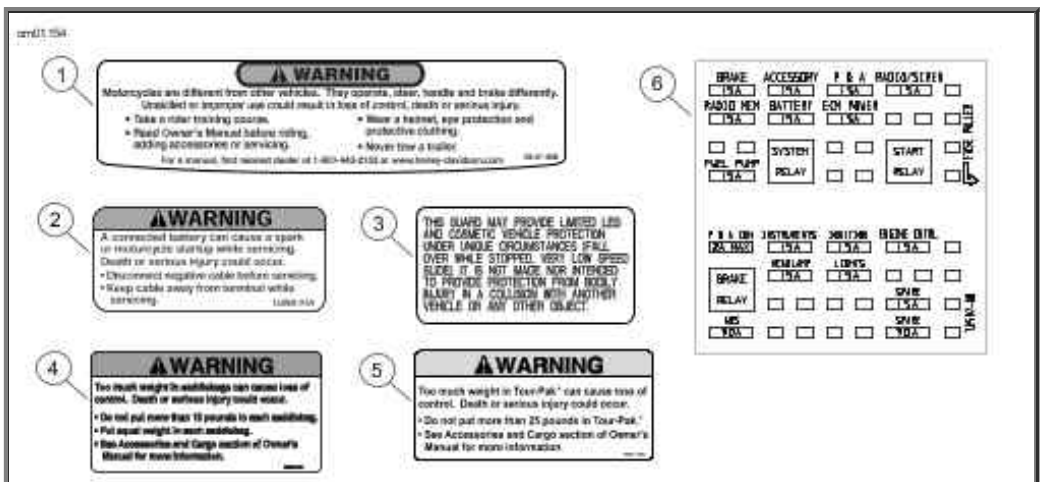

Labels: Touring Models

Specifications

Specifications: 2008 Touring Models

Engine: 2008 Touring Models

ITEM	SPECIFICATION	
Number of cylinders	2	
Type	4-cycle, 45 degree V-Type, air cooled	
Compression ratio	9.2-1	
Bore	3.750 in.	95.25 mm

Bore	[illegible] in.	[illegible] mm
Stroke	4.380 in.	111.25 mm
Displacement	96 cu. in.	1584 cc
Torque (North America)	92.60 ft-lbs @ 3500 RPM	125.57 Nm @ 3500 RPM
Torque (International)	90.20 ft-lbs @ 3400 RPM	122.31 Nm @ 3400 RPM
Torque (Japan)	86.90 ft-lbs @ 2500 RPM	117.84 Nm @ 2500 RPM

Transmission: 2008 Touring Models

TRANSMISSION	SPECIFICATION
Type	Constant mesh, foot shift
Speeds	6 forward

Ignition System: 2008 Touring Models

COMPONENT	SPECIFICATION	
Ignition timing	Not adjustable	
Battery	12 volt, 28 amp/hr, 270 CCA sealed and maintenance free	
Spark plug type	HD-6R12	
Spark plug size	12 mm	
Spark plug gap	0.038-0.043 in.	0.97-1.09 mm
Spark plug torque	12-18 ft-lbs	16.3-24.4 Nm

NOTE:

Specifications in this publication may not match those of official certification in some markets due to timing of publication printing, variance in testing methods, and/or vehicle differences. Customers seeking officially recognized regulatory specifications for their vehicle should refer to certification documents and/or contact their respective dealer or distributor.

Sprocket Teeth: 2008 Touring Models

DRIVE	ITEM	NUMBER OF TEETH
Primary	Engine	34
	Clutch	46
Final	Transmission	32
	Rear wheel	66

Capacities: 2008 Touring Models

ITEM	U.S.	LITERS
Fuel tank (total)	6.0 gal	22.7
Oil tank with filter	4.0 U.S. qt.	3.8
Transmission (approximate)	32.0 fl. oz.	0.95
Primary chaincase (approximate)	45.0 fl. oz.	1.32

Gear Ratios: 2008 Touring Models

GEAR	RATIO
1st Gear	9.312
2nd Gear	6.421
3rd Gear	4.774
4th Gear	3.926
5th Gear	3.279
6th Gear	2.790

NOTE:

Gross Vehicle Weight Rating (GVWR) (maximum allowable loaded vehicle weight) and corresponding Gross Axle Weight Ratings (GAWR) are listed on a label located on the left side of the motorcycle on the lower front downtube.

Weights: 2008 FLHT, FLHTC/U, FLTR and FLHX

ITEM	FLHT		FLHTC		FLHTCU		FLTR		FLHX	
	LB.	KG	LB.	KG	LB.	KG	LB.	KG	LB.	KG
Weight as shipped from factory	743	337	791	359	814	369	752	341	749	341
GVWR	1259	571	1259	571	1259	571	1259	571	1259	571
GAWR front	500	227	500	227	500	227	500	227	500	227
GAWR rear	827	375	827	375	827	375	827	375	827	375

Weights: 2008 FLHR and FLHRC

ITEM	FLHR		FLHRC	
	LB.	KG	LB.	KG
Weight as shipped from factory	740	336	738	335
GVWR	1259	571	1259	571
GAWR front	500	227	500	227

GAWR rear	827	375	827	375

Dimensions: 2008 FLHT, FLHTC/U, FLTR and FLHX

ITEM	FLHT		FLHTC		FLHTCU		FLTR		FLHX	
	IN.	MM	IN.	MM	IN.	MM	IN.	MM	IN.	MM
Wheel base	63.5	1612.9	63.5	1612.9	63.5	1612.9	63.5	1612.9	63.5	1612.9
Overall length (Tour-Pak in rearmost position)	93.7	2380.0	97.5	2476.5	98.3	2496.8	93.7	2380.0	94.5	2400.3
Overall width	39.0	990.6	39.0	990.6	39.0	990.6	35.8	909.3	39.0	990.6
Road clearance	5.1	129.5	5.1	129.5	5.1	129.5	5.1	129.5	4.7	119.4
Overall height	61.0	1549.4	61.0	1549.4	61.0	1549.4	55.0	1397.0	52.2	1325.9
Saddle height*	27.3	693.4	27.3	693.4	27.3	693.4	26.9	683.3	26.3	668.0
*With 180 lb. (81.7 kg) rider on seat										

Dimensions: 2008 FLHR and FLHRC

ITEM	FLHR		FLHRC	
	IN.	MM	IN.	MM
Wheel base	63.5	1612.9	63.5	1612.9
Overall length	93.7	2380.0	93.7	2380.0
Overall width	34.5	876.3	34.5	876.3
Road clearance	5.1	129.5	5.1	129.5
Overall height	55.1	1399.5	55.1	1399.5
Saddle height*	27.3	693.4	26.9	683.3
*With 180 lb. (81.7 kg) rider on seat				

Tire Pressures: 2008 Touring Models

MODEL	LOAD	TIRE PRESSURE (COLD)			
		FRONT		REAR	
		PSI	kPa	PSI	kPa
All	Solo rider	36	248	36	248
	Rider and passenger	36	248	40	276

Tire Sizes: 2008 Touring Models

MODEL	MOUNT	SIZE	NUMBER
All	front	16 in.	D402F MT90B16
All	rear	16 in.	D402 MU85B16
2008 vehicles use Dunlop Harley-Davidson tires only			

2008 vehicles use Dunlop Harley-Davidson tires only.

Bulb Chart: 2008 Touring Models

LAMP	DESCRIPTION (ALL LAMPS 12 VOLT)	BULBS REQUIRED	CURRENT DRAW AMPERAGE	HARLEY-DAVIDSON PART NUMBER
Headlamp	FLHT/C/U, FLHR, FLHX	1	4.58/5.0	68329-03
	FLTR	2	4.58/5.0	68329-03
	Position lamp international	1	0.32	53438-92
Tail and stop lamp	Tail lamp	1	0.59	68167-04
	Stop lamp	1	2.10	68167-04
	Tail lamp international	1	0.59	68167-04
	Stop lamp international	1	2.10	68167-04
Turn signal lamp	Front/running	2	2.25/0.59	68168-89A
	Front international	2	1.75	68163-84
	Rear	2	2.25	68572-64B
	Rear international	2	1.75	68163-84
Additional lighting	Tour-Pak side lamps FLHTCU*	N/A	0.14 0.14	53788-06 (right side) 53789-06 (left side)
	Fender tip lamps	2	0.30	53439-79
	License plate lamp international	1	0.37	53436-97
	License plate lamp FLHX domestic	2	0.35	52441-95
	Auxiliary lamps	2	2.1	68453-05
	Auxiliary lamps international	2	2.7	68851-98
Instrument panel lamps FLHT/C/U FLHR/C FLTR FLHX	High beam indicator	Instrument panel is illuminated with LEDs. Replace entire assembly upon failure.		
	Oil pressure indicator			
	Neutral indicator			
	Turn signal indicator			
Gauge lamps FLHR/C	speedometer	N/A	N/A	N/A
	Odometer	N/A	N/A	N/A
	Fuel gauge	1	0.19	67136-85
	Engine	N/A	N/A	N/A
Gauge lamps	speedometer	N/A	N/A	N/A

Gauge lamps FLHT/C/U FLTR FLHX	speedometer	N/A	N/A	N/A
	Tachometer	N/A	N/A	N/A
	Voltmeter	1	0.24	67445-00
	Oil pressure indicator FLHT/C/U	1	0.24	67445-00
	Air temperature gauge FLHT/C/U	1	0.24	67445-00
	Fuel gauge	1	0.24	67445-00
Items with *	Illuminated with LEDs. Replace entire assembly upon failure.			

Tire Data

⚠WARNING

Match tires, tubes, air valves and caps to the correct wheel rim. Contact a Harley-Davidson dealer. Mismatching can result in damage to the tire bead, allow tire slippage on the rim or cause tire failure, which could result in death or serious injury. (00023a)

⚠WARNING

Use only Harley-Davidson approved tires. See a Harley-Davidson dealer. Using non-approved tires can adversely affect stability, which could result in death or serious injury. (00024a)

Tubeless tires fitted with the correct size inner tubes may be used on all Harley-Davidson laced (wire spoked) wheels. Protective rubber rim strips must be used with tubeless tires (fitted with correct size inner tubes) when mounted on laced (wire spoked) wheels.

⚠WARNING

Use inner tubes on laced (wire spoked) wheels. Using tubeless tires on laced wheels can cause air leaks, which could result in death or serious injury. (00025a)

Tubeless tires are used on all Harley-Davidson cast and disc wheels.

Tire sizes are molded on the tire sidewall. Inner tube sizes are printed on the tube.

⚠WARNING

Harley-Davidson front and rear tires are not the same. Interchanging front and rear tires can cause tire failure,

which could result in death or serious injury. (00026a)

⚠WARNING

Do not inflate tire beyond maximum pressure as specified on sidewall. Over inflated tires can blow out, which could result in death or serious injury. (00027a)

⚠WARNING

Harley-Davidson tires are equipped with wear bars that run horizontally across the tread. When wear bars become visible and only 1/32 in. (0.8 mm) tread depth remains, replace tire immediately. Using a worn tire can adversely affect stability and handling, which could result in death or serious injury. Use only Harley-Davidson approved replacement tires. (00090b)

See Specifications: 2008 Touring Models for tire pressures and sizes.

Gasoline Blends

Your motorcycle was designed to get the best performance and efficiency using unleaded gasoline. Most gasoline is blended with alcohol and/or ether to create oxygenated blends. The type and amount of alcohol or ether added to the fuel is important.

CAUTION

Do not use gasoline that contains methanol. Doing so can result in fuel system component failure, engine damage and/or equipment malfunction. (00148a)

- Gasoline containing METHYL TERTIARY BUTYL ETHER (MTBE): Gasoline/MTBE blends are a mixture of gasoline and as much as 15% MTBE. Gasoline/MTBE blends can be used in your motorcycle.
- ETHANOL is a mixture of 10% ethanol (Grain alcohol) and 90% unleaded gasoline. Gasoline/ethanol blends can be used in your motorcycle if the ethanol content does **not** exceed 10%.
- REFORMULATED OR OXYGENATED GASOLINES (RFG): Reformulated gasoline is a term used to describe gasoline blends that are specifically designed to burn cleaner than other types of gasoline, leaving fewer tailpipe emissions. They are also formulated to evaporate less when you are filling your tank. Reformulated gasolines use additives to oxygenate the gas. Your motorcycle will run normally using this type of gas and Harley-Davidson recommends you use it when possible, as an aid to cleaner air in our environment.

Some gasoline blends might adversely affect the starting, driveability or fuel efficiency of the motorcycle. If any of these problems are experienced, try a different brand of gasoline or gasoline with a higher octane blend.

Fuel

Refer to Octane Ratings. Always use a good quality unleaded gasoline. Octane ratings are usually found on the pump.

⚠WARNING

Avoid spills. Slowly remove filler cap. Do not fill above bottom of filler neck insert, leaving air space for fuel expansion. Secure filler cap after refueling. Gasoline is extremely flammable and highly explosive, which could result in death or serious injury. (00028a)

⚠WARNING

Use care when refueling. Pressurized air in fuel tank can force gasoline to escape through filler tube. Gasoline is extremely flammable and highly explosive, which could result in death or serious injury. (00029a)

Modern service station pumps dispense a high flow of gasoline into a motorcycle fuel tank making air entrapment and pressurization a possibility.

Octane Ratings

SPECIFICATION	RATING
Pump Octane (R+M)/2	91 (95 RON)

Catalytic Converters

Some Touring motorcycles are equipped with catalytic converters.

CAUTION

Do not operate catalytic converter-equipped vehicle with engine misfire or a non-firing cylinder. If you operate the vehicle under these conditions, the exhaust will become abnormally hot, which can cause vehicle damage, including emission control loss. (00149a)

CAUTION

Use only unleaded fuel in catalytic converter-equipped motorcycles. Using leaded fuel will damage the emission control system. (00150b)

Controls and Indicators

General: Controls and Indicators

⚠WARNING

Read the CONTROLS AND INDICATORS section before riding your motorcycle. Failure to understand the operation of the motorcycle could result in death or serious injury. (00043a)

Some features explained are unique to certain models. These features may be available as accessories for your Harley-Davidson motorcycle. See a Harley-Davidson dealer for a complete list of accessories that will fit your specific motorcycle.

Ignition/Headlamp Key Switch: Touring Models

⚠WARNING

The automatic-on headlamp feature provides increased visibility of the rider to other motorists. Be sure headlamp is on at all times. Poor visibility of rider to other motorists can result in death or serious injury. (00030b)

See YOUR OWNER'S MANUAL section. Be sure to record all your key numbers in the space provided at the front of this book.

See Ignition/Headlamp Key Switch: Touring Models. The ignition/headlamp key switch controls electrical functions of the motorcycle.

CAUTION

Protect your vehicle against theft. After parking your motorcycle, lock the steering head and remove ignition key from switch. Failure to lock your motorcycle may result in theft and/or equipment damage. (00151a)

⚠WARNING

Do not operate vehicle with forks locked. Locking the forks restricts the vehicle's turning ability, which could result in death or serious injury. (00035a)

CAUTION

Do not lubricate barrel locks with petroleum based lubricants or graphite. Inoperative locks may result. (00152a)

NOTES:

- *Harley-Davidson recommends removing key from ignition/fork lock before operating*

motorcycle. If you do not remove key, it can fall out during operation.

- *ACCESS/ACCESSORY - Accessories and hazard warning flasher can be turned on. Instrument lamps are on. Brake lamp and horn can be activated. Key may be removed.*
- *The lamps illuminate when the switch is in the IGNITION position, as required by law in some localities.*

Ignition/Headlamp Switch Positions: 2008 Touring Models

MODEL	FUNCTION	LABEL	OPERATION
FLHT FLHTC FLHTCU FLTR FLHX	Key Lock	LOCK	Locks the switch in either the FORK LOCK or ACCESS switch position. Remove the key for security.
		UNLOCK	Unlocks the switch. Unlocked, the switch can be rotated to any of the 4 positions. To prevent loss when riding, remove the key.
	Switch	FORK LOCK	Locks fork in left position to discourage unauthorized use of vehicle when parked. See Fork Lock: Touring Models for operation.
		OFF	When switch is in OFF position, the ignition, lamps and accessories are off.
		IGNITION	When the switch is in the IGNITION position, the motorcycle can be started and all lamps and accessories will operate.
		ACCESS	When the switch is in the ACCESS position, all the lamps and accessories will operate but the engine can not be started. In ACCESS, the switch can be locked.
FLHR FLHRC	Switch	Switch is locked or unlocked by lifting switch cover, inserting key and turning key counterclockwise to lock, clockwise to unlock. Key may be removed in any position.	
		OFF	Ignition, lamps and accessories are off.
		ACCESSORY	Accessories are on. Hazard warning flashers can be left on. Instrument lamps are on. Brake lamp and horn can be activated.*
		IGNITION	Ignition, lamps and accessories are on.*
* International models have an additional function. Position lamp and tail lamp are also on.			

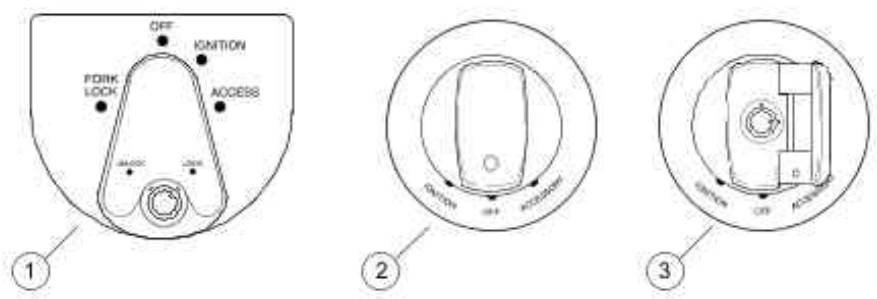

1. All except FLHR models
2. All FLHR models (cover shown closed)
3. All FLHR models (cover shown open)

Ignition/Headlamp Key Switch: Touring Models

Fork Lock: Touring Models

CAUTION

Protect your vehicle against theft. After parking your motorcycle, lock the steering head and remove ignition key from switch. Failure to lock your motorcycle may result in theft and/or equipment damage. (00151a)

Using the fork lock immediately after parking your motorcycle will discourage unauthorized use or theft when parking your motorcycle.

See Fork Lock: FLHR/FLHRC. On FLHR/FLHRC models, the fork lock is located at the top of the steering head, behind the headlamp nacelle and inset in the handlebar clamp shroud.

See Ignition/Headlamp Key Switch: Touring Models. On FLHT/FLTR/FLHX models, the fork lock is integrated into the ignition switch.

NOTE:

Do not force the switch into the locked position or switch damage can occur.

⚠WARNING

Do not operate vehicle with forks locked. Locking the forks restricts the vehicle's turning ability, which could result in death or serious injury. (00035a)

To Lock Fork on FLHR/FLHRC Models

1. Turn fork to full left position.
2. See Fork Lock: FLHR/FLHRC. Insert key and turn key counterclockwise to LOCK position. Remove key.

3. To unlock fork, insert key and turn clockwise to UNLOCK position. Remove key.

To Lock Fork on FLHT/FLTR/FLHX Models

1. Turn fork to full left position.
2. See Ignition/Headlamp Key Switch: Touring Models. Turn switch knob to FORK LOCK and push knob down.
3. Insert key and turn key to LOCK position. Remove key.
4. To unlock fork, insert key and turn to UNLOCK position. Remove key and rotate switch knob out from the FORK LOCK position.

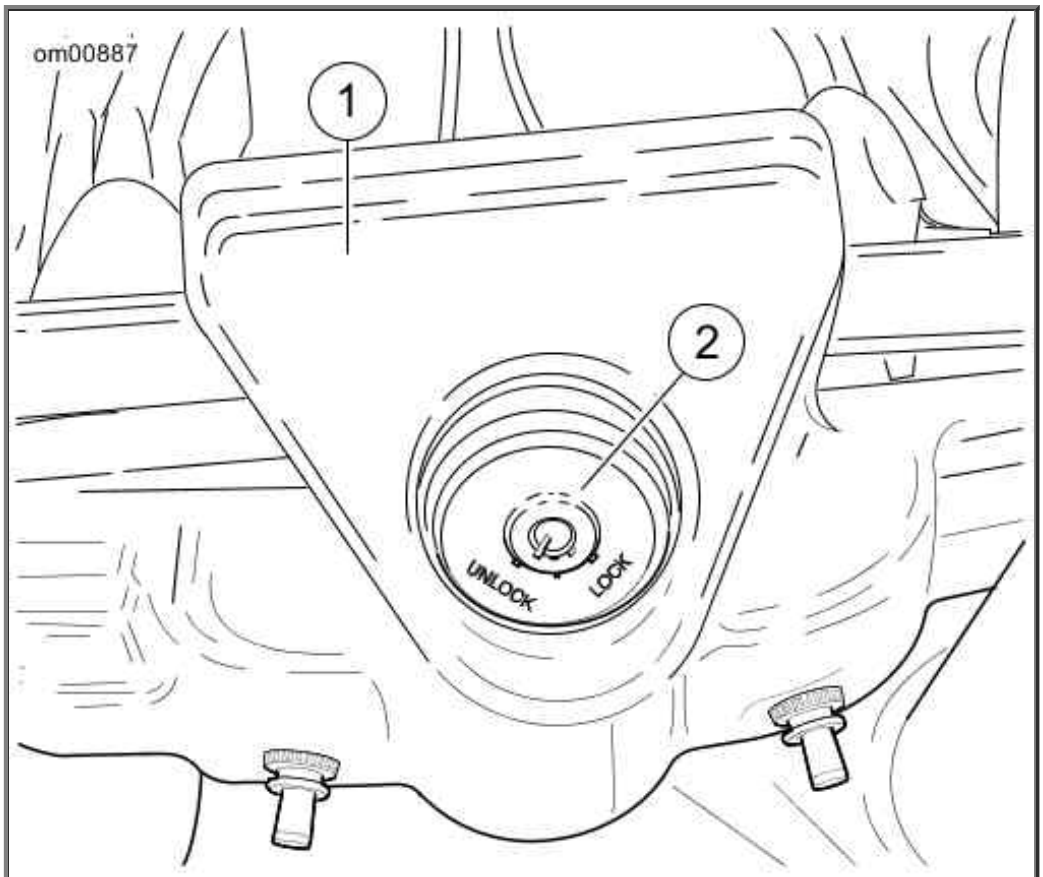

1. Clamp shroud
2. Fork lock

Fork Lock: FLHR/FLHRC

Hand Controls: Basic Operation

Electric Starter Switch

NOTE:

Off/Run switch MUST be in RUN position to operate engine.

See Basic Handlebar Controls: FLHRC Shown (typical). The electric starter switch is located on the right handlebar control group. See Starting the Engine for detailed operation procedures.

1. Put the engine off/run switch in the RUN position and the transmission in neutral. Neutral (green) indicator lamp should be illuminated.

2. See Ignition/Headlamp Key Switch: Touring Models. Turn ignition/headlamp key switch to IGNITION and push the START switch to operate starter motor.

Engine OFF/RUN Switch

See Basic Handlebar Controls: FLHRC Shown (typical). The engine off/run switch (7) turns the ignition power ON or OFF. The engine off/run switch is located on the right handlebar control. Push the top portion of the engine off/run switch to turn off ignition power and shut the engine off. Push the bottom portion of the engine off/run switch to turn on ignition power.

NOTES:

- *The engine off/run switch must be in the RUN position to start or operate the engine.*
- *The engine off/run switch should be used to shut the engine off.*

1. To shut the engine off, push the top of the off/run switch to the ignition OFF position.

2. See Ignition/Headlamp Key Switch: Touring Models. Turn the ignition key to the OFF position to turn the ignition power completely OFF.

Throttle Control Grip

See Basic Handlebar Controls: FLHRC Shown (typical). The throttle control grip (9) is located on the right handlebar control and is operated with the right hand.

To reduce rider fatigue on long trips, a spring loaded throttle friction adjustment screw (10) is located at the bottom of the throttle grip clamp on non-cruise equipped models.

1. Slowly turn throttle control grip clockwise (toward the front of the bike) to close the throttle (decelerate).

2. Slowly turn throttle control grip counterclockwise (toward rear of bike) to open the throttle (accelerate).

⚠WARNING

Do not tighten throttle friction adjustment screw to the point where the engine will not return to idle automatically. Over-tightening can lead to loss of vehicle control, which could result in death or serious injury. (00031b)

3. Unscrew the throttle friction adjustment screw so the throttle returns to the idle position when the hand is removed from the grip.

4. Screw the throttle adjustment screw in to increase friction on grip. This provides a damping effect on throttle motion.

NOTE:

The throttle friction adjustment screw should not be used under normal stop and go operating

conditions.

Clutch Hand Lever

⚠WARNING

Do not position fingers between hand control lever and handlebar grip. Improper hand positioning can impair control lever operation and cause loss of vehicle control, which could result in death or serious injury. (00032a)

See Basic Handlebar Controls: FLHRC Shown (typical). The clutch hand lever (1) is located on the left handlebar and is operated with the fingers of the left hand.

1. Slowly pull clutch hand lever in against handlebar grip to fully disengage clutch.
2. Shift to first gear using the gear shifter lever. See Cruise Control: Touring Models.
3. Slowly release the clutch hand lever to engage clutch.

A clutch switch is incorporated into the left handlebar switch assembly. It enables the rider to start the vehicle in any gear (or in neutral) as long as the clutch lever is pulled in. If the clutch is not disengaged, the vehicle will not start.

Horn Switch

See Basic Handlebar Controls: FLHRC Shown (typical). The horn is operated by pushing on the horn switch (2) located on the left handlebar control group.

Headlamp Dimmer Switch

See Basic Handlebar Controls: FLHRC Shown (typical). The headlamp dimmer switch (3) is located on the left handlebar. The switch has two positions to activate the headlamps high or low beams.

- Press the top of the headlamp dimmer beam switch to activate the high beam.
- Press the bottom of the headlamp dimmer switch to return to the low beam.

See Indicator Lamps. The (blue) high beam indicator lamp will illuminate when the high beam is on.

Turn Signal Switches

See Basic Handlebar Controls: FLHRC Shown (typical). Each handlebar control group contains a turn signal switch.

- The right turn signal switch (11) operates the right front and right rear flashing lamps.
- The left turn signal switch (4) operates the left front and left rear flashing lamps.

NOTE:

Front turn signal lamps also function as running lamps (except International models).

Cruise Control Switches

Electronic cruise control is standard for FLHRC, FLTR, and FLHTCU models. For all other models, cruise control is available as a factory-installed option.

See Cruise Control: Touring Models for detailed operation.

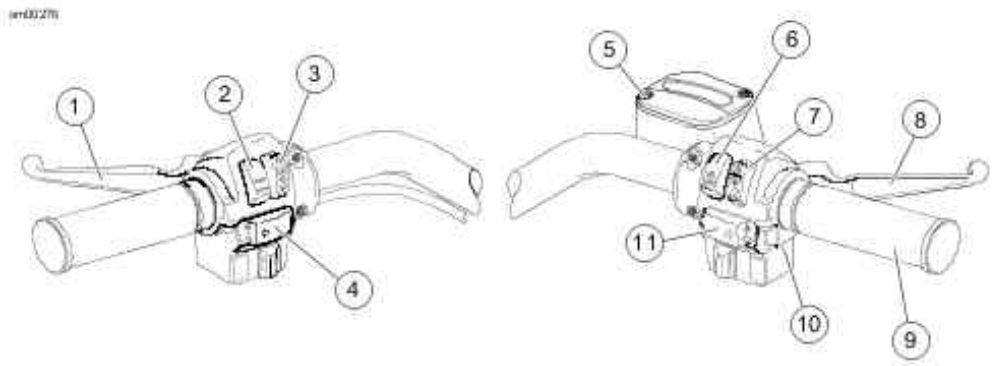

1. Clutch hand lever
2. Horn switch
3. Headlamp dimmer switch
4. Left turn signal switch
5. Master cylinder reservoir
6. Electric starter switch
7. Engine off/run switch
8. Brake hand lever
9. Throttle control grip
10. Throttle friction adjusting screw (not shown, not used on cruise control models)
11. Right turn signal switch

Basic Handlebar Controls: FLHRC Shown (typical)

Electronic Throttle Control (ETC)

Touring models are equipped with Electronic Throttle Control (ETC). Instead of using a mechanical cable connection to the throttle body, this technology uses redundant grip sensors to indicate rider requested throttle position to the Electronic Module (ECM). The ECM then regulates proper fuel/air intake and ignition timing based on the rider request. The grip sensor is manufactured with internal cams and spring retainer for natural feel and operation.

ETC operation is designed for rider safety and continued motorcycle operation, even in the event of a component failure. The Electronic Control Module monitors the status of the grip sensors, throttle plate actuation and airflow. If any problems are detected, the motorcycle will disable cruise control, illuminate the engine check lamp, and revert to one of the following fallback modes.

ETC Limited Performance Mode

The rider will experience near-normal operation. The motorcycle will operate with provisions to guard against unintended acceleration.

ETC Power Management Mode

The throttle plate actuator returns to an "idle detent" or "limp-home" position, which will provide enough torque to achieve speed of about 25 mph 40 kph . The motorcycle's response to grip sensor input is significantly reduced.

ETC Forced Idle Mode

The throttle plate actuator is forced to a "fast idle" position, which will provide enough torque to crawl, but not enough torque to operate at traffic speeds.

ETC Forced Shutdown Mode

The engine is forced to shut down.

Turn Signal Switch Operation

The turn signal switches are used by the turn signal module to control turn signal operation based on vehicle speed, vehicle acceleration and turn completion.

Momentarily depress the desired turn signal switch. The turn signal lamps will begin and continue flashing until they are manually or automatically cancelled. As long as the motorcycle is stationary, the signals will flash.

NOTES:

- *If you are signaling to turn in one direction and you depress the switch for the opposite turn signal, the first signal is cancelled and the opposite side begins flashing.*
- *If you want to stop the lamps from flashing, briefly depress the turn signal switch a second time. The turn signal lamps will stop flashing.*

Hazard Warning 4-Way Flasher

Use the following method to activate the four-way flashers.

1. With the ignition key ON and security system disarmed (models with security only), press the left and right turn signal switches at the same time.

2. Turn the ignition key OFF and arm the security system if present and desired. The four-way flashers will continue for two hours.

3. To cancel four-way flashing, disarm the security system if necessary, turn the ignition key ON and press the left and right turn signal switches at the same time.

This system allows a stranded vehicle to be left in the four-way flashing mode and secured until help is found.

Indicator Lamps

See Indicator Lamps. Five indicator lamps are provided.

- The green TURN indicators will flash when turn signals are activated; therefore, flashing indicates the chosen turn direction. When the 4-way hazard flashers are operating, both turn indicators will flash simultaneously.
- The blue BEAM indicator lamp, when lit, signals high beam headlamp operation.
- The green NEUTRAL lamp, when lit, signals the transmission is in neutral gear.
- The red OIL indicator lamp, when lit, signals that oil is not circulating through the engine.

NOTE:

The OIL indicator lamp will glow when the ignition is turned on prior to starting engine. With engine running, lamp should be off when engine speed is above idle.

Several other circumstances that could cause the red oil indicator lamp to signal, include the following:

- If the oil pressure indicator lamp does not go off at speeds above idling, it is usually because of an empty oil tank or diluted oil.
- In freezing weather the oil feed may clog with ice and sludge, preventing oil circulation.
- A grounded oil signal switch wire.
- A faulty signal switch.
- A damaged or improperly installed check valve.
- Trouble with the pump.

CAUTION

If the oil pressure indicator lamp remains lit, always check the oil supply first. If the oil supply is normal and the lamp is still lit, stop the engine at once and do not ride further until the trouble is located and the necessary repairs are made. Failure to do so may result in engine damage. (00157a)

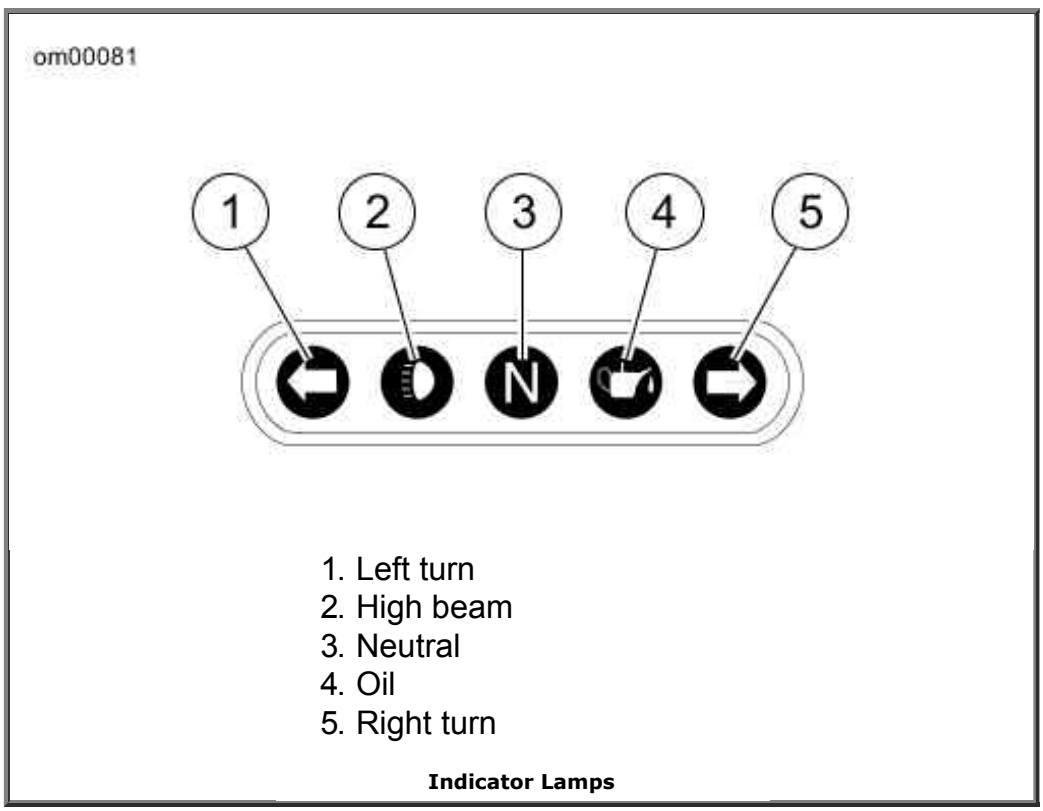

Indicator Lamps

Instruments: Touring Models

Speedometer

⚠WARNING

Travel at speeds appropriate for road and conditions and never travel faster than posted speed limit. Excessive speed can cause loss of vehicle control, which could result in death or serious injury. (00008a)

See Indicator Lamps: Touring Models. The speedometer registers miles per hour (U.S. models) or kilometers per hour (international models) of forward speed. The speedometer also provides the following selectable functions:

- Odometer
- Trip odometers A and B
- 12 or 24 hour clock (if radio not installed)
- Fuel range function

The speedometer has a single display window for the above functions. If an Advanced Audio System is installed, the radio will provide the clock function.

1. See Indicator Lamps: Touring Models. Pressing the function switch with the ignition switch in any position will activate the odometer reading and time. Time and mileage/kilometers may be checked without unlocking ignition switch. Press and release function switch once to view odometer. Press and release switch again to display time.

2. To check mileage on trip odometers, the ignition switch must be in the ACC or IGNITION position. Press and release the function switch until the desired trip odometer reading is displayed. An A or B in the upper left of the display window identifies trip odometers.

3. To reset or zero trip odometers, have desired (A or B) odometer in display window. Press function switch and hold switch for 2-3 seconds. The trip odometer will be reset to zero.

4. Repeat the previous step if you wish to zero both trip odometers.

Setting Clock

If the motorcycle is equipped with an Advanced Audio System, see the Advanced Audio System section in this manual to set the clock in the radio.

1. Turn the ignition switch to ACC or IGNITION.

2. See Indicator Lamps: Touring Models. Press function switch until time (hour and minutes) is displayed. Press and hold the function switch for five seconds or until 12HR begins to blink in the speedometer display window. Release the button.

3. Press and release the function switch once to advance to a blinking 24HR or military style time display. Each time you press and release the button, the display will switch between 12HR and 24HR.

4. When the desired time style is displayed, press and hold the function switch for five

seconds. The display will switch to the time display with the hours blinking.

NOTE:

There is no AM or PM time setting required. So when correct hour is reached, press and hold function switch to advance to minute setting.

5. Press and release the function switch repeatedly to advance the hours. Each time you press and release the switch, the display will advance one hour.
6. When the correct hour is displayed, press and hold the function switch for five seconds. The minutes display will start blinking.
7. Press and release the function switch repeatedly to advance the minutes display. Each time you press and release the button, the display will advance one minute.
8. When the correct minutes are displayed, press and hold the function switch for five seconds. The minutes display will stop blinking, indicating that the clock has been set.
9. Turn the ignition switch OFF.

Tachometer

CAUTION

See OPERATING RECOMMENDATIONS section. Do not operate the engine above maximum safe RPM as shown under OPERATION (red zone on tachometer). Lower the RPM by upshifting to a higher gear or reducing the amount of throttle. Failure to lower RPM may cause equipment damage. (00159a)

See Indicator Lamps: Touring Models. The tachometer measures the engine speed in revolutions per minute (RPM).

Tip Indicator Lamp

⚠WARNING

If tip occurs, check all controls for proper operation. Restricted control movement can adversely affect the performance of the brakes, clutch or ability to shift, which could result in loss of vehicle control and death or serious injury. (00350a)

Should motorcycle be tipped over, the word "tip" will appear in the odometer window. Engine will not start until reset. To reset, cycle ignition/headlamp key switch ON-OFF-ON.

Fuel Gauge

The fuel gauge indicates the approximate amount of fuel in the fuel tank(s) and is located to left of the speedometer or on the left front panel of the fairing.

NOTE:

The FLHR left side fuel cap is a fuel gauge only. Do not remove.

Oil Pressure Gauge (FLHT/FLTR/FLHX)

The oil pressure gauge indicates engine oil pressure and is found on the front panel of the fairing. Engine oil pressure will normally vary from 5 psi (34 kN/m2) at idle speed to 30-38 PSI (207-262 kN/m2) at 2000 RPM when engine is at normal operating temperature of 230° F (110° C).

Voltmeter (FLHT/FLTR/FLHX)

The voltmeter indicates electrical system voltage and is found on the front panel of the fairing. With the engine running above 1500 RPM, the voltmeter should register 13-14.5 volts with battery at full charge.

Air Temperature Gauge (FLHT/FLTR/FLHX)

The air temperature gauge indicates the ambient air temperature in degrees Fahrenheit. This gauge is found on the front panel of the fairing.

Fuel Range Function

The fuel range function shows the approximate mileage available with the amount of fuel left in the fuel tank.

1. With the ignition switch in the ACC or IGNITION position, press function switch until fuel range function is displayed, as indicated by the letter 'r' in the left side of the odometer display. The calculated remaining distance (miles or kilometers) to empty is displayed, based on the amount of fuel in tank. Range can be accessed at any time using the function switch.

2. When the low fuel warning lamp illuminates, the range feature will automatically be displayed in the odometer unless this automatic pop-up feature is disabled by a press and hold of the function switch while in range display mode. Automatic range pop-up feature will show that it is disabled by blinking twice. Likewise, automatic range pop-up can be reactivated by a press and hold of the function switch. Range will blink once when the automatic pop-up feature is reenabled.

   NOTE:

   When the low fuel warning lamp turns on, there is approximately 1 gallon 3.8 liters of fuel remaining in the tank. Refuel as soon as possible.

3. After the range calculation reaches 10 miles 16 kilometers remaining, the range display will show "r Lo" to indicate that the vehicle will shortly run out of fuel.

4. The range display is only updated when the vehicle is moving 10 mph 16 km/h or greater.

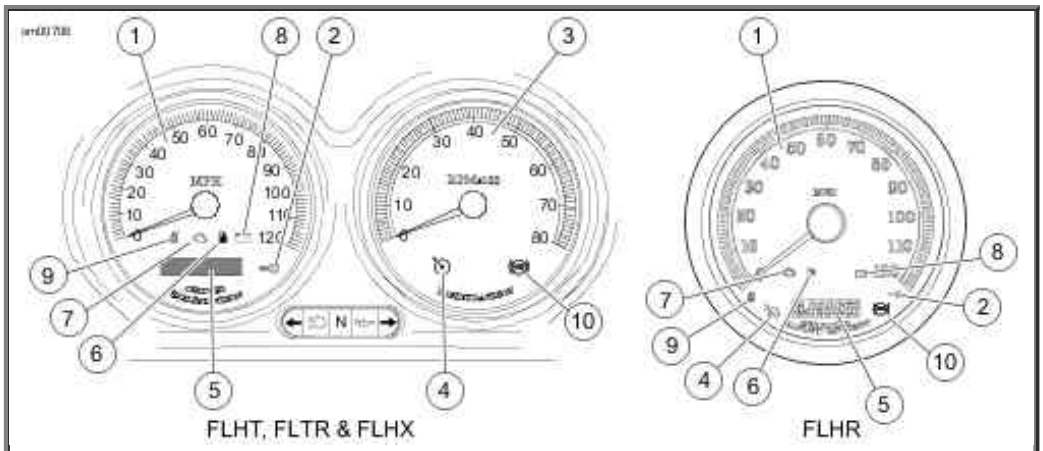

1. Speedometer
2. Security system lamp
3. Tachometer
4. Cruise lamp
5. Odometer/trip-odometer/clock
6. Low fuel warning lamp
7. Engine check lamp
8. Battery discharge lamp
9. Sixth gear lamp
10. ABS lamp

Indicator Lamps: Touring Models

Indicator Lamps: Touring Models

Engine Check Lamp

See Indicator Lamps: Touring Models. The engine check lamp is located near the lower left side of the speedometer (FLHT models) face or lower center of the speedometer (FLHR models) face. Its purpose is to indicate whether or not the engine/engine management system is operating normally. The engine lamp color is amber.

The engine lamp normally comes on when the bike's ignition is first turned on and remains on for approximately 4 seconds, as the engine management system runs a series of self-diagnostics.

If the engine lamp comes on at any other time, see a Harley-Davidson dealer.

Low Fuel Lamp

See Indicator Lamps: Touring Models. The low fuel lamp is located in the speedometer face, lower center by check engine lamp. The low fuel lamp illuminates to indicate that you have approximately 1 gallon 3.8 liters of gasoline left in the tank. The low fuel lamp color is amber.

Cruise Control Equipped Models

See Indicator Lamps: Touring Models. Cruise control equipped models feature two additional indicator lamps.

- An orange lamp on the cruise control switch which indicates the cruise control is ON or OFF.

- A green lamp on the tachometer (speedometer for FLHR models) face indicates the cruise control is SET or NOT SET.

NOTE:

Touring Models are either equipped with cruise control or are cruise control ready. See a Harley-Davidson dealer for more information.

ABS Lamp

See Indicator Lamps: Touring Models. On ABS equipped models, the amber ABS indicator lamp begins to flash at key ON to indicate that the system is operational. It continues to flash until motorcycle speed exceeds 3 mph 5 km/h . Continuous illumination of the lamp will only occur when ABS detects that the system is malfunctioning. In the diagnostic mode, the lamp will also illuminate to indicate the presence of diagnostic trouble codes (DTCs). See a Harley-Davidson dealer for service.

⚠WARNING

If ABS lamp remains on continuously, the ABS is not operating. The standard brake system is operational, but wheel lock up can occur. Contact a Harley-Davidson Dealer to have ABS repaired. A locked wheel will skid and can cause loss of vehicle control, which could result in death or serious injury. (00361a)

Cruise Control: Touring Models

Operating Controls

The cruise control system provides automatic vehicle speed control.

⚠WARNING

Do not use the cruise control system in heavy traffic, on roads with sharp or blind curves or on slippery roads of any kind. Using the cruise control in these circumstances can cause loss of control, which could result in death or serious injury. (00083a)

See Cruise Control Fairing Cap Switch. A fairing cap cruise control switch located to the right of the ignition/headlamp key switch turns the cruise control system ON and OFF.

On FLHR models, the cruise control switch housing is on the left handlebar.

NOTE:

The cruise control icon on the speedometer or tachometer will turn orange to indicate the cruise control is ON. If the orange icon does NOT come on, the system is NOT ON. You cannot SET cruise speed, see your dealer.

See RESUME/SET Switch. RESUME/SET switch located in the right handlebar control group.

The RESUME/SET switch controls several system functions, including set, resume, accelerate and decelerate.

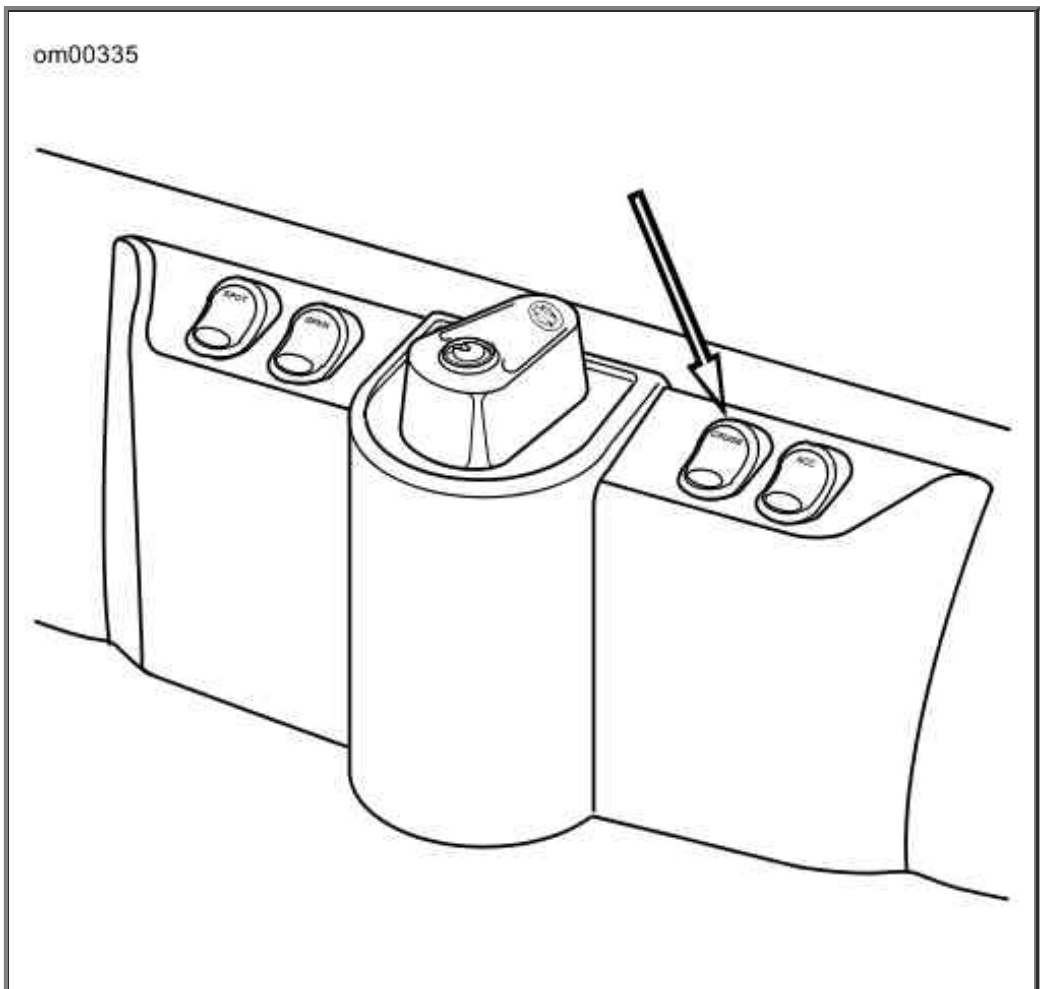

Cruise Control Fairing Cap Switch

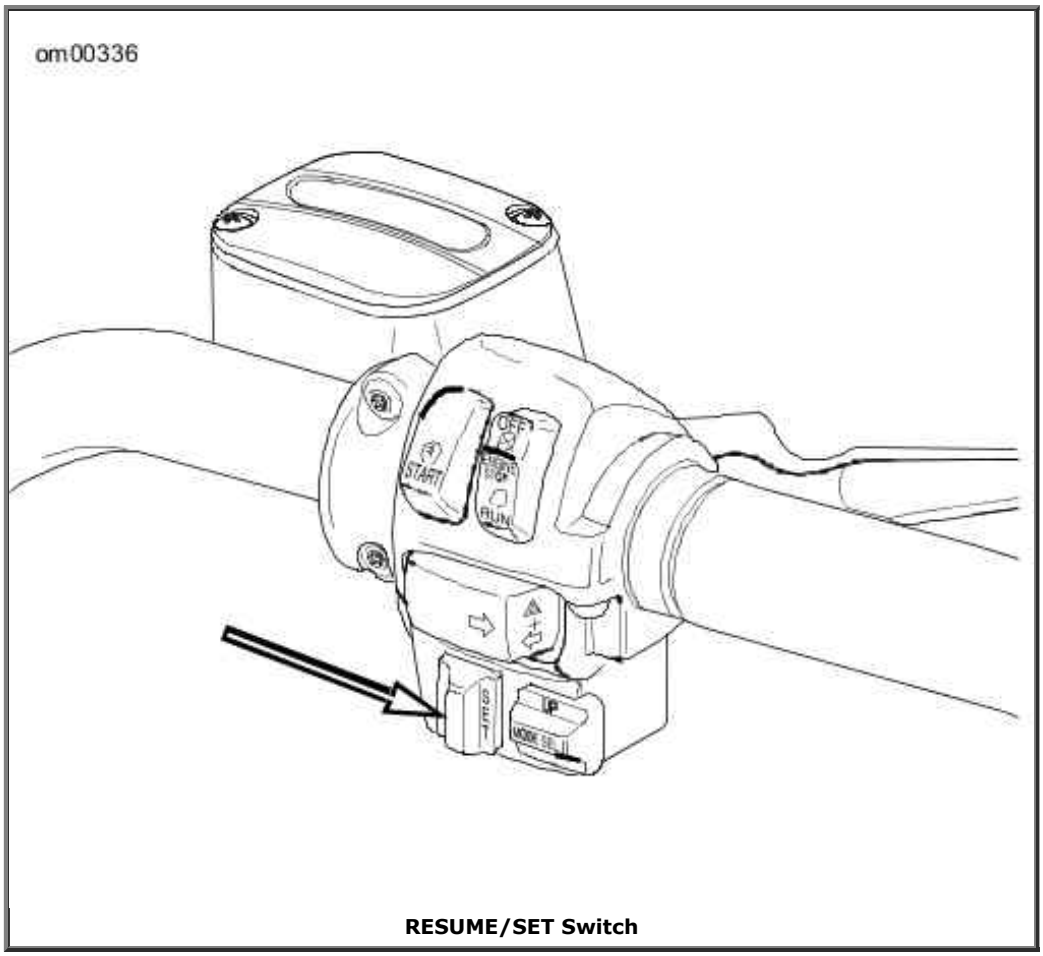

RESUME/SET Switch

Cruise Control Operation

Theory of Operation

The cruise control is designed to be safely operated with minimum movement by the rider and all rider control actions are natural and easy.

NOTES:

- *The rider always over-rides and controls the system.*
- *The system will not work at vehicle speeds below 30 mph 48 km/h or above 85 mph 137 km/h .*
- *The system is managed by the ECM. The tachometer provides information to disengage the system if the engine RPM suddenly increases.*
- *Besides the ECM, the system has other components: a stepper-motor (controlled by the computer) which operates the throttle during CRUISE operation, and several internal switches, all sending information to the computer.*
- *The system will allow rider to increase speed 10 mph 16 km/h or more (depending on how hard the rider rolls on the throttle and the condition of the bike) over the SET point before deactivating. This feature allows the rider to momentarily increase speed, if necessary. Rolling on the throttle to greatly increase speed may deactivate the system.*

Engaging Cruise Control

1. See Indicator Lamps: Touring Models. Turn the cruise control switch to the ON position. The orange icon on the cruise gauge face will light when activated.

2. With the motorcycle traveling at the desired cruise speed of 30-85 mph 48-137 km/h , momentarily push the RESUME/SET switch on the right handlebar to SET. After a delay of about 1-1/2 seconds, the icon will turn green on the face of the gauge to indicate the selected cruising speed is locked in.

Disengaging Cruise Control

The cruise control automatically disengages whenever the cruise control module receives one of the following inputs:

1. Front and/or rear brake is applied.
2. Throttle is rolled back or closed, thereby actuating roll-off (disengage) switch.
3. Motorcycle clutch is disengaged (module senses too great an increase in RPM).
4. Vehicle speed is out of the operating range.

NOTE:

Rolling on the throttle more than 10 mph 16 km/h above the set speed may also deactivate the cruise control.

When the cruise is disengaged, the green cruise engaged icon on the face of the gauge changes to orange. The orange cruise control system icon remains ON until the main switch is turned off.

However, should you decide to SET a cruise speed, RESUME last set speed, ACCELERATE or DECELERATE, simply press the RESUME/SET switch.

Resuming Cruise Speed

If the system is deactivated using one of the methods described under DEACTIVATING CRUISE CONTROL, the system is still ON should you decide to RESUME the set speed. To accomplish this, simply press the RESUME/SET switch to RESUME.

NOTE:

The computer will hold the SET speed in memory for the RESUME function. If the vehicle speed drops more than 15 mph 24 km/h below the SET speed, speed can no longer be RESUMED. If cruise operation is still desired, press the RESUME/SET switch to SET to reset the cruise speed.

Accelerating Above Cruise Speed

1. With the cruise speed set, momentarily press the RESUME/SET switch to RESUME to increase the speed by 1 mph 1.6 km/h .
2. Pressing and holding the RESUME/SET switch at RESUME will cause the system to continue to increase speed in increments of approximately 1 mph 1.6 km/h until the switch is released. There is a delay of about 2 seconds before the speed increases.

Decelerating Cruise Control

1. With the cruise speed set, momentarily press the RESUME/SET switch to SET to reduce the speed by 1 mph 1.6 kph .
2. Pressing and holding the RESUME/SET switch at SET will cause the system to continue to reduce speed in increments of approximately 1 mph 1.6 kph until the switch is released. There is a delay of about 2 seconds before the speed decreases.

Deactivating Cruise Control

Turn cruise control switch to the OFF position. The orange icon in the gauge is extinguished to indicate the system is OFF.

NOTES:

System will NOT work if:

- *Rider operates bike at vehicle speeds below 30 mph 48 km/h or above 85 mph 137 km/h .*
- *Brake lamps are on constantly. See dealer.*

Gear Shift Lever: Touring Models

Location

CAUTION

The clutch must be fully disengaged before attempting a gear shift. Failure to fully disengage the clutch can result in equipment damage. (00182a)

The gear shift lever is located on the left side of the motorcycle and is operated with the left foot. The gear shift lever shifts the six-speed transmission from one gear to the next.

Shift Pattern

See Shift Pattern: 6-Speed Touring Models. The shift pattern is sequential with first gear down and five gears up.

The transmission is shifted into first gear from neutral by pressing the shift lever down until it clicks into gear.

Neutral is located between first and second gear. The green neutral indicator lamp on the dash will illuminate when the transmission is in neutral.

To shift from first gear to neutral, lift the gear shift lever 1/2 of its full stroke.

To upshift to the next higher gear, lift the gear shift lever up until it clicks into gear.

To downshift to the next lower gear, press the gear shift lever down until it clicks into gear.

NOTES:

Release the foot shift lever after each gear change. This allows the lever to return to its central

position before another gear change can be made.

Heel-Toe Foot Shifter

See Shift Pattern: 6-Speed Touring Models. Touring Models are fitted with a heel-toe shifter lever. Two shift levers are fitted to the shifter shaft - one facing forward and one rearward.

The toe of the left foot can upshift or downshift using the front shift lever. However, the rider has the option of upshifting with the heel on the rear facing shift lever.

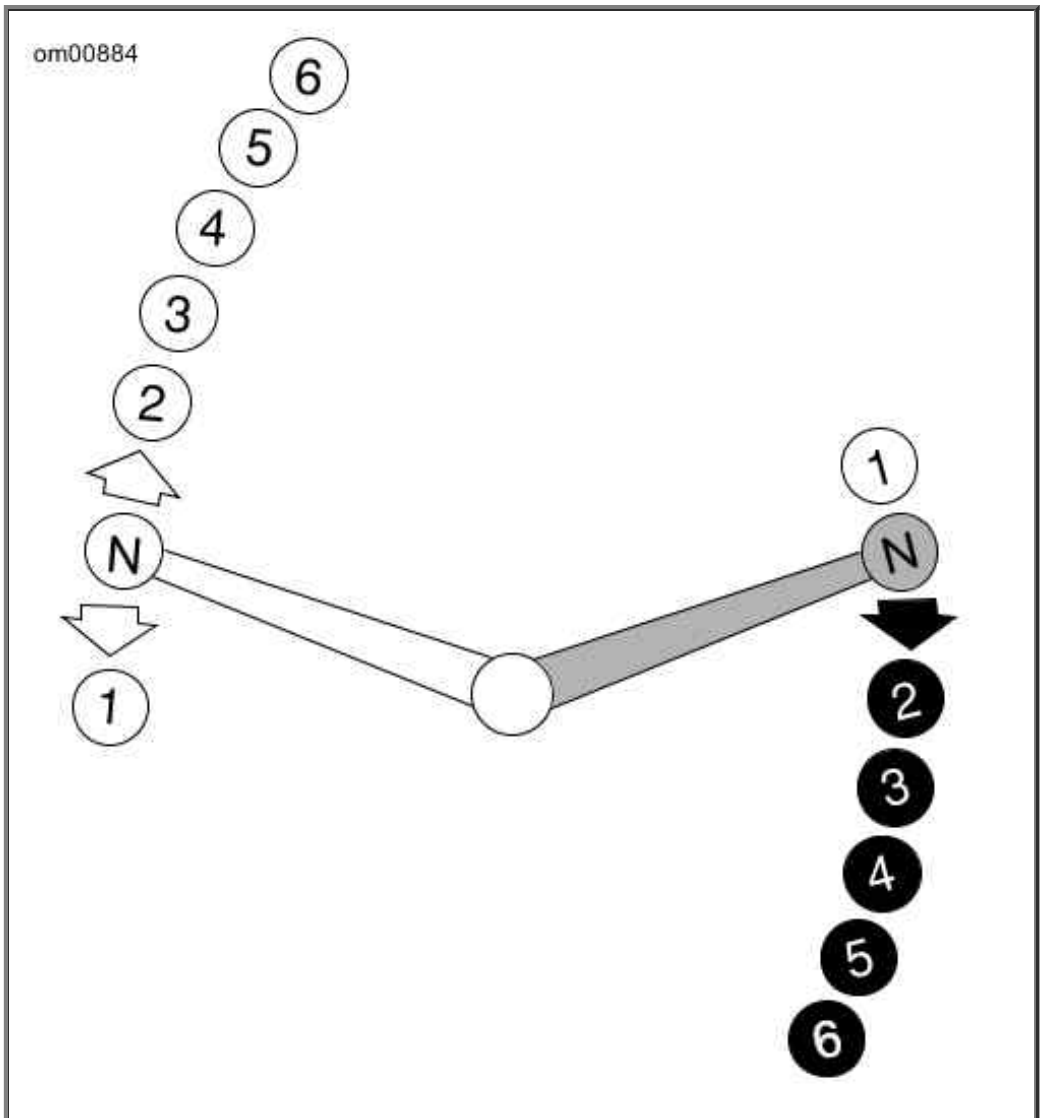

Shift Pattern: 6-Speed Touring Models

Shifting While Stopped

CAUTION

When difficulty of shifting gears is experienced, do not under any circumstances, attempt to force the shift. The results of such abuse will be a damaged or broken shifter mechanism. (00161a)

When the motorcycle is standing still in first gear with the engine off or in neutral with the engine

running, the transmission may not shift gears. Because the rear wheel and drive belt are not turning, the transmission gear teeth and engagement dogs can not line up.

To get one gear to disengage and the next gear to engage, pull the clutch lever in and move the motorcycle backward and forward while maintaining slight pressure on the shift lever.

See Shifting Gears for more information.

Brake System

General

The rear brake pedal controls the rear wheel brake and is located on the motorcycle's right side. Operate the rear brake pedal with the right foot.

The front brake hand lever controls the front wheel brake and is located on the right handlebar. Operate the hand lever with the fingers of the right hand.

⚠WARNING

Do not position fingers between hand control lever and handlebar grip. Improper hand positioning can impair control lever operation and cause loss of vehicle control, which could result in death or serious injury. (00032a)

Some models are equipped with an anti-lock braking system.

Non-ABS Brake System

Apply brakes uniformly and evenly to prevent wheels from locking. Use front and rear brakes equally for best results.

⚠WARNING

Do not apply brake strongly enough to lock the wheel. A locked wheel will skid and can cause loss of vehicle control, which could result in death or serious injury. (00053a)

Anti-lock Brake System (ABS)

Harley-Davidson's Anti-Lock Brake System assists the rider in maintaining control when braking in a straight-line emergency situation. ABS operates independently on front and rear brakes to keep the wheels rolling and prevent uncontrolled wheel lock-ups either on dry pavement or on slick surfaces such as gravel, leaves or when riding in wet conditions.

ABS: How It Works

The ABS monitors sensors at the front and rear wheels to determine wheel speed. If the system detects one or both wheels are slowing down too quickly, which indicates they are close to locking, or if the deceleration rate does not match a criteria stored in memory, the ABS reacts. The system rapidly opens and closes valves to modulate the brake pressure being applied by the rider. During ABS activation, the system provides the electronic equivalent of manually pumping the brakes and is capable of cycling up to seven times per second.

The rider will recognize ABS activation by the slight pulsing sensation in the hand lever or the rear brake pedal. The pulsing sensation may also be accompanied by a clicking sound from the ABS module. Both are the result of normal operation. Refer to ABS Symptoms and Conditions.

ABS: How To Use

While an advantage in emergency braking, ABS is not a substitute for safe riding. The safest way to stop a motorcycle is upright with both wheels straight.

Harley-Davidson ABS is a manual assist system. When in an emergency stopping situation, maintain pressure on the brakes through all ABS events. Do not modulate or "pump" the brake controls. The wheels won't lock until the end of the stop when motorcycle speed reaches approximately four miles per hour and ABS is no longer needed.

⚠WARNING

ABS cannot prevent lockup of rear wheel due to engine braking. ABS will not aid in cornering or on loose/uneven surfaces. A locked wheel will skid and can cause loss of vehicle control, which could result in death or serious injury. (00362a)

More information is available at www.harley-davidson.com/abs.

ABS: Tires and Wheels

ABS motorcycles must always use tires and wheels that are the same as the original equipment. The ABS monitors the rotational speed of the wheels through individual wheel speed sensors. Changing to different diameter wheels or different sized tires can alter the rotational speed. This can upset the calibration of the ABS and have an adverse effect on its ability to detect and prevent uncontrolled wheel lockups. Tire inflation pressure that is significantly low also can have an adverse effect.

ABS Symptoms and Conditions

SYMPTOM	CONDITION
Pulsing brake lever or pedal during an ABS event	Normal condition.
Clicking sound during an ABS	Normal condition.

event	
ABS lamp flashing	Normal condition - key turned to IGNITION - speed under 3 mph 5 km/h .
Perceived "surge" while braking	Normal condition - noticeable when braking with one brake (front only or rear only). Result of a reduction in deceleration which can be caused by cracks or bumps in road, engine braking (high engine RPMs causing the rear wheel to slow down), hard braking at slow speeds, and other conditions.
Temporarily stiff rear brake pedal	Normal condition - engine braking (high engine RPMs causing the rear wheel to slow down) or down shifting can activate ABS. If applying the rear brake at the same time or immediately after, the ABS may be closing a valve to prevent pressure to the rear brake.
Tire chirp	Normal condition - depending on surface, tire can chirp without locking the wheel.
Black mark on pavement	Normal condition - depending on surface, tire can leave a black mark without locking the wheel.
Wheel lock at low speed	Normal condition - ABS will not activate on front wheel below 3 mph 5 km/h or on rear wheel below 5 mph 8 km/h .

Jiffy Stand

⚠WARNING

Always park motorcycle on a level, firm surface. An unbalanced motorcycle can fall over, which could result in death or serious injury. (00039a)

The jiffy stand is located on the left side of the motorcycle and swings outward to support the motorcycle for parking.

⚠WARNING

The jiffy stand locks when placed in the full forward (down) position with vehicle weight on it. If the jiffy stand is not in the full forward (down) position with vehicle weight on it, the vehicle can fall over which could result in death or serious injury. (00006a)

⚠WARNING

Be sure jiffy stand is fully retracted before riding. If jiffy stand is not fully retracted, it can contact the road surface causing a loss of vehicle control, which could result in death or serious injury. (00007a)

Jiffy Stand Interlock: International Models

International models are equipped with a jiffy stand interlock feature.

If the rider attempts to start the engine or pushes the starter button while the transmission is in gear and the jiffy stand is down, then the jiffy stand interlock system will not permit the engine to run. The message "SidE StAnd" will scroll across the odometer to indicate this to the rider. Raising the jiffy stand (or putting the transmission in neutral) will permit the engine to run and clear the message.

If the jiffy stand falls out of the fully retracted position while riding at speeds greater than 10 mph 15 kph , then the jiffy stand interlock system will maintain engine operation and alert the rider about this by illuminating the indicators (flash twice) and scroll the message "SidE StAnd" across the odometer. The message will remain until the system detects the jiffy stand in the fully retracted position again. The rider may continue to operate the vehicle while in this mode.

The rider may clear the text messages at any time by pressing the function switch once while the vehicle is powered up.

NOTE:

If the operation of raising the jiffy stand and putting the transmission in gear is rapidly executed, the jiffy stand bouncing off the frame could cause the jiffy stand interlock system to activate and stop the engine.

Rear View Mirrors

⚠WARNING

Objects in mirrors are closer than they appear. Use caution when judging distance of objects in mirrors. Failure to judge correct distances could result in death or serious injury. (00033a)

Your vehicle is equipped with two convex rear view mirrors.

This type of mirror is designed to give a much wider view to the rear than a flat mirror. However, cars and other objects seen in this type of mirror will look smaller and farther away than they actually are.

- Use caution when judging the size or relative distance of objects seen in rear view mirrors.
- Always adjust the rear view mirrors to clearly reflect the area behind the motorcycle before riding.

NOTE:

Adjust mirrors so you can see a small portion of your shoulders in each mirror. This will help you establish the relative distance of vehicles to the rear of your motorcycle.

Fuel Filler Cap: Touring Models

To open, turn fuel filler cap counterclockwise and lift up. To close, turn fuel filler cap clockwise until it clicks. The ratchet action of the cap prevents overtightening.

Remove the fuel filler cap slowly. Fill fuel tank slowly to prevent fuel spillage. Do not fill above the bottom of the filler neck insert. Leave enough air space to allow for fuel expansion. Expansion can cause an overfilled tank to overflow fuel through the filler cap vent onto surrounding areas. After refueling, be sure filler cap is securely tightened. Gasoline is extremely flammable and highly

explosive. Inadequate safety precautions could result in death or serious injury.

NOTES:

- *FLHT/FLTR model fuel filler cap is located beneath a door and have a ratchet action. The fuel filler cap should be fully closed before closing the fuel door.*
- *Fuel filler cap turns approximately a 3/4 turn before it starts unscrewing.*
- *See Fuel Tank: FLHR. FLHR model fuel filler cap is located on the right side of the fuel tank. The cap on the left side is the fuel gauge and is not removable.*

See SAFE OPERATING RULES and review safety procedures listed below.

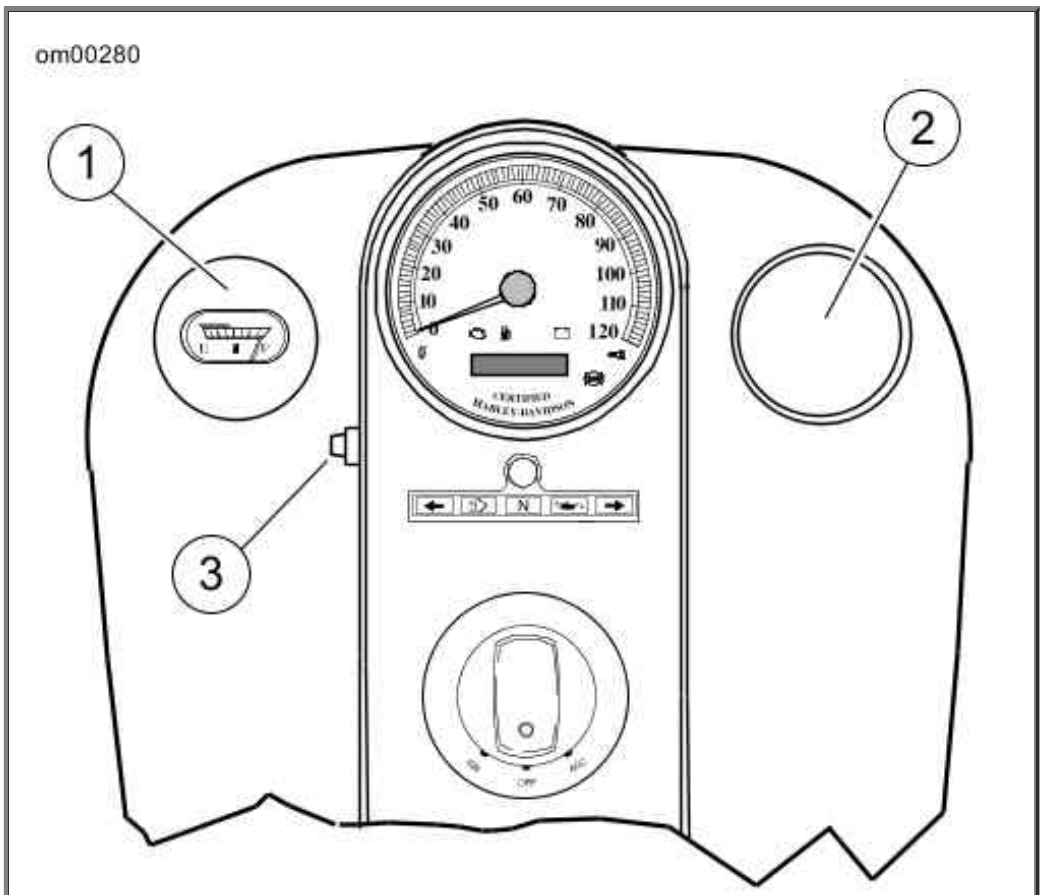

1. Fuel gauge
2. Fuel filler cap
3. Function switch

Fuel Tank: FLHR

CAUTION

Do not spill fuel onto the motorcycle while refueling. Immediately wipe up fuel spills on your motorcycle. Fuel can cause damage to cosmetic surfaces. (00147b)

CAUTION

Use only unleaded fuel in catalytic converter-equipped motorcycles. Using leaded fuel will damage the emission control system. (00150b)

⚠WARNING

Do not store motorcycle with gasoline in tank within the home or garage where open flames, pilot lights, sparks or electric motors are present. Gasoline is extremely flammable and highly explosive, which could result in death or serious injury. (00003a)

⚠WARNING

Avoid spills. Slowly remove filler cap. Do not fill above bottom of filler neck insert, leaving air space for fuel expansion. Secure filler cap after refueling. Gasoline is extremely flammable and highly explosive, which could result in death or serious injury. (00028a)

⚠WARNING

Do not use aftermarket fuel caps. Aftermarket fuel caps may fit improperly and leak, which could lead to death or serious injury. See a Harley-Davidson dealer for approved fuel caps. (00034a)

Rear Air Suspension

General

See Rear Air Suspension Air Valve. All models feature air-adjustable rear suspension. Air pressure in the rear shocks may be adjusted to suit load requirements, riding style and personal comfort.

- For FLHR/C, FLHT/C/U and FLTR models with standard shocks, refer to Standard Rear Suspension Recommended Air Pressure: FLHR/C, FLHT/C/U and FLTR.
- For FLHX models with low profile shocks, refer to Low Profile Rear Suspension Recommended Air Pressures: FLHX.

NOTE:

These are recommended starting points. Adjust to suit load conditions, riding style and comfort desired. Less initial pressure does not necessarily result in a softer ride. Using pressures outside the recommended loading range will result in a reduction of available suspension travel and reduced rider comfort.

Standard Rear Suspension Recommended Air Pressure: FLHR/C, FLHT/C/U and FLTR

SHOCK LOAD	TOTAL WEIGHT		PRESSURE	
	LB.	KG	PSI	kPa
Solo rider	up to 150	0-68	0	0
Solo rider	150-200	68-91	0-10	0-69
Solo rider	200-250	91-113	5-15	35-103

Rider with passenger weight of	up to 150	0-68	10-15	69-103
Rider with passenger weight of	up to 200	0-91	20-25	138-172
Maximum GVWR	see label		20-35	138-241

Low Profile Rear Suspension Recommended Air Pressures: FLHX

SHOCK LOAD	TOTAL WEIGHT		PRESSURE	
	LB.	KG	PSI	kPa
Solo rider	up to 160	0-73	0-5	0-35
Solo rider	160-200	73-91	0-10	0-69
Solo rider	over 200	91	5-10	35-69
Rider with passenger weight of	up to 150	0-68	20-30	138-207
Rider with passenger weight of	over 150	over 68	25-35	172-241
Maximum GVWR	see label		40-50	276-345

Adjusting Shock Pressure

See Rear Air Suspension Air Valve. To adjust the rear shock air pressure, use an air pump to fill or release air from the air valve located just below the frame cover on the left side of the vehicle.

CAUTION

Do not exceed maximum air pressure for rear suspension. Air components fill rapidly. Therefore, use low air line pressure. Failure to do so may result in possible damage to components. (00165a)

NOTE:

An AIR SUSPENSION PUMP AND GAUGE HD-34633 is available at your Harley-Davidson dealer.

⚠WARNING

Use caution when bleeding air from the suspension. Moisture combined with lubricant may leak onto the rear wheel, tire and/or brake components and adversely affect traction, which could result in death or serious injury. (00084a)

NOTES:

- *Do not exceed max GVWR or GAWR.*
- ***ON FLHX MODELS:*** *Always clear the line by adding 3-5 psi 21-35 kPa before releasing air from the pump's valve, but do not exceed 50 psi 345 kPa .*

- ***ON ALL BUT FLHX MODELS:*** *Always clear the line by adding 3-5 psi 21-35 kPa before releasing air from the pump's valve, but do not exceed 35 psi 241 kPa .*

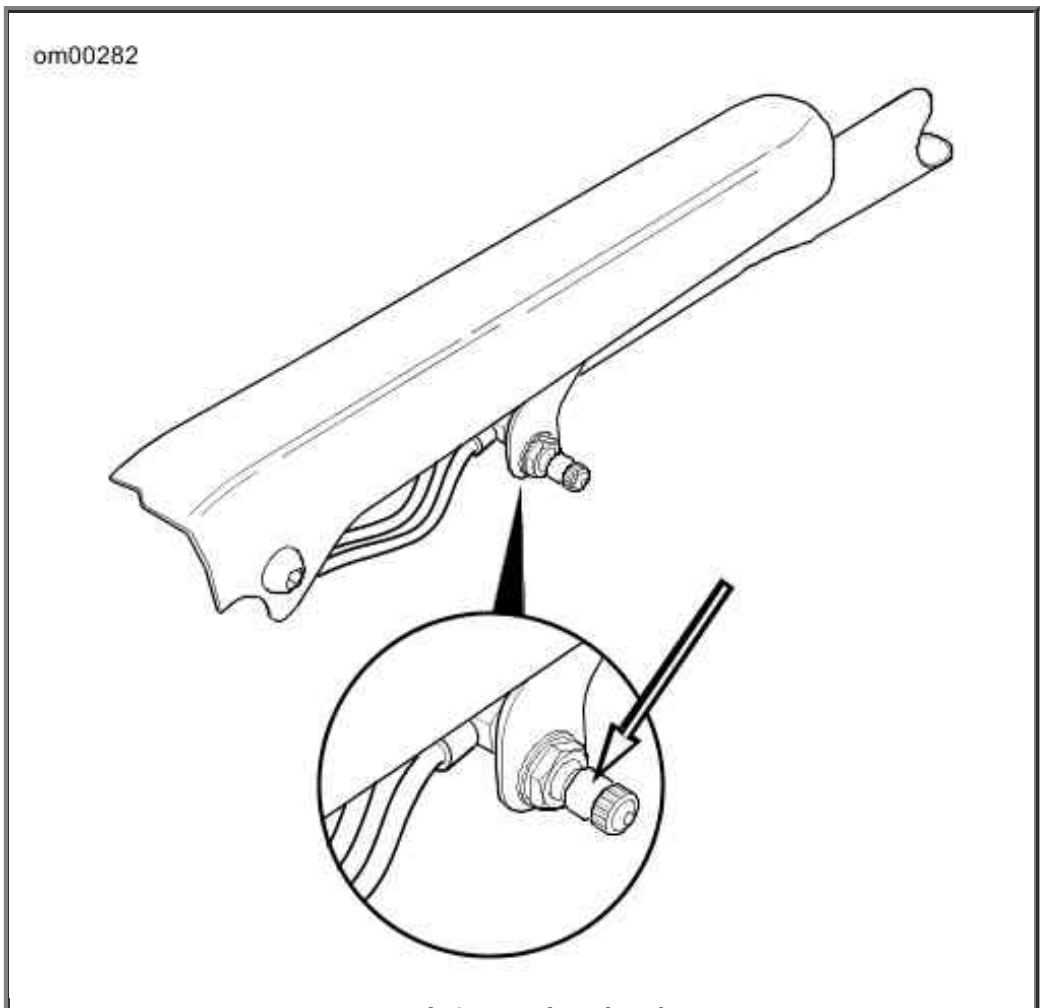

Rear Air Suspension Air Valve

Luggage

⚠WARNING

Do not exceed the motorcycle's Gross Vehicle Weight Rating (GVWR) or Gross Axle Weight Rating (GAWR). Exceeding these weight ratings can affect stability and handling, which could result in death or serious injury. (00016e)

GVWR is the sum of the weight of the motorcycle, accessories, and the maximum weight of the rider, passenger and cargo that can be safely carried.

GAWR is the maximum amount of weight that can be safely carried on each axle.

The GVWR and GAWR is shown on the information plate, located on the frame steering head.

Tour-Pak

Operation

See Tour-Pak Lock and Draw Catch. Unlock lock and open draw catches.

Removal/Installation

⚠CAUTION

Do NOT pull on any electrical wires. Pulling on electrical wires may damage the internal conductor causing high resistance, which may result in minor or moderate injury. (00168a)

The Tour-Pak can be located in two positions. See the service manual or a Harley-Davidson dealer about Tour-Pak removal/relocation.

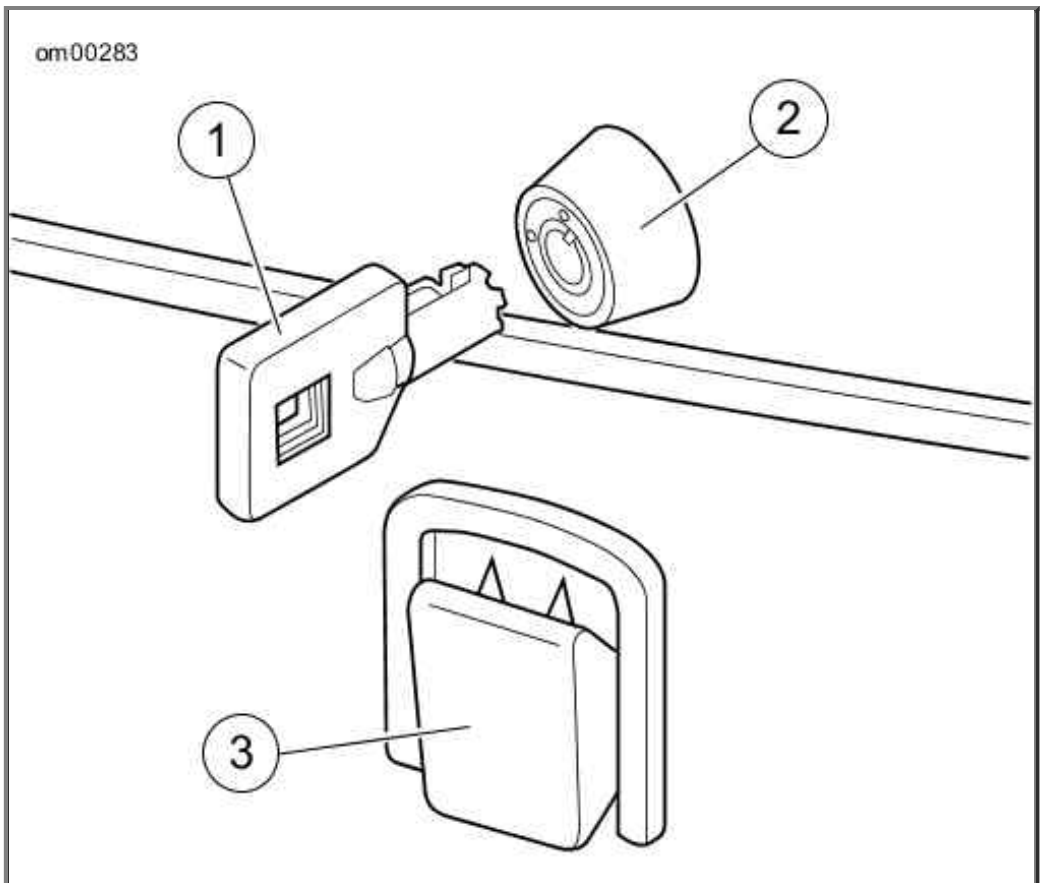

1. Key
2. Lock
3. Draw catch

Tour-Pak Lock and Draw Catch

Saddlebags: FLHR/FLHT/FLHX/FLTR

Opening

1. See Saddlebags: FLHT/FLTR. Unlock latch.
2. Place fingers under latch and lift.

3. Place one hand at OUTSIDE CORNER of cover and other hand at opposite outside corner.
4. Lift outside edge of cover, pivoting inside edge of cover in brackets.
5. Lift inside edge of cover to disengage brackets.
6. Bring cover towards you, over saddlebag.
7. As you bring cover toward you, let it flip over, so the inside faces up. Let cover rest against rub bars and nylon check strap.

NOTE:

The saddlebag lids are designed to stay attached to the bags at all times.

Closing

---

1. See Saddlebags: FLHT/FLTR. Use both hands to hold OUTSIDE corners of cover up and slide inside edge back into place so brackets slide together.
2. Close lid and secure latch. Brackets will engage automatically.

NOTE:

Saddlebag latch and Tour-Pak draw catches should be closed and locked whenever motorcycle is in operation.

Removing

See Bail Head Studs. The saddlebags are secured to the support brackets by 1/4 turn fasteners called bail head studs.

NOTE:

If your vehicle (international only) does not have the wire form "bail", use a flat bladed screwdriver to turn the studs.

1. Unscrew saddlebag fasteners by turning 1/4 turn counterclockwise.
2. Remove saddlebag.

Installing

Carefully place saddlebag in position on saddlebag rail and align the bail head studs with the support bracket fasteners.

1. See Bail Head Studs. Fasten studs by pushing into support bracket fasteners and turning 1/4 turn clockwise.
2. Check that studs are securely fastened.

Adjustments

If the latches become loose, you can adjust the latch fingers.

CAUTION

Adjust the latch fingers only enough to enable them to properly engage the latch hinge. Bending latch fingers back and forth can overstress the metal and weaken the fingers. (00169a)

1. Bend the fingers until they firmly engage the hinge.
2. See Miscellaneous Lubrication for lubrication details.

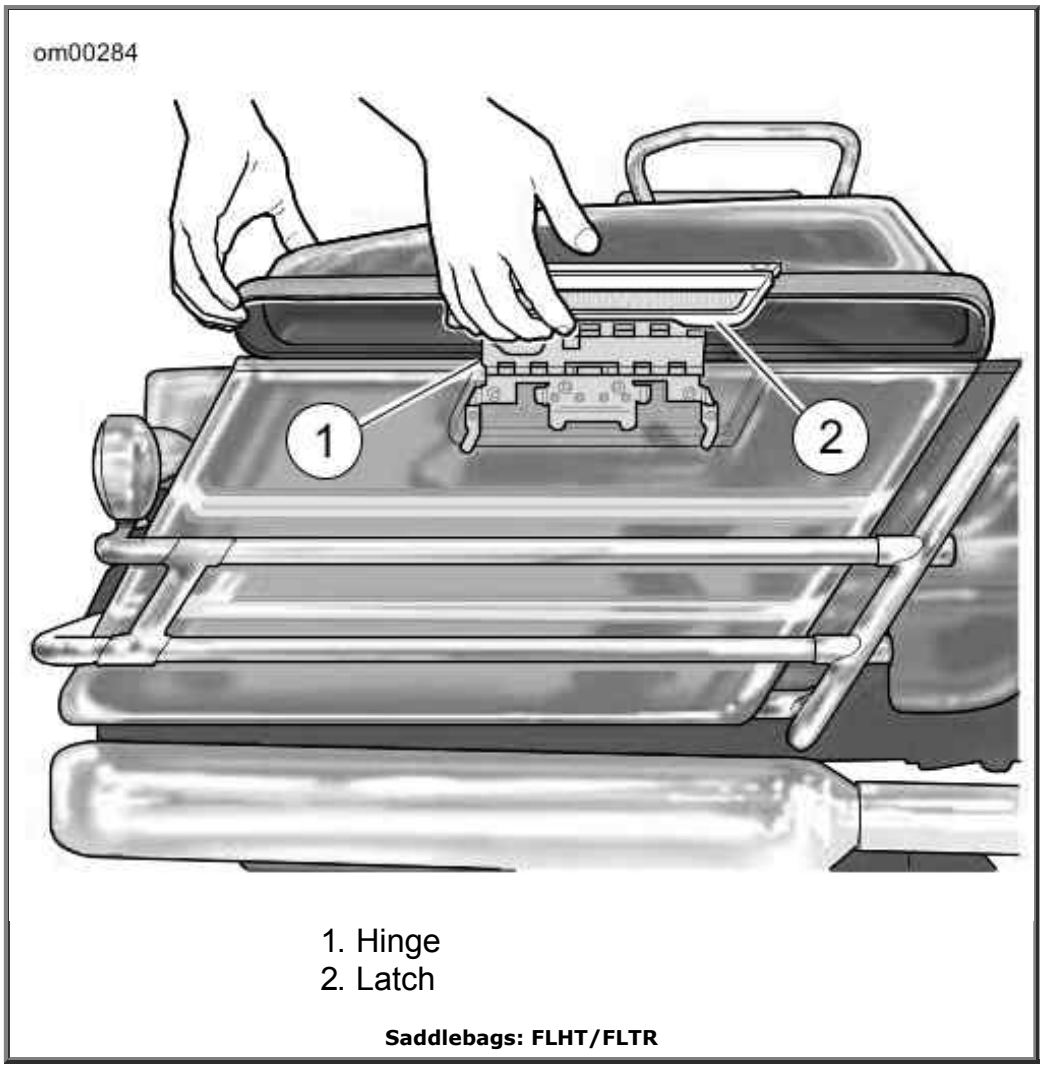

1. Hinge
2. Latch

Saddlebags: FLHT/FLTR

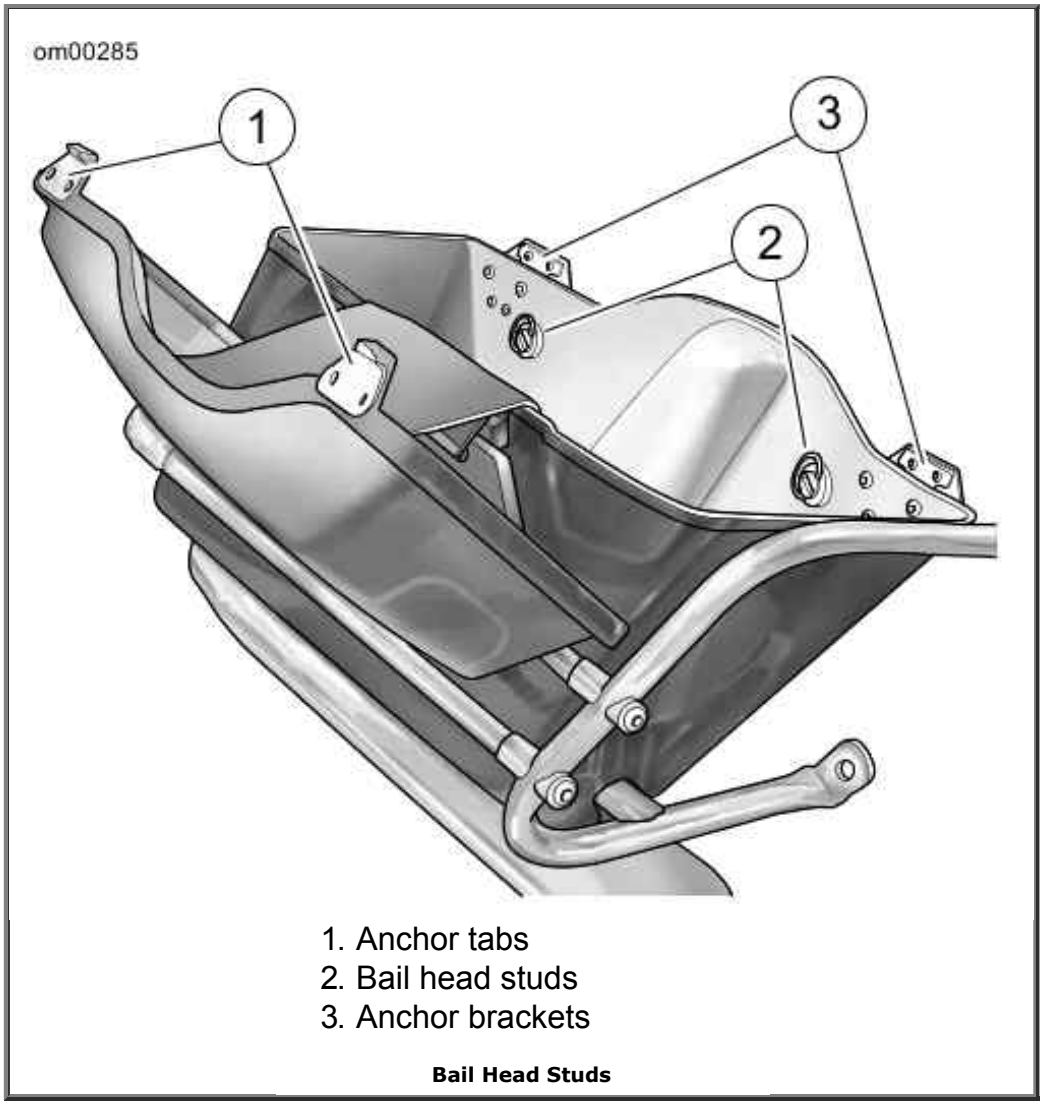

1. Anchor tabs
2. Bail head studs
3. Anchor brackets

Bail Head Studs

Saddlebags: FLHRC

Opening

See Saddlebag Quick Disconnect. To use the quick disconnect strap feature, lift up the strap end to expose the quick release buckle and press on the lock tabs as shown.

The straps may also be opened and closed using the buckle in a conventional manner.

Closing

Insert the male strap end into the receptacle on the bag and push until a positive "click" is felt.

NOTE:

See Leather Care for proper saddlebag care.

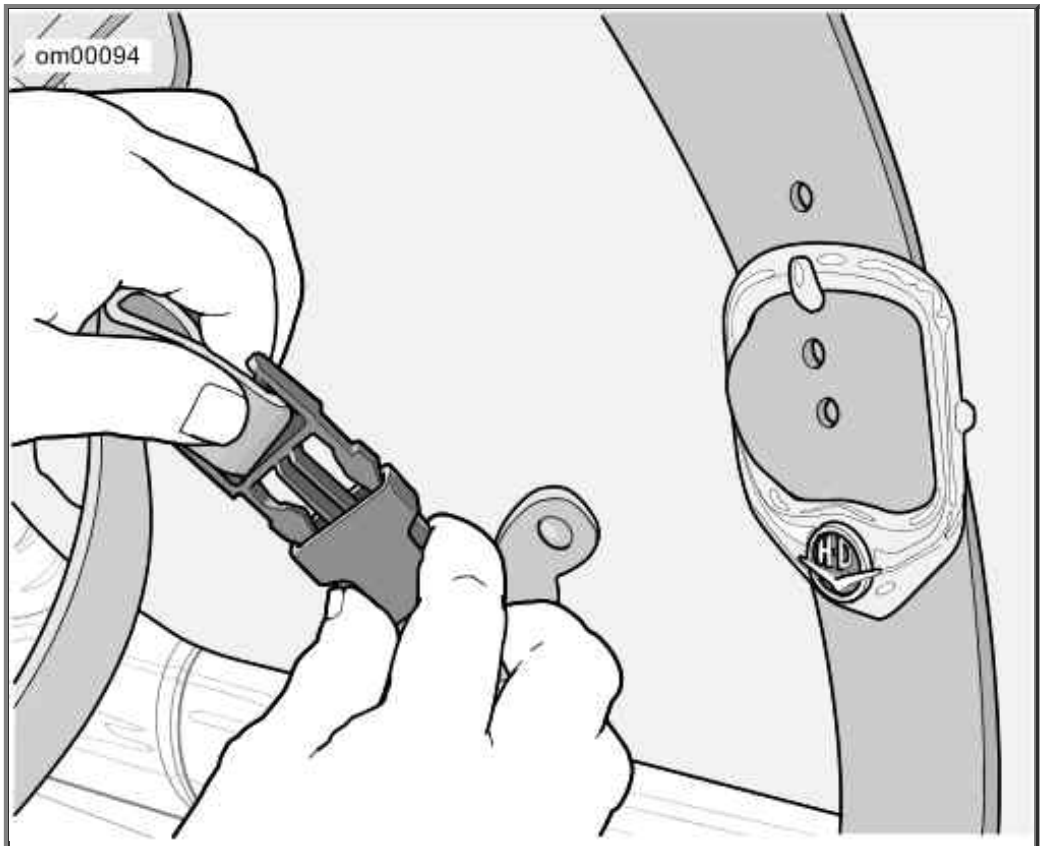

Saddlebag Quick Disconnect

Windshield: FLHR/C

Removal

1. See Windshield: FLHR/C. Insert your fingers into the wire form latch springs at either side of the windshield and move the TOP of the windshield assembly forward, until the TOP bracket notches slide away from the grommets.
2. Carefully lift the windshield bracket BOTTOM notches off the bottom grommets.
3. Remove windshield.

NOTE:

For proper windshield maintenance, see Windshields.

Installation

1. See Windshield: FLHR/C. Insert your fingers into the wire form latch springs at either side of the windshield and slide the BOTTOM windshield bracket notches onto the bottom grommets.
2. Slide the TOP bracket notches onto the top grommets.

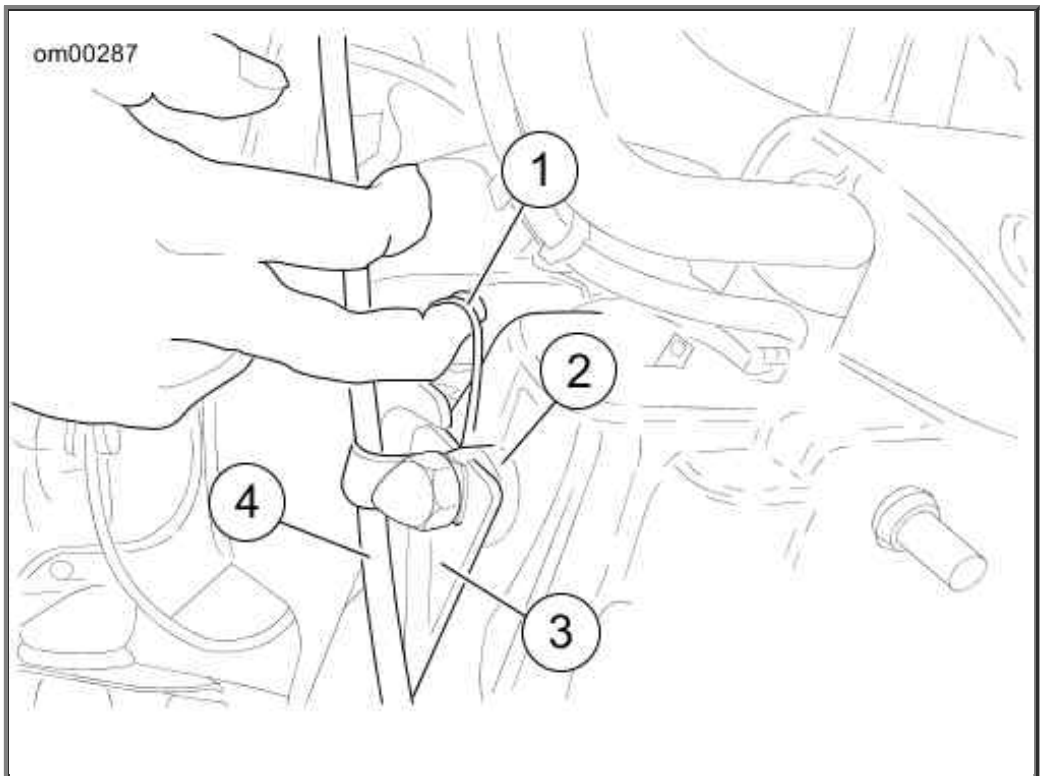

1. Wire form latch spring
2. Grommet
3. Windshield
4. Clutch cable

Windshield: FLHR/C

Adjustable Air Deflectors: FLHTCU

See Adjustable Air Deflector: FLHTCU Models. Air deflectors, located along the left and right bottom edge of fairing, may be adjusted to direct airflow for rider and passenger comfort.

To adjust, grasp the outer edge of the deflector and pivot to desired position.

Adjustable Air Deflector: FLHTCU Models

Cigarette Lighter: FLHX, FLHT/C/U, FLTR

See Cigarette Lighter. FLHX, FLHT/C/U and FLTR models are equipped with a cigarette lighter. The lighter is located on the left side of the fairing. To operate, press lighter into socket. The lighter will pop out when hot.

The lighter is not intended to be used as a power port for electrical devices. Damage to the lighter receptacle may occur.

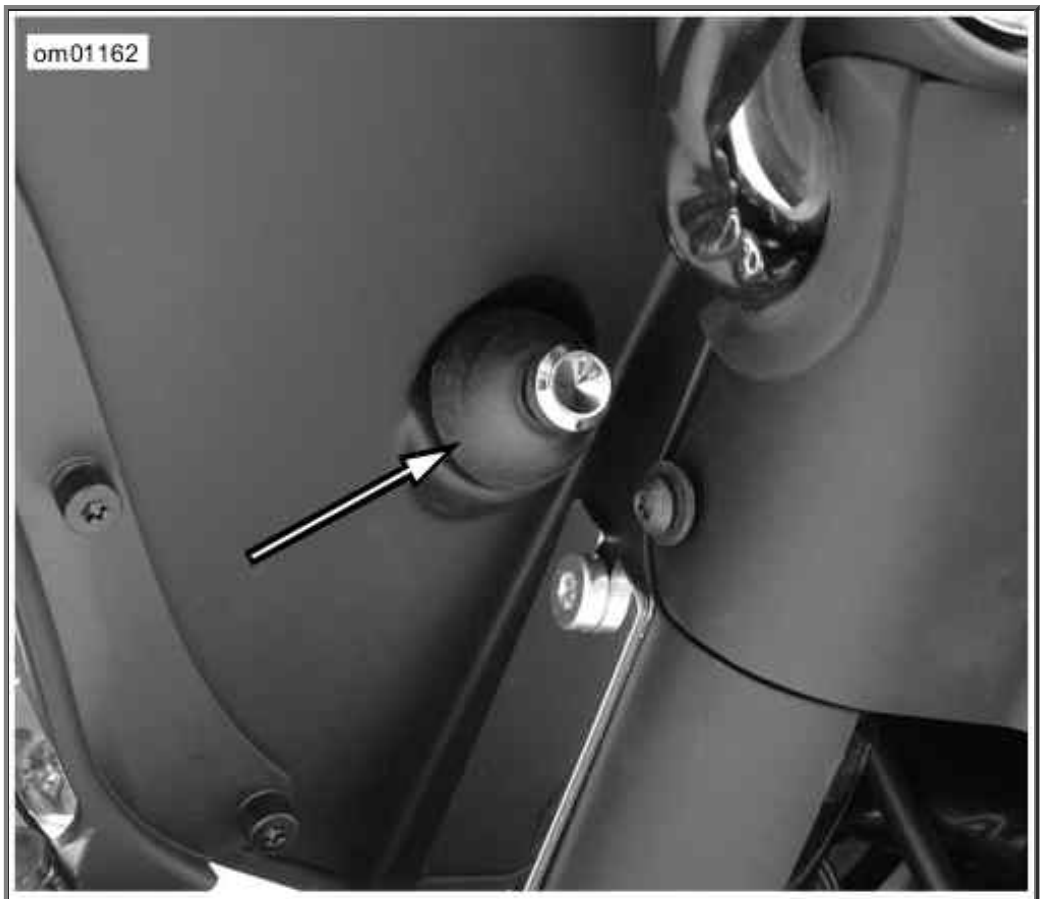

Cigarette Lighter

Accessory Switch

See Switch Indicators. All touring models have an accessory switch (4) for the owner's use. This switch is located on the right side of the fairing (FLHT) or left side triple clamp shroud (FLHR).

See Accessory Connector. There is an accessory connector located in front of the battery that can be activated with the ACC switch. See a Harley-Davidson dealer for possible uses.

CAUTION

It is possible to overload your motorcycle's charging system by adding too many electrical accessories. If your combined electrical accessories operating at any one time consume more electrical current than your vehicle's charging system can produce, the electrical consumption can discharge the battery and cause vehicle electrical system damage. See a Harley-Davidson dealer for advice about the amount of current consumed by additional electrical accessories, or for necessary wiring changes. (00211b)

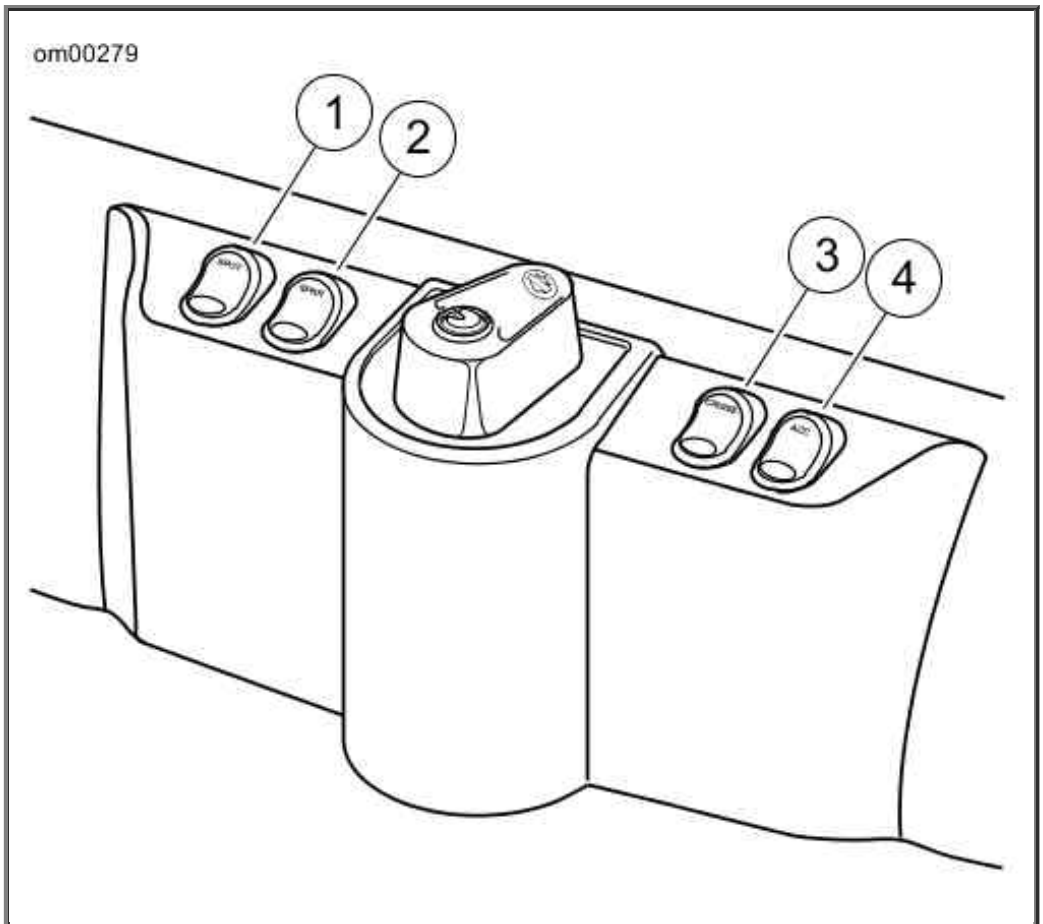

1. Auxiliary (SPOT)
2. Speakers
3. Cruise control
4. ACC switch (ACCESSORY)

Switch Indicators

Accessory Connector

Accessory Connector

Auxiliary Lamps: FLHT and FLHR/C

See Switch Indicators. Use the auxiliary lamp switch (1) to turn ON the auxiliary lamps as required.

NOTES:

- *On the FLHT/C/CU, the auxiliary lamp switch (SPOT) is on the left side of the ignition/headlamp key switch on fairing cap.*
- *On the FLHR/C the auxiliary lamp switch (SPOT) is on the right side of the triple clamp shroud.*
- *The auxiliary lamps (SPOT) do not work when the headlamp is on high beam.*

Fairing Lower Vents: FLHTCU

See Fairing Lower Vent Control. Vents in fairing lowers are controlled by the lever shown. Adjust vent openings to control air flow.

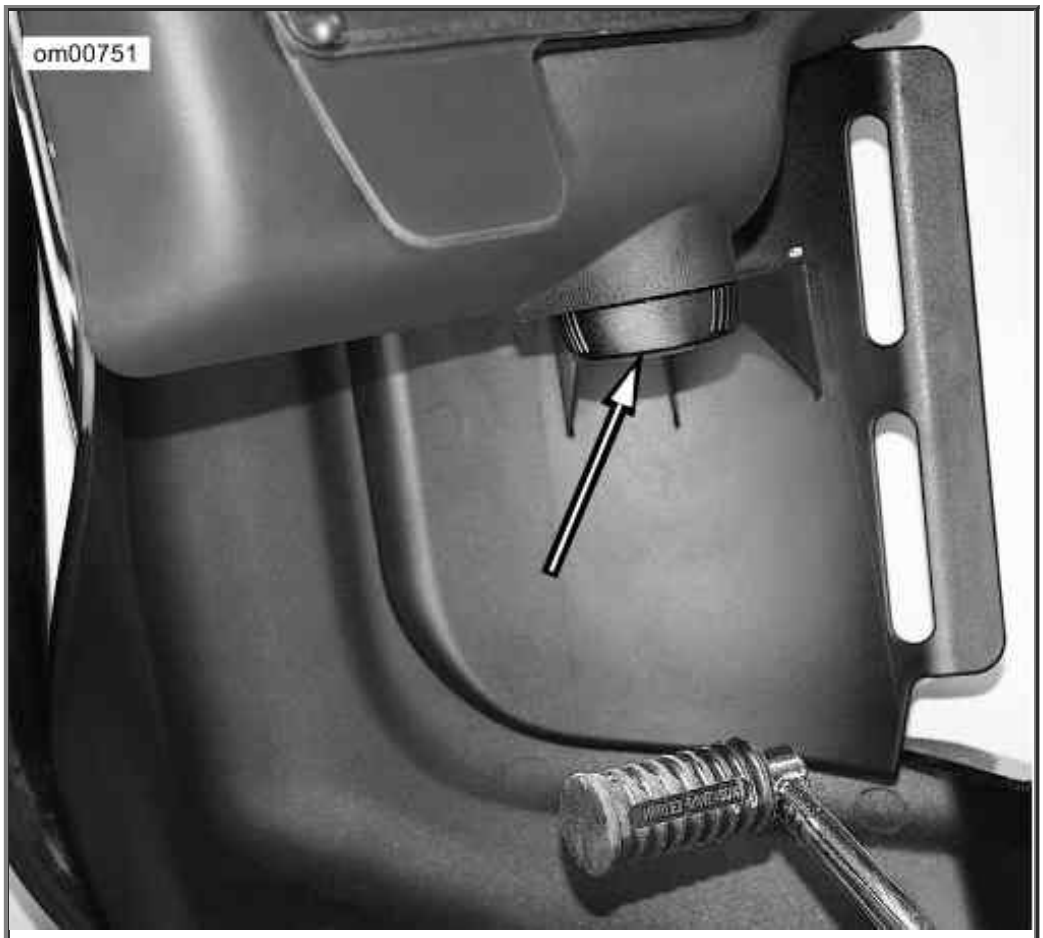

Fairing Lower Vent Control

Rider Footboards

Rider footboards are adjustable. See a Harley-Davidson dealer for adjustment.

Passenger Footboards/Footrests

Passenger footboards/footrests can be adjusted to one of three positions. Before moving to a new position, remove plastic plugs from holes in rear swingarm brackets as necessary.

1. See Passenger Footboards: All Except FLHX Remove socket screw with lockwasher to remove footboard/footrest bracket from rear swingarm bracket.
2. Insert pin on footboard bracket into hole in swingarm bracket at position required.
3. Install socket screw with lockwasher. Tighten socket screw to 15-18 ft-lbs (20-24 Nm).

Passenger Footboards: All Except FLHX

Advanced Audio System

Advanced Audio System

The Advanced Audio System by Harman/Kardon® is based on an electronic unit mounted inside the front fairing of selected Harley-Davidson Touring models.

For FLHX, FLHTC, and FLTR: The Advanced Audio System is a multi-band radio receiver that includes a Compact Disc (CD)/MP3 player and an auxiliary (AUX) port for media players.

The receiver is stereo and plays through left and right speakers mounted in the rider fairing.

For FLHTCU: The Advanced Audio receiver also supports additional passenger speakers, a rider/passenger intercom and a 40 channel Citizen Band (CB) radio transceiver.

⚠WARNING

Do not change compact discs while riding, and do not select a volume level that blocks out traffic noise. Distractions or a volume level that blocks out traffic noise, could cause loss of control resulting in death or serious injury. (00086a)

CAUTION

There are no serviceable parts inside the unit; leave all servicing to qualified service personnel. Disassembly of

the unit could result in equipment damage and/or equipment malfunction. (00172a)

⚠WARNING

Do not disassemble unit. Laser radiation is present if disc player is disassembled and the interlock fails or is defeated. Exposure to laser radiation could lead to death or serious injury. (00087a)

⚠WARNING

Set intercom volume level and other controls before riding to minimize adjustments on the road. Distractions can lead to loss of control, resulting in death or serious injury. (00088a)

Stereo Receiver

The Advanced Audio System stereo receiver is a radio (3 band maximum) with a full function Compact Disc (CD)/MP3 player and an auxiliary (**AUX**) input.

Auxiliary audio devices can play through the receiver's amplifier and speakers when connected to the **AUX** input port. Auxiliary devices include MP3 players, cassette players, and mini-disc players.

Receiver features include:

- Electronic single in-line CD/MP3 player with track up/down, forward and reverse scan, repeat and random play functions.
- CD/CDR/CDRW compatibility. Double-sided CDs will not play in this unit.
- MPEG 2.5 Level III (MP3) file format compatability.
- More than 10 hours of MP3 music - 150 MP3 songs (10 albums) on one 650MB disc.
- Anti-skip protection (>40 second memory and mechanical dampers).
- Remote controls for frequency tuning, band change, CD select, volume, and bass/treble/fader mixing.
- Automatic Volume Control (AVC) - automatically adjusts volume to compensate for ambient noise due to motorcycle speed.
- Time-of-day clock.
- Weather band frequencies displayed as NOAA channel numbers (active on North American units only).

Front Panel Controls

See Advanced Audio System Front Panel. The front panel consists of a set of pushbuttons, a liquid crystal display, (LCD), a protective door for the Compact Disc (CD/MP3) slot and a covered input port for auxiliary (AUX) players. Six of the pushbuttons are "soft keys" whose function will change with the display.

ON

Press **ON** to turn the receiver on and off.

1, 2, 3, 4, 5/Left Arrow

For the stereo receiver, the soft keys, **1, 2, 3, 4, and 5/Left Arrow**, are used to store and then recall a selected radio frequency (pre-sets). When combined with any of the Advanced Audio System accessories, the function of any active soft key for that accessory will be displayed next to the soft key in the LCD display.

6

Pressing the **6** soft key will return the display to the previous menu. For **CB** and **Intercom Setup**, the function of the **6** soft key will be displayed in the LCD next to the **6** soft key.

5/Left, Up, Down, Right Arrows

The **5/Left, Up, Down,** and **Right Arrow** soft keys are used for radio band frequency tuning, Bass and Treble mixing, Fader and Volume. They are also used to scroll and highlight a selection in a list. For an Advanced Audio System accessory module, the arrow keys are active when arrows appear in the display.

OK

With a menu or list item highlighted, press the **OK** pushbutton to confirm the selection and initiate the function.

COM

Active on the FLHTCU or on motorcycles equipped the Advanced Audio System CB accessory, **COM** is the Citizen Band (CB) setup button. See CB Operation. Press the **COM** pushbutton to display the CB Setup menu.

INT

Active only on the FLHTCU, **INT** is the intercom setup button. See Intercom Operation. Press the **INT** pushbutton to display the Intercom Setup menu.

NOTE:

With the headsets/microphones plugged into the rider and/or passenger intercom sockets, the intercom is voice activated (VOX).

NAV

Active only with the Advanced Audio System accessory, **NAV** is the GPS positioning and turn-to-turn navigation setup button. Press the **NAV** pushbutton to display the navigational menu.

LCD

The liquid crystal display (LCD) displays the operational status of the stereo receiver and that of any accessory.

CD Door

The CD door is a spring-loaded cover and will stay open when exchanging CDs.

Close the CD door after loading or unloading a CD. To close the door, push the door down until it latches.

EJECT

The CD **EJECT** button is found under the CD cover. Press the **EJECT** pushbutton to eject the CD.

AUX

The auxiliary input port under the **AUX** cover connects the receiver to an auxiliary device such as a cassette or MP3 player.

Use a 1/8 in. (3.5 millimeter) male to male extension cord to plug the line out or headset out from the auxiliary device into the **AUX** port. AUX appears in the LCD as a mode selectable with the **MODE SEL** switch.

The user has control of Bass, Treble, Fader and Volume, if so equipped, but all other player functions are performed with the auxiliary device. Set the volume level of the **AUX** device to normal or average.

NOTE:

*Close the protective cap whenever the **AUX** port is not in use.*

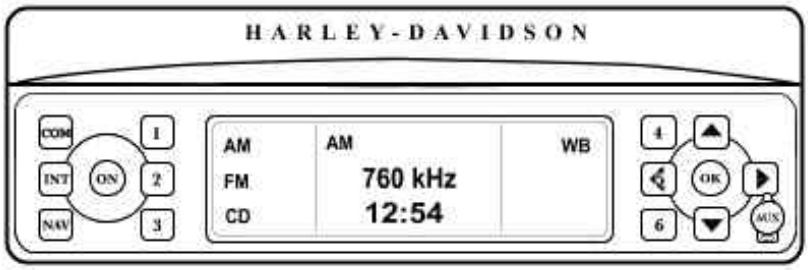

1. Communications (CB) setup
2. CD cover
3. EJECT (under cover)
4. OK (Confirm)
5. Auxiliary connector cover
6. Left (5), Up, Right, Down Arrow Keys
7. Soft keys (4, 5/Left Arrow, 6)
8. Liquid crystal display (LCD)
9. Soft keys (1, 2, 3)
10. ON key
11. GPS navigation module
12. Intercom setup

Advanced Audio System Front Panel

Left Handlebar Controls

See LH Audio Controls: FLHTC, FLHX Upper - FLHTCU, FLTR Lower. Easy to operate while riding, audio controls are mounted on the left hand switch housing on the left handgrip.

For FLHX and FLHTC: The left hand audio control is an **+/AUDIO/-** switch.

For FLHTCU and FLTR: The left hand audio controls are a **+/AUDIO/-** and a **PTT +/SQ/-** switch. On FLTR models, the **PTT +/SQ/-** switch is inactive.

+/AUDIO/- Switch

AUDIO: See LH Audio Controls: FLHTC, FLHX Upper - FLHTCU, FLTR Lower. Press the **AUDIO** switch to access the Audio/Setup menu on the LCD. Press and release **AUDIO** or the press the soft key to toggle to the next displayed function in sequence from Bass, to Treble, to Fade, to Display, to Volume and then to to AVC.

If the **AUDIO** switch is left on any selection the function automatically reverts back to the selected mode after approximately 2-3 seconds.

±: Pressing the **AUDIO** switch upward (**+**) raises the level for the currently selected Audio/Setup (Bass, Treble, Fade, Volume or AVC). Pressing the switch downward (**-**) lowers the level. The level is raised or lowered as long as the switch is held until the minimum or maximum level is reached.

The LCD displays a horizontal dashed line to indicate the level. In the center of the line is a single thin dash. When the level is at the center, the selected audio is at a mid-point of its range.

The Fade function is only available on FLHTCU models. See C in Display Examples. Fade adjusts the balance between rider and passenger speakers. Pressing **AUDIO** upward (**+**) moves the balance to the front speakers while pressing **AUDIO** downward (**-**) moves the balance to the rear speakers. Equal volume in front and rear speakers is indicated by one horizontal single line in the center position.

The Display function sets the illumination level of the characters in the LCD display.

The AVC (Automatic Volume Control) function sets the volume level to compensate for the ambient noise associated with motorcycle speed.

PTT and +/SQ/- Switch

See LH Audio Controls: FLHTC, FLHX Upper - FLHTCU, FLTR Lower. Push-To-Talk (**PTT**) and the squelch control switch (**+/SQ/-**) is located on the left handlebar switch assembly.

NOTE:

*The **PTT** and **+/SQ/-** is found on the FLHTCU Ultra Classic and the FLTR Road Glide models. On the FLTR, this switch is inoperative unless the optional Intercom and Citizen Band transceiver is installed.*

PTT: With the power ON and the LCD indicating CB is active, press and hold the **PTT** switch to transmit over the channel displayed. Release **PTT** to end transmission.

+/SQ/-: Lower the threshold to allow reception of CB signals by pressing the **+/SQ/-** switch toward the rear (**-**) or raise the threshold by pressing the **+/SQ/-** switch toward the front (**+**).

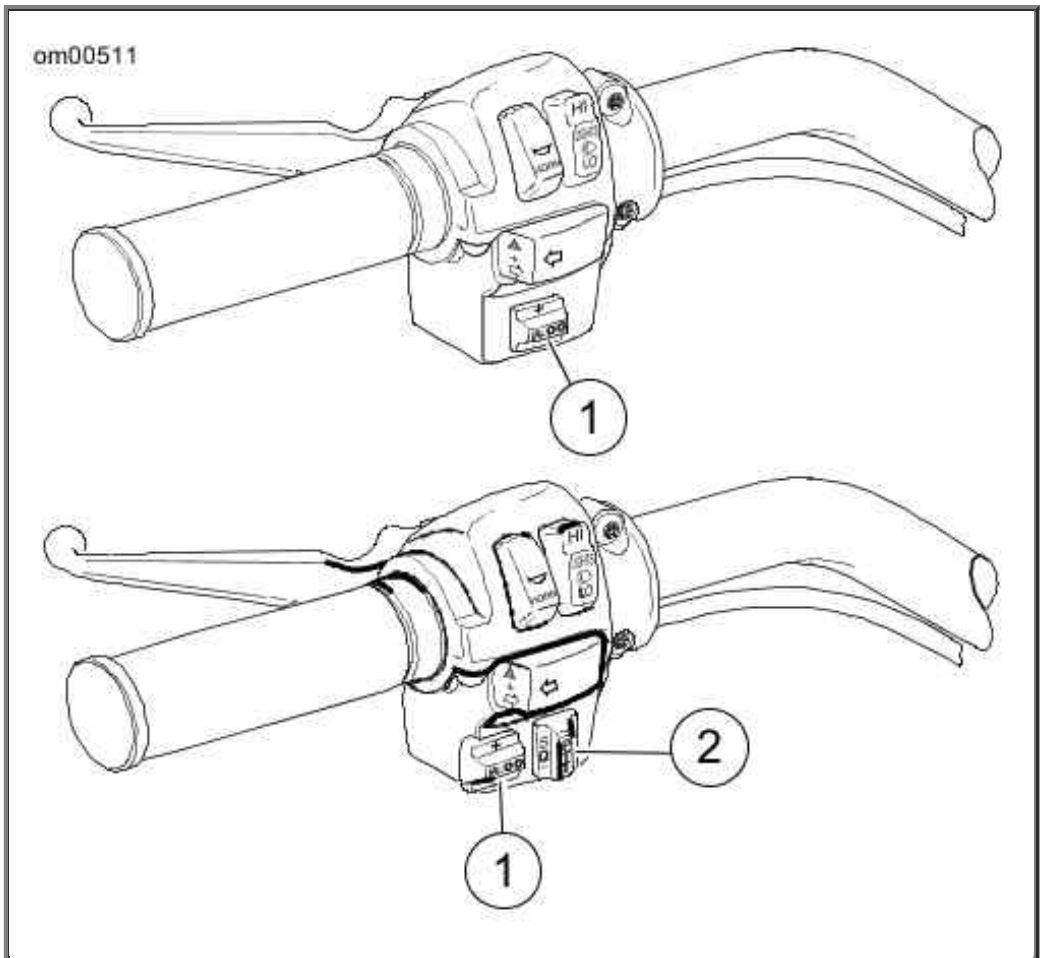

1. +/AUDIO/-
2. PTT / +/SQ/-

LH Audio Controls: FLHTC, FLHX Upper - FLHTCU, FLTR Lower

Right Handlebar Controls

See RH Audio Controls: FLHTC, FLHX (Upper) - FLHTCU, FLTR (Lower). The mode select (**MODE SEL**) switch is located on the right handlebar switch assembly.

UP/MODE SEL/DN Switch

MODE SEL

With the radio power ON, press and release the **MODE SEL** switch to sequence between the radio bands.

When a audio CD/MP3 disc is inserted into the CD player the **CD** function is added to the selections. When a 1/8 in. (3.5 mm) connector is plugged into the **AUX** input port the AUX function is added to the selections.

The LCD display indicates the function selected.

UP/DN

In the receiver mode: **UP/DN** allows up or down radio station SEEK tuning.

In CD/MP3 mode: **UP/DN** changes tracks and performs fast advance and fast reverse.

In the CB mode: **UP/DN** changes the CB channel.

In the Intercom mode: **UP/DN** changes the voice activated microphone (VOX) sensitivity.

In the AUX mode: The **UP/DN** switch is inactive.

For a detailed description of the various modes, see Receiver Operation.

Receiver Frequency Bands

MARKET	BAND	FREQUENCY	STEPS
Domestic	AM	530-1700 kHz	10 kHz
	FM	87.75-107.9 MHz	200 kHz
	WB	162.400-162.550 MHz	25 kHz
International	LW	144-279 kHz	3 kHz
	MW	531-1611 MHz	9 kHz
	FM	87.5-108 MHz	100 kHz
Japanese	MW	522-1629 MHz	9 kHz
	FM	76.0-91.0 MHz	100 kHz

NOTE:

The intercom and CB can be activated at the same time with the receiver modes. The intercom and CB signals are passed to the audio circuits only if the signal strength exceeds the threshold established by CB squelch or VOX microphone sensitivity levels. Depending on the position of the speaker control switch in the fairing switch cap, the receiver function, the CB, and the VOX microphone can be heard in the headsets simultaneously. See Intercom Operation and CB Operation.

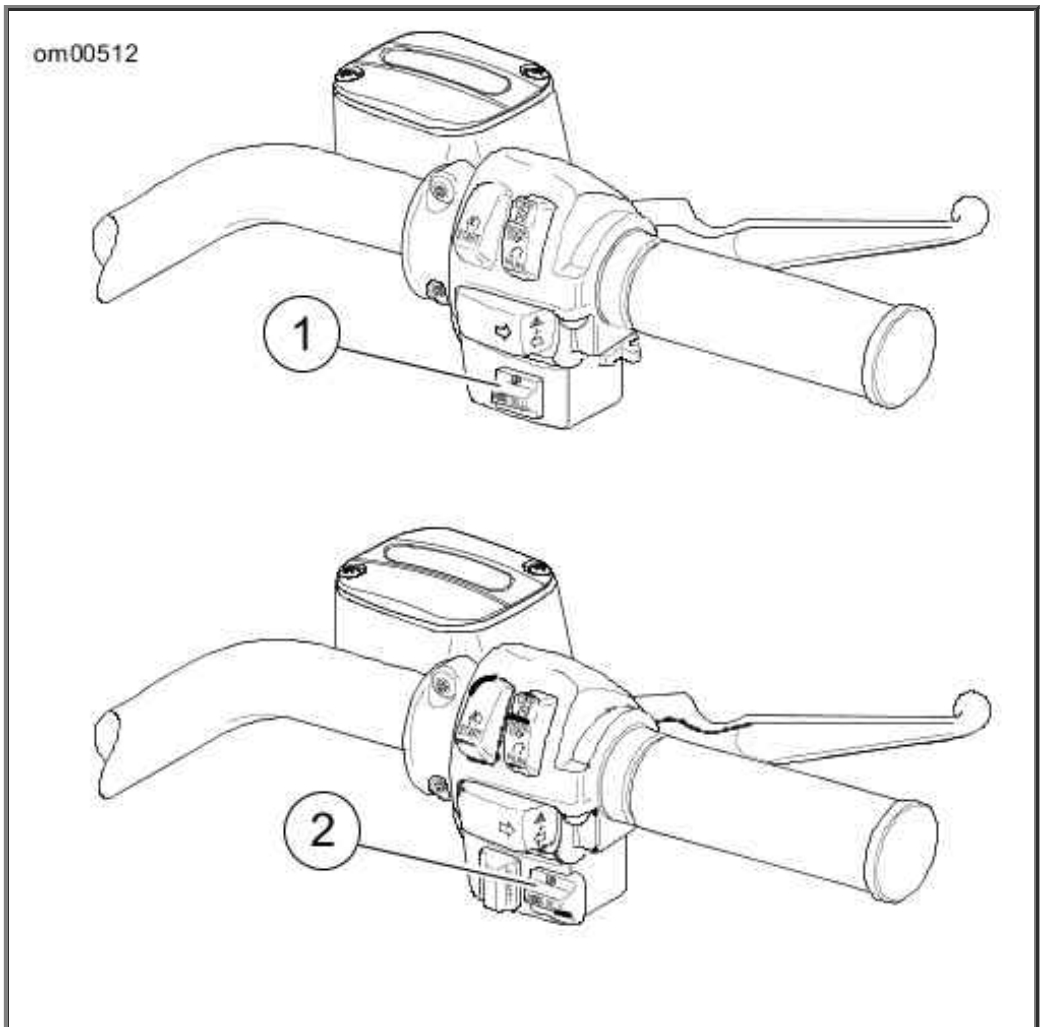

1. UP/MODE SEL/DN
2. UP/MODE SEL/DN

RH Audio Controls: FLHTC, FLHX (Upper) - FLHTCU, FLTR (Lower)

Receiver Operation

See Advanced Audio System Front Panel for a picture of the stereo receiver front panel.

Set Time-of-Day

Set the time-of-day with the Ignition/headlamp Key Switch turned to **IGNITION** or **ACCESS** but with the stereo receiver OFF.

Press the Set soft key (**6**) (Set) on the front panel to display the time setup menu.

See A in FLHX, FLHTC and FLTR LCD Display Examples. To increase the hours in the display press the Hrs+ soft key. To decrease hours press the Hrs- soft key. When the hour is correct, release the soft key.

To increase the minutes in the display press the Min+ soft key. To decrease minutes press the Min- soft key. When the minute is correct, release the soft key.

Turn Receiver ON/OFF

To turn the receiver ON, turn the Ignition/headlamp Key Switch to **IGNITION** or **ACCESS** and press the **ON** button on the front panel. To turn the receiver OFF, press the **ON** button.

If the receiver is ON when the ignition is turned OFF, the receiver will power up when the Ignition/headlamp Key Switch is turned to **IGNITION**.

Select a Frequency Band

Using the right thumb, press the **MODE SEL** switch on the right hand grip and release to cycle to the desired frequency band (mode) or press the soft key next to the frequency band displayed in the LCD to select a frequency band.

See B in FLHX, FLHTC and FLTR LCD Display Examples. The LCD highlights the selected band.

NOTE:

*Refer to Receiver Frequency Bands. When a CD/MP3 disc is present in the CD slot and/or an auxiliary player is plugged into the AUX port, the **MODE SEL** switch will cycle through the CD and AUX modes as well as the frequency bands.*

Volume

See D in FLHX, FLHTC and FLTR LCD Display Examples. At any time the receiver is playing, the volume can be adjusted by pressing the **AUDIO** switch up (**+**) to increase volume or down (**-**) to decrease volume.

AM vs FM Reception

Commercial radio broadcasting is either AM (Amplitude Modulation) or FM (Frequency Modulation).

AM

AM radio waves reflect off the ionosphere which results in consistent signal reception at a long range (up to 100 miles or 160 kilometers).

However, AM radio can be displaced by loud humming, popping and crackling noises. This is electrical interference caused by noise from vehicle ignitions, electric signs, power lines and electrical storms.

FM

The advantages of FM radio are high fidelity sound, stereo reception, a wide range of broadcasting formats, and a signal that is free of electrical interference.

The disadvantage of FM radio is its short range. FM radio waves travel in straight lines, called "line-of-sight," therefore, FM signals cannot be received over the horizon. At the limit of a station's range, the reception may fade in and out when objects pass between the transmitter and the

motorcycle.

FM Stereo vs FM Mono

See E in FLHX, FLHTC and FLTR LCD Display Examples. Normally, the Advanced Audio System plays FM signals in stereo. The LCD will indicate **STEREO**.

However, the stereo receiver has circuits which eliminate or minimize FM flutter due to weak stereo signals. The circuits detect a weak FM stereo signal and automatically blend it into a stronger FM mono signal. The transition is smooth and flutter free because it occurs over a range of signal conditions, rather than at a minimum threshold.

When the system is automatically blending or is receiving an FM mono signal, the stereo indicator (**STEREO**) will disappear from LCD screen.

WB

See H in FLHX, FLHTC and FLTR LCD Display Examples. Broadcast by the National Oceanic and Atmospheric Administration (NOAA) National Weather Band (WB) frequencies are available in North America only.

To receive NOAA weather alerts while listening to other radio bands, highlight the Alert indicator in the WB display by pressing the soft key. An alert tone will automatically switch the receiver to the announcing WB channel regardless of which frequency band is playing.

When equipped with the CB module, use the soft key to highlight the Alert indicator in the LCD display. Weather alerts are announced over other audio and the **Alert** indicator is highlighted in the display.

Tuning-in a Radio Station

The radio has several tuning modes in each of the frequency bands: Manual, Seek, Scan, Preset Memory and Preset Scan.

Tuning in all three modes continuously wraps around the ends of the band.

Manual Tuning

To manually tune the radio to a different frequency:

Press the **Up Arrow** button or the **Down Arrow** button to select the frequency in that direction. Hold the selected arrow button, and after a short delay of 1.5 seconds, the radio will continue to change frequencies until the selected arrow button is released.

SEEK Tuning

See E in FLHX, FLHTC and FLTR LCD Display Examples. In SEEK, the radio tunes in to the next strong station.

Press and release the **MODE SEL** switch up (**UP**) to tune in the next strong station upward in the band. Press and release the switch down (**DN**) to tune in the next strong station downward in the band.

NOTE:

The SEEK icon appears in the display as long as the receiver is seeking the next strong frequency. The SEEK icon disappears as soon as the receiver has tuned in the next station.

SCAN Tuning

In SCAN, the radio continuously tunes from one strong station to the next until the SCAN is cancelled.

See F in FLHX, FLHTC and FLTR LCD Display Examples. Press and hold the **MODE SEL** switch **UP** or **DN** approximately 5 seconds to scan the band for strong station signals. Each strong station remains tuned in for 8 seconds before the radio scans to the next station. The receiver will continue to scan until cancelled.

To select a station, cancel SCAN while the radio is tuned to that station. Press the **MODE SEL** switch **UP** or **DN** to cancel a SCAN moving up the band.

Preset Memory Tuning

Use the soft keys, **1, 2, 3, 4,** and **5/Left Arrow** as preset buttons to store frequently tuned stations.

NOTE:

See C in FLHX, FLHTC and FLTR LCD Display Examples. AM can store 6 preset frequencies.

*See E and F in FLHX, FLHTC and FLTR LCD Display Examples. Separate FM1 and FM2 bands allow the rider to store 2 sets of 5 preset FM frequencies (10 total). Use the **More** soft key to toggle between FM1 and FM2. The full range of FM frequencies can be selected in either FM1 or FM2.*

To store a current station, press and hold any one of the preset buttons for 1.5 seconds. After an audible signal (a chirp), the station's frequency has been stored and the frequency will appear in the display next to the preset soft key.

To tune to a stored station, press and release the preset soft key.

Preset SCAN Tuning

See G in FLHX, FLHTC and FLTR LCD Display Examples. In preset SCAN, the radio continuously tunes from one preset station to the next until the preset SCAN is cancelled. A P.SC icon will display while preset SCAN is active.

In the FM band, press and hold the More soft key for approximately 3 seconds. Each preset station remains tuned in for 10 seconds before the radio moves to the next station.

To select a station, cancel preset SCAN while the radio is tuned to that station. Press the **MODE SEL** switch **UP** or **DN** to cancel a preset SCAN.

Adjusting Volume

Volume can be adjusted in any radio band.

See D in FLHX, FLHTC and FLTR LCD Display Examples. Volume is adjusted with the **AUDIO** switch on the left hand grip. Using left thumb, press the **AUDIO** switch up (**+**) to raise the volume or down (**-**) to lower the volume. The LCD displays the word Volume and a bar graph that changes length with the volume.

Press the **MODE SEL UP** or **DN** to cancel the Audio/Setup display or wait 5 seconds after the **AUDIO** switch is released, the display switches to the currently selected frequency band.

See K in FLHX, FLHTC and FLTR LCD Display Examples. Volume can also be adjusted in Audio/Setup.

Press and release the **AUDIO** switch to enter the Audio/Setup display. Press and release the **AUDIO** switch to cycle through Bass, Treble, Fade and Display to Volume and the **AUDIO** switch to raise (**+**) or lower (**-**) the volume.

Mixing Bass and Treble

Bass and treble range adjustments can be applied to any Advanced Audio System source.

BASS: See I in FLHX, FLHTC and FLTR LCD Display Examples. Press **AUDIO** to display Bass Audio/Setup. Using the left thumb, press the **AUDIO** switch up (**+**) to increase the bass range or down (**-**) to lower the bass range. The LCD displays the word Bass and a dashed line that changes length with the setting. The short center dash indicates a middle setting.

TREBLE: See J in FLHX, FLHTC and FLTR LCD Display Examples. From Bass Audio/Setup, press and release **AUDIO** to sequence to Treble. Using the left thumb, press the **AUDIO** switch up (**+**) to increase the treble range or down (**-**) to lower the treble range.

See J in FLHX, FLHTC and FLTR LCD Display Examples. The LCD displays the word Treble and a bar graph that changes length with the setting. The short center dash indicates a middle setting.

Adjusting AVC

See L in FLHX, FLHTC and FLTR LCD Display Examples. Automatic Volume Control (AVC) automatically adjusts volume level to compensate for ambient noise associated with motorcycle speed.

If the AVC does not adequately compensate for ambient noise (or if it over compensates), enter the audio setup menu and select AVC. Compensation is adjusted with the **AUDIO** switch on the left hand grip. Using left thumb, press the **AUDIO** switch up (**+**) to raise the compensation level or down (**-**) to lower the compensation.

NOTE:

Although the receiver AVC is preset at 3 bars, it is adjustable from 0 bars (OFF) to 4 bars. At 1 bar, the volume does not change with motorcycle speed. The more bars displayed, the higher the volume increases with speed.

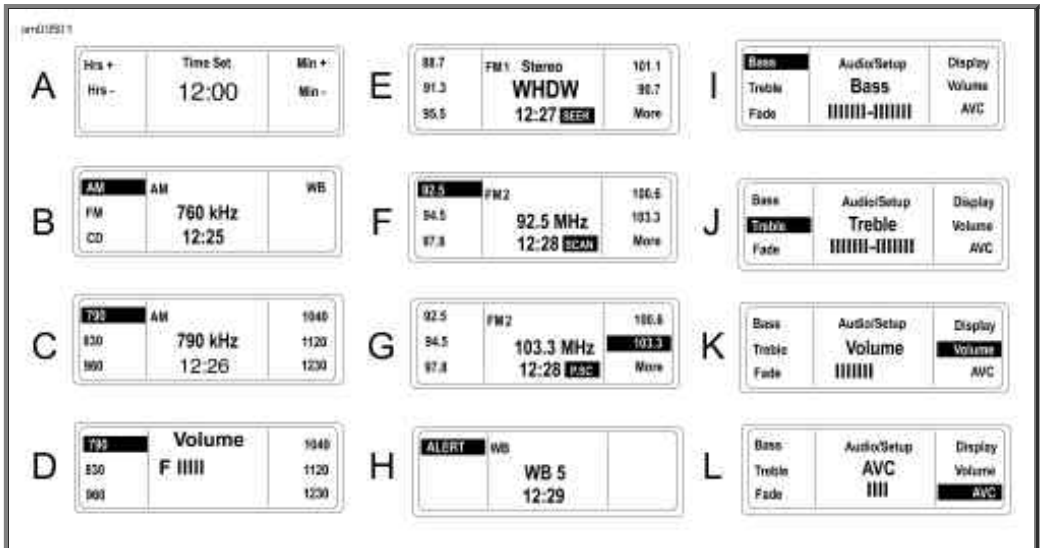

FLHX, FLHTC and FLTR LCD Display Examples

Adjusting Display Contrast

See Character Display Illumination. Select Display from the Audio/Setup menu with the **AUDIO** switch. Press the **AUDIO** up (**+**) to increase or down (**-**) to decrease the contrast of the characters in the display.

NOTE:

The contrast can be decreased to render the characters invisible against the background. The characters will appear to have disappeared in the display. Before leaving the Display screen, always increase the character illumination to make the characters visible in other modes.

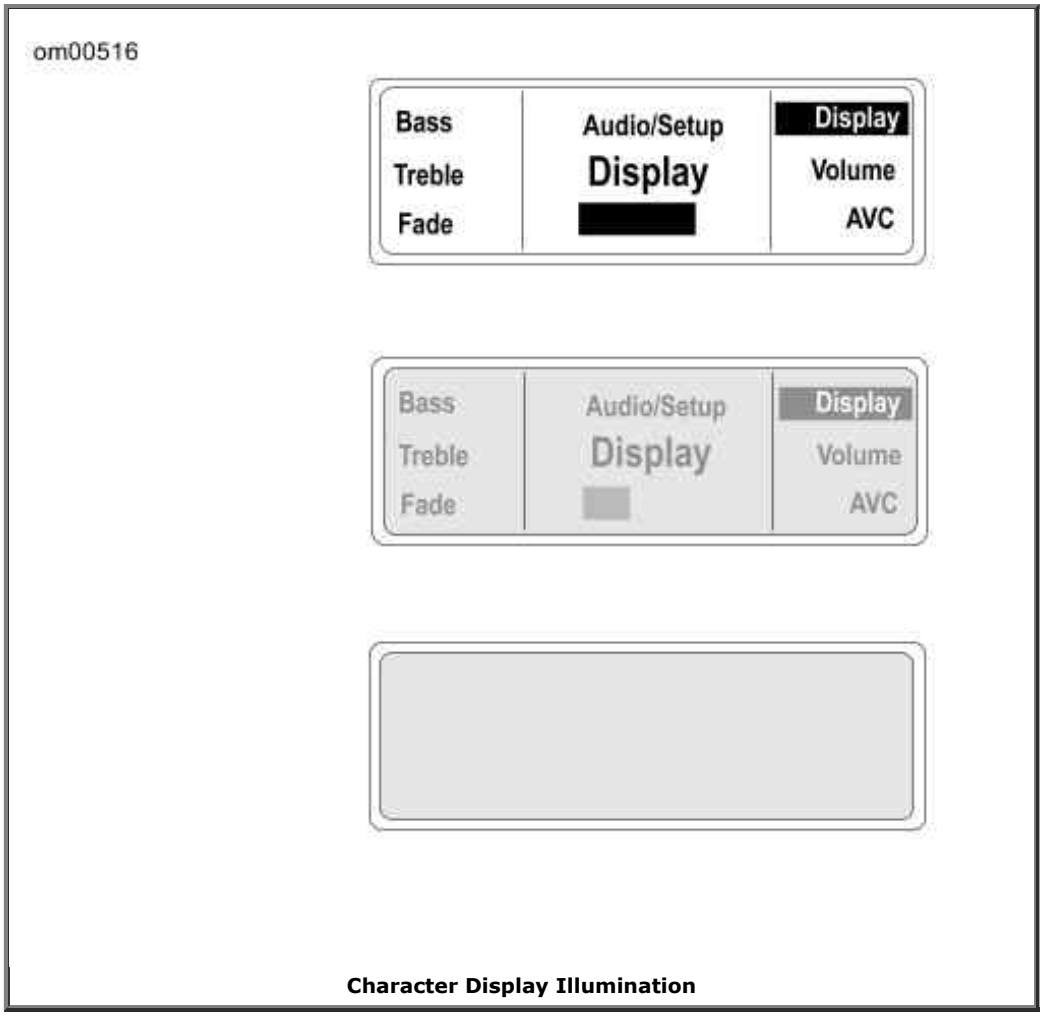

Character Display Illumination

CD/MP3 Operation

The CD player will accept commercial audio discs as well as compact discs recorded with MP3 (MPEG 2.5 Level III), files on compact disc read only (CDR) or compact disc read and write (CDRW) formats.

CAUTION

There are no serviceable parts inside the unit; leave all servicing to qualified service personnel. Disassembly of the unit could result in equipment damage and/or equipment malfunction. (00172a)

⚠WARNING

Do not change compact discs while riding, and do not select a volume level that blocks out traffic noise. Distractions or a volume level that blocks out traffic noise, could cause loss of control resulting in death or serious injury. (00086a)

⚠WARNING

Do not disassemble unit. Laser radiation is present if disc

player is disassembled and the interlock fails or is defeated. Exposure to laser radiation could lead to death or serious injury. (00087a)

Auto Load

With the receiver power ON, raise the CD door and gently insert a CD, label side up, into the CD slot until the unit automatically pulls the CD into the player. Close the CD door.

NOTE:

Do not use double sided CDs in the Advanced Audio stereo receiver. Double sided CDs may become permanently lodged in the player.

See C in CD/MP3 Display Examples. The receiver will automatically switch to CD operation. The CD track number and play time will appear in the LCD display. With a CD in the player, CD is added to the modes selectable with the **MODE SEL** switch.

⚠WARNING

Set intercom volume level and other controls before riding to minimize adjustments on the road. Distractions can lead to loss of control, resulting in death or serious injury. (00088a)

Disc Error 1

See B in CD/MP3 Display Examples. If the CD loaded into the CD player is damaged, of incorrect format, or if upside down, the LCD will display the Disc Error 1 message.

Eject the CD. Refer to Recommendations for Handling CDs.

Eject

⚠WARNING

Do not change compact discs while riding, and do not select a volume level that blocks out traffic noise. Distractions or a volume level that blocks out traffic noise, could cause loss of control resulting in death or serious injury. (00086a)

Press the **EJECT** button found under the CD door to eject a CD. The CD will be partially ejected. Remove the CD. Close and latch the CD door.

The receiver will automatically return to the radio band and frequency playing when the CD was loaded and the CD mode is no longer selectable.

Tracks

To change CD/MP3 tracks, use the right thumb and press and release the **MODE SEL** switch on the right hand grip. Press **UP** and release to select higher numbered tracks or press **DN** and release to select lower number tracks.

Pressing the **Up Arrow** and **Down Arrow** keys will also advance tracks.

NOTE:

The player automatically numbers the MP3 files found on a CD in alphabetical order.

NOTE:

*If the **MODE SEL** switch is pressed and held **UP** or **DN** longer than 1.5 seconds, the track selections will fast advance or reverse as long as the switch is held.*

CD track selection wraps around the first and last track.

Fast Advance and Reverse

To fast advance a track, press the **MODE SEL** switch **UP** and hold longer than 1.5 seconds. The current track will fast advance while the switch is pressed **UP**. The audio will advance to the subsequent track as long as the switch is held **UP**.

See D in CD/MP3 Display Examples. The play time display in the LCD will also fast advance.

To fast reverse a track, press **MODE SEL DN** and hold longer than 1.5 seconds. The current track will fast reverse while the switch is pressed **DN**.

The play time display in the LCD will also fast reverse.

Random

To play tracks randomly, press the Random soft key on the front panel while in the CD mode. The word Random will remain highlighted in the display. No selection is repeated until all other selections have been played.

NOTE:

*The Random soft key toggles between normal and Random play. Press once for random play. Press a second time to return to normal play. Pressing the **MODE SEL** switch **UP** or **DN** will select different tracks at random.*

See D in CD/MP3 Display Examples. Random will be highlighted in the display.

Scan

To scan the tracks on an CD/MP3 disk, press the Scan soft key.

NOTE:

The tracks will play for 8 seconds and then jump to the next track which will play for 8 seconds.

Upon selecting a track, press and release the **MODE SEL** switch to continue playing that track.

Repeat

To repeat a CD track while it is playing, press the soft key next to the Repeat display.

To cancel Repeat, press the Repeat soft key again or press the **MODE SEL** switch **UP** or **DN** to change tracks.

Repeat will no longer be highlighted in the display.

MP3

The receiver CD player will automatically recognize and play MP3 files.

NOTE:

The files will be numbered sequentially.

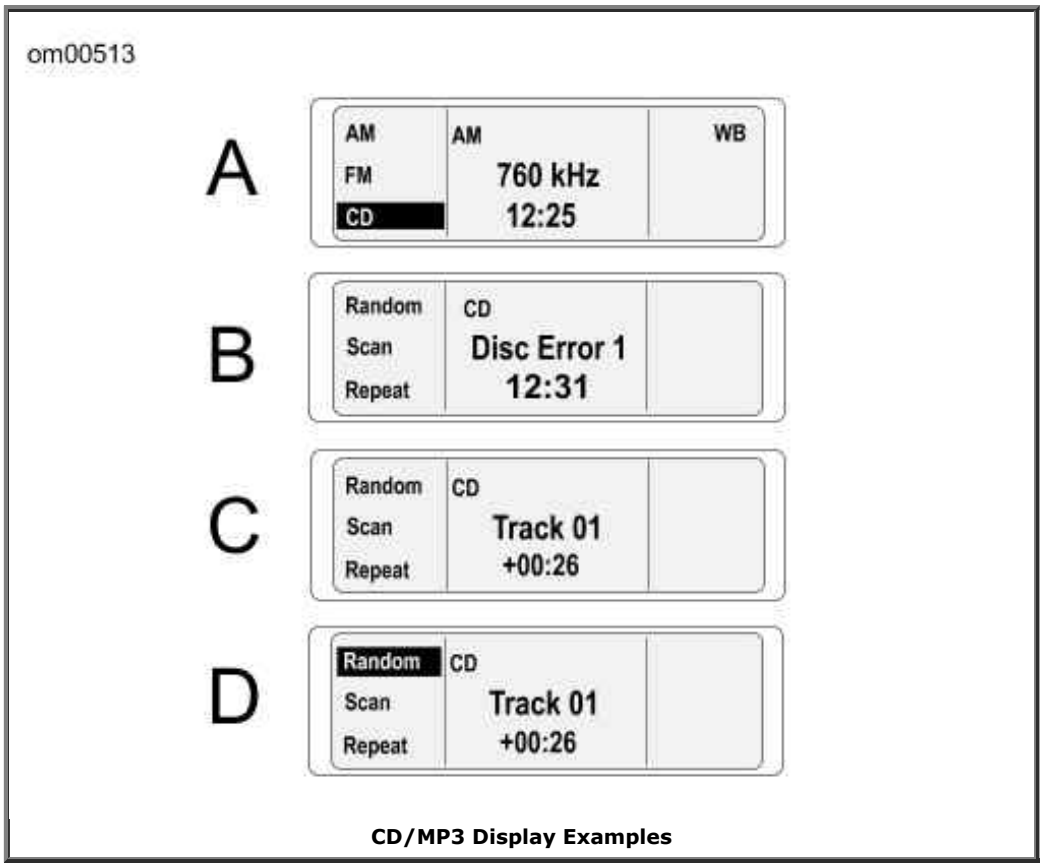

CD/MP3 Display Examples

Recommendations for Handling CDs

- Use caution when handling a CD. Avoid touching the bottom (shiny) side.
- Store audio CD/MP3 discs in acrylic jewel cases to protect against dust, scratches, light, and changes in humidity.
- Store CDs in a cool dry place away from direct sunlight.
- Use commercially available cleaning tissue to clean the CDs. Never use solvents that can damage the CD.
- Keep protective CD door closed at all times.

⚠WARNING

Do not disassemble unit. Laser radiation is present if disc player is disassembled and the interlock fails or is defeated. Exposure to laser radiation could lead to death or serious injury. (00087a)

NOTE:

A laser that cannot focus properly may cause skipping. A clouded lens can be caused by dirty CDs, dust, smoke, high humidity, and airborne particles may cause the laser lens to cloud. Operating the CD without allowing the motorcycle to warm up can also cause a CD to skip.

Intercom and Citizen Band with Passenger Speakers

The FLHTCU supports includes a digitally tuned 40 channel Citizen Band (CB) transceiver, a rider/passenger intercom.

Features include:

- Rider headset connector on fuel tank console.
- Passenger headset connector on backrest.
- Handlebar mounted rider push to talk (**PTT/+/SQ/-**) switch (CB and Intercom).
- Fairing-mounted speaker switch.
- Rear-mounted passenger **UP/MODE SEL/DN** and **PTT/+/VOL/-** switches (CB and Intercom).
- Digitally adjustable rear headset speaker volume.
- Passenger receiver band switching and frequency tuning.
- Passenger CD/MP3 player control.
- Rider hand-held microphone compatibility for areas that prohibit headset (helmet-mounted) speakers.

Headsets and Sockets

CAUTION

Some local governments prohibit or restrict the use of headset (helmet-mounted) speakers. Please check with local authorities and obey all applicable laws and regulations. (00173a)

A Harley-Davidson dealer can help you select the correct genuine Harley-Davidson headsets and microphones for your year and model Harley-Davidson. Harley-Davidson stereo helmet headsets with 7 pin DIN jacks fit the rider and the passenger intercom sockets. Other headset microphones will not work.

Open the socket cap and with the ridge on the headset jack facing upward and insert the jack into either the front or rear headset socket.

NOTE:

For areas that do not permit headset speakers, a special hand-held microphone can be used to transmit over the CB. This microphone is also available through a Harley-Davidson dealer.

CAUTION

Do not pull on the cord to remove the headset from the socket. Pull on the headset jack to disconnect the headset from the socket. (00174a)

The spring loaded hinge keeps the headset socket cap closed while riding. It protects against dirt and water when the headset or hand-held microphone is not in use. Before washing the motorcycle, verify that **BOTH** rider and passenger socket caps are closed.

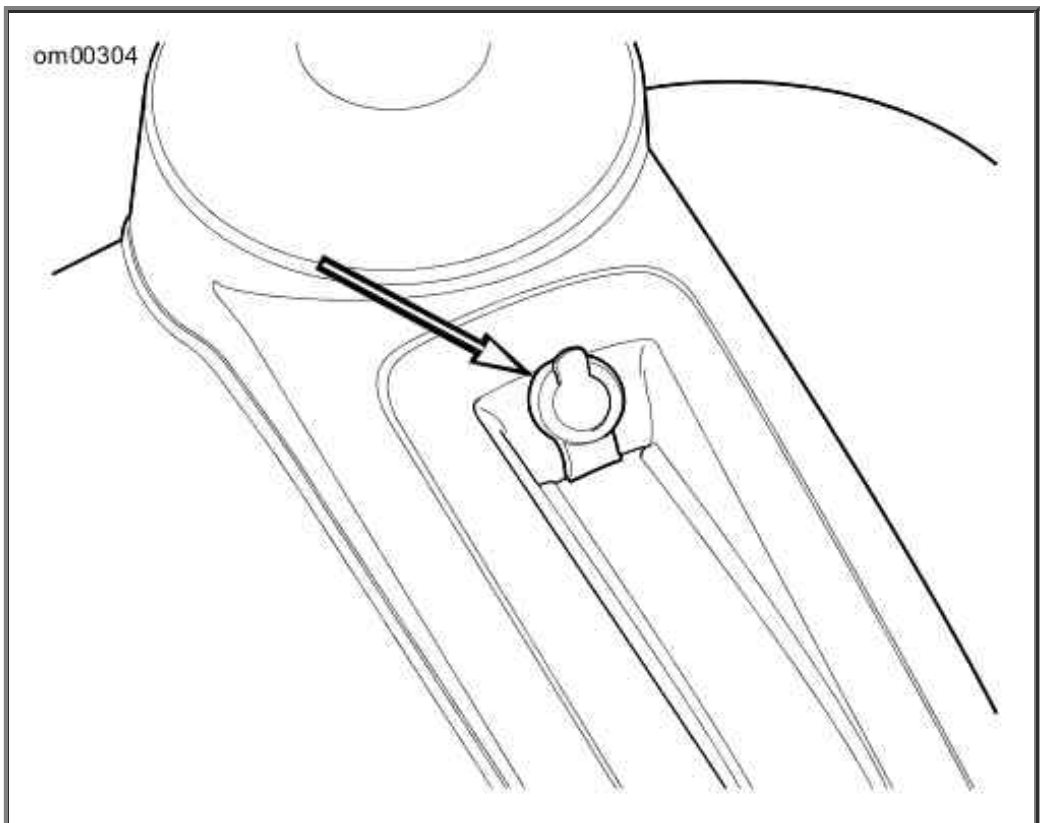

Front Headset Socket Cap

VOX Microphones

The Harley-Davidson intercom uses a voice-activated (VOX) microphone for hands-free intercom operation. The headset microphone minimizes the transmission of hand-held microphone generated noise.

The intercom is activated when a voice or sound exceeds a preset audio level, the voice is said to "break VOX". The voice or sound is transmitted to the headsets.

NOTE:

*Pressing and holding the **PTT** switch will also open the microphone.*

Once VOX is broken, a conversation can proceed uninterrupted. After the absence of sound or voice, there is a delay of approximately 2 seconds before the microphone is deactivated. This delay in deactivation allows for pauses in conversation.

Because loud exhausts, passing trucks, car horns or other background sounds may unintentionally activate the intercom, the sound level necessary to break VOX is adjustable. See Intercom Operation.

Speaker Controls

SPKR Switch

A three position speaker (SPKR) switch is located on the inner fairing cap of the FLHTCU and the FLTR. See FLHTCU SPKR Switch .

NOTE:

The SPKR switch found on the FLTR is inoperable.

Off/Forward: In the forward position, the speakers are off. Audio (radio, CD/MP3, AUX and CB) is played in the headsets only. During simultaneous CB reception, the other audio source is muted and only the CB is heard in the headsets.

Center: In the center position, the radio, CD/MP3 player or AUX is played over the speakers while the CB is played only in the headsets.

On/Rearward: In the rearward position, the speakers are on. With the SPKR indicator lit, the radio, the CD/MP3 player, or any AUX device and the CB are played through both the rider and passenger speakers. When a CB signal is received, other audio sources mute and the CB is played over the speakers. Refer to Audio Routing and Mixing Combinations.

NOTE:

The intercom is only heard in the headsets, regardless of the SPKR switch position.

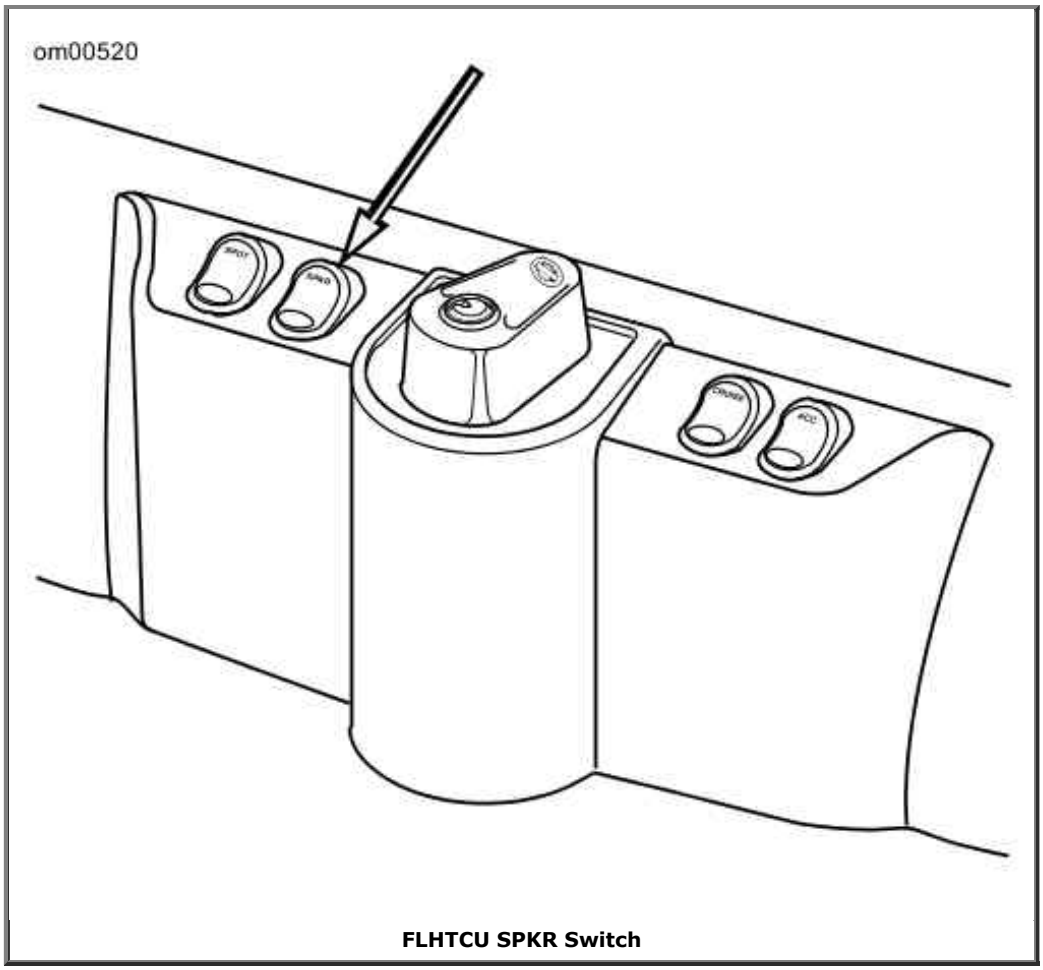

FLHTCU SPKR Switch

Rider to Passenger Speaker Balance

The receiver FADER control balances the front rider and rear passenger speakers.

NOTE:

FADER is available only on the FLHTCU equipped with rider front and passenger rear speakers.

FADER: With the fairing speaker switch in either the SPKR or center position, press the **AUDIO** switch to cycle through Bass to Treble to Fade in the LCD. Or with the motorcycle stationary, press the left hand **AUDIO** switch once to enter the Bass display and select Fade with the **MODE SEL** switch or with the soft key.

The LCD displays the word Fader and a row of outlined rectangles. The smaller center rectangle indicates equal balance between front and rear speakers. A single solid rectangle moves left or right of the center dash as the balance of volume is switched from the passenger speakers (to the left) to the rider speakers (to the right). See C in Display Examples.

- Press the AUDIO switch up (+) to raise the volume from the rider speakers while lowering the volume from the passenger speakers.
- Press the AUDIO switch down (-) to raise the volume from the passenger speakers while lowering the volume from the rider speakers.

Passenger Controls

UP/MODE SEL/DN Switch

See FLHTCU Passenger Controls. The passenger **MODE SEL** switch gives the passenger control of radio band selection, tuning, CD/MP3 operation and all functions of the hand grip mounted **MODE SEL** switch.

NOTE:

For information on routing audio signals to the passenger speakers and headsets, refer to Audio Routing and Mixing Combinations.

PTT and +/VOL/- Switch

See FLHTCU Passenger Controls. The **PTT/+/VOL/-** switch on the right side of speaker box allows the passenger to talk over the intercom or transmit over the CB as well as to raise or lower the rear headset volume.

See F in Display Examples. When the rear headset volume is adjusted, a F (front) and R (rear) bar graph appear in the LCD display.

NOTES:

- *The passenger VOL switch affects only the passenger headset. The hand grip mounted **AUDIO** switch is the master volume control, and used in conjunction with the FADER, affects both the rider and passenger speaker volume.*
- *With stereo receiver tuning, radio band selection, CD/MP3 track selection or other functions, simultaneous use of front and rear **MODE SEL** switches may cause operation to be suspended until either rider or passenger controls are released.*

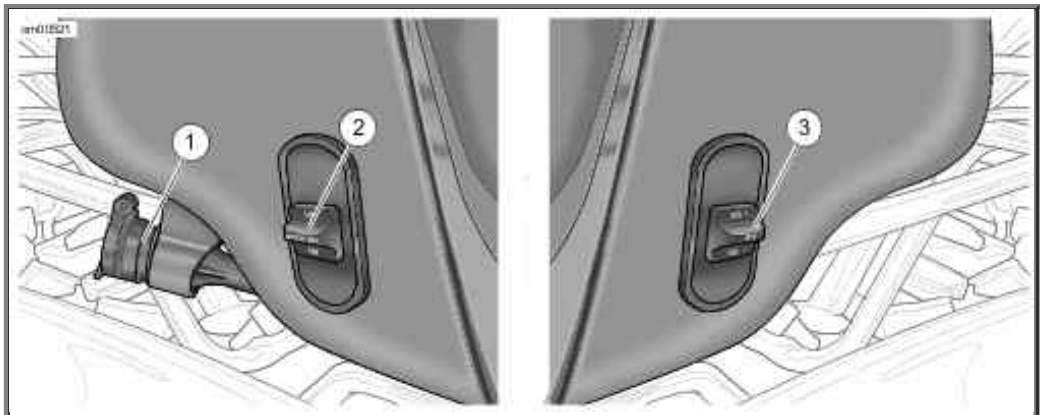

1. Passenger headset socket (left side)
2. UP/MODE SEL/DN (left side)
3. PTT/+/VOL/- (right side)

FLHTCU Passenger Controls

Sidecar Controls

See FLHTCU Passenger Controls. A **MODE/+/TUNE/-** press and tilt switch, a **PTT/+/VOL/-** press and tilt switch and a headset socket are mounted on the dash of the TLE Ultra sidecar for the FLHTCU. These controls and stereo speakers of the sidecar are connected to the Advanced Audio System through a wire harness.

MODE and +/TUNE/- Switch

The **MODE/+/TUNE/-** switch controls radio band selection, station tuning, and CD/MP3 track selection and operation. The **MODE/+/TUNE/-** switch operates like the hand grip mounted **UP/MODE SEL/DN** switch.

PTT/+/VOL/-

The **PTT/+/VOL/-** press and tilt switch controls the volume in the sidecar speakers and headset and is used to open the intercom and transmit over the CB.

Pressing the **PTT** switch left (**+**) raises the volume level for the currently selected Audio. Pressing the switch right (**-**) lowers the volume level.

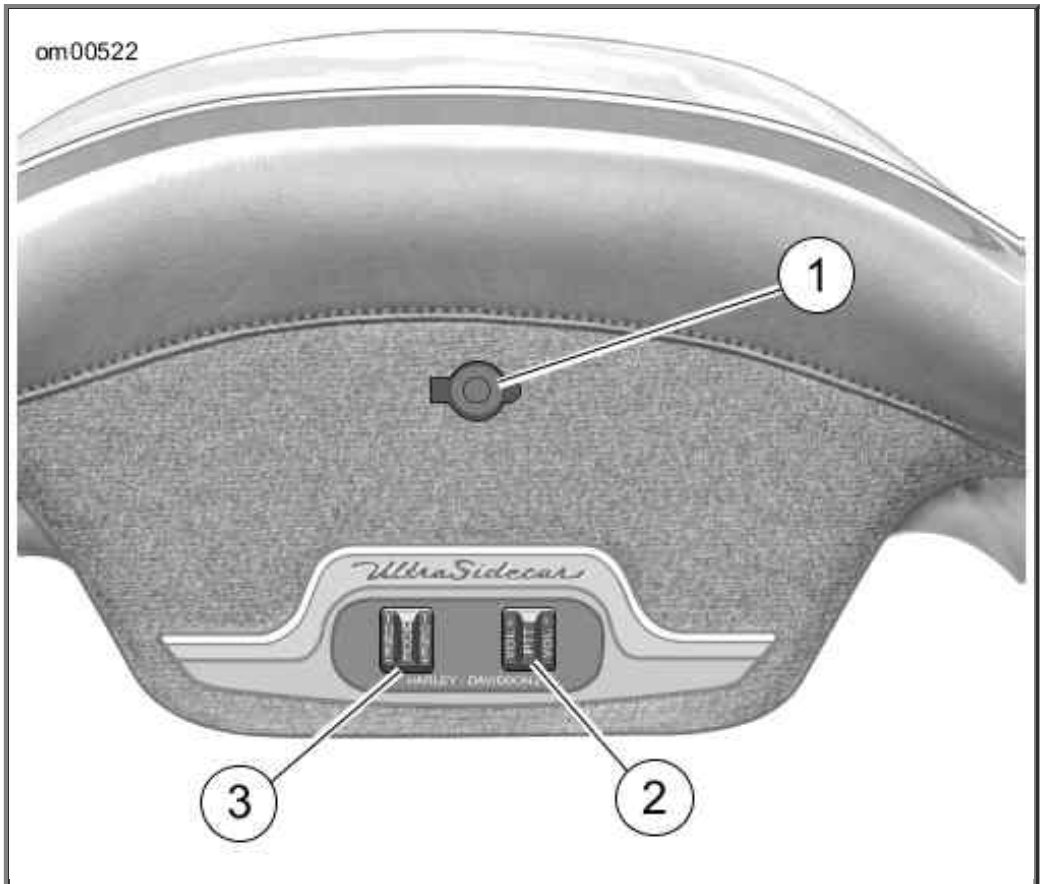

1. Headset socket
2. PTT/+/VOL/-
3. MODE/+/TUNE/-

TLE Ultra Sidecar Audio Controls

Speaker Output Power

MODEL	TOTAL WATTS	SPEAKERS	OHMS PER SPEAKER
FLTR FLHTC	40	2 speakers, 20 watts each	2
FLHTCU	80	4 speakers, 20 watts each	2
TLE Sidecar w/amplifier	40	2 speakers, 20 watts each	2

Intercom Operation

Operation

To speak over the intercom, press and hold either rider or passenger **PTT** switch to enable the

microphones. Both microphones are active while one or both **PTT** switches are pressed.

NOTE:

Always verify that the CB is off so that private intercom conversations will not be transmitted.

Activating the Intercom and the VOX Microphones

Press and hold the **INT** button on the front panel, to open the Intercom Setup display.

See D in Display Examples. To activate the intercom (INT) and the VOX microphones, press soft key **1** to turn the intercom ON.

The intercom will activate in Intercom Setup with VOX sensitivity and headset volume level settings from the previous use. VOX sensitivity and headset volume are adjusted in Int Setup only.

To exit Int Setup, press and release the **MODE SEL** switch or the **INT** button.

To make adjustments to VOX sensitivity after exiting Intercom Setup, re-enter Intercom Setup by pressing **INT**.

NOTE:

To ensure privacy, the intercom can only be heard through the headsets.

To turn OFF the intercom and the VOX microphones, press the **INT** button to open the Intercom Setup display and press the On/Off soft key (**1**).

Adjusting VOX Sensitivity

VOX sensitivity should be adjusted so that the microphones break VOX at a normal voice level.

Enter Intercom Setup by pressing the **INT** button. Press the ON or **1** soft key to turn the intercom on.

See G in Display Examples. Press the **MODE SEL** switch **UP** or **DN** or press the **4** or **5** soft key to initiate the VOX display. The LCD displays VOX sensitivity as a bar graph with a smaller bar to indicate the center of the 14 bars. A higher number of bars indicates greater sensitivity while a lower number means less sensitivity.

Continue to use **MODE SEL** on the right hand grip to adjust the sensitivity level. Press **MODE SEL UP** to make the microphone more sensitive. Press the **MODE SEL DN** to reduce sensitivity. To exit Setup, press and release the **MODE SEL** switch.

NOTES:

- *The receiver retains the sensitivity level from the previous setup. However, if power is removed from the receiver, VOX sensitivity defaults to mid level.*
- *VOX sensitivity may have to be adjusted if either microphone is unintentionally activated because the microphone misinterprets radio, road or background sound as conversation.*

When VOX is set to its maximum, the microphone is always open. The VOX display will read Open.

When VOX is set to lowest value, the microphone is closed and the VOX display reads Closed.

Adjusting Rider Headset Volume

The rider intercom volume is only adjustable in Intercom Setup.

See E in Display Examples. Enter Intercom Setup, speak into microphone and adjust the intercom volume with the AUDIO switch on the left hand grip. Press **AUDIO +** to raise the volume and **AUDIO -** to lower the volume. The LCD displays a dashed line that changes length with the level.

See F in Display Examples. When the headset volume has been adjusted to the bottom of its range, Mute will appear in the volume display.

To exit Intercom Setup, press and release the **MODE SEL** switch.

⚠WARNING

Set intercom volume level and other controls before riding to minimize adjustments on the road. Distractions can lead to loss of control, resulting in death or serious injury. (00088a)

Adjusting Passenger Headset Volume

The passenger intercom volume is only adjustable in Intercom Setup.

Enter Intercom Setup. Speak into the microphone and adjust the intercom volume with the **AUDIO** switch on the right speaker box on the passenger's backrest. Press **AUDIO +** to raise the volume and **-** to lower the volume. The LCD displays a bar graph that changes length with the level.

See F in Display Examples. When the headset volume has been adjusted to the bottom of its range, Mute will appear in the volume display.

To exit Intercom Setup, press and release the **MODE SEL** switch or press the INT pushbutton.

CB Operation

Activating the CB

See H and I in Display Examples. To activate the Citizen Band transceiver, press and release the **COM** pushbutton on the front panel. Press soft key **1** to turn the CB ON/OFF. The CB will activate in CB Setup with squelch threshold and channel settings from the previous use. CB channels are selected in CB Setup.

To exit CB Setup but leave the receiver with the CB active, press and release the **MODE SEL** switch or the **COM** pushbutton.

To turn off the CB, press the **COM** button to enter CB Setup. Press soft key **1** to turn the CB ON and Off.

CAUTION

There are no adjustments internal to the CB transceiver chassis that can be performed without risking non-compliance with Federal Communications Commission (FCC) rules. Refer to the original equipment manufacturer for any service required during the warranty period. For transmitter service after the warranty period, refer to a certified repair service. Any frequency determining components, such as crystals, or power determining semi-conductors, etc., should only be replaced with the original component manufacturer's part or equivalent. Substitutes can result in violation of FCC rules. (00175a)

Entering CB Setup

See J in Display Examples. With the CB on, press **COM** to enter CB Setup. The LCD displays CB SETUP in the upper half and the CB channel appears in the lower half.

To exit CB Setup, press and release the **MODE SEL** switch.

After exiting CB Setup with the CB still active, re-enter CB Setup by pressing and releasing the **COM** soft key.

Selecting a Channel

In CB Setup, use the **MODE SEL** switch to select a CB channel. Press and release **MODE SEL UP** or **DN** to switch channels one at a time.

Soft keys 4, 5 and 6 can be used to preset CB channels.

If the **MODE SEL** switch is held up or down, tuning continuously wraps around the ends of the channels.

See K in Display Examples. When squelch is broken, the CB in the display inverts. If the squelch is not broken and the another source is playing, CB is displayed.

⚠WARNING

Set CB channel, squelch threshold and volume before riding to minimize adjustments on the road. Distractions can lead to loss of control, resulting in death or serious injury. (00089a)

Preset Channels

See J in Display Examples. Up to 3 CB channels can be preset. Press and hold a soft key (4, 5, 6) to preset a CB channel.

Once set, press the preset soft key to switch to the preset channel when the CB display is active.

Adjusting Squelch

See K in Display Examples. The CB signal is passed to the speakers or headsets only if signal strength exceeds the threshold set with the squelch control switch (**PTT/+/SQ/-**). When CB signals exceed the threshold, they are said to "break squelch." Refer to Squelch Control Switch.

- To lower the threshold to process the weakest CB signals, press **SQ -** or rearward.
- To raise the threshold to process stronger signals, press **SQ +** or forward.

In the LCD, a dashed line changes length with the setting.

Squelch Control Switch

SQ (-) REARWARD	SQ (+) FORWARD
More signals	Fewer signals
More noise	Less noise
More static	Less static
Unwanted signals	Better sound quality

Transmitting

To transmit, press and hold the **PTT** switch. Transmission is over the CB channel displayed in the LCD. To end transmission, release **PTT**.

Adjusting Volume

Refer to Audio Routing and Mixing Combinations. See L in Display Examples. To adjust volume of the CB in the speakers or headset, Press **AUDIO +** to raise the volume or **-**lower the volume. CB volume is adjustable when squelch is broken or when the display is in CB Setup.

A dashed line that changes length with the volume setting is displayed.

CAUTION

Operating the CB radio without an antenna or with a broken antenna cable can result in damage to the transmitter circuitry. (00176a)

CB Range

Maximum transmission range can only be expected under stable weather conditions in flat, open country.

Weather: In times of atmospheric disturbances, such as rain, snow, or even sunspots, the CBs

range can be reduced.

Terrain: Buildings, hills, valleys or any elevated objects or depressions that either block or create a longer path between transmitter and receiver will reduce or disrupt communications.

Obstructions: Transmissions may be cut off under a viaduct or inside a tunnel or parking garage.

NOTE:

The CB transmitter is the most powerful allowed under Federal law, but since there is no large steel area to create a ground plane, it may not transmit as strongly as when mounted in a car or truck.

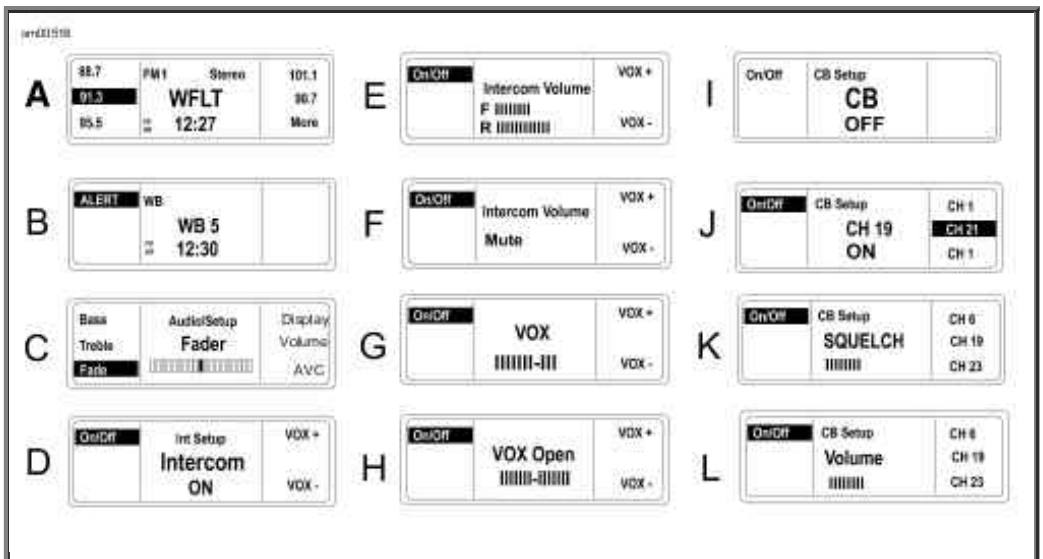

Display Examples

Audio Routing and Mixing

General

Refer to Audio Routing and Mixing Combinations. Whether audio is routed to the headsets, speakers or both depends on the **SPKR** control switch and the **INT** and **CB** buttons on the receiver.

A single audio source routed to headset or speaker can be controlled with the riders **AUDIO** switch or the passenger **VOL** switch.

NOTE:

*The passenger volume control switch affects only the passenger headset. The handlebar mounted **AUDIO** switch is the master volume control, and used in conjunction with the fader, affects both the rider and passenger speaker volume.*

Audio Routing and Mixing Combinations

AUDIO ROUTING COMBINATIONS			VOLUME CONTROL
SPEAKER CONTROL SWITCH	**AUDIO SOURCE(S)**	**AUDIO OUT**	**AUDIO ± OR VOL ±**
Off or Forward	Music*	Headsets	Music*

Off or Forward (Headsets)	Music*	Headsets	Music*
	CB	Headsets	CB (During reception or SETUP)
	Intercom	Headsets	Intercom (Only in SETUP)
	Intercom and music*	Both in the headsets	Music
	CB and music*	CB in the headsets (Music is muted during CB reception)	CB (During reception or SETUP)
	Intercom and CB	Both in the headsets (Music is muted during CB reception)	CB (During reception or Setup)
Center (Speakers and headsets)	Music*	Speakers	Music*
	CB	Headsets	CB (During reception or SETUP)
	Intercom	Headsets	Intercom (Only in SETUP)
	Intercom and music*	Intercom in the headsets Music* in the speakers	Music*
	CB and music*	CB in the headsets Music* in the speakers Music is muted during CB recption	CB
	Intercom and CB	Both in the headsets (Music is MUTED during CB reception)	CB*
On or rearward (Speakers)	Music*	Speakers	Music*
	CB	Speakers	CB (During reception or SETUP)
	Intercom	Headsets	Intercom (Only in SETUP)
	Intercom and music*	Intercom in the headsets. Music in the speakers.	Music
	CB and music*	CB in the speakers (When squelch is broken)	CB
	Intercom and CB	Intercom in the headsets (CB in the speakers MUTED during CB reception)	CB
* Music = Radio, CD player or auxiliary (AUX) audio source.			

Operational Troubleshooting

Refer to Operational Troubleshooting: Advanced Audio System. Use the following table to identify rider or passenger control settings that prevent intended operation.

NOTE:

See the Touring Models ELECTRICAL DIAGNOSTIC MANUAL for all system diagnosis and electrical troubleshooting information.

CAUTION

There are no serviceable parts inside the unit; leave all servicing to qualified service personnel. Disassembly of the unit could result in equipment damage and/or equipment malfunction. (00172a)

⚠WARNING

Do not disassemble unit. Laser radiation is present if disc player is disassembled and the interlock fails or is defeated. Exposure to laser radiation could lead to death or serious injury. (00087a)

Radio Fuses

If it is necessary to replace the radio fuses, follow the fuse replacement procedures in this manual or see your Harley-Davidson dealer for service.

See Radio Fuses. Radio fuses are located in the fuse block under the left side cover.

- A 15 amp radio power fuse allows power to the radio through activation of an internal relay.
- A 15 amp radio memory fuse provides direct and continuous power to the radio memory and time-of-day clock, and when the internal relay is activated, feeds the main circuits of the radio as well.
- A 30 amp fuse provides power to the amplifier mounted under the Tour-Pak.

Remove the radio fuses and inspect the element. Replace the fuse if the element is burned or broken.

NOTE:

See Radio Fuses. Spare 15 and 30 amp fuses are installed in the fuse block.

Operational Troubleshooting: Advanced Audio System

THIS	CAN PREVENT THIS
Squelch broken	Fairing music

Squelch broken	Fairing music
	Headset music
	Passenger speaker music
Squelch unbroken	CB audio
CB off or low volume	CB audio
Front or rear PTT on	Fairing music
	Headset music
	Passenger speaker music
	CB audio
Handlebar volume low	Fairing music
	Headset music
	Passenger speaker music
Passenger headset volume low	Passenger headset music and CB audio
Fairing SPKR back to speaker	Headset music and headset CB audio
Fairing SPKR forward to headset	Fairing music and CB audio
INT off	Voice communications (Unless PTT is pressed)

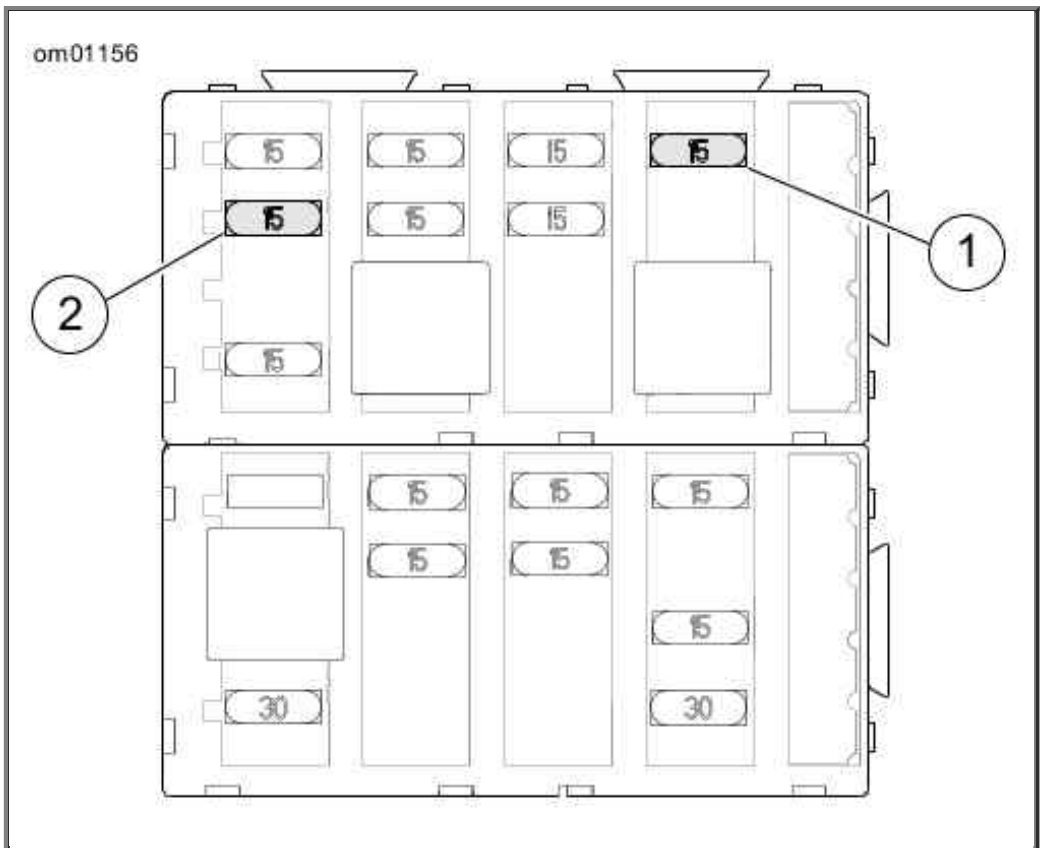

1. Radio power (15 Amp)
2. Radio memory (15 Amp)

Radio Fuses

Hands-Free Security Module

Harley-Davidson Smart Security System

Components

See Security Module w/Antenna. The Harley-Davidson Smart Security System (H-DSSS) consists of a Hands-Free Security Module (HFSM) (1) and a Hands-Free Antenna (2) mounted on the motorcycle, and a Hands-Free Fob **carried** by the rider/passenger.

After parking the motorcycle, turn the ignition key to OFF and the Smart Security System will automatically **arm** within five seconds. While armed, the starter and ignition are disabled and the rider may leave the motorcycle knowing that the module will activate an alarm if someone tampers with the ignition or attempts to move the motorcycle.

If the fob is present, the module will automatically **disarm** when the ignition key is turned to IGNITION or ACCESS.

NOTE:

Do not relocate the module or the antenna on the motorcycle.

Options

Several options are available for the Harley-Davidson Smart Security System from the Harley-Davidson Genuine Motor Accessories and Motor Parts catalog. Options include:

- Smart Siren and Smart Siren II.
- Security Pager and Security Pager Receiver II.
- Replacement Fobs.

See a Harley-Davidson dealer for details.

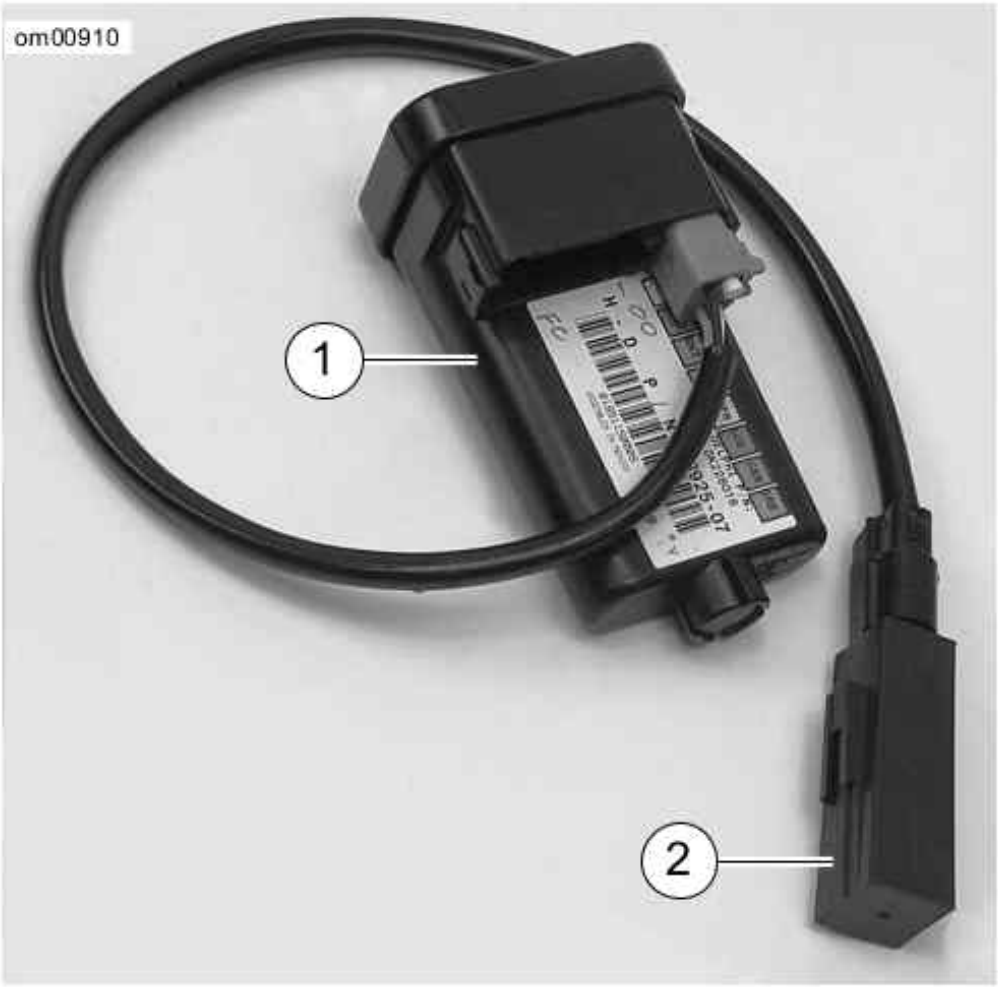

1. Hands-Free Security Module
2. Hands-Free Antenna

Security Module w/Antenna

FCC Regulations

FCC ID: L2C0027TR IC ID: 3432A-0027TR

FCC ID: L2C0028TR IC ID: 3432A-0028TR

This device complies with Part 15 of the FCC Rules and with RSS-210 of Industry Canada rules. Operation is subject to the following two conditions:

(1) This device may not cause harmful interference, and (2) This device must accept any interference received, including interference that may cause undesired operation.

WARNING: Changes or modifications not expressively approved by the party responsible for compliance could void the user's authority to operate the equipment.

The term "IC:" before the radio certification number only signifies that Industry Canada technical specifications were met.

Hands-Free Fob

Fob Assignment

See Hands-Free Fob: Smart Security System. Hands-Free Fobs are electronically assigned to the Harley-Davidson Smart Security System by a Harley-Davidson dealer so that the module can recognize a fob's unique signal. Only two fobs can be assigned to the module at any one time.

Replacement fobs can be purchased from a dealership but can only be assigned to the motorcycle by a trained Harley-Davidson technician.

NOTES:

- *The reusable label found on the fob packaging lists the serial number of the fob. For reference, fix the label to a blank "NOTES" page in the Owner's Manual.*
- *The serial number of the fob is also found on the inside of the fob. See Fob Battery.*
- *The module will arm only if the fob has been assigned by a Harley-Davidson dealer and a Personal Identification Number (PIN) has been entered in the system. The PIN should be recorded on the Personal Information page in the front of this Owner's Manual and on the removable wallet card.*
- *Should the rider misplace the fob or if the fob fails, the rider can refer to the wallet card and use the PIN to manually disarm the system. Refer to Arming and Disarming and Troubleshooting.*
- *The PIN can easily be changed by the rider at any time. Refer to Personal Identification Number (PIN).*

Hands-Free Fob: Smart Security System

Riding with a Fob

- Always carry the fob when riding, loading, fueling, moving, parking or servicing the motorcycle. Carry the fob in a convenient pocket.

- Do not leave the fob attached to the handlebars or store the fob in a saddlebag or Tour-Pak®. Unintentionally leaving the fob with the motorcycle when it's parked prevents the system from activating the alarm.
- Do not ride with the fob stored in a metal case or with the fob closer than 3.0 in. 76 mm to a cell phone, PDA, display or other electronic device. Any electromagnetic interference may prevent the fob from disarming the system.
- For added security, always lock the fork and remove the ignition key when parked. If the fob is within range and the motorcycle is unlocked, tampering with the motorcycle will not activate the alarm.

Personal Identification Number (PIN)

The Personal Identification Number (PIN) is a number that can be used to disarm the Harley-Davidson Smart Security System in case an assigned fob is misplaced, fails or if the fob and module cannot communicate because of electromagnetic interference.

A PIN is a five-digit number (1-9, no zeros).

Changing the PIN

To maintain security, the rider can change the PIN at any time. Refer to Changing the PIN.

Changing the PIN

STEP NO.	ACTION	WAIT FOR CONFIRMATION	NOTES
1	Select a 5-digit (1 thru 9) PIN and record on the wallet card from Owner's Manual.		
2	With an assigned fob present, turn **IGN** key **IGNITION**-OFF-**IGNITION**-OFF-**IGNITION.**		
3	Press **left** turn signal switch **3 times**.		
4	Press **right** turn signal switch **1 time** and release.	Turn signals will flash 3 times. Current PIN will appear in odometer. The first digit will be flashing.	See figure showing the odometer window with PIN display.
5	Enter first digit (a) of new PIN by pressing **left** turn signal switch **a** times.		
6	Press **right** turn signal switch **1 time** and release.	The new digit (a) will replace the current in odometer window.	
7	Enter second digit (b) of new PIN by pressing **left** turn signal switch **b** times.		
8	Press **right** turn signal switch **1 time** and release.	The new digit (b) will replace the current in odometer window.	
9	Enter third digit (c) of new PIN		

	by pressing **left** turn signal switch **c** times.		
10	Press **right** turn switch **1 time** and release.	The new digit (c) will replace the current in odometer window.	
11	Enter fourth digit (d) of new PIN by pressing **left** turn signal switch **d** times.		
12	Press **right** turn switch **1 time** and release.	The new digit (d) will replace the current in odometer window.	
13	Enter fifth digit (e) of new PIN by pressing **left** turn signal switch **e** times.		
14	Press **right** turn switch **1 time** and release.	The new digit (e) will replace the current in odometer window.	
15	Before the module rearms, turn the ignition key to **OFF**.	The odometer will return to mileage.	Turning the ignition key to **OFF** stores the new PIN in the module.

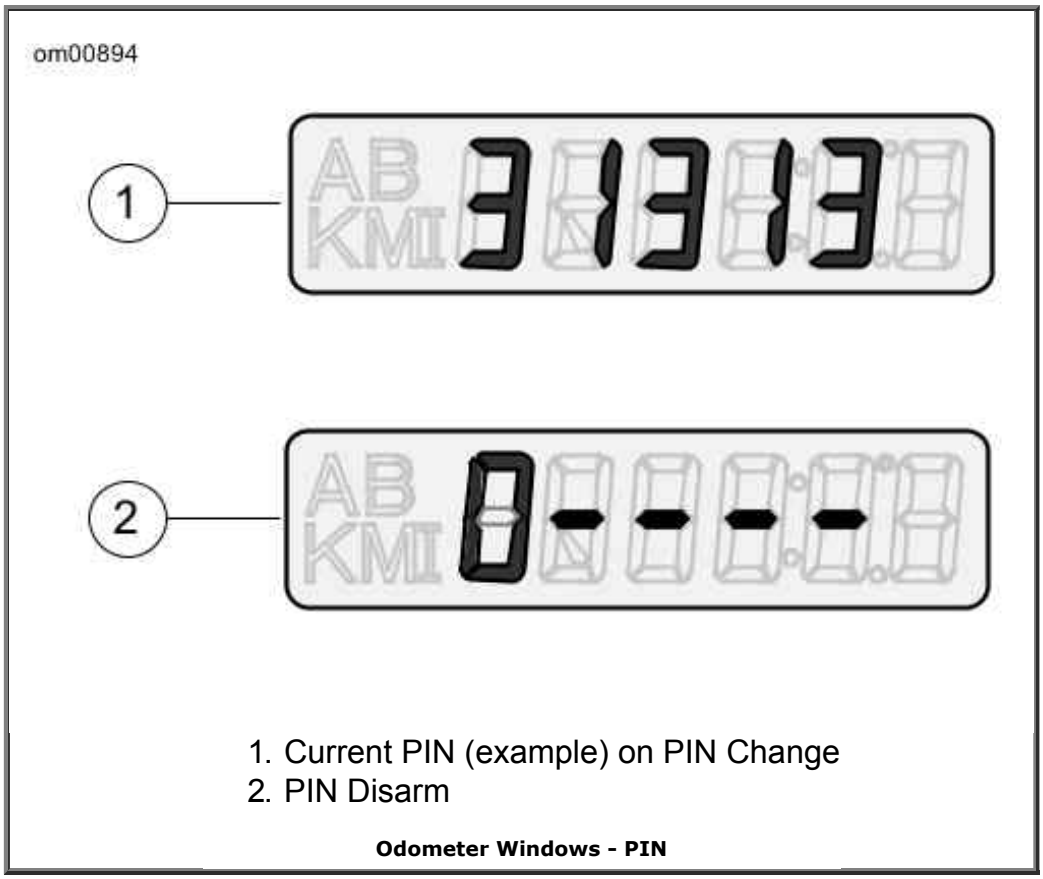

1. Current PIN (example) on PIN Change
2. PIN Disarm

Odometer Windows - PIN

Security Status Indicator

See Security Status Indicator. The illuminated key icon in the speedometer face indicates the status of the Harley-Davidson Smart Security System.

- **Armed:** A key icon that blinks approximately every 3 seconds indicates that the system is armed.

- **Disarmed:** After the ignition/headlamp switch is turned to IGNITION and the system disarms, the key icon will remain illuminated for approximately four seconds and then turn off.
- **Service:** A key icon that remains illuminated longer than four seconds indicates that service of the module is required.

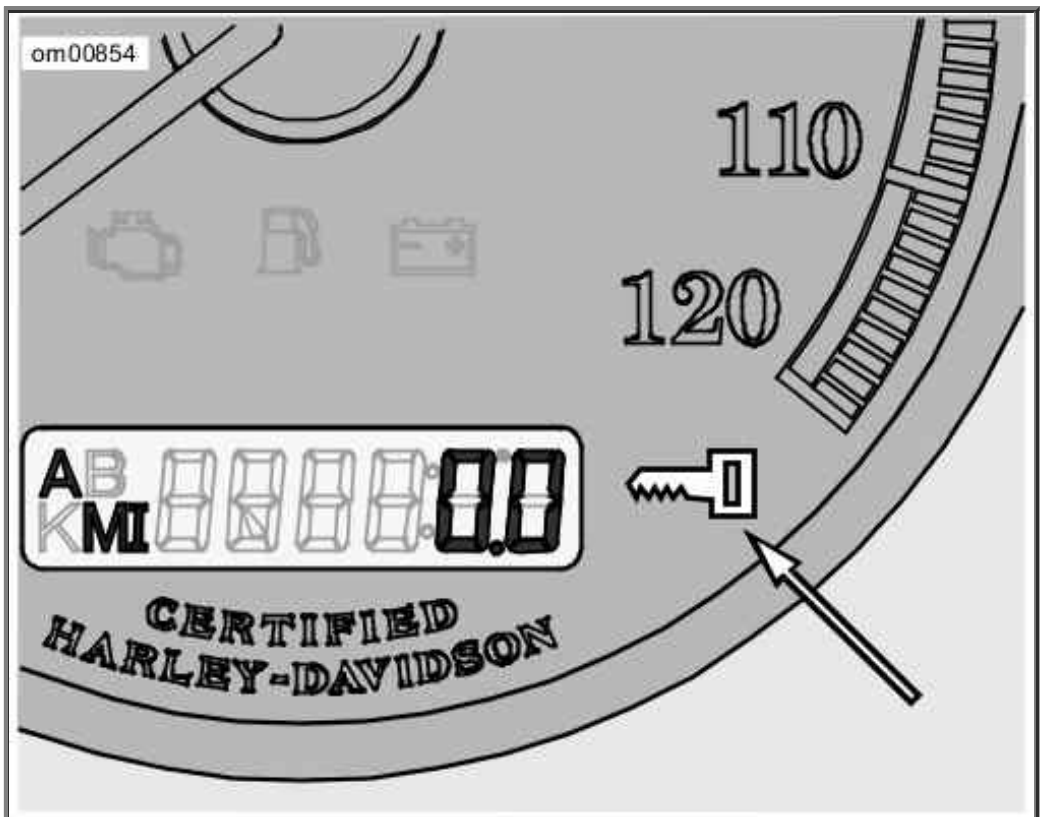

Security Status Indicator

Arming and Disarming

Arming

When the motorcycle is parked and the ignition key is turned to OFF, the Harley-Davidson Smart Security System arms automatically within five seconds if no motion is detected. Even when the fob is present, the system will arm.

On arming, the turn signals will flash twice and the optional siren will chirp twice. While armed, the key icon in the speedometer face will flash every three seconds.

NOTE:

International Models: *The HFSM must be in the Chirp Mode for the siren to chirp on arming or on disarming. See Siren Chirp Mode (Confirmation).*

Disarming

Once disarmed, the rider may ride or move the motorcycle for parking, storage or service without setting off the alarm.

Fob: An armed Smart Security System is automatically disarmed when the ignition key is turned to IGNITION with the fob present.

When the module disarms, the optional siren will chirp once and the key icon will illuminate for a solid four seconds and then turn off.

NOTE:

Any motion, like lifting the motorcycle up off of its jiffy stand, or turning the ignition key to IGNITION and the module will electronically "poll" for the presence of the fob. If the fob is present, the system disarms.

Personal Identification Number (PIN): If the fob is misplaced or if the present fob fails to communicate with the module, the system can be disarmed with the Personal Identification Number (PIN).

Disarming with a PIN

Do not turn handlebars, straddle seat or lift motorcycle off the jiffy stand. During a PIN disarm, if the Smart Security System detects motorcycle motion the system will activate the alarm.

Entering a PIN to Disarm Harley-Davidson Smart Security System

STEP NO.	ACTION	WAIT FOR CONFIRMATION	NOTES
1	If necessary, verify the current 5-digit PIN.		Should be recorded on wallet card.
2	Turn ignition key to **IGNITION**.		
3	Quickly (within 2 seconds of turning ignition key) hold **both** turn signal switches in until confirmation.	Key icon flashes at fast rate. In the odometer window, a flashing dash will be followed by four more dashes.	See figure showing the odometer window with PIN display. Five dashes will appear in the odometer window.
4	Enter first digit (**a**) in the PIN by pressing **left** turn switch **a times.**	The first digit (**a**) in the odometer will be the first digit in the PIN.	
5	Press **right** turn switch **1 time.**	The first digit is stored and the dash will flash.	Serves as enter key.
6	Enter second digit (**b**) in the PIN by pressing **left** turn switch **b times.**	The second digit (**b**) in the odometer will be the second digit in the PIN.	
7	Press **right** turn switch **1 time.**	The second digit is stored and the next dash will flash.	Serves as enter key.
8	Enter third digit (**c**) in the PIN by pressing **left** turn switch **c times.**	The third digit (**c**) in the odometer will be the third digit in the PIN.	
9	Press **right** turn switch **1 time**.	The third digit is stored and the next dash will flash.	Serves as enter key.
10	Enter fourth digit (**d**) in the PIN by pressing **left** turn switch **d times**.	The fourth digit (**d**) in the odometer will be the fourth digit in the PIN.	
11	Press **right** turn switch **1**	The fourth digit is stored and	Serves as enter key.

	time.	the next dash will flash.	
12	Enter fifth digit (**e**) in the PIN by pressing **left** turn switch **e times.**	The fifth digit (**e**) in the odometer will be the fifth digit in the PIN.	
13	Press **right** turn switch **1 time**.	The fifth digit is stored. The key icon stops blinking.	Smart Security System is disarmed.

NOTES:

- *At any time during a PIN disarm, if the fob is brought within range of the motorcycle, the Smart Security System will disarm when the module receives the coded signal from the fob.*
- *If a mistake is made while entering PIN, wait two minutes before another disarming attempt.*
- *The Smart Security System will remain disarmed until the ignition key is turned to OFF.*

Arming with Hazard Warning 4-Way Flashers On

If it should be necessary to leave a motorcycle parked along side a roadway, the hazard warning four-way flashers can be turned ON and the Smart Security System armed.

1. Turn ignition key to ACCESS.
2. Simultaneously press both left and right turn signal switches to turn the four-way flashers ON.
3. Turn the ignition key to OFF to arm the Smart Security System.

To turn hazard warning flashers OFF, turn the ignition key to IGNITION and simultaneously press the left and right turn signal switches.

Alarm

Warnings

Once armed, if the motorcycle is moved or lifted up off of its jiffy stand or if the ignition key is turned to IGNITION and the fob is not present, the alarm will warn the operator with three alternate flashes of the turn signals and a chirp of the optional siren.

Within four seconds, if the motorcycle is back on its jiffy stand and no further motion is detected and/or the ignition key is turned to OFF, the module will remain armed without activating the alarm.

If the motorcycle motion continues or the ignition key is not turned back to OFF, the module will issue a second warning four seconds after the first.

NOTE:

During warnings and alarms, the starter motor and the ignition circuits are disabled.

The Alarm

If the Smart Security System is still detecting motion and/or if the ignition key has not been turned back to OFF after a second warning, the system will activate the alarm.

When activated, the Smart Security System will:

- Alternately flash the four turn signals.
- See Optional Smart Siren. Sound the optional siren.

Duration: The alarm will stop within 30 seconds and if no motion is detected, the alarm will not restart.

However, if motorcycle motion continues the system will repeat the 30 second alarm and recheck for motion. The alarm will repeat this 30 second alarm cycle for five minutes (10 cycles) or until the alarm is deactivated.

NOTE:

The alarm will also activate the LED, vibration or audible modes of a Harley-Davidson Security Pager. A pager can operate either in silent or in combination with an optional Smart Siren. The range of a pager can be up to 0.5 mile (0.8 km). See a Harley-Davidson dealer for details.

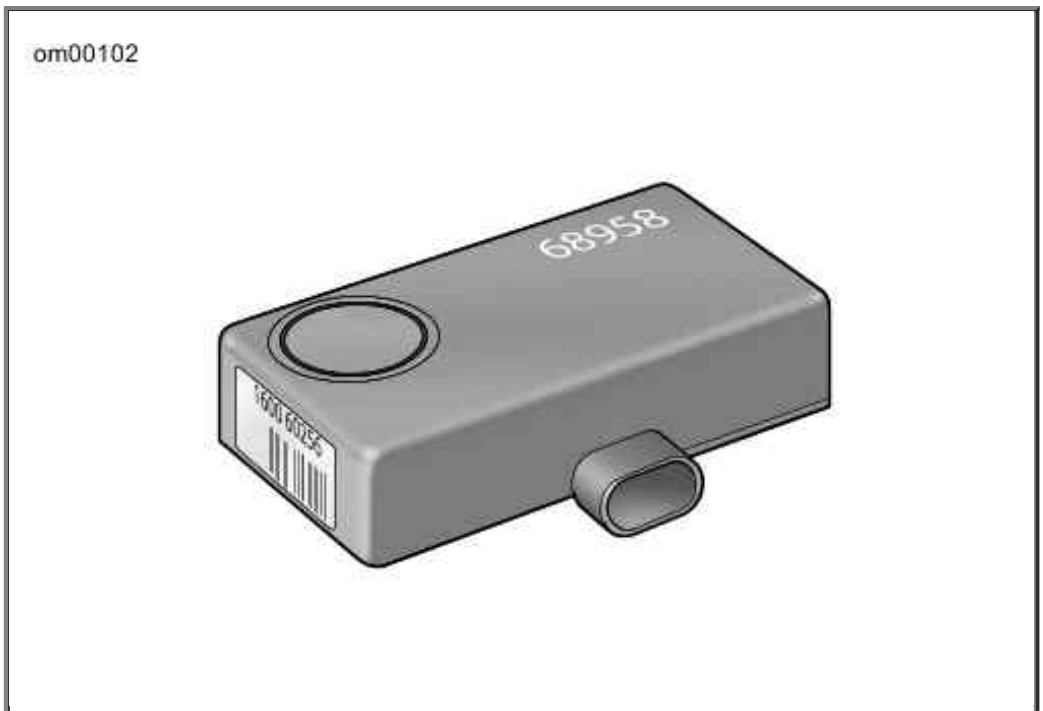

Optional Smart Siren

Deactivate the Alarm

Key Fob: Bring the fob to the motorcycle. After the module identifies that the fob is present, the system will terminate the alarm.

Siren Chirp Mode (Confirmation)

Chirpless Mode

In the chirpless mode, the siren does not chirp on arming or disarming.

NOTE:

Even when armed in the chirpless mode, the siren still chirps warnings on movement and will activate the alarm through cycles.

Chirp Mode

On arming in the chirp mode, the siren responds with two chirps. When disarming, the siren responds with a single chirp.

Switching Modes

Cycling quickly through two armings and disarmings will switch the system from either the chirpless mode or the chirp mode to its opposite.

1. With the fob present, the Ignition Switch to IGNITION and the system disarmed, turn the Ignition Switch OFF.
2. When the system arms (2 flashes of turn signals), immediately turn the Ignition Switch to IGNITION.
3. Wait until the security lamp goes out, then immediately turn the Ignition Switch OFF.
4. When the system arms (2 flashes of turn signals), immediately turn the Ignition Switch to IGNITION and wait for system to disarm.

Transport Mode

It is possible to arm the security system without enabling the motion detector for one ignition cycle. This allows the vehicle to be picked up and moved in an armed state, however, any attempt to start the engine will trigger the alarm.

To Enter Transport Mode:

1. Turn the Ignition Switch to IGNITION.
2. Set the Engine Stop Switch to OFF.
3. With an assigned fob within range, turn the Ignition Switch from IGNITION to ACC, or OFF to ACC, depending on switch sequence.
4. Simultaneously press both the left and the right turn signal switches. This must be done within five seconds of turning the Ignition Switch to ACC.
5. After the turn signals flash once, turn the Ignition Switch to OFF and the module is armed.

To Exit Transport Mode:

Return the system to normal operation:

1. With the fob present, turn the Ignition Switch to IGNITION to disarm the HFSM. To cancel the transport mode, set the Engine Stop Switch to RUN.

Storage and Service Departments

Long Term Parking

To maintain arming, store the fob beyond the range of the module. If the motorcycle is to be moved while parked, have the fob present.

If the motorcycle will not be operated for several months, such as during the winter season, follow the Owner's Manual instructions for storage. Refer to Motorcycle Storage.

Service Departments

When the motorcycle is to be left at a Harley-Davidson dealer, there are two options:

1. Leave an assigned fob with the dealer.
2. To maintain possession of the fob, ask the dealer to disable the module for service (service mode) before leaving the dealership.

Sidecar Configuration

⚠WARNING

Only Touring Harley-Davidson Motorcycles are suitable for sidecar use. Consult a Harley-Davidson dealer. Use of motorcycles other than Touring models with sidecars could result in death or serious injury. (00040a)

CAUTION

Before operating your motorcycle with sidecar attached, have a Harley-Davidson dealer install a Bank Angle Switch kit. The TSM/HFSM will not function properly if not switched to sidecar operation. (00486c)

On motorcycles with a sidecar, the turn signal module (TSM) or the Hands-Free Security Module (HFSM) must be switched from the factory solo vehicle setting to the sidecar setting. Consult a Harley-Davidson dealer for complete details.

If a sidecar is permanently removed from the motorcycle, the TSM or the HFSM must be reconfigured. Refer to the SIDECAR SERVICE MANUAL for complete details.

Fob Battery

Replacing the Battery

Replace the key fob battery every year.

1. See Hands-Free Fob Battery. Slowly turn a thin blade in the thumbnail slot (1) on the side

of the fob to separate the two halves.

2. Remove the battery (2) and discard.

   NOTE:

   Dispose of the old battery in accordance with local regulations.

3. Install a **new** battery (Panasonic 2032 or equivalent) with the positive (+) side down.
4. Align the two halves of the fob and snap together.

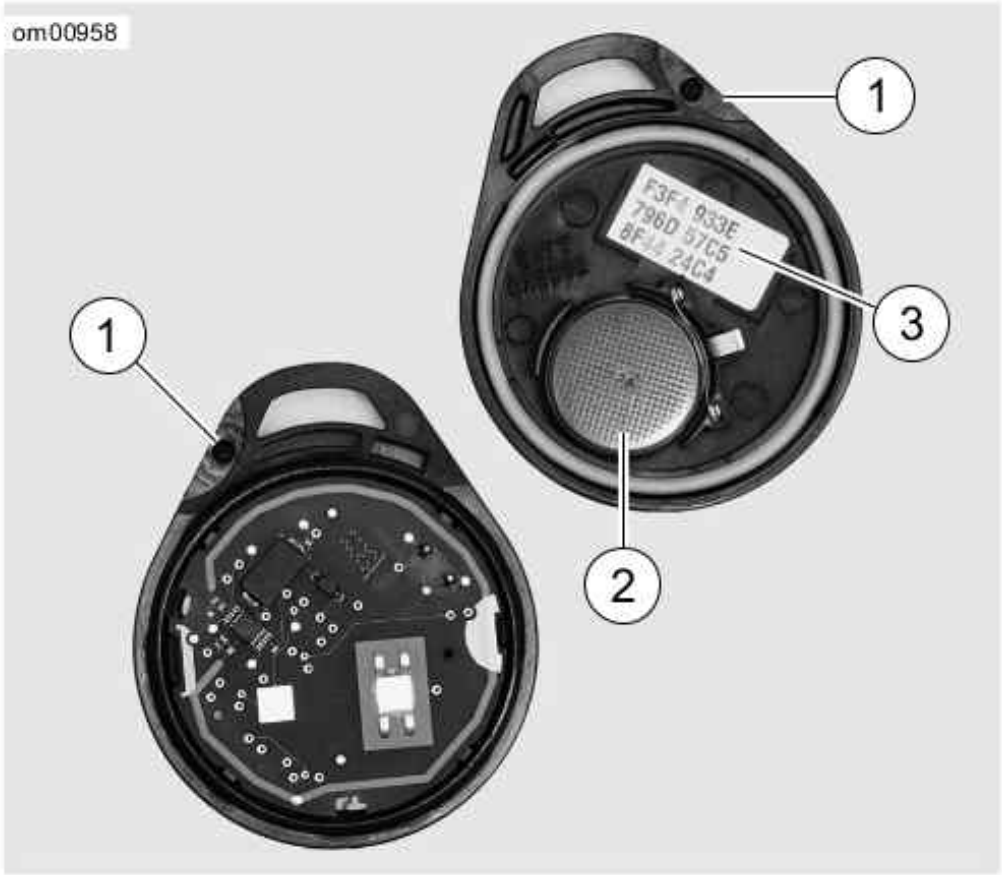

1. Thumbnail slot
2. Battery
3. Fob serial number

Hands-Free Fob Battery

Power Disconnects

Optional Siren

On a power disconnect, to prevent the module from actuating the optional siren:

1. Verify that the fob is present.
2. Turn the ignition key to IGNITION.
3. Pull the maxi-fuse from its holder or disconnect the battery.

Troubleshooting

Key Icon

If the system key icon stays illuminated while riding, see a Harley-Davidson dealer.

Fob

With the fob present, if the Smart Security System continues to actuate warnings and alarms, one of the following can be the cause:

1. **Electromagnetic Interference:** Other electronic devices, power lines, or other electromagnetic sources can cause the Smart Security System to operate inconsistently.

    a. Verify that the fob is not in a metal enclosure or within 3.0 in. 76 mm of any other electronic devices.

    b. Place the fob on the seat and turn the ignition key to IGNITION. After the module disarms, return the fob to a convenient location.

    c. Move motorcycle at least 15 feet 5 m from the spot of interference.

2. **Discharged Fob Battery:** Use the PIN to disarm the module. Replace the battery. Refer to Fob Battery.

3. **A Damaged Fob:** Use the PIN to disarm the motorcycle. Replacement fobs are available for purchase from a Harley-Davidson dealer.

Siren

- If the siren does not chirp two or three times on a valid arming command from the security module, the siren is either in the Chirpless Mode, not connected, not working, or the siren wiring was opened or shorted while the siren was disarmed.
- If the siren is armed and the internal siren battery is dead, shorted, disconnected, or has been charging for a period longer than 24 hours, the siren will respond with three chirps on arming instead of two.
- The internal siren battery may not charge if the vehicle's battery is less than 12.5 volts.
- If the siren enters the self-driven mode where it is powered from the siren's internal 9 volt battery, the turn signal lamps may or may not alternately flash. If the security module activates the siren, the turn signal lamps will alternately flash. If the siren has been armed and a security event occurs, and the siren is in self-driven mode, the siren will alarm for 20 to 30 seconds and then turn off for 5 to 10 seconds. This alarm cycle will be repeated ten times if the siren is in the self-driven mode.

Operation

Operating Recommendations: Touring Models

⚠WARNING

Motorcycles are different from other vehicles. They operate, steer, handle and brake differently. Unskilled or improper use could result in loss of control, death or serious injury. (00556c)

- **Take a rider training course.**
- **Read Owner's Manual before riding, adding accessories or servicing.**
- **Wear a helmet, eye protection and protective clothing.**
- **Never tow a trailer.**

CAUTION

Do not run the engine at extremely high RPM with clutch disengaged or transmission in neutral. Running an engine at high RPM can result in engine damage. (00177a)

- The maximum recommended safe engine speed is 5500 RPM.
- Do not idle engine unnecessarily for more than a few minutes with motorcycle standing still.

CAUTION

Do not exceed the maximum safe RPM specified below under any conditions. Exceeding the maximum safe engine RPM can result in equipment damage. (00248a)

NOTE:

The maximum recommended engine speed for FLT/FLH model motorcycles is 5500 RPM.

CAUTION

Air-cooled engines require air movement over the cylinders and heads to maintain proper operating temperature. Extended periods of idling or parade duty can overheat the engine, resulting in serious engine damage. (00178a)

An engine running long distances at high speed must be given closer than ordinary attention to avoid overheating and possible engine damage.

This applies particularly to a motorcycle equipped with windshield and fairing.

NOTE:

Have the engine checked regularly and keep it well tuned.

⚠WARNING

When riding on wet roads, brake efficiency and traction are greatly reduced. Failure to use care when braking, accelerating or turning on wet roads can cause loss of control, which could result in death or serious injury.

(00041a)

NOTE:

When descending upon a long, steep grade, downshift and use engine compression together with intermittent application of both brakes to slow the motorcycle.

⚠WARNING

Continuous use of brake causes overheating and reduced efficiency, which could result in death or serious injury. (00042a)

CAUTION

Do not coast for long distances with the engine off or idling. The transmission is properly lubricated only when the engine is running. Coasting long distances can result in transmission damage. (00180b)

⚠WARNING

Do not tow a disabled motorcycle. Towing can adversely affect stability and handling, which could result in death or serious injury. (00017a)

Break-in Riding Rules

The First 500 Miles (800 Kilometers)

The sound design, quality materials, and workmanship that are built into your new Harley-Davidson will give you optimum performance right from the start.

To allow your engine to wear in its critical parts, we recommend that you observe the riding rules provided below for the first 500 miles 800 kilometers . Adherence to these suggestions will help to assure good future durability and performance.

1. During the first 50 miles 80 kilometers of riding, keep the engine speed below 4000 RPM in any gear. Do not lug the engine by running or accelerating at very low RPM, or by running at high RPM longer than needed for shifting or passing.

   NOTE:

   For models without a tachometer, operate the motorcycle according to the speeds given in Upshift (Acceleration) Gear Speeds: Six Speed and Downshift (Deceleration) Gear Speeds: Six Speed during motorcycle break-in.

2. Up to 500 miles 800 kilometers , vary the engine speed and avoid operating at any steady engine speed for long periods. Engine speed up to 5000 RPM in any gear is permissible.

3. Drive slowly and avoid fast starts at wide open throttle until the engine has warmed up.

4. Avoid lugging the engine by not running the engine at very low speeds in higher gears.
5. Avoid hard braking. New brakes need to be broken-in by moderate use for the first 200 miles 300 kilometers .

Pre-Riding Checklist

⚠WARNING

Read the CONTROLS AND INDICATORS section before riding your motorcycle. Failure to understand the operation of the motorcycle could result in death or serious injury. (00043a)

Before riding your motorcycle at any time, make a general inspection to be sure it is in safe riding condition.

⚠WARNING

Stop the engine when refueling or servicing the fuel system. Do not smoke or allow open flame or sparks near gasoline. Gasoline is extremely flammable and highly explosive, which could result in death or serious injury. (00002a)

⚠WARNING

Avoid spills. Slowly remove filler cap. Do not fill above bottom of filler neck insert, leaving air space for fuel expansion. Secure filler cap after refueling. Gasoline is extremely flammable and highly explosive, which could result in death or serious injury. (00028a)

⚠WARNING

Use care when refueling. Pressurized air in fuel tank can force gasoline to escape through filler tube. Gasoline is extremely flammable and highly explosive, which could result in death or serious injury. (00029a)

1. Verify fuel is present in tank and add fuel if required.
2. Adjust mirrors to proper riding positions.
3. Verify oil is present in oil tank.
4. Check controls to make sure they operate properly. Operate the front and rear brakes, throttle, clutch and shifter. All controls should operate freely without binding.
5. Check steering for proper operation by turning the handlebars through the full operating range. Handlebars should turn smoothly without binding.

⚠WARNING

Be sure tires are properly inflated, balanced and have adequate tread. Inspect your tires regularly and see a Harley-Davidson dealer for replacements. Riding with excessively worn, unbalanced or under-inflated tires can adversely affect stability and handling, which could result in death or serious injury. (00014a)

6. Check tire condition and pressure. Incorrect pressure will result in poor riding characteristics and can affect handling and stability. Refer to tire specifications for correct inflation pressure to use.

⚠WARNING

Be sure headlamp, tail and stop lamp and turn signals are operating properly before riding. Poor visibility of rider to other motorists can result in death or serious injury. (00478b)

7. Check all electrical equipment and switches including the headlamp, stop lamp, turn signals and horn for proper operation.
8. Check for any fuel, oil or hydraulic fluid leaks.
9. Check secondary belt for wear or damage.
10. Service your motorcycle as necessary.

Starting the Engine

General

CAUTION

The engine should be allowed to run slowly for 15-30 seconds. This will allow the engine to warm up and let oil reach all surfaces needing lubrication. Failure to comply can result in engine damage. (00563b)

Do not roll the throttle before starting. Rolling the throttle before starting the motorcycle is unnecessary.

Starting

⚠WARNING

Shift transmission to neutral before starting engine to

prevent accidental movement, which could result in death or serious injury. (00044a)

1. Turn ignition/headlamp key switch to IGNITION position. Do not roll the throttle.

   NOTE:

   The engine lamp will light for approximately 4 seconds and you will hear the fuel pump purr for approximately 2 seconds as it operates to fill the fuel lines with gasoline.

2. See Right Handlebar Controls: Touring Models (typical). Turn the off/run switch to RUN position.

3. Squeeze the clutch lever in against the handgrip.

   NOTE:
   - *To activate the starting system, the clutch interlock circuitry requires the clutch be disengaged, clutch lever pulled in against left handgrip, and/or the transmission be shifted to the neutral position (green neutral lamp lit).*

4. Raise the jiffy stand (required on international models).

5. Press the starter button to start the motorcycle.

6. When the engine has started, you can operate your motorcycle as you normally would after raising the jiffy stand.

NOTES:

- *If the fuel tank becomes completely dry, it may take a few seconds longer to start the motorcycle after filling the tank. It will not be necessary to take any extraordinary measures before starting the motorcycle.*
- *The ABS indicator lamp will remain on until vehicle is moving approximately 3 mph 5 km/h .*

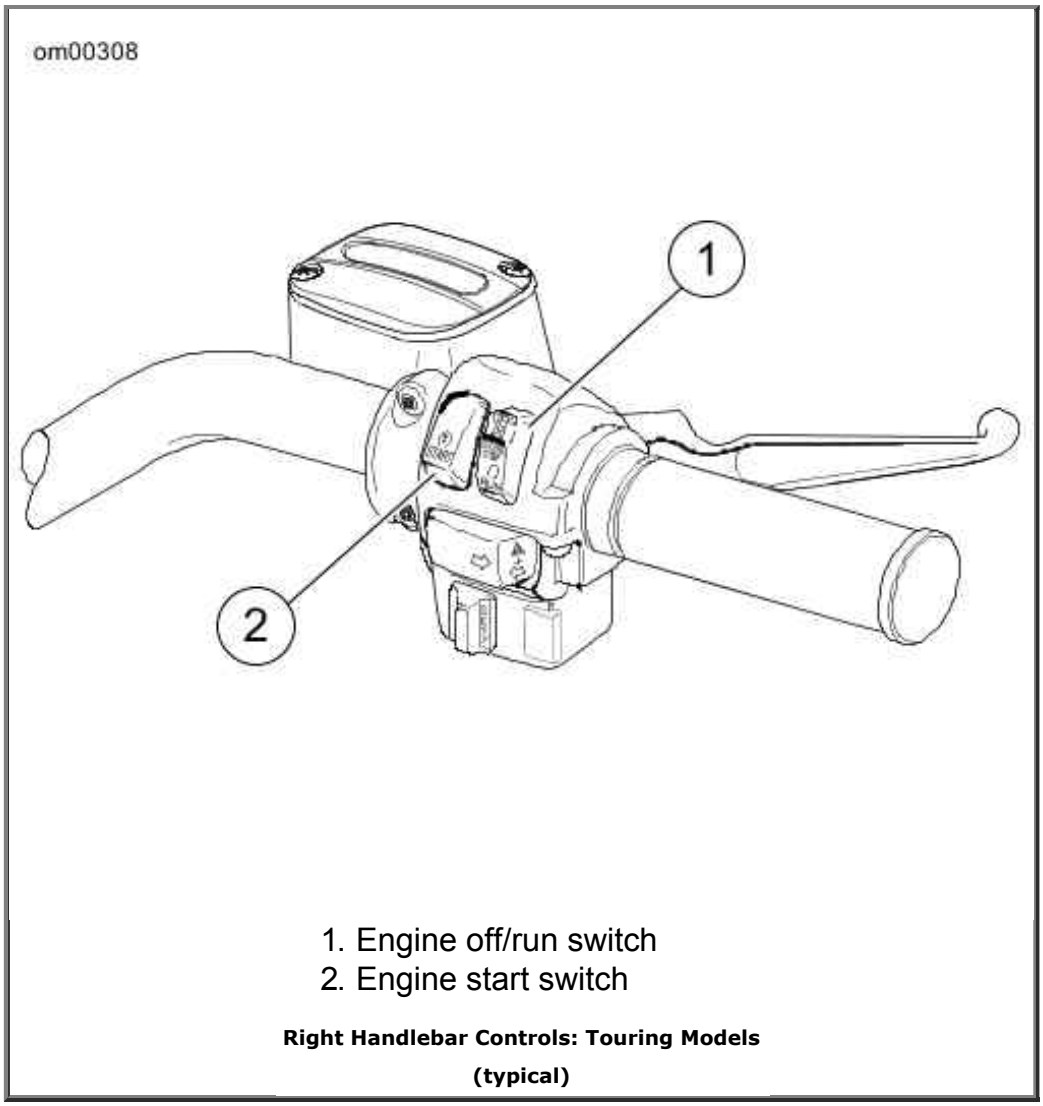

1. Engine off/run switch
2. Engine start switch

Right Handlebar Controls: Touring Models (typical)

Engine Idle Temperature Management System

For those riders who frequently find themselves in riding conditions where the vehicle is subjected to prolonged idle conditions or traffic congestion, the motorcycle is equipped with an Engine Idle Temperature Management System (EITMS) to provide limited cooling of the rear cylinder.

When the engine is in EITMS operation, you may notice a difference in idle cadence. Additionally, there may be a unique exhaust odor. These are both considered to be normal conditions.

Vehicles are delivered from the factory with EITMS disabled. EITMS can be enabled or disabled by the rider using the following procedure.

1. Turn the ignition switch to the ON position (do not start the motorcycle).
2. Push the throttle to roll-off position and hold.
3. See Indicator Lamps: Touring Models. After approximately 3 seconds, the cruise indicator lamp will either flash green (EITMS enabled) or red (EITMS disabled).
4. Repeat the procedure as needed to enable or disable EITMS.

Stopping the Engine

1. Stop the engine by turning OFF the engine stop switch on right handlebar.

2. Turn OFF the ignition/headlamp key switch. If the engine should be stalled or stopped in any way, turn off the ignition/headlamp key switch at once to prevent battery discharge.

Shifting Gears

Getting Started

CAUTION

The clutch must be fully disengaged before attempting a gear shift. Failure to fully disengage the clutch can result in equipment damage. (00182a)

The shift pattern is first gear down, next five gears up.

1. With motorcycle engine running and jiffy stand retracted, pull the clutch hand lever in against handlebar grip to fully disengage clutch.
2. Press the foot shift lever down to end of its travel and release. The transmission is now in first gear.
3. To start forward motion, ease out the clutch lever slowly and at the same time, open throttle gradually.

Upshift (Acceleration)

Refer to Upshift (Acceleration) Gear Speeds: Six Speed. Engage second gear after the motorcycle has reached at the appropriate shifting speed.

Upshift (Acceleration) Gear Speeds: Six Speed

GEAR CHANGE	MPH	KPH
First to second	15	25
Second to third	25	40
Third to fourth	35	55
Fourth to fifth	45	70
Fifth to sixth	55	85

1. Close the throttle.
2. Disengage the clutch (pull clutch lever in).
3. See Shifting Sequence: Upshift. Lift the gear shift lever up to the end of its travel and release.
4. Ease out the clutch lever and gradually open the throttle.
5. Repeat the previous steps to engage third, fourth, fifth, and sixth gears.

NOTES:

- *Disengage the clutch completely before each gear change.*
- *Partially close the throttle so the engine will not drag when clutch is again engaged (clutch lever released).*

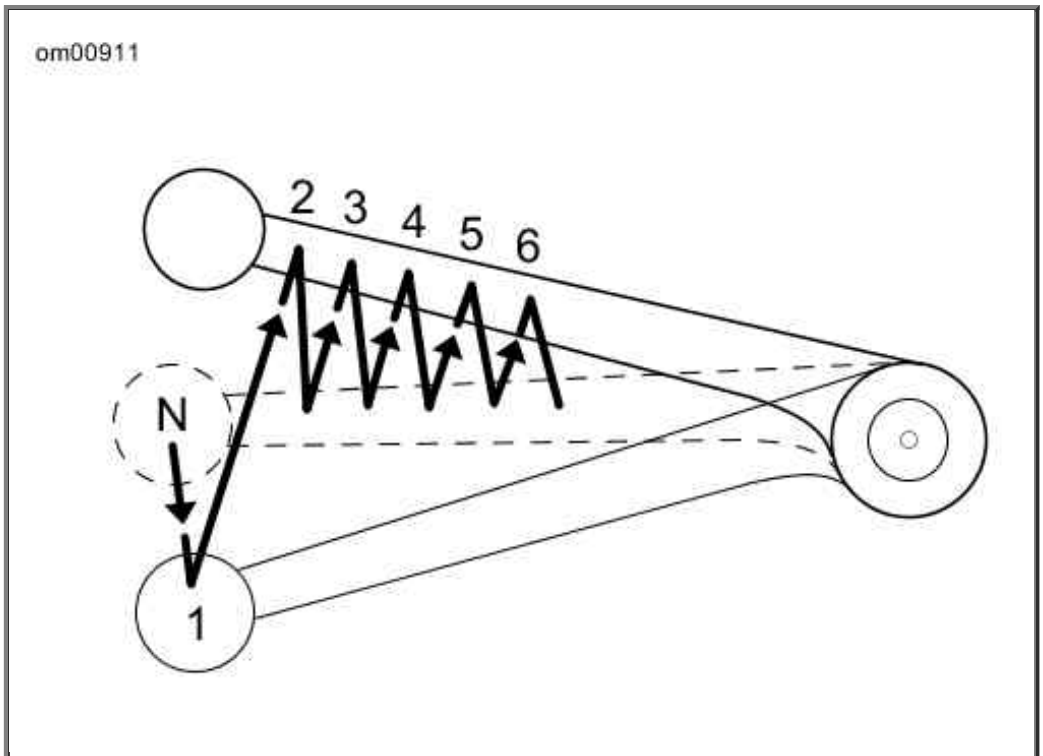

Shifting Sequence: Upshift

Downshift (Deceleration)

⚠WARNING

Do not downshift at speeds higher than those listed in the Changing Gear Speeds table. Shifting to lower gears when speed is too high can cause the rear wheel to lose traction and lead to loss of vehicle control, which could result in death or serious injury. (00045a)

Gear shift pattern is first gear down; next five gears up. Refer to Downshift (Deceleration) Gear Speeds: Six Speed for shifting speeds.

Downshift (Deceleration) Gear Speeds: Six Speed

GEAR CHANGE	MPH	KPH
Sixth to fifth	50	80
Fifth to fourth	40	65
Fourth to third	30	50
Third to second	20	30
Second to first	10	15

NOTE:

The shifting points shown in the tables are recommendations. Vehicle owners may determine that their own individual shifting patterns may differ than those stated and are additionally appropriate for individual riding styles.

See Shifting Sequence: Downshift. When engine speed decreases, as in climbing a hill or running at a reduced speed, shift to the next lower gear while partially closing the throttle so the engine accelerates as soon as the clutch lever is released.

NOTES:

- *Disengage the clutch completely before each gear change.*
- *Partially close the throttle so the engine will not drag when clutch is again engaged (clutch lever released).*

CAUTION

Shift to neutral before stopping engine. Shifting mechanism can be damaged by shifting gears while engine is stopped. (00183a)

The gear shifter mechanism permits shifting the transmission to neutral from either first or second gear.

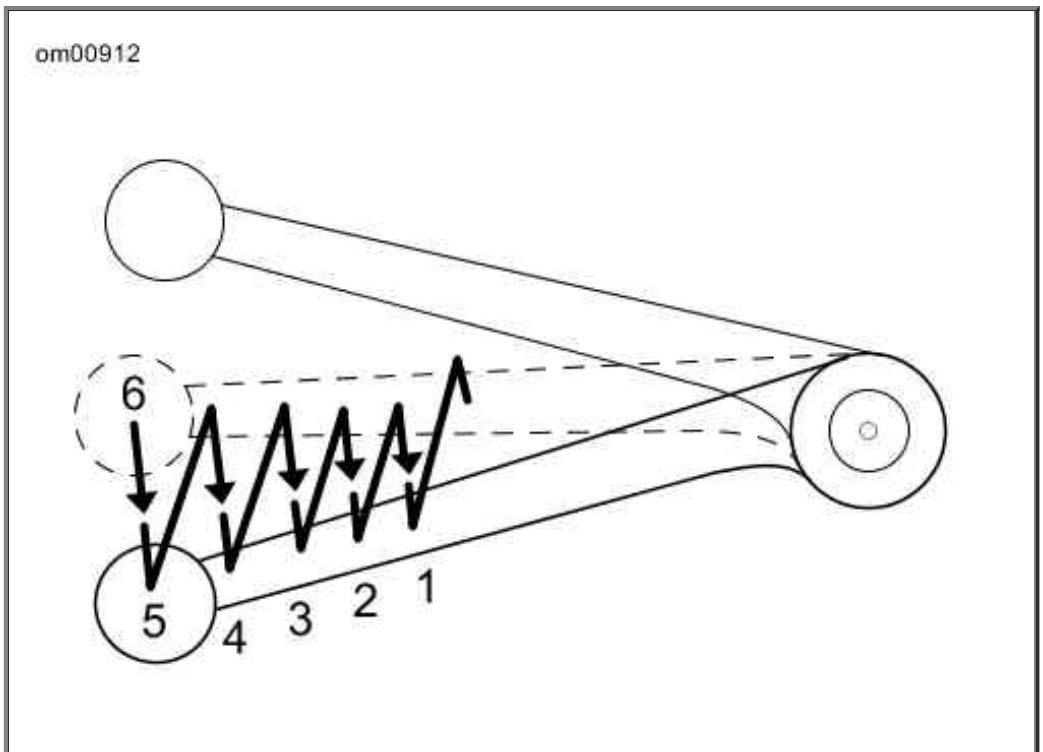

Shifting Sequence: Downshift

Maintenance and Lubrication

Safe Operating Maintenance

⚠WARNING

Perform the service and maintenance operations as indicated in the regular service interval table. Lack of

regular maintenance at the recommended intervals can affect the safe operation of your motorcycle, which could result in death or serious injury. (00010a)

Good maintenance creates a safe motorcycle. A careful check of certain equipment must be made after periods of storage. Also, frequently inspect the motorcycle between the regular service intervals to determine if additional maintenance is necessary.

Check the following items:

1. Tires for correct pressure, abrasions or cuts.
2. Belt and primary chain for proper tension, wear or damage.
3. Brakes, steering and throttle for responsiveness and freedom from binding.
4. Brake fluid level and condition. Hydraulic lines and fittings for leaks. Also, check brake pads and discs for wear.
5. Cables for fraying or crimping and free operation.
6. Engine oil and primary chaincase/transmission fluid levels.
7. Headlamp, tail lamp, brake lamp and turn signals for proper operation.

Break-in Maintenance

NOTE:

The performance of new motorcycle initial service is required to keep your new motorcycle warranty in force and to assure proper emissions system operation.

Refer to Regular Service Intervals: 2008 Touring Models. After a new motorcycle has been ridden its first 1000 miles 1600 kilometers , it should be taken to an authorized Harley-Davidson dealer for initial service operations.

Engine Lubrication

CAUTION

Do not switch lubricant brands indiscriminately because some lubricants interact chemically when mixed. Use of inferior lubricants can damage the engine. (00184a)

Engine oil is a major factor in the performance and service life of the engine. Always use the proper grade of oil for the lowest temperature expected before the next scheduled oil change. Refer to Recommended Engine Oils. Your authorized dealer has the proper oil to suit your requirements.

If it is necessary to add oil and Harley-Davidson oil is not available, use an oil certified for diesel engines. Acceptable diesel engine oil designations include: CF-4, CG-4, CH-4 and CI-4.

The preferred viscosities for the diesel engine oils in descending order are: 20W50, 15W40 and 10W40.

At the first opportunity, see an authorized dealer to change back to 100 percent Harley-Davidson oil.

Recommended Engine Oils

H-D TYPE	VISCOSITY	H-D RATING	LOWEST AMBIENT TEMPERATURE	COLD WEATHER STARTS BELOW 50° F 10° C
H-D Multi-grade	SAE 10W40	HD 360	Below 40° F 4° C	Excellent
H-D Multi-grade	SAE 20W50	HD 360	Above 40° F 4° C	Good
H-D Regular Heavy	SAE 50	HD 360	Above 60° F 16° C	Poor
H-D Extra Heavy	SAE 60	HD 360	Above 80° F 27° C	Poor

Checking Oil Level: Touring Models

CAUTION

Oil level cannot be accurately measured on a cold engine. For pre-ride inspection, with motorcycle leaning on jiffy stand on level ground, oil should register on dipstick between arrows when engine is cold. Do not add oil to bring the level to the FULL mark on a COLD engine. (00185a)

For dipstick location, see Engine Oil Filler Cap.

Engine Oil Filler Cap

Oil Level Cold Check

Perform engine oil level **COLD CHECK** as follows:

1. For preride inspection, place vehicle on level ground and rest the vehicle on its jiffy stand (unless sidecar is attached).
2. Turn filler plug/dipstick counterclockwise. Remove and wipe off the dipstick. Insert the dipstick back into the oil pan with the plug screwed completely into the fill spout.
3. See Engine Oil Dipstick. Remove the dipstick and verify the level of the oil. The correct oil level should register between the two marks on the dipstick. If sidecar is attached, check oil level using the opposite side of dipstick as shown in Engine Oil Dipstick (Sidecar Use).

NOTE:

If oil level is at or below the lower arrow, add only enough oil to bring the level to the middle of the two marks on the dipstick.

Oil Level Hot Check

Perform engine oil level **HOT CHECK** as follows:

1. Ride motorcycle until engine is at normal operating temperature.
2. Place vehicle on level ground and rest the vehicle on its jiffy stand (unless sidecar is attached). Allow engine to idle for 1-2 minutes. Turn engine off.
3. Turn filler plug/dipstick counterclockwise. Remove and wipe off the dipstick. Insert it back with the plug screwed completely into the fill spout.
4. See Engine Oil Dipstick. Remove the dipstick and note the level of the oil. If sidecar is attached, check oil level using the opposite side of dipstick as shown in Engine Oil Dipstick (Sidecar Use). Add only enough oil to bring the level to the FULL mark on the dipstick. Do not overfill.

   NOTE:

   Refer to Recommended Engine Oils. Use only recommended oil specified in Engine Lubrication.

5. Start engine and carefully check for oil leaks around drain plug and oil filter.

Engine oil level should be checked only when engine is at normal operating temperature.

NOTE:

The engine will require a longer warm up period in colder weather.

CAUTION

Do not allow hot oil level to fall below Add/Fill mark on dipstick. Doing so can result in equipment damage and/or equipment malfunction. (00189a)

CAUTION

Do not overfill oil tank. Doing so can result in oil carryover to the air cleaner leading to equipment damage and/or equipment malfunction. (00190a)

- Check engine oil supply at each complete fuel refill.
- Refer to Regular Service Intervals: 2008 Touring Models. Oil should be changed at specified intervals in normal service at warm or moderate temperatures.
- Oil change intervals should be shorter in cold weather or severe operating conditions. See Winter Lubrication.

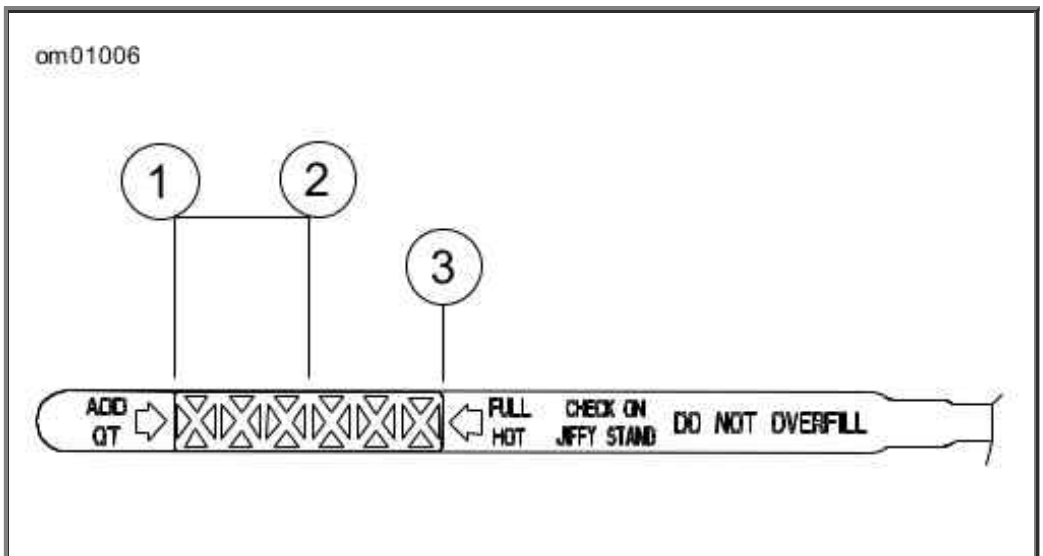

1. ADD QT (lower) mark
2. Cold check level
3. FULL (hot check) mark

Engine Oil Dipstick

NOTES:

The engine oil dipstick has different markings on its two sides. Engine Oil Dipstick shows the engine oil level when the motorcycle is on its jiffy stand. Engine Oil Dipstick (Sidecar Use) shows the engine oil level with a sidecar attached (motorcycle upright).

For cold check level, do not exceed the midpoint (2) when filling with oil.

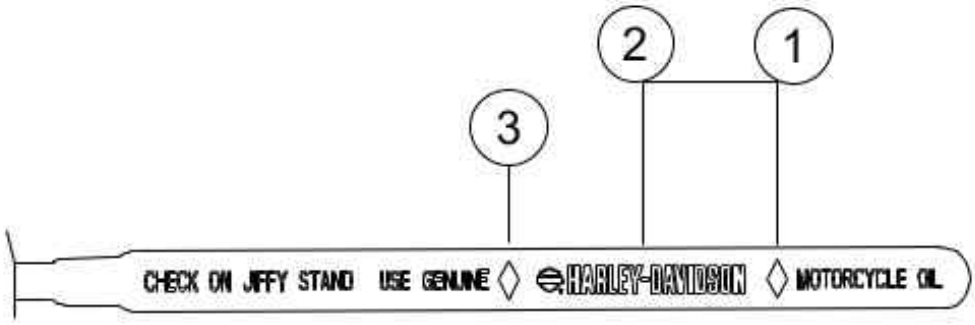

1. ADD QT (lower) mark
2. Cold check level
3. FULL (hot check) mark

Engine Oil Dipstick (Sidecar Use)

Changing Oil and Oil Filter: Touring Models

CAUTION

Do not switch lubricant brands indiscriminately because some lubricants interact chemically when mixed. Use of inferior lubricants can damage the engine. (00184a)

Twin Cam equipped vehicles require the premium oil filter (Part No. 63798-99A Chrome or Part No. 63731-99A Black).

Refer to Regular Service Intervals: 2008 Touring Models. Oil should be changed after the first 1000 miles 1600 kilometers for a new engine and at regular intervals in normal service at warm or moderate temperatures.

1. Ride motorcycle until engine is warmed up to normal operating temperature. Turn engine off.

2. Locate oil filler plug/dipstick on right side of vehicle at top of transmission case. Turn filler plug/dipstick counterclockwise to remove.

3. See Oil Pan. Locate oil drain plug at front left side of the oil pan. Remove the oil drain plug. Do not remove Allen plug. Allow oil to drain completely.

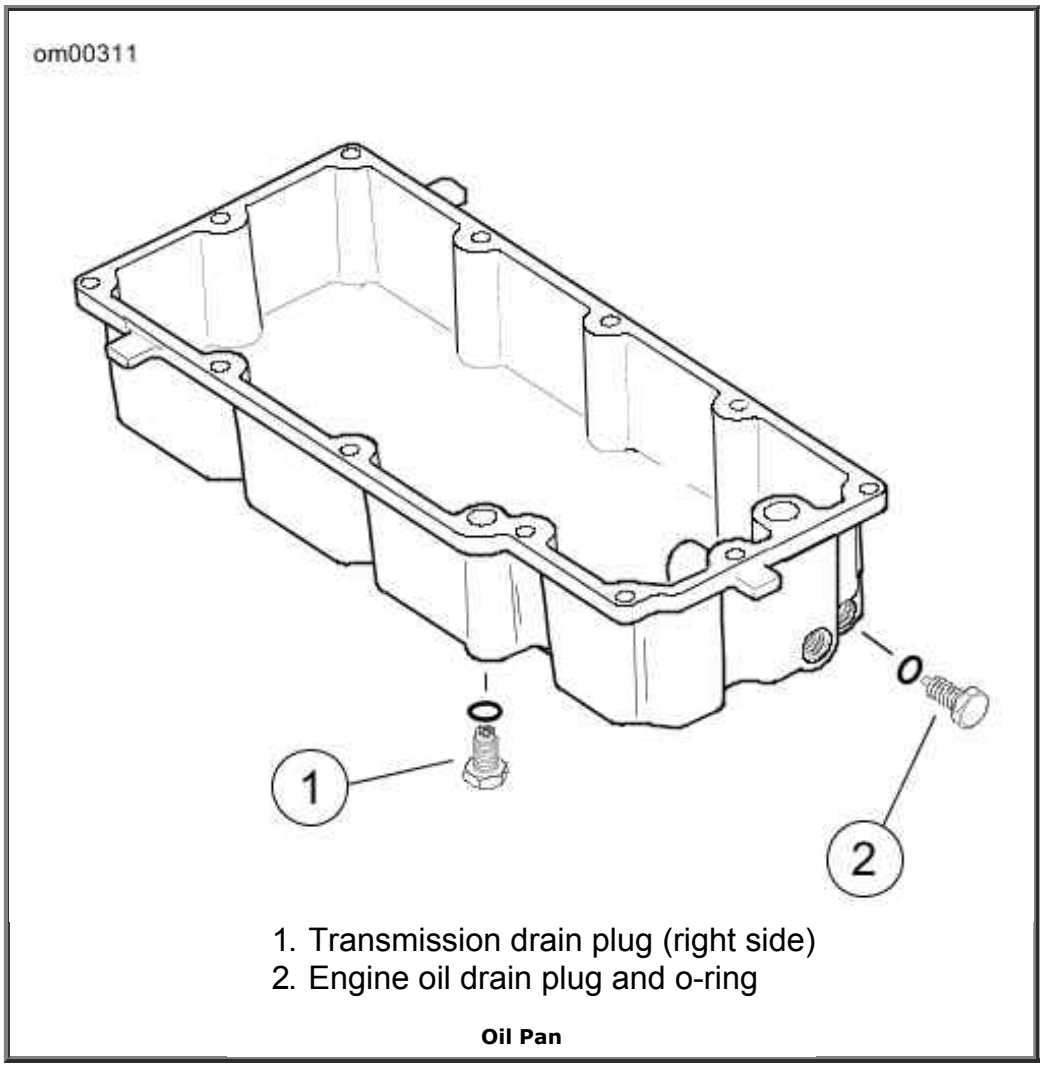

1. Transmission drain plug (right side)
2. Engine oil drain plug and o-ring

Oil Pan

4. Inspect the oil drain plug o-ring for cuts, tears or signs of deterioration. Replace as necessary.

⚠WARNING

Be sure that no lubricants or fluids get on tires, wheels or brakes when changing fluid. Traction can be adversely affected, which could result in loss of control of the motorcycle and death or serious injury. (00047d)

CAUTION

Use Harley-Davidson oil filter wrench for filter removal. This tool can prevent damage to crankshaft position sensor and/or sensor cable. (00192b)

5. See Oil Filter Wrench (Part No. HD-42311). Remove the oil filter using the OIL FILTER WRENCH HD-42311 or OIL FILTER WRENCH HD-44067-A . These tools allow easy removal of the oil filter without risk of damage to the crankshaft position sensor or cable.

6. Place the jaws of the wrench over the oil filter with the tool oriented vertically. Using a 3/8 inch drive with a 4 inch extension, turn wrench in a counterclockwise direction. Do not use with air tools.

7. Clean the oil filter mount flange of any old gasket material.

   NOTE:

   Dispose of oil and oil filter in accordance with local regulations.

8. See Applying Thin Oil Film. Lubricate gasket with clean engine oil and install **new** oil filter on filter mount. Hand tighten oil filter 1/2-3/4 turn after gasket first contacts filter mounting surface. Do not use OIL FILTER WRENCH HD-42311 for oil filter installation.

9. Install engine oil drain plug and tighten to 14-21 ft-lbs (19.0-28.5 Nm).

10. Refer to Recommended Engine Oils. With vehicle resting on jiffy stand, initially add 3.5 quarts 3.3 liters of engine oil. Use the proper grade of oil for the lowest temperature expected before the next oil change.

11. Verify proper oil level. See Checking Oil Level: Touring Models.

    a. Check engine oil level using **COLD CHECK** procedure.

    b. Start engine and carefully check for oil leaks around drain plug and oil filter.

    c. Check engine oil level using **HOT CHECK** procedure.

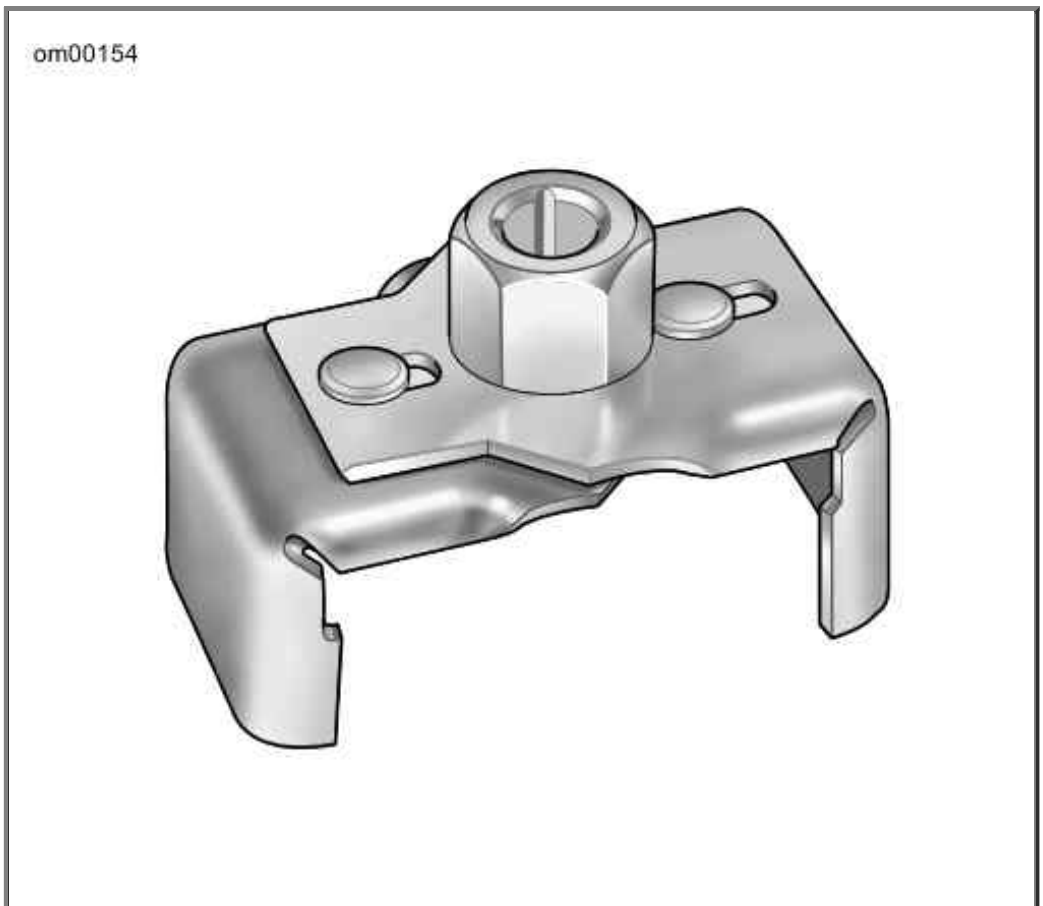

Oil Filter Wrench (Part No. HD-42311)

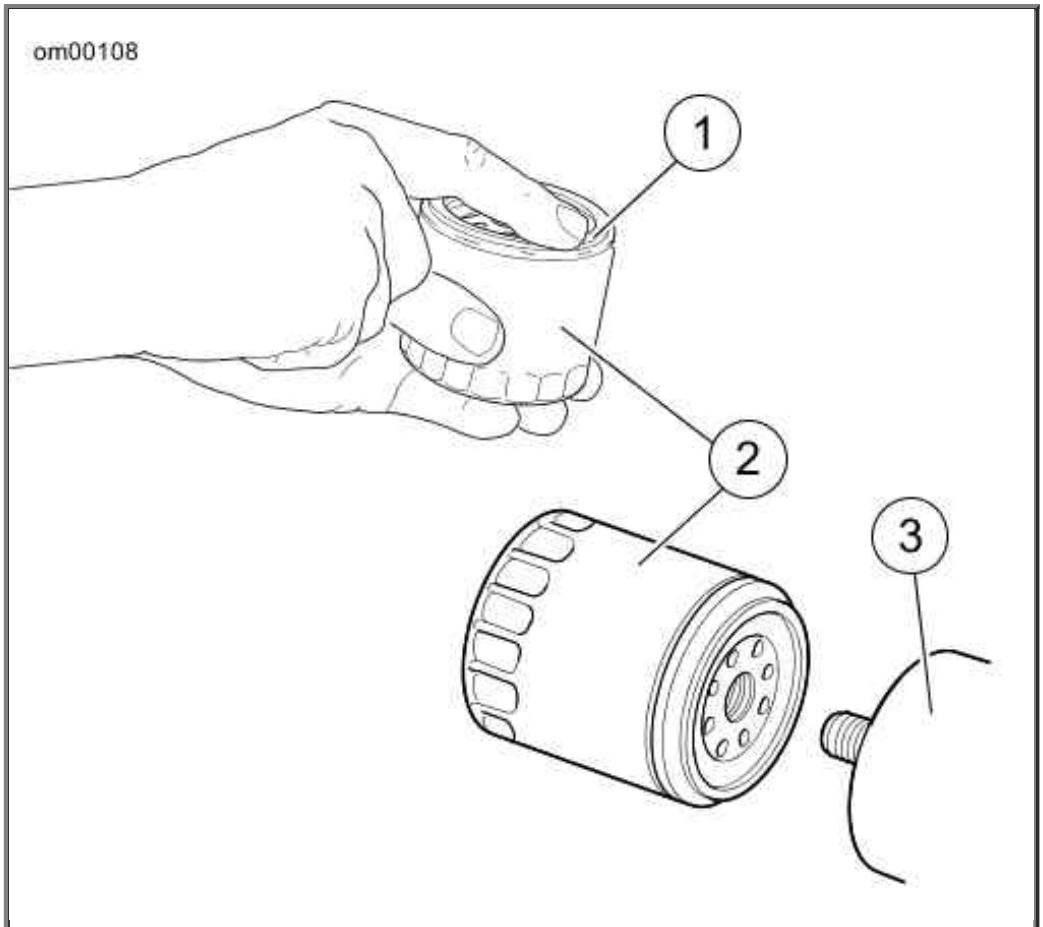

1. Thin oil film ONLY
2. Oil filter
3. Mounting plate

Applying Thin Oil Film

Winter Lubrication

In colder climates, the engine oil should be changed often. If motorcycle is used frequently for short trips, less than 15 miles 24 kilometers , in ambient temperatures below 60° F 16° C , oil change intervals should be reduced to 1500 miles 2400 kilometers . Motorcycles used only for short runs must have a thorough tank flush-out before **new** oil is put in. The tank flush-out should be performed by an authorized dealer or qualified technician.

NOTE:

The further below freezing the temperature drops, the shorter the oil change interval should be.

Water vapor is a normal by-product of combustion in any engine. During cold weather operation, some of the water vapor condenses to liquid form on the cool metal surfaces inside the engine. In freezing weather this water will become slush or ice and, if allowed to accumulate too long, may block the oil lines and cause damage to the engine.

If the engine is run frequently and allowed to thoroughly warm up, most of this water will become vapor again and will be blown out through the crankcase breather.

If the engine is not run frequently and allowed to thoroughly warm up, this water will accumulate, mix with the engine oil and form a sludge that is harmful to the engine.

Transmission Lubrication: Touring Models

General

The transmission lubricant level should be checked monthly.

Refer to Regular Service Intervals: 2008 Touring Models. The transmission should be drained and refilled with fresh lubricant at specified intervals.

NOTE:

When checking the transmission lubricant level, the motorcycle should be leaning on the jiffy stand. Allow a short period of time to equalize lubricant level in the transmission compartments.

Check Lubricant Level

1. Park motorcycle on its jiffy stand.
2. See Transmission Filler Plug/Dipstick Lubricant Level. Remove the threaded filler plug/dipstick.
3. See Transmission Filler Plug/Dipstick Location. Wipe off filler plug/dipstick. Place in filler hole and remove. (Dipstick should rest on lip of filler. Do not screw in.) Lubricant level should be between the full and low marks on the plug/dipstick when removed.

⚠WARNING

Be sure that no lubricants or fluids get on tires, wheels or brakes when changing fluid. Traction can be adversely affected, which could result in loss of control of the motorcycle and death or serious injury. (00047d)

CAUTION

When draining or adding lubricant, do not allow dirt, debris or other contaminants to enter the engine. (00198a)

4. Add lubricant, if necessary. Do not overfill or leakage may occur. When filling the transmission, use GENUINE Harley-Davidson FORMULA+ TRANSMISSION AND PRIMARY CHAINCASE LUBRICANT (Part No. 99851-05 quart). The transmission fluid capacity is approximately 32 fluid ounces 0.95 liters .
5. Inspect o-ring for tears or damage. Replace if required. Wipe any foreign material from plug.
6. Install threaded filler/check plug and tighten clockwise to 25-75 in-lbs (2.8-8.5 Nm).

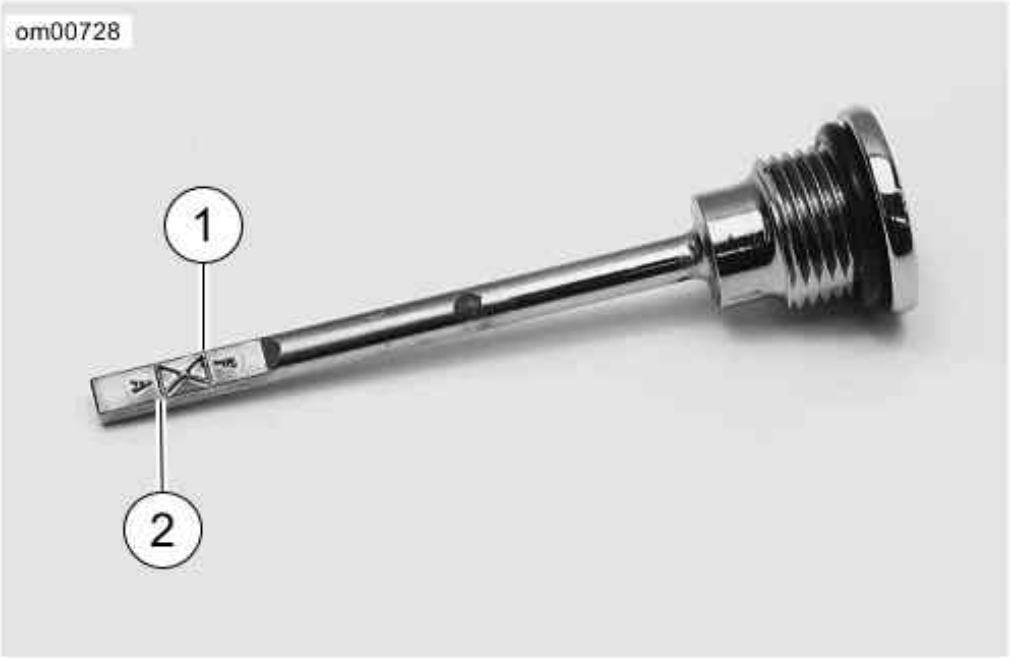

1. FULL
2. ADD

Transmission Filler Plug/Dipstick Lubricant Level

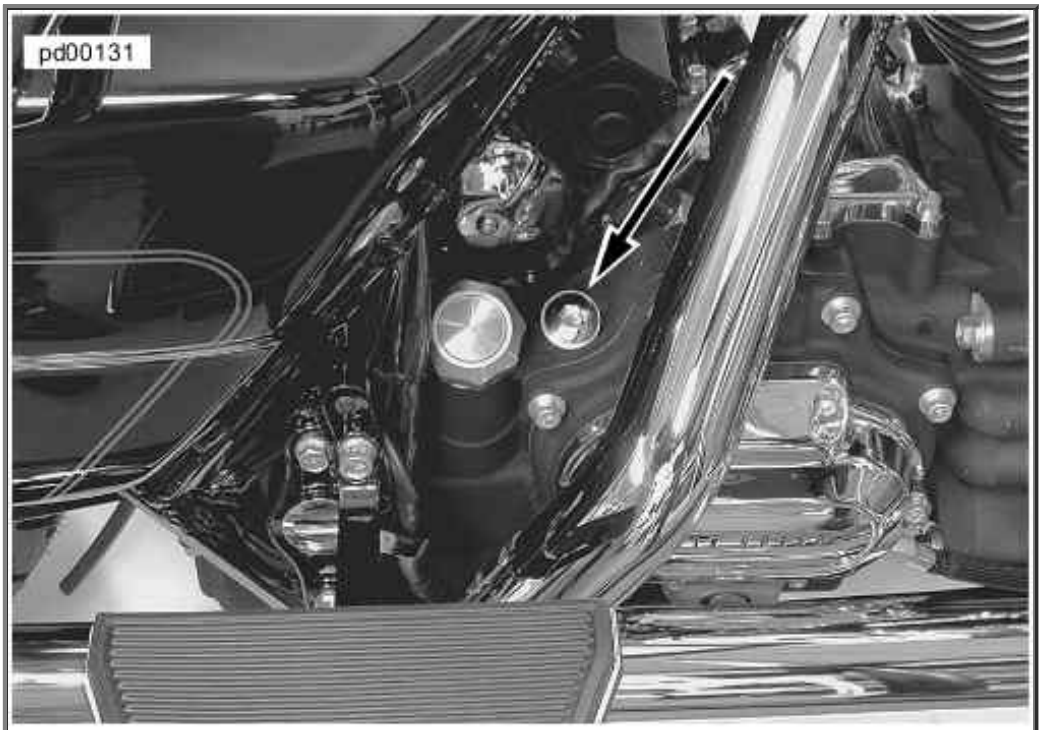

Transmission Filler Plug/Dipstick Location

Changing Transmission Fluid

1. See Transmission Filler Plug/Dipstick Lubricant Level. Remove the threaded filler plug/dipstick.
2. See Oil Pan. Remove transmission drain plug from the right side of the oil pan and drain

lubricant into a suitable container.

CAUTION

When draining or adding lubricant, do not allow dirt, debris or other contaminants to enter the engine. (00198a)

⚠WARNING

Be sure that no lubricants or fluids get on tires, wheels or brakes when changing fluid. Traction can be adversely affected, which could result in loss of control of the motorcycle and death or serious injury. (00047d)

NOTE:

Dispose of transmission lubricant in accordance with local regulations.

3. Inspect o-ring for tears or damage on the drain plug. Replace if required. Wipe any foreign material from plug.
4. Install drain plug and tighten to 14-21 ft-lbs (19.0-28.5 Nm). Fill the transmission with 32 fl. oz. 0.95 liters of GENUINE Harley-Davidson FORMULA+ TRANSMISSION AND PRIMARY CHAINCASE LUBRICANT (Part No. 99851-05 quart).

   NOTE:

   Do not overfill or leakage may occur. The transmission fluid capacity is approximately 32 fl. oz. 0.95 liters .

5. Install threaded filler plug/dipstick and tighten clockwise to 25-75 in-lbs (2.8-8.5 Nm).
6. Start engine and carefully check for oil leaks around drain plug.

Chaincase Lubricant: Touring Models

General

Refer to Regular Service Intervals: 2008 Touring Models. The chaincase lubricant should be drained and refilled with fresh lubricant at specified intervals.

NOTE:

When checking the chaincase lubricant, motorcycle should be standing STRAIGHT UP, not leaning on the jiffy stand. Keep motorcycle upright for a short period of time to equalize lubricant level in the chaincase compartment.

Check Lubricant Level

---

1. Ride motorcycle until engine is warmed up to normal operating temperature.
2. When the engine reaches normal operating temperature, turn the engine off and position

motorcycle STRAIGHT UP and LEVEL.

3. See Primary Chaincase Cover. Remove five screws (2) (with captive washers) to free clutch inspection cover (1) from primary chaincase cover.

4. Remove gasket and discard.

5. If the fluid level can be seen, it is adequate. Otherwise, pour enough GENUINE Harley-Davidson FORMULA+ TRANSMISSION AND PRIMARY CHAINCASE LUBRICANT (Part No. 99851-05, U.S. quart) in through the clutch inspection cover opening until it is visible along the bottom portion of the clutch assembly.

6. Refer to procedure in Changing Chaincase Lubricant to install gasket and clutch inspection cover.

CAUTION

Do not overfill the primary chaincase with lubricant. Overfilling can cause rough clutch engagement, incomplete disengagement, clutch drag and/or difficulty in finding neutral at engine idle. (00199b)

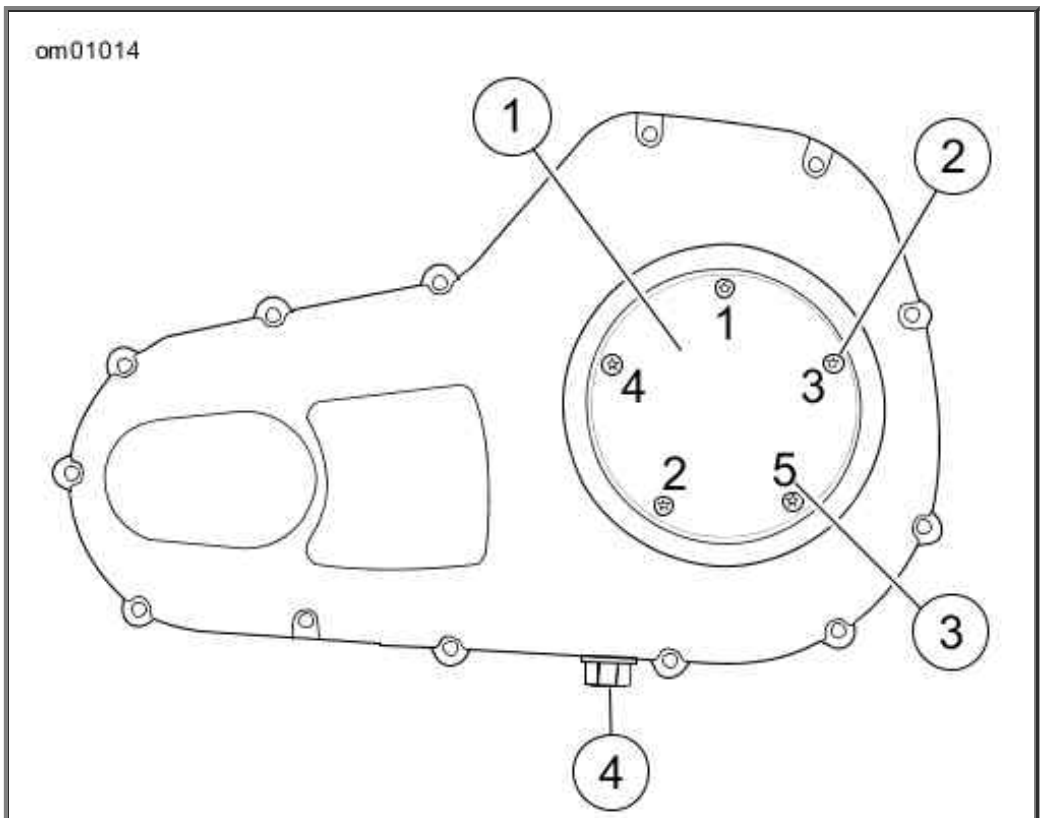

1. Clutch inspection cover
2. Screws with captive washer
3. Clutch cover torque sequence
4. Drain plug

Primary Chaincase Cover

Changing Chaincase Lubricant

CAUTION

When draining or adding lubricant, do not allow dirt, debris or other contaminants to enter the engine. (00198a)

1. Ride motorcycle until engine is warmed up to normal operating temperature.
2. See Primary Chaincase Cover and Removing Chaincase Drain Plug. Remove magnetic drain plug at bottom of primary chaincase cover. Drain lubricant into suitable container.

   NOTE:

   Dispose of chaincase lubricant in accordance with local regulations.

3. See Clutch Cover. Remove five screws (with captive washers) to free clutch inspection cover from primary chaincase cover.
4. Clean drain plug. Remove debris from magnet and inspect o-ring for cuts, tears, or signs of deterioration. Replace as necessary. Install drain plug and tighten to 14-21 ft-lbs (19.0-28.5 Nm). If plug has accumulated excess debris, inspect the condition of chaincase components.
5. Pour the appropriate amount of GENUINE Harley-Davidson FORMULA+ TRANSMISSION AND PRIMARY CHAINCASE LUBRICANT (Part No. 99851-05 quart) in through the clutch inspection cover opening. A wet primary change will require 38 fl. oz. 1177 ml . A dry fill after complete disassembly of the primary requires 45 fl. oz. 1330 ml .

CAUTION

Do not overfill the primary chaincase with lubricant. Overfilling can cause rough clutch engagement, incomplete disengagement, clutch drag and/or difficulty in finding neutral at engine idle. (00199b)

CAUTION

When draining or adding lubricant, do not allow dirt, debris or other contaminants to enter the engine. (00198a)

⚠WARNING

Be sure that no lubricants or fluids get on tires, wheels or brakes when changing fluid. Traction can be adversely affected, which could result in loss of control of the motorcycle and death or serious injury. (00047d)

NOTE:

Use only GENUINE Harley-Davidson FORMULA+ TRANSMISSION AND PRIMARY CHAINCASE LUBRICANT (Part No. 99851-05 quart).

6. Install clutch inspection cover and new gasket as follows:

a. Thoroughly wipe all lubricant from the cover mounting surface and groove in chaincase.

b. Position gasket in groove in primary chaincase cover and press each of the nubs on gasket into the groove. The nubs will retain the seal in position.

c. Insert screw (with captive washer) through clutch inspection cover and thread it into the top cover screw hole.

d. Start the remaining four screws (with captive washers).

e. Tighten screws to 84-108 in-lbs (9.5-12.2 Nm). Follow torque sequence shown in Primary Chaincase Cover.

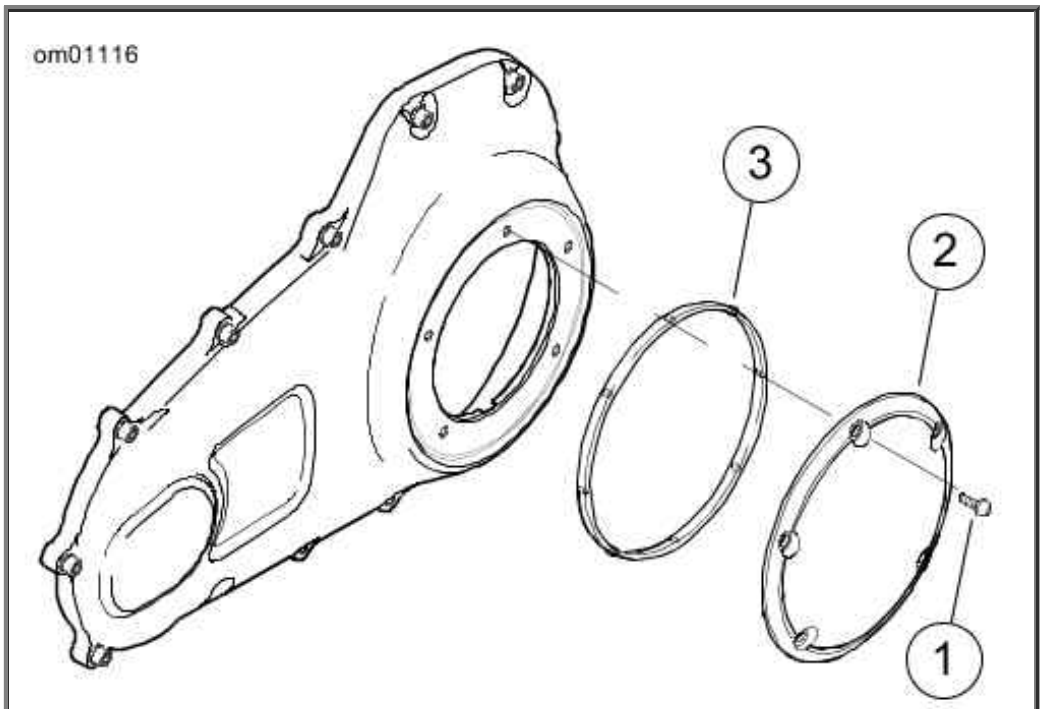

1. TORX screw with captive washer (5)
2. Clutch inspection cover
3. Seal

Clutch Cover

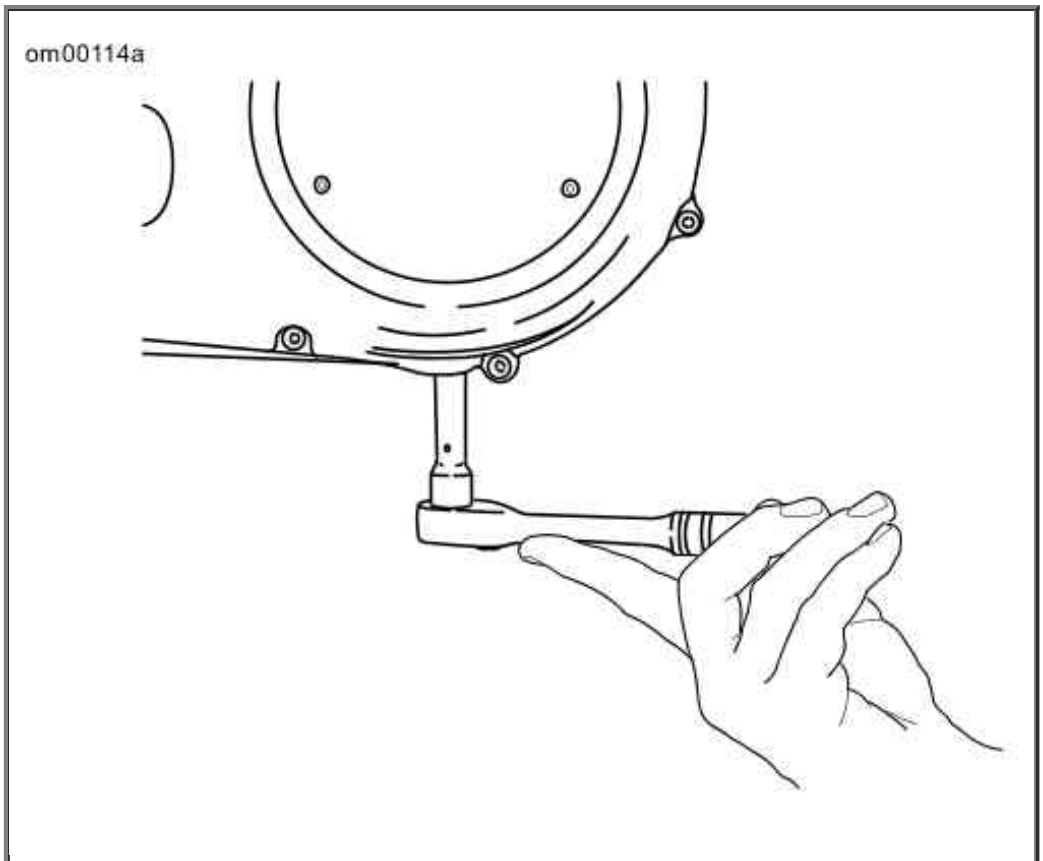

Removing Chaincase Drain Plug

Rear Drive Belt: Touring Models

General

The inner tooth surface of the secondary belt has a thin coating of polyethylene lubricant. During initial operation, this coating will wear off as it is burnished into the belt fabric. This is a normal condition and not an indication of belt wear.

Refer to Regular Service Intervals: 2008 Touring Models. Belt tension is set at the factory and should be checked after the first 1000 miles 1600 kilometers and at proper intervals thereafter.

Checking Deflection

See Check Belt Deflection. Check belt deflection at the loosest spot in the belt with the transmission in neutral and the motorcycle at ambient temperature. With 10 PSI in the rear shocks and the motorcycle on its jiffy stand, use the BELT TENSION GAUGE HD-35381 to apply 10 lbs. 4.5 kg of force at the midpoint of the bottom belt strand.

Belt deflection should be within specification as shown in Belt Deflection: 2008 Touring Models. If belt tension adjustment is necessary, see a Harley-Davidson dealer or follow the instructions given in the applicable Service Manual.

⚠WARNING

Be sure wheel and brake caliper are aligned. Riding with a

misaligned wheel or brake caliper can cause the brake disc to bind and lead to loss of control, which could result in death or serious injury. (00050a)

Check rear brake caliper position on rear brake disc. Disc should run true within brake caliper.

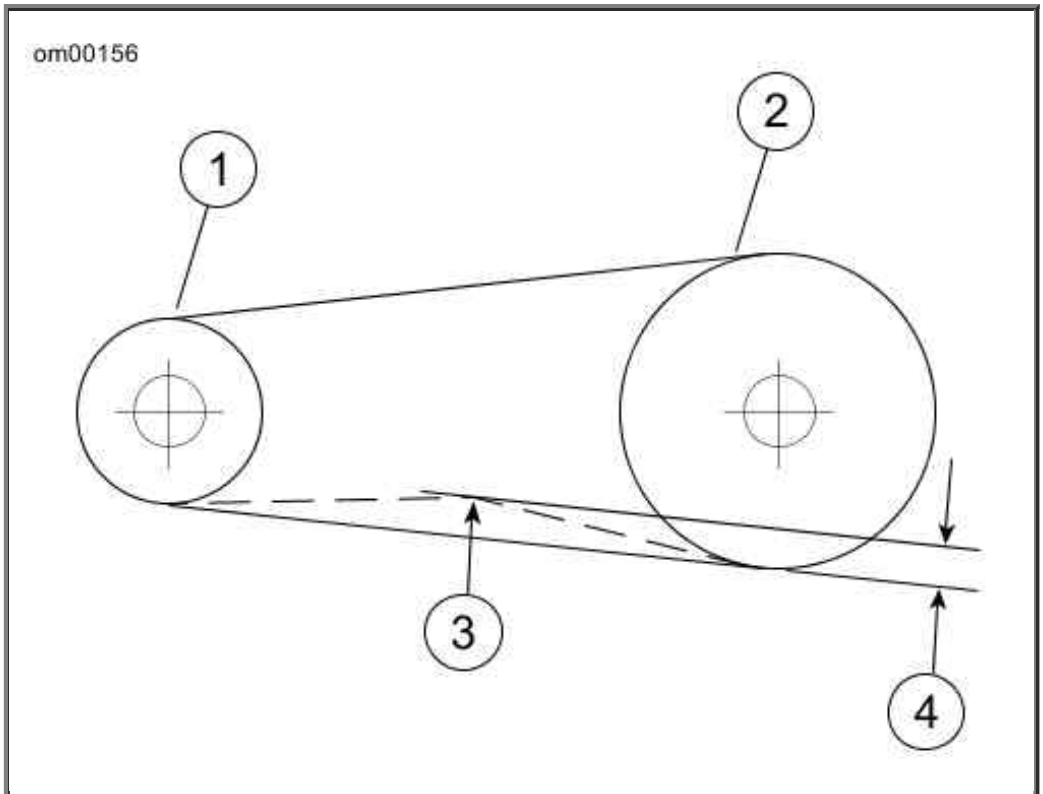

1. Transmission sprocket
2. Rear wheel sprocket
3. Force of 10 lbs (4.5 kg)
4. Deflection

Check Belt Deflection

Belt Deflection: 2008 Touring Models

MODELS	INCHES	MILLIMETERS
FLHT, FLHR, FLHTCU, FLHTC, FLHRC, FLTR	3/8-7/16	9.6-11.1
FLHX	1/4-5/16	6.4-7.9

Chassis Lubrication: Touring Models

Refer to Regular Service Intervals: 2008 Touring Models for all maintenance schedules.

CAUTION

Do not switch lubricant brands indiscriminately because some lubricants interact chemically when mixed. Use of inferior lubricants can damage the engine. (00184a)

1. Use recommended special purpose grease for steering head bearings. Use a multipurpose chassis grease for other applications.
2. Lubricate clutch control cable at proper intervals.
3. Lubricate front brake hand lever and clutch control hand lever only if necessary.
4. Inspect rear fork pivot shaft bearings.
5. Pack the steering head bearings with fresh grease at proper intervals.
6. Lubricate the jiffy stand mechanism with LOCTITE AEROSOL ANTI-SEIZE at proper intervals.

NOTE:

For model specific information regarding the chassis lubrication, refer to the appropriate Service Manual or see a Harley-Davidson dealer.

Oil Applications

Refer to Regular Service Intervals: 2008 Touring Models for all control connections and parts. Vehicle should be oiled at regular intervals, particularly after washing motorcycle or driving in wet weather.

Front Fork Oil

Refer to Regular Service Intervals: 2008 Touring Models. Have a Harley-Davidson dealer drain the front fork oil and refill at proper intervals. If fork does not appear to be working properly or an appreciable amount of oil leakage should develop, see a Harley-Davidson dealer. If there is insufficient oil in either side of fork, the rebound action will be incorrect.

Fuel Filter

Fuel injected motorcycles have a fuel filter attached to the fuel pump.

NOTE:

For model specific information regarding fuel filter maintenance, refer to the appropriate Service Manual or see a Harley-Davidson dealer.

Clutch

CAUTION

The clutch control cable must be oiled and adjusted periodically to compensate for lining wear. See Service Interval Table. Failure to oil and adjust the clutch control cable can result in equipment damage. (00203a)

The need for attention to clutch and controls will be indicated by the clutch slipping under load or dragging when released. In this situation, check the control cable adjustment first. See a Harley-Davidson dealer for proper service.

Hydraulic Lifters

The hydraulic lifters are self-adjusting. They automatically adjust length to compensate for engine expansion and valve mechanism wear. This keeps the valve mechanism free of lash when the engine is running.

When starting an engine which has been turned off even for a few minutes, the valve mechanism may be slightly noisy until the hydraulic units completely refill with oil. If at any time the valve mechanism becomes abnormally noisy, other than for a short period immediately after engine is started, it is an indication that one or more of the hydraulic units may not be functioning properly.

Always check the oil supply in the oil tank first since normal circulation of oil through the engine is necessary for proper operation of the hydraulic units.

If there is oil in the tank, the units may not be functioning properly because of dirt in the oil supply passages leading to the lifter units. See a Harley-Davidson dealer for service.

Front Fork Bearings

⚠WARNING

Adjustments to front fork bearings should be performed by a Harley-Davidson dealer. Improperly adjusted bearings can adversely affect handling and stability, which could result in death or serious injury. (00051a)

Refer to Regular Service Intervals: 2008 Touring Models. Check front fork for proper bearing adjustment and lubricate bearings at proper intervals.

With motorcycle front end raised off the floor, be sure front fork turns freely without any binding or interference and that there is no appreciable front to rear fork shake indicating excessive bearing looseness. Steering head bearings should be adjusted according to Service Manual procedure, if necessary.

Rear Fork Pivot Shaft

Refer to Regular Service Intervals: 2008 Touring Models. Check the tightness of the rear fork pivot shaft fastener at proper intervals.

NOTE:

For model specific information regarding the rear fork pivot shaft, refer to the appropriate Service Manual or see a Harley-Davidson dealer.

Brakes: Touring Models

⚠WARNING

Inspect brake pads for wear at service maintenance intervals. If you ride under adverse conditions (steep hills, heavy traffic, etc.), inspect more frequently. Excessively worn brake pads can lead to brake failure, which could

result in death or serious injury. (00052a)

NOTES:

- *Master cylinder cover specifies correct brake fluid.*
- *When adding or changing brake fluid, be sure to use only the type specified for your motorcycle.*
- *Use only Harley-Davidson D.O.T. 4 HYDRAULIC BRAKE FLUID (Part No. 99953-99A).*
- *Do not mix D.O.T. 4 with D.O.T. 5 brake fluid.*

1. Refer to Regular Service Intervals: 2008 Touring Models. Check brake pads and brake discs for wear at proper intervals.

2. Check the fluid level in the master cylinder reservoirs at proper intervals.

3. If level is low, clean dirt and debris from reservoir cover before removing.

   NOTE:

   If the brake system is not leaking, there should never be a need to add fluid. If the fluid level is low, the pads are probably worn and need to be replaced. By replacing the pads, the fluid level will rise.

CAUTION

D.O.T. 4 brake fluid will damage painted and body panel surfaces it comes in contact with. Always use caution and protect surfaces from spills whenever brake work is performed. Failure to comply can result in cosmetic damage. (00239b)

⚠CAUTION

Direct contact of D.O.T. 4 brake fluid with eyes can cause irritation. Avoid eye contact. In case of eye contact flush with large amounts of water and get medical attention. Swallowing large amounts of D.O.T. 4 brake fluid can cause digestive discomfort. If swallowed, obtain medical attention. Use in well ventilated area. KEEP OUT OF REACH OF CHILDREN. (00240a)

4. Add D.O.T. 4 HYDRAULIC BRAKE FLUID (Part No. 99953-99A) if necessary.

NOTE:

Use only D.O.T. 4 HYDRAULIC BRAKE FLUID (Part No. 99953-99A) approved for brake system use and available from your Harley-Davidson dealer.

Harley-Davidson has provided your new motorcycle with the optimum brake pad friction material available. It is selected to give the best performance possible under dry, wet and high operating temperature conditions. It exceeds all regulatory requirements currently in effect. However, during some braking conditions you may experience noise. This is normal for this friction material.

⚠WARNING

Brakes are a critical safety component. Contact a Harley-Davidson dealer for brake repair or replacement. Improperly serviced brakes can adversely affect brake performance, which could result in death or serious injury. (00054a)

See Brake Friction Material. Visual inspection of brake pads can be made without removing the caliper. View the lower area of each caliper with a flashlight.

⚠WARNING

Perform routine scheduled brake maintenance. Lack of maintenance at recommended intervals can adversely affect brake performance, which could result in death or serious injury. (00055a)

⚠WARNING

Always replace brake pads in complete sets for correct and safe brake operation. Improper brake operation could result in death or serious injury. (00111a)

The rear brake outer pad on all models can be measured from the caliper bracket side using a thin plastic 6.0 in. 152.4 mm rule. Place the rule against the brake disc through the space alongside the caliper.

The outer surface of the brake pad backing plate should measure 0.016 in. 0.4 mm or more away from the brake disc.

NOTES:

- *If the brake pad friction material is 0.016 in. 0.4 mm thick or less, the pads must be replaced immediately.*
- *Always replace brake pads in pairs.*

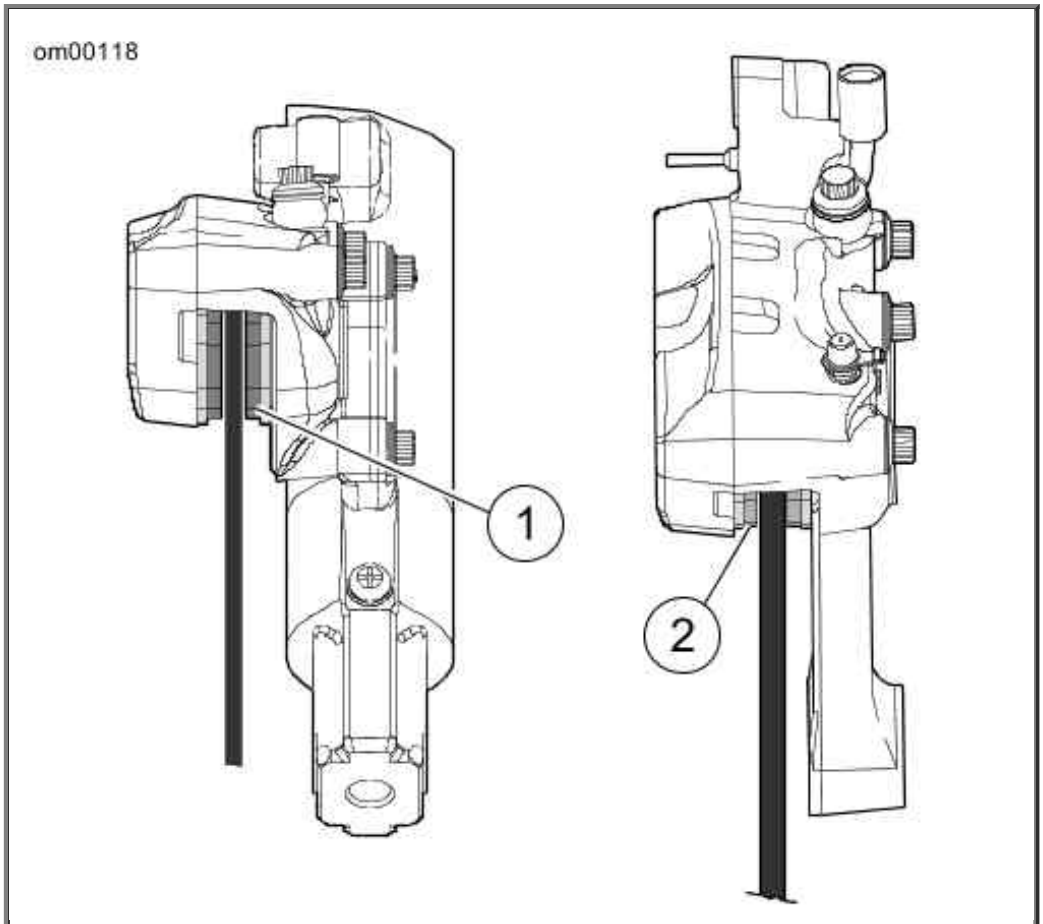

1. Front brake bottom view
2. Rear brake top view

Brake Friction Material

Tires

See Specifications: 2008 Touring Models for tire pressures and sizes.

- Be sure to keep tires properly inflated.
- Follow tire data for correct cold tire inflation pressures.
- Check before riding when tires are cold.
- Do not over-inflate tires.

⚠WARNING

Do not inflate tire beyond maximum pressure as specified on sidewall. Over inflated tires can blow out, which could result in death or serious injury. (00027a)

⚠WARNING

Match tires, tubes, air valves and caps to the correct wheel rim. Contact a Harley-Davidson dealer. Mismatching can result in damage to the tire bead, allow tire slippage on the rim or cause tire failure, which could result in death or serious injury. (00023a)

Check inflation pressure and inspect tread for punctures, cuts, breaks, etc., at least weekly if in

daily use. Check before each trip if used occasionally.

⚠WARNING

Be sure tires are properly inflated, balanced and have adequate tread. Inspect your tires regularly and see a Harley-Davidson dealer for replacements. Riding with excessively worn, unbalanced or under-inflated tires can adversely affect stability and handling, which could result in death or serious injury. (00014a)

Same as original equipment tires should be used. Other tires may not fit correctly, could adversely affect handling, and may be hazardous to use.

⚠WARNING

Tires are a critical safety component. Contact a Harley-Davidson dealer for tire repair or replacement. Improper tire service can adversely affect stability and handling, which could result in death or serious injury. (00057a)

⚠WARNING

Replace punctured or damaged tires. In some cases, small punctures in the tread area may be repaired from within the demounted tire by a Harley-Davidson dealer. Speed should NOT exceed 50 mph (80 km/h) for the first 24 hours after repair, and the repaired tire should NEVER be used over 80 mph (130 km/h). Failure to follow this warning could result in death or serious injury. (00015a)

⚠WARNING

Striking an object, such as a curb, can cause internal tire damage. If an object is struck, remove and inspect both the inside and outside of the tire. A damaged tire can adversely affect stability and handling, which could result in death or serious injury. (00058a)

Tire Replacement

Inspection

⚠WARNING

Harley-Davidson tires are equipped with wear bars that run horizontally across the tread. When wear bars become visible and only 1/32 in. (0.8 mm) tread depth remains, replace tire immediately. Using a worn tire can adversely

affect stability and handling, which could result in death or serious injury. Use only Harley-Davidson approved replacement tires. (00090b)

See Tire Sidewall. Arrows on tire sidewalls pinpoint location of wear bar indicators.

Tread wear indicator bars will appear on tire tread surfaces when 1/32 in. 0.8 mm or less of tire tread remains. See Tread Surface. Always replace tires before the tread wear indicator bars appear.

When To Replace Tires

New tires are needed if any of the following conditions exist:

1. Tread wear indicator bars become visible on the tread surfaces.
2. Tire cords or fabric become visible through cracked sidewalls, snags or deep cuts.
3. A bump, bulge or split in the tire.
4. Puncture, cut or other damage to the tire that cannot be repaired.

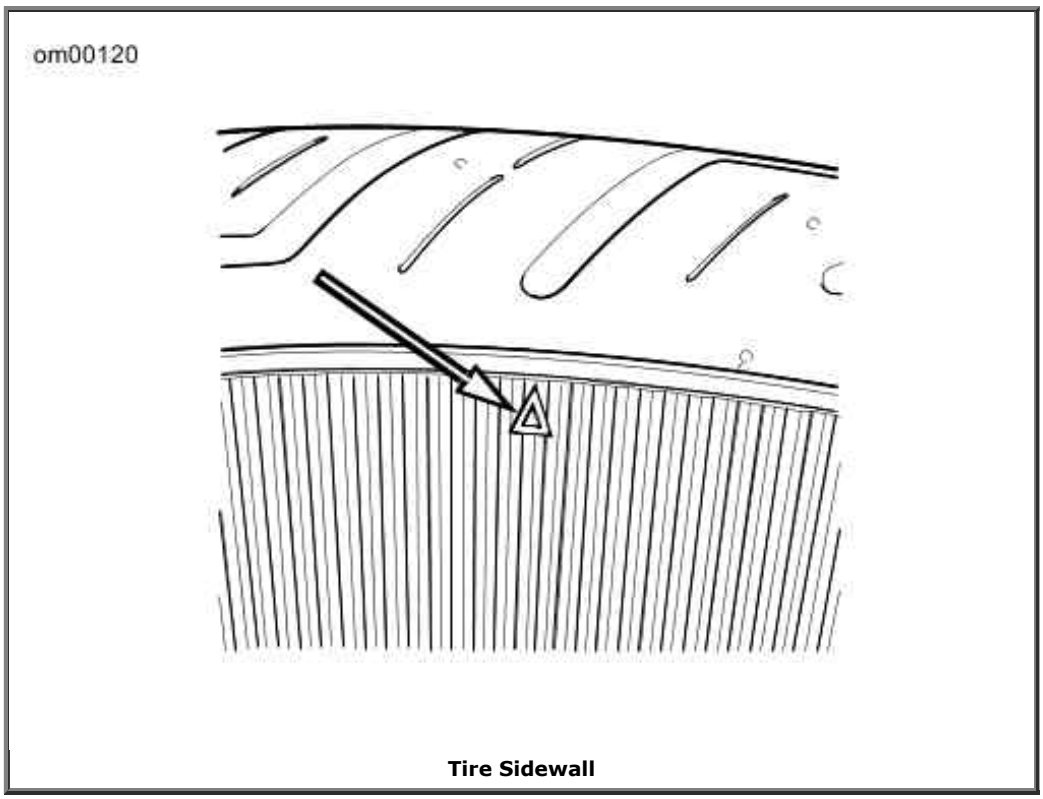

Tire Sidewall

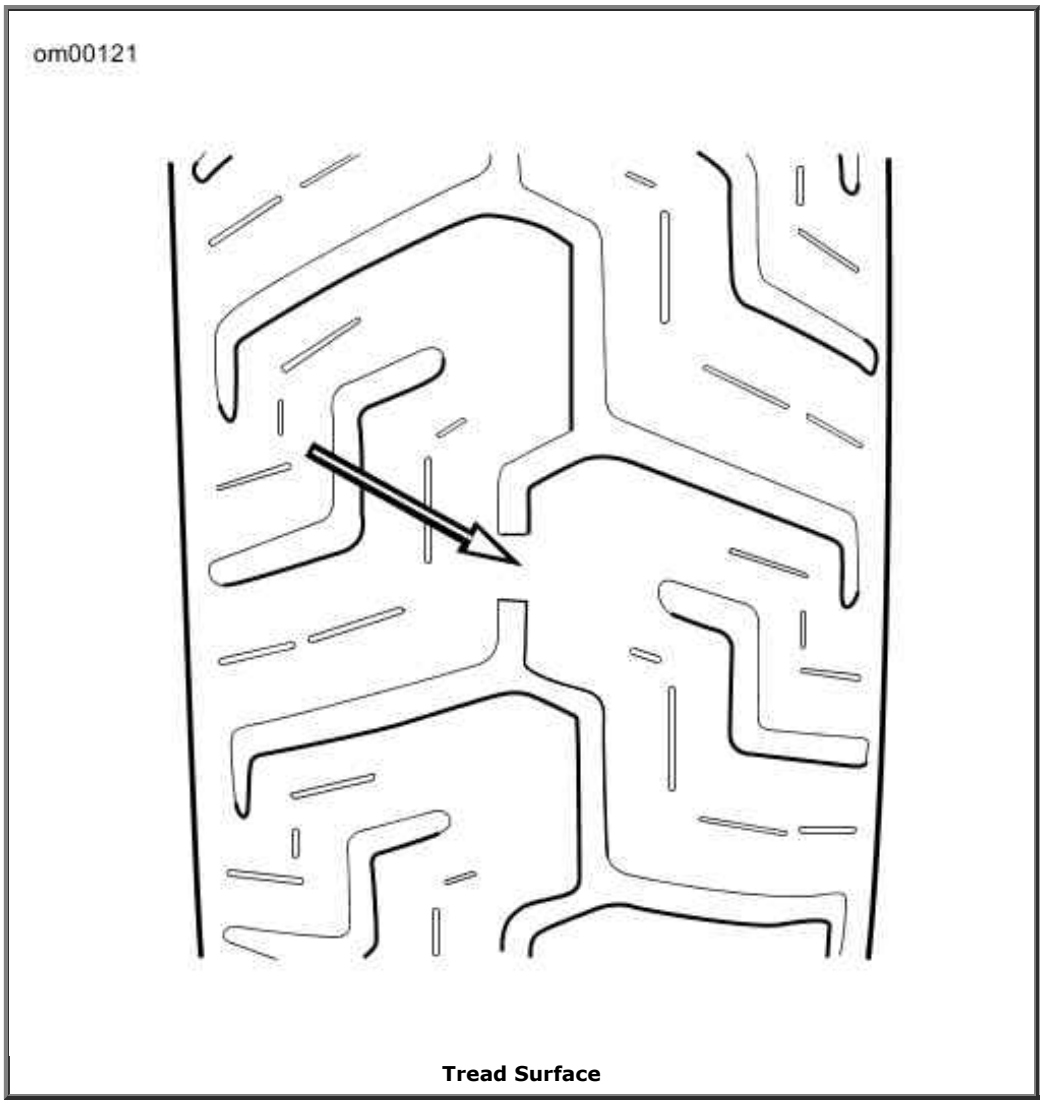

Tread Surface

Vehicle Alignment

Isolation Mounted Engine Models

Refer to Regular Service Intervals: 2008 Touring Models. Vehicle alignment should be checked at regular intervals. This includes whenever the rear wheel is removed and installed or when the rear drive belt is adjusted. The stabilizer links and engine mounts should be checked for wear according to Service Manual procedures at proper intervals.

Vehicle alignment is important. Vehicle stability is adversely affected if wheels are out of alignment. Major alignment of the front and rear wheel is partially controlled by one stabilizer link at the top of the engine. See a Harley-Davidson dealer for this service.

⚠WARNING

Do not change stabilizer link adjustment. Changing adjustment can adversely affect stability, which could result in death or serious injury. (00059a)

⚠WARNING

Only a Harley-Davidson dealer should perform vehicle

alignment. Improper alignment can adversely affect stability and handling, which could result in death or serious injury. (00060a)

Shock Absorbers

Refer to Regular Service Intervals: 2008 Touring Models. Inspect shock absorbers and rubber bushings for leaks and bushing deterioration at proper intervals.

Spark Plugs

Refer to Regular Service Intervals: 2008 Touring Models. Check the spark plugs at proper intervals.

⚠CAUTION

Do NOT pull on any electrical wires. Pulling on electrical wires may damage the internal conductor causing high resistance, which may result in minor or moderate injury. (00168a)

Disconnect spark plug cables from plugs by pulling on the molded connector caps. To reconnect, simply snap-on spark plug cables to tops of spark plugs.

Refer to Ignition System: 2008 Touring Models before servicing spark plugs.

1. Check spark plug type. Only use those spark plugs specified for your model motorcycle.
2. Check spark plug gap against table specifications.
3. Always tighten to the proper torque. Spark plugs must be tightened to the torque specified for proper heat transfer.

NOTE:

If a torque wrench is not available, tighten plugs finger tight and then tighten an additional one quarter turn with a spark plug wrench.

Ignition

The engine in your motorcycle has been designed specifically to achieve optimum fuel economy within exhaust emission controls. Factory programmed ignition characteristics provide maximum engine performance and driveability.

Air Cleaner

See Air Cleaner: Twin Cam Models. The engine air cleaner is a paper/wire mesh air filter element.

Refer to Regular Service Intervals: 2008 Touring Models. Remove air cleaner cover and inspect filter element at proper intervals. Under dusty conditions, inspect more often.

The paper/wire mesh air filter element should be washed in luke warm water with a mild detergent.

⚠WARNING

Compressed air can pierce the skin and flying debris from compressed air could cause serious eye injury. Wear safety glasses when working with compressed air. Never use your hand to check for air leaks or to determine air flow rates. (00061a)

- Allow filter to either air dry or blow it dry, from the inside, with low pressure air.
- Do not use an air cleaner filter oil on the Harley-Davidson paper/wire mesh air filter element.

CAUTION

Install air filter before running engine. Failure to do so can draw debris into the engine and could result in engine damage. (00207a)

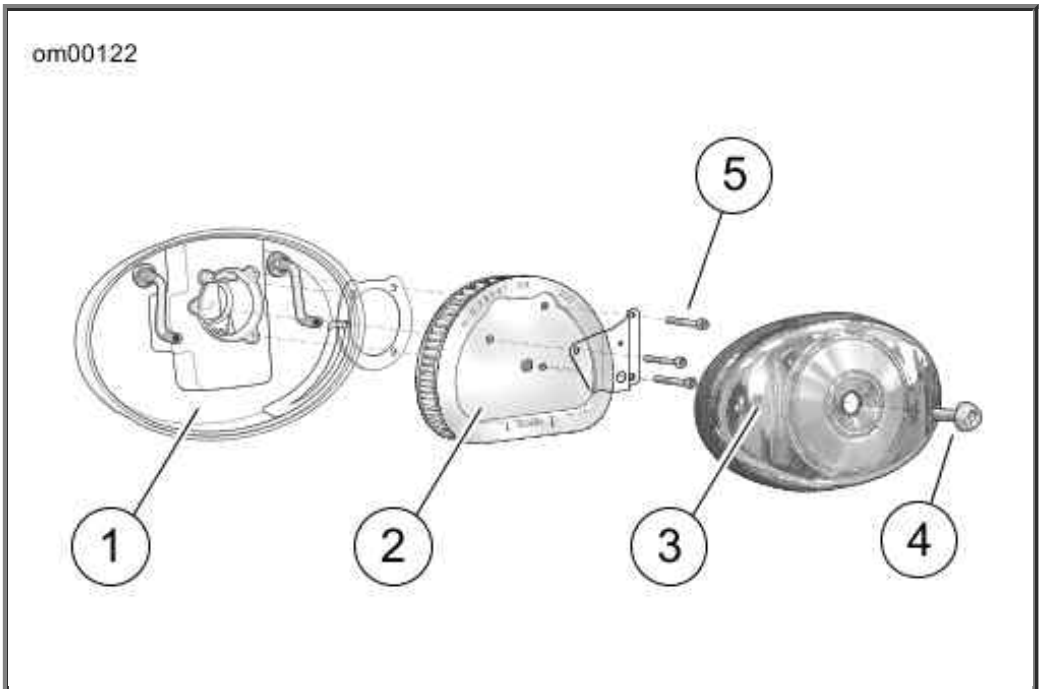

1. Backplate
2. Filter element
3. Cover
4. Cover screw
5. Screws

Air Cleaner: Twin Cam Models

Headlamp

See Headlamp Bulb: FLTR. The headlamp assembly uses replaceable quartz halogen bulb(s).

NOTE:

Refer to Bulb Chart: 2008 Touring Models and see a service manual for more details.

CAUTION

When replacement is required, use only the specified sealed beam unit or bulb, available from a Harley-Davidson dealer. An improper wattage sealed beam or bulb, can cause charging system problems. (00209a)

CAUTION

Never touch the quartz bulb. Fingerprints will etch the glass and decrease bulb life. Grab the bulb with paper or a clean, dry cloth. Failure to do so could result in bulb damage. (00210a)

⚠WARNING

Handle bulb carefully and wear eye protection. Bulb contains gas under pressure, which, if not handled carefully, could cause serious eye injury. (00062b)

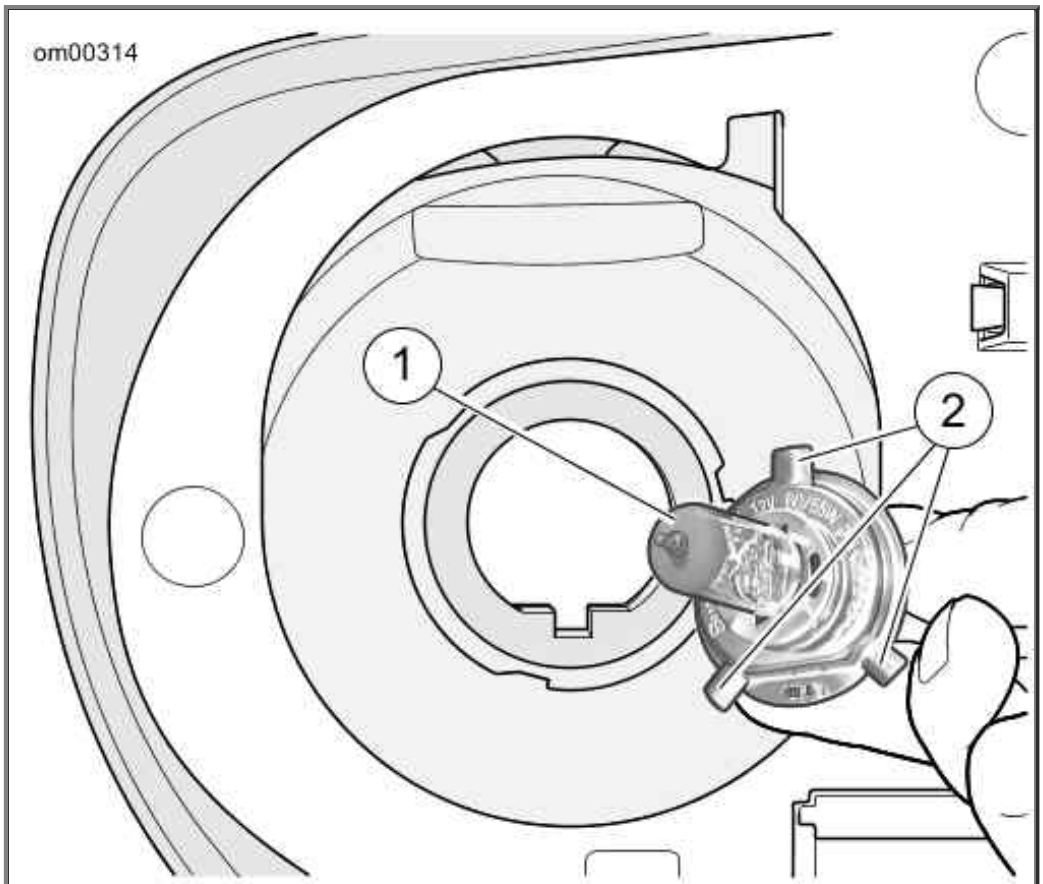

1. Bulb
2. Tabs

Headlamp Bulb: FLTR

Headlamp Alignment: Touring Models

Check Alignment

⚠WARNING

The automatic-on headlamp feature provides increased visibility of the rider to other motorists. Be sure headlamp is on at all times. Poor visibility of rider to other motorists can result in death or serious injury. (00030b)

1. Verify correct front and rear tire inflation pressure. Refer to Tire Pressures: 2008 Touring Models.
2. Place the motorcycle on a level floor or pavement in an area with minimum light.
3. See Check Headlamp Alignment: Touring Models. Point the front of the motorcycle toward a screen or wall which is 25 feet (7.6 meters) from where patch of front tire contacts floor (i.e. - directly below front axle).
4. Draw a horizontal line on screen or wall (dimension "A") that is exactly the same height above the floor as the headlamp center.
5. Have a person whose weight is roughly the same as that of the principal rider sit on the motorcycle seat. The weight of the rider will compress the vehicle suspension slightly.

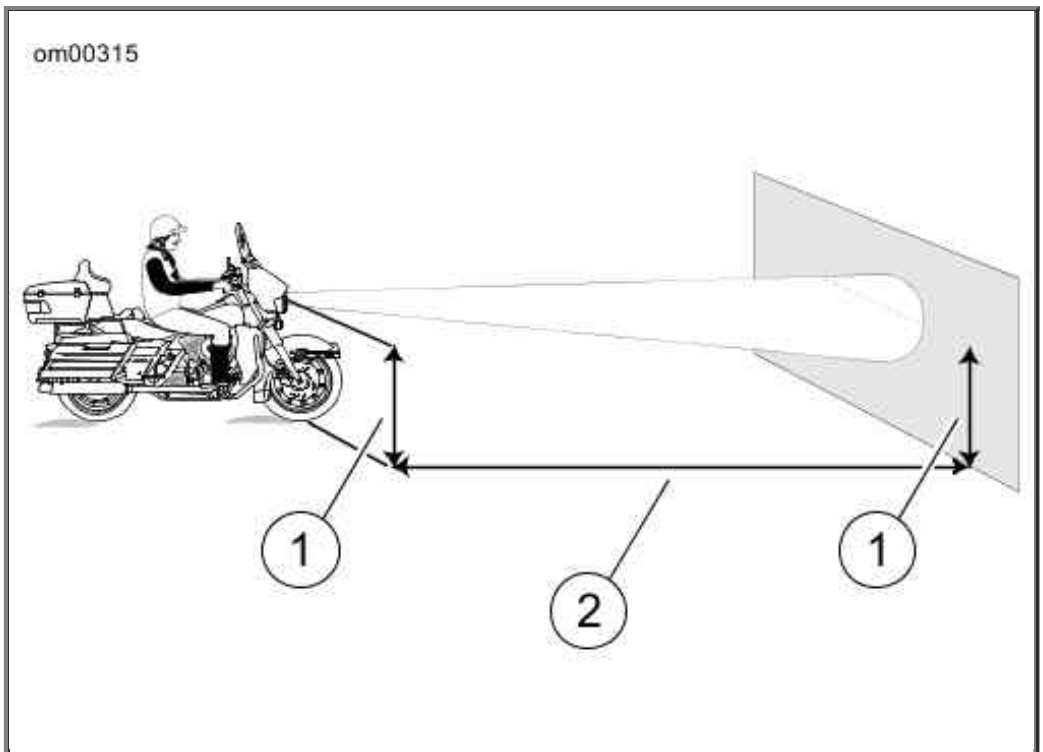

1. Distance to center of headlamp
2. 25 feet (7.6 meters)

Check Headlamp Alignment: Touring Models

6. Stand the motorcycle upright with both tires resting on the floor and with the front wheel held in straight alignment (directly forward).
7. Turn the ignition/headlamp key switch to IGNITION. Rock the headlamp dimmer switch on the left handlebar to HI.
8. Verify and correct headlamp adjustment if necessary.

a. Check the light beam for proper height alignment. The center of the main beam of light should be even with the horizontal line on the screen or wall.

b. Check the light beam for proper lateral alignment. The main beam of light should be directed straight ahead (i.e., equal area of light to right and left of center).

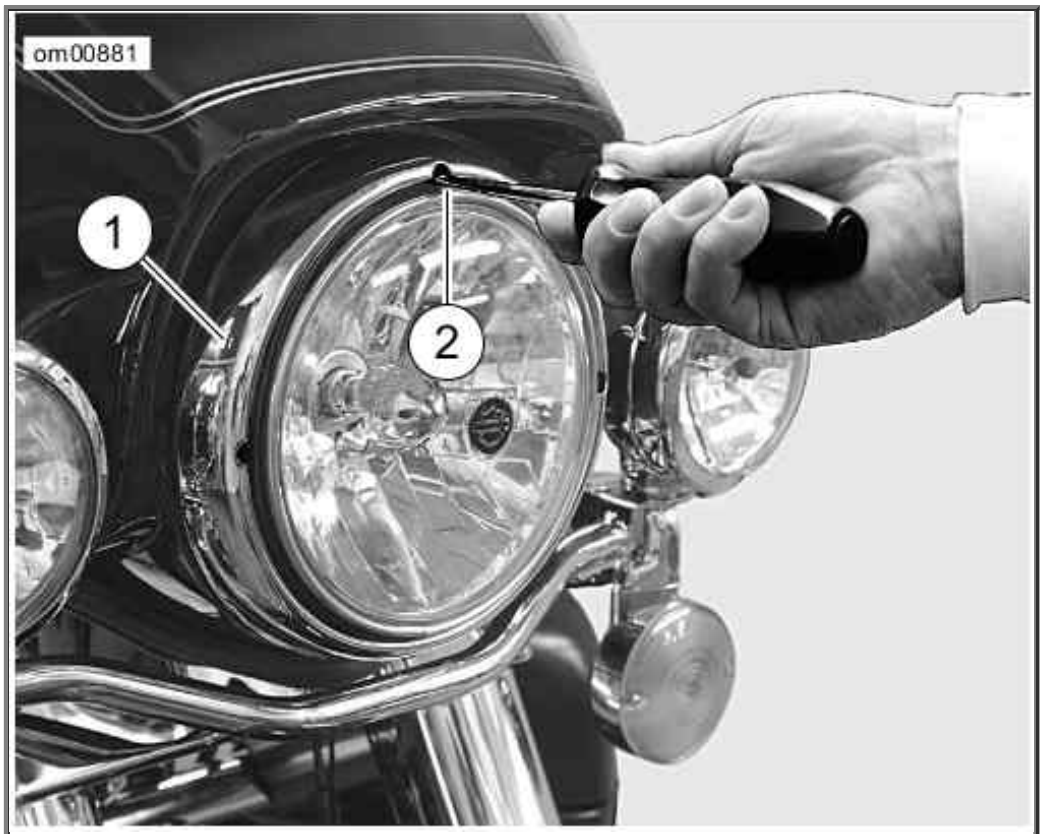

1. Headlamp door
2. Slot

Headlamp Door: 2008 Touring Models

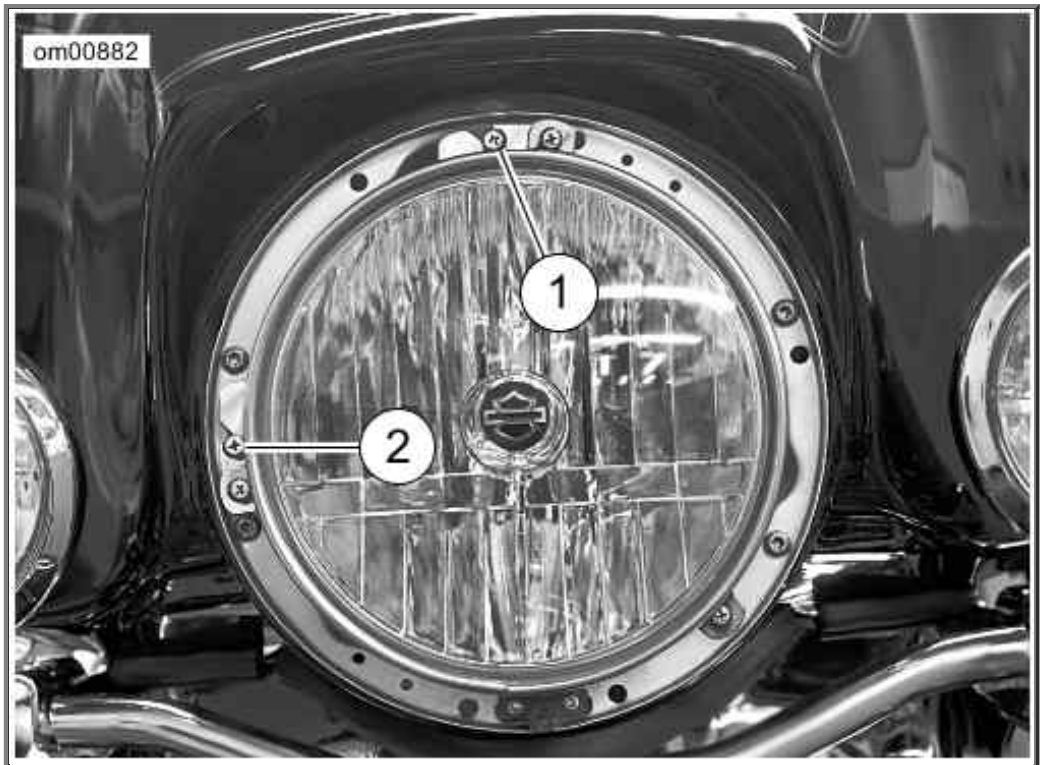

1. Vertical adjusting screw
2. Horizontal adjusting screw

Headlamp Adjustment: FLHT, FLHX, FLHTC, FLHTCU, FLHR and FLHRC

Adjust FLHT/FLHR Headlamps

NOTE:

Headlamp adjustment can be performed without removing the headlamp door (chrome ring).

1. See Headlamp Door: 2008 Touring Models. Insert Phillips screwdriver between headlamp housing and rubber gasket.
2. See Headlamp Adjustment: FLHT, FLHX, FLHTC, FLHTCU, FLHR and FLHRC. Adjust beam.
   a. **Horizontal:** Turn the vertical adjusting screw (1) to adjust headlamp vertically.
   b. **Vertical:** Turn the horizontal adjusting screw (2) to adjust headlamp horizontally.

Adjust FLTR Headlamps

1. See Headlamp Adjustment: FLTR. Fit a 4.5 mm deep socket and a flexible driver to the hex adjusters near the bottom edge of the left and right inner fairing. The adjusters pivot the double headlamp housing around its upper mount.
2. Adjust the headlamp beam.
   a. **Horizontal:** Turn the left or right adjuster to horizontally center the headlamp beam.
   b. **Vertical:** Turn both adjusters equally to adjust the headlamp vertically. Refer to FLTR Hex Adjuster Rotation for directions to move headlamp beam.

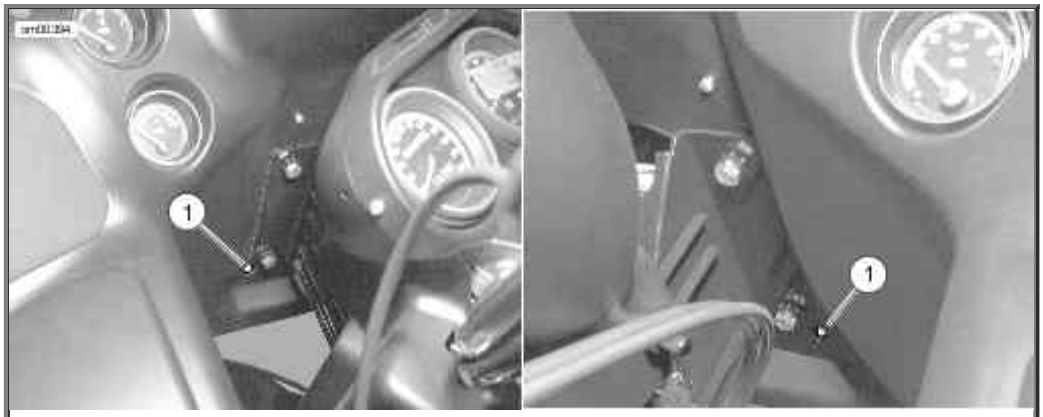

1. Hex adjuster

Headlamp Adjustment: FLTR

FLTR Hex Adjuster Rotation

HEX ADJUSTER	ROTATION	BEAM MOVEMENT
Left only	clockwise	to the right
Right only	counterclockwise	
Left only	counterclockwise	to the left
Right only	clockwise	
Left and right equally	clockwise	upward
Left and right equally	counterclockwise	downward

Turn Signal Bulb Replacement: Bullet Style

1. See Lens Cap Notch. Insert a coin or the blade of a small screwdriver into the notch at the bottom of the lens cap. Carefully twist until the lens cap pops out of the lamp housing.
2. Push in bulb and rotate counterclockwise. Pull bulb from socket.
3. Inspect condition of electrical contacts in socket. If necessary, clean with a small wire brush and electrical contact cleaner.
4. Coat base of **new** bulb with ELECTRICAL CONTACT GREASE 99861-90 .
5. Orient index pins on **new** bulb with pin guides inside bulb socket. Push bulb in and turn clockwise to lock in place.
6. Snap lens cap back into the lamp holder. Rotate lens to position notch at bottom of lamp.

⚠WARNING

Be sure that all lights and switches operate properly before operating motorcycle. Low visibility of rider can result in death or serious injury. (00316a)

7. Turn ignition on and test for proper turn signal operation.

NOTE:

If the turn signal or running lamp will not light after replacing a bulb, check the wiring, the ground at the socket and/or the switch.

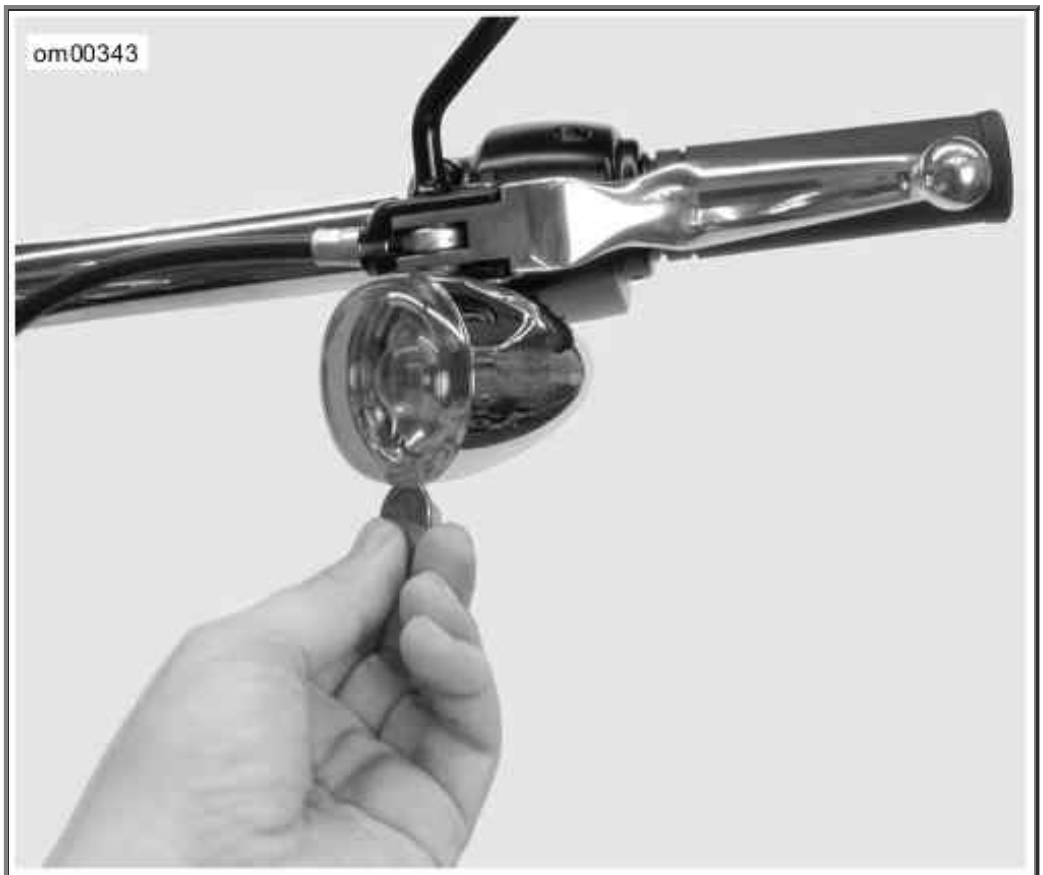

Lens Cap Notch

Turn Signal Bulb Replacement: Flat Lens Style

1. See Turn Signal Lamp Assembly: Flat Lens Style. Remove two screws to release lens from lamp housing.
2. Push in bulb and rotate counterclockwise to remove bulb from socket.
3. Inspect condition of electrical contacts in socket. If necessary, clean with a small wire brush and electrical contact cleaner.
4. Liberally apply dielectric grease to contacts in socket and at bottom of **new** bulb.
5. Orient index pins on **new** bulb with pin guides inside bulb socket.
6. Push bulb in and turn clockwise to lock in place.
7. Seat lens in lamp and install two screws.

⚠WARNING

Be sure that all lights and switches operate properly before operating motorcycle. Low visibility of rider can result in death or serious injury. (00316a)

8. Turn ignition on and test for proper turn signal operation.

NOTE:

If the turn signal or running lamp will not light after replacing a bulb, check the wiring, the ground at the socket and/or the switch.

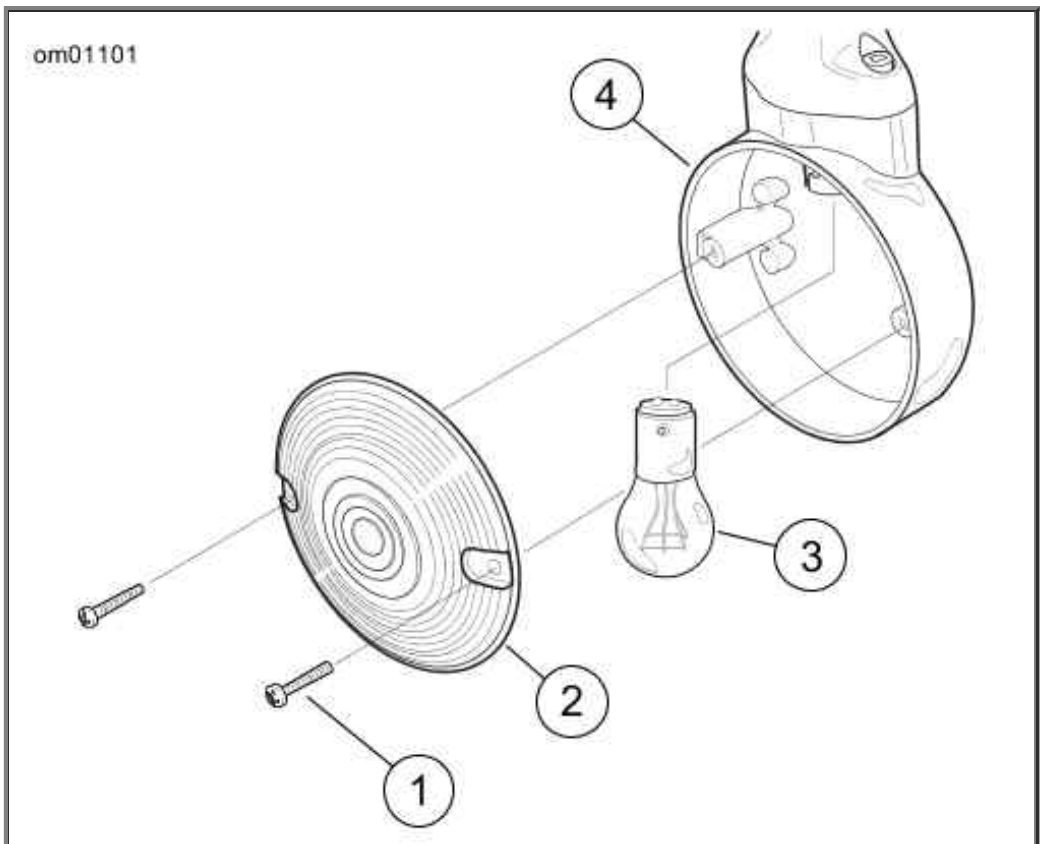

1. Screws (2)
2. Lens
3. Bulb
4. Lamp housing

Turn Signal Lamp Assembly: Flat Lens Style

Tail Lamp Bulb Replacement: Standard Style

1. See Tail Lamp Assembly: Standard Style. Make certain ignition switch is turned off.
2. Remove two screws and lens from base.

   NOTE:

   For ease of bulb removal, the 4-Pin multilock connector can be removed from circuit board.

3. Remove (pull) bulb assembly from lens. Remove bulb from socket.
4. Coat base of **new** bulb with ELECTRICAL CONTACT GREASE (Part No. 99861-90). Install **new** bulb in socket.
5. Install (push) bulb assembly to lens.
6. If removed connect 4-Pin multilock connector to circuit board.

7. Install lens to base with two screws. Tighten screws to 20-24 in-lbs (2.3-2.7 Nm).

⚠WARNING

Be sure that all lights and switches operate properly before operating motorcycle. Low visibility of rider can result in death or serious injury. (00316a)

8. Turn ignition on and test for proper tail lamp operation.

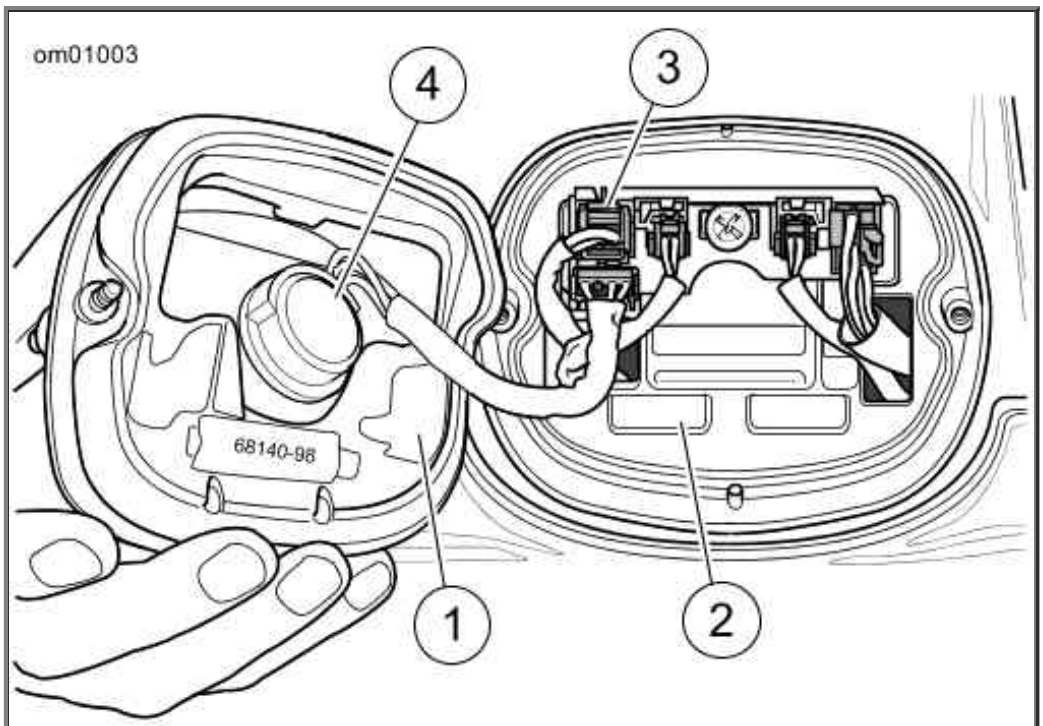

1. Lens
2. Base
3. 4-pin multilock connector
4. Bulb assembly

Tail Lamp Assembly: Standard Style

Alternator/Voltage Regulator

Charging Rate

The alternator output is controlled and changed to direct current by the voltage regulator.

- The voltage regulator increases charging rate when battery is low or lamps are lit.
- The voltage regulator decreases charging rate when battery charge is up.

CAUTION

It is possible to overload your motorcycle's charging system by adding too many electrical accessories. If your combined electrical accessories operating at any one time consume more electrical current than your vehicle's charging system can produce, the electrical consumption

can discharge the battery and cause vehicle electrical system damage. See a Harley-Davidson dealer for advice about the amount of current consumed by additional electrical accessories, or for necessary wiring changes. (00211b)

A battery voltage LED in the instruments will light up when voltage is either too low or too high.

NOTES:

- *This unit requires no interval attention. If any electrical system trouble is experienced that might be traceable to the alternator or voltage regulator, the motorcycle should be taken to a Harley-Davidson dealer who has the necessary electrical testing equipment to give the required attention.*
- *For model specific information regarding the voltage regulator, refer to the appropriate Service Manual or see a Harley-Davidson dealer.*

Battery: General

Type

Your motorcycle uses a permanently sealed, maintenance-free, lead/calcium and sulfuric acid battery. All batteries are shipped precharged and ready to be put into service. Do not attempt to open the battery for any reason.

Antidotes for Battery Acid

CONTACT	TREATMENT
External	Flush with water.
Internal	Drink large quantities of milk or water, followed by milk of magnesia, vegetable oil or beaten eggs. Get immediate medical attention.
Eyes	Flush with water. Get immediate medical attention.

⚠WARNING

Batteries contain sulfuric acid, which could cause severe burns to eyes and skin. Wear a protective face shield, rubberized gloves and protective clothing when working with batteries. KEEP BATTERIES AWAY FROM CHILDREN. (00063a)

⚠WARNING

Explosive hydrogen gas, which escapes during charging, could cause death or serious injury. Charge battery in a well-ventilated area. Keep open flames, electrical sparks

and smoking materials away from battery at all times. KEEP BATTERIES AWAY FROM CHILDREN. (00065a)

⚠WARNING

Batteries, battery posts, terminals and related accessories contain lead and lead compounds, and other chemicals known to the State of California to cause cancer, and birth defects or other reproductive harm. Wash hands after handling. (00019e)

⚠WARNING

Never remove warning label attached to top of battery. Failure to read and understand all precautions contained in warning, could result in death or serious injury. (00064a)

1. Contents are corrosive
2. Wear safety glasses
3. Contents are explosive
4. Keep flames away
5. Read instructions
6. Keep away from children

Battery Warning Label

Battery Warning Label

Voltmeter Test

Refer to Voltmeter Test. The voltmeter test provides a general indicator of battery condition. Check the voltage of the battery to verify that it is in a 100 percent fully charged condition. If the open circuit (disconnected) voltage reading is below 12.6V, charge the battery and then re-check the voltage after the battery has set for one to two hours.

Voltmeter Test

READING IN VOLTS	PERCENT OF CHARGE
12.7	100
12.6	75
12.3	50
12.0	25
11.8	0

Cleaning and Inspection

Battery top must be clean and dry. Dirt and electrolyte on top of the battery can cause battery to self-discharge.

1. Clean battery top.

2. Clean cable connectors and battery terminals using a wire brush or fine grit sandpaper to remove any oxidation.

3. Inspect and clean the battery screws, clamps and cables. Check for breakage, loose connections and corrosion.

4. Check the battery posts for melting or damage caused by overtightening.

5. Inspect the battery for discoloration, a raised top or a warped or distorted case. This might indicate that the battery has been frozen, overheated or overcharged.

6. Inspect the battery case for cracks or leaks.

Charging

Never charge a battery without first reviewing the instructions for the charger being used. In addition to the manufacturer's instructions, follow these general safety precautions.

Charge the battery if any of the following conditions exist:

- Vehicle lamps appear dim.
- Electric starter sounds weak.
- Battery has not been used for an extended period of time.

⚠WARNING

Explosive hydrogen gas, which escapes during charging, could cause death or serious injury. Charge battery in a well-ventilated area. Keep open flames, electrical sparks and smoking materials away from battery at all times. KEEP BATTERIES AWAY FROM CHILDREN. (00065a)

⚠WARNING

Batteries contain sulfuric acid, which could cause severe burns to eyes and skin. Wear a protective face shield, rubberized gloves and protective clothing when working with batteries. KEEP BATTERIES AWAY FROM CHILDREN. (00063a)

1. Perform a voltmeter test to determine the state of charge. If battery needs to be charged, proceed to the next step.

2. Place the battery on a level surface.

⚠WARNING

Unplug or turn OFF battery charger before connecting charger cables to battery. Connecting cables with charger ON can cause a spark and battery explosion, which could result in death or serious injury. (00066a)

⚠WARNING

Connect positive (+) battery cable first. If positive (+) cable should contact ground with negative (-) cable connected, the resulting sparks can cause a battery explosion, which could result in death or serious injury. (00068a)

⚠WARNING

Disconnect negative (-) battery cable first. If positive (+) cable should contact ground with negative (-) cable connected, the resulting sparks can cause a battery explosion, which could result in death or serious injury. (00049a)

CAUTION

Do not reverse the charger connections described in the following steps or the charging system of the motorcycle could be damaged. (00214a)

NOTES:

- *The figures listed in the Amp-hour table assume that the battery is charging at room temperature. If warmer than room temperature, use a slightly shorter charging time. If colder, use a slightly longer charging time.*
- *The use of constant current chargers to charge sealed maintenance free batteries is not recommended. Any overcharge will cause dry-out and premature battery failure. If a constant current charger is the only type available, do not exceed the charge times listed in 28 Amp-Hour Battery Charging Rate/Times and do not continue charging the battery if it gets hot. When charging, never exceed 15 volts.*

3. Connect the red battery charger lead to positive (+) terminal of the battery.

4. Connect the black battery charger lead to negative (-) terminal of the battery.

   NOTE:

   If the battery is still in the vehicle, connect the negative lead to the chassis ground. Make sure that the ignition and all electrical accessories are turned off.

5. Step away from the battery and turn on the charger.

⚠WARNING

Unplug or turn OFF battery charger before disconnecting charger cables from battery. Disconnecting clamps with charger ON can cause a spark and battery explosion, which could result in death or serious injury. (00067a)

6. After the battery is fully charged, turn OFF the charger and disconnect the black battery charger lead to the negative (-) terminal of the battery.

7. Disconnect the red battery charger lead to the positive (+) terminal of the battery.

8. Mark the charging date on the battery.

28 Amp-Hour Battery Charging Rate/Times

READING (VOLTS)	PERCENT OF CHARGE	3 AMP CHARGER	6 AMP CHARGER	10 AMP CHARGER	20 AMP CHARGER
12.7	100	-	-	-	-
12.6	75	2.5 hours	1.25 hours	45 minutes	25 minutes
12.3	50	5 hours	2.5 hours	1.5 hours	50 minutes
12.0	25	7.5 hours	3.75 hours	2.25 hours	70 minutes
11.8	0	10 hours	5 hours	3 hours	1.5 hours

Storage

CAUTION

Turn engine over a few times to be sure there is no oil in the crankcase and that all oil has been pumped back into the oil tank. Stop engine and re-check oil level. Failure to do so can result in engine damage. (00071a)

CAUTION

Do not allow battery to completely discharge. The electrolyte in a discharged battery will freeze. The more discharged a battery is, the more easily it can freeze and crack the battery case. (00218a)

If the motorcycle will not be operated for several months, such as during the winter season, remove the battery from the motorcycle and fully charge.

If the motorcycle is to be stored with the battery installed, it will be necessary to connect a battery tender to maintain charge. See an authorized dealer for more information.

Self-discharge is a normal condition and occurs continuously. The rate of self-discharge depends on the ambient temperature and the battery's state of charge.

- Batteries discharge at a faster rate at higher ambient temperatures.
- To reduce the self-discharge rate, store battery in a cool (not freezing), dry place.
- Charge the battery every month if stored at temperatures below 60° F 16° C .
- Charge the battery more frequently if stored in a warm area above 60° F 16° C .

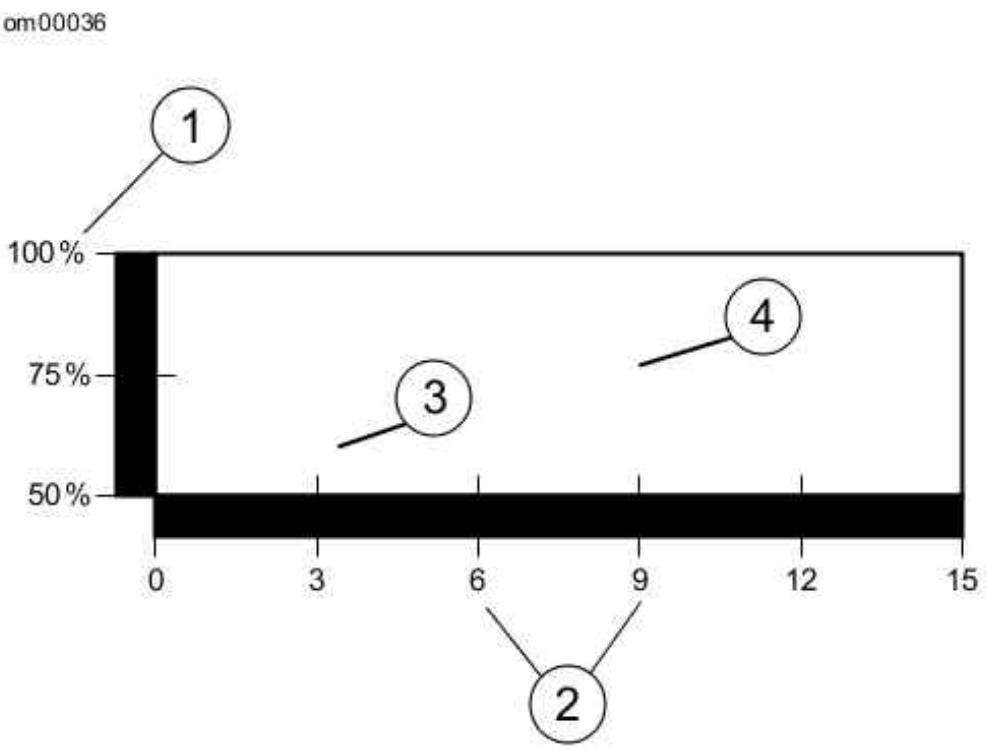

1. Capacity
2. Months of stand
3. Measured at 105° F (40° C)
4. Measured at 77° F (25° C)

Effective Rate of Temperature on Battery Self-discharging Rate

Battery: Touring Models

Disconnection and Removal

1. Remove seat.

   NOTE:

   The ECM caddy has an opening in the front right corner allowing access to the negative battery terminal.

2. See ECM Caddy: Touring Models. Press latches (2) away from the ECM (1) and detach from ECM caddy (3).

3. Remove fastener (4) from rear of ECM caddy.

4. Remove ECM caddy from battery compartment.

⚠WARNING

Disconnect negative (-) battery cable first. If positive (+) cable should contact ground with negative (-) cable connected, the resulting sparks can cause a battery explosion, which could result in death or serious injury.

(00049a)

5. See Battery Compartment: Touring Models. Unthread bolt and remove battery negative cable (black) from battery negative (-) terminal.
6. Unthread bolt and remove battery positive cable (red) from battery positive (+) terminal.
7. Pull up on strap to lift battery out from compartment.

Installation and Connection

CAUTION

Connect the cables to the correct battery terminals. Failure to do so could result in damage to the motorcycle electrical system. (00215a)

⚠WARNING

Connect positive (+) battery cable first. If positive (+) cable should contact ground with negative (-) cable connected, the resulting sparks can cause a battery explosion, which could result in death or serious injury. (00068a)

⚠WARNING

Do not allow positive (+) battery cable to contact ground with negative (-) cable connected. Resulting sparks can cause a battery explosion, which could result in death or serious injury. (00069a)

NOTE:

Make sure strap is inside compartment under battery. The strap handle should remain outside the compartment.

1. See Battery Compartment: Touring Models. Place the fully charged battery into compartment with terminals toward the front of the vehicle. Lay strap handle over top of battery.

CAUTION

Do not over-tighten bolts on battery terminals. Use recommended torque values. Over-tightening battery terminal bolts could result in damage to battery terminals. (00216a)

2. Insert bolt through battery positive cable (+) (red) into threaded hole of battery positive (+) terminal.
3. Tighten bolt to 60-96 in-lbs (6.8-10.8 Nm).

4. Insert bolt through battery negative cable (black) into threaded hole of battery negative (-) terminal.

5. Tighten bolt to 60-96 in-lbs (6.8-10.8 Nm).

CAUTION

Keep battery clean and lightly coat terminals with petroleum jelly to prevent corrosion. Failure to do so could result in damage to battery terminals. (00217a)

6. Apply a light coat of petroleum jelly or corrosion retardant material to both battery terminals.

7. See ECM Caddy: Touring Models. Install ECM caddy over battery compartment. Tighten fastener to 15-20 ft-lbs (20-27 Nm).

8. Align ECM with latches on caddy. Snap ECM into place and slide to left side of vehicle until ECM rests against bracket on left side of caddy and rests on guide pins. The negative battery terminal should be visible through the caddy.

⚠WARNING

After installing seat, pull upward on seat to be sure it is locked in position. While riding, a loose seat can shift causing loss of control, which could result in death or serious injury. (00070b)

9. Install seat.

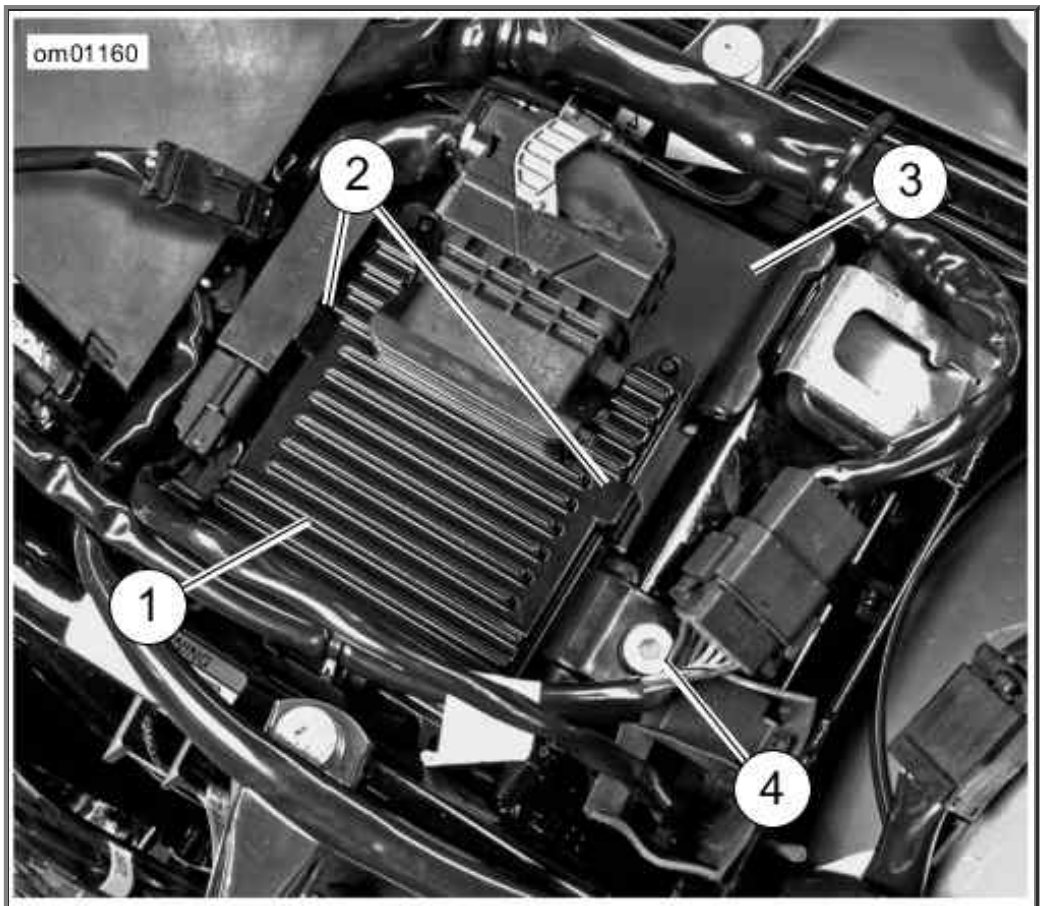

1. Electronic control module (ECM)
2. Latches
3. ECM caddy
4. ECM caddy fastener

ECM Caddy: Touring Models

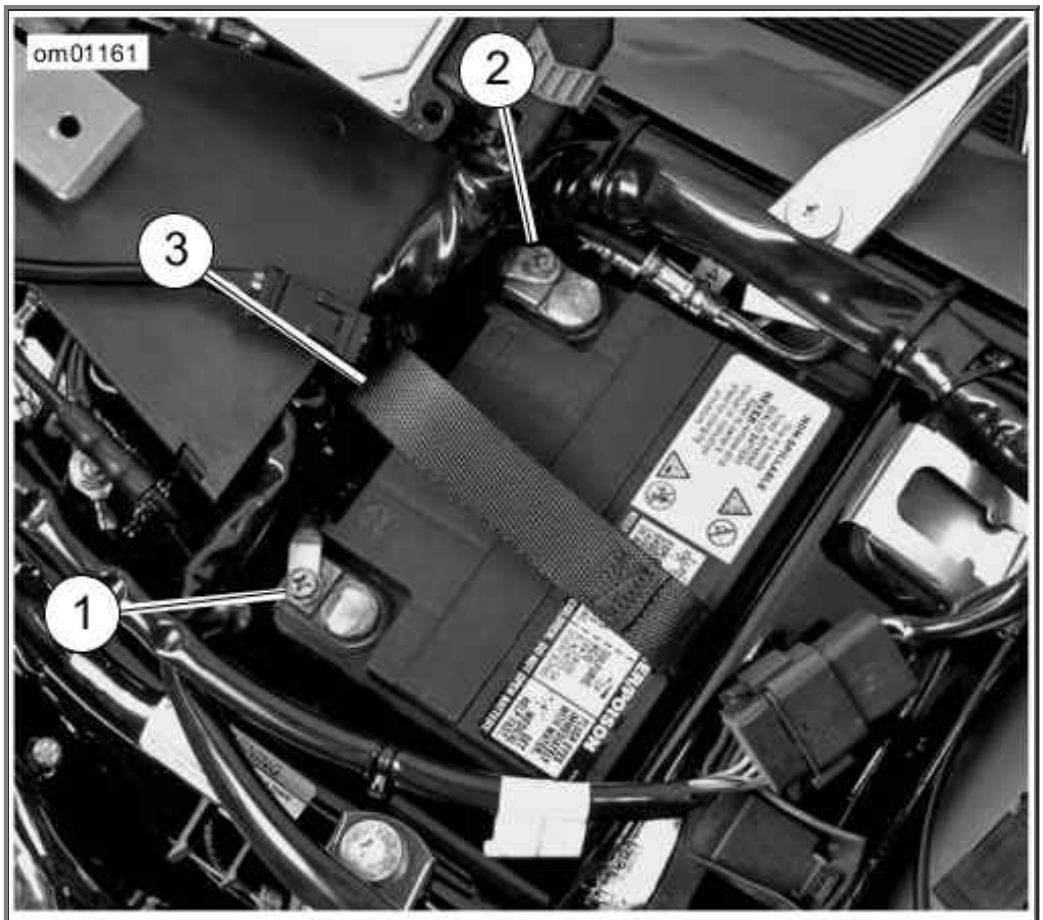

1. Positive terminal
2. Negative terminal
3. Battery strap

Battery Compartment: Touring Models

Jump Starting

Harley-Davidson does not recommend jump-starting a motorcycle. However, there may be circumstances when it is necessary to do so. Therefore, we suggest jump-starting be performed as follows:

⚠WARNING

Be sure jumper cables touch only appropriate battery terminals or ground. Allowing jumper cables to touch each other can result in sparks and a battery explosion, which could result in death or serious injury. (00072a)

⚠WARNING

Explosive hydrogen gas, which escapes during charging, could cause death or serious injury. Charge battery in a well-ventilated area. Keep open flames, electrical sparks and smoking materials away from battery at all times. KEEP BATTERIES AWAY FROM CHILDREN. (00065a)

CAUTION

Harley-Davidson motorcycles have a 12 Volt battery. Be sure the booster vehicle has a 12 Volt system. Failure to do so could result in vehicle damage. (00220a)

NOTE:

This procedure presumes the BOOSTER battery is in another vehicle.

1. Turn off all unnecessary lamps and accessories.

Positive Cable

---

2. See Jump Start Cable Connections. Connect one end of a jumper cable to the DISCHARGED battery positive (+) terminal (1).
3. Connect the other end of the same cable to the BOOSTER battery positive (+) terminal (2).

Negative Cable

⚠WARNING

Do not connect negative (-) cable to or near the discharged battery negative (-) terminal. Doing so could cause a spark and explosion, which could result in death or serious injury. (00073a)

4. Connect one end of a jumper cable to the BOOSTER battery negative (-) terminal (3).

CAUTION

Do not connect the negative (-) cable to painted or chrome parts. Doing so could result in discoloration at the attachment point. (00221a)

5. Connect other end of the same cable (4) to a safe ground, (away from the DISCHARGED battery).
6. Start motorcycle.
7. Disconnect cables in reverse order of steps 2, 3, 4, 5. That is: steps 5, 4, 3, 2.

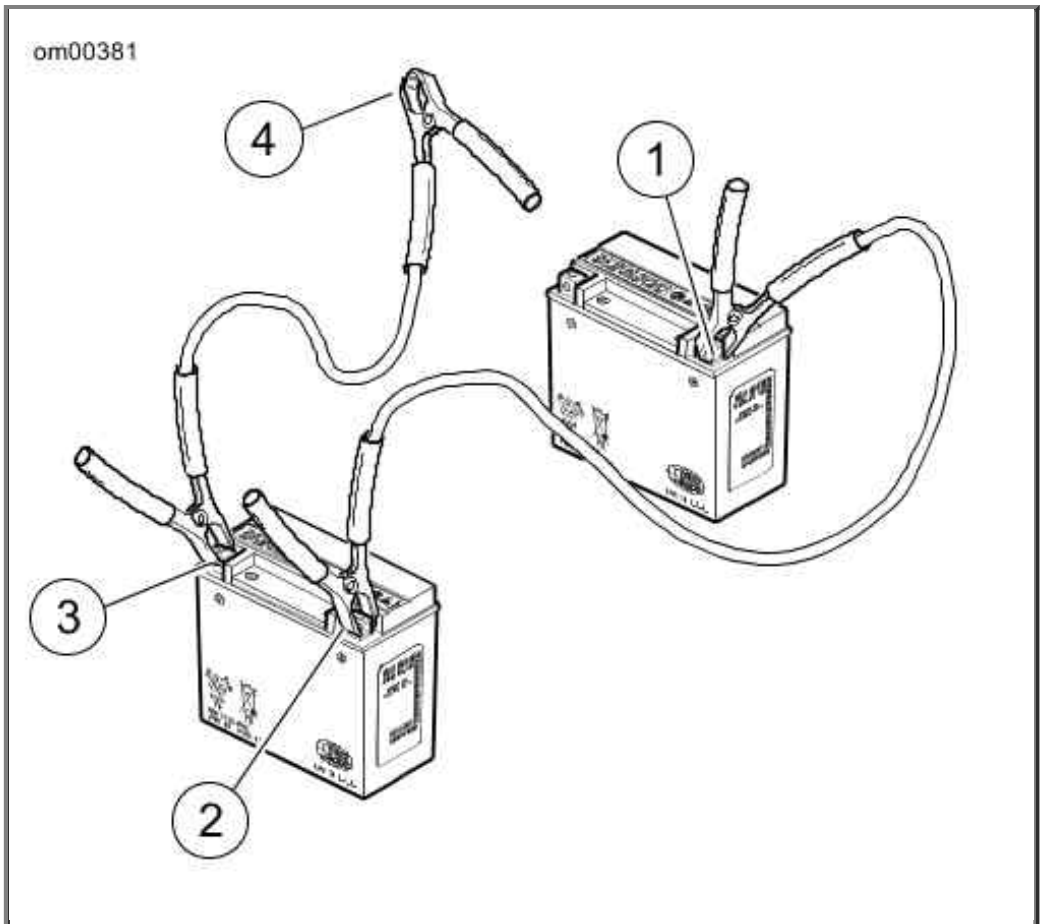

1. Discharged battery positive (+) terminal
2. Booster battery positive (+) terminal
3. Booster battery negative (-) terminal
4. Ground

Jump Start Cable Connections

Electrical Protection: Touring Models

System Fuse Removal

CAUTION

Do not skip any steps for fuse replacement. Skipping fuse replacement steps can result in damage to the sound system and/or other motorcycle systems. (00223a)

Fuses are located under left side cover.

For electrical problems, it is best to see a Harley-Davidson dealer who has necessary parts and equipment to perform electrical services.

NOTE:

See Left Side Cover Removed: Touring Models. Removal of side covers during electrical service requires no tools. Gently pull side cover to remove. Align barbed studs on side cover with grommets in frame and push to install.

1. Place the ignition/headlamp key switch in the OFF position.

2. Remove left saddlebag and side cover.

3. See Left Side Cover Removed: Touring Models. Press latch on bottom of fuse block cover and swing bottom of the cover out. Remove the cover.

   NOTE:

   The fuse block cover has a fuse puller attachment that may be used to remove fuses.

4. See Fuses: Touring Models and refer to Fuses: Touring Models. Remove fuse and inspect the element.

CAUTION

Always use replacement fuses that are of the correct type and amperage rating. Use of incorrect fuses can result in damage to electrical systems. (00222a)

5. Replace the fuse if the element is burned or broken.

   NOTE:

   Automotive type ATO fuses are used for replacements. Two spare fuses can be found in the fuse block.

6. Insert the top of the fuse block cover in upper retainer and press bottom of cover to snap into place.

7. Install left side cover and saddlebag.

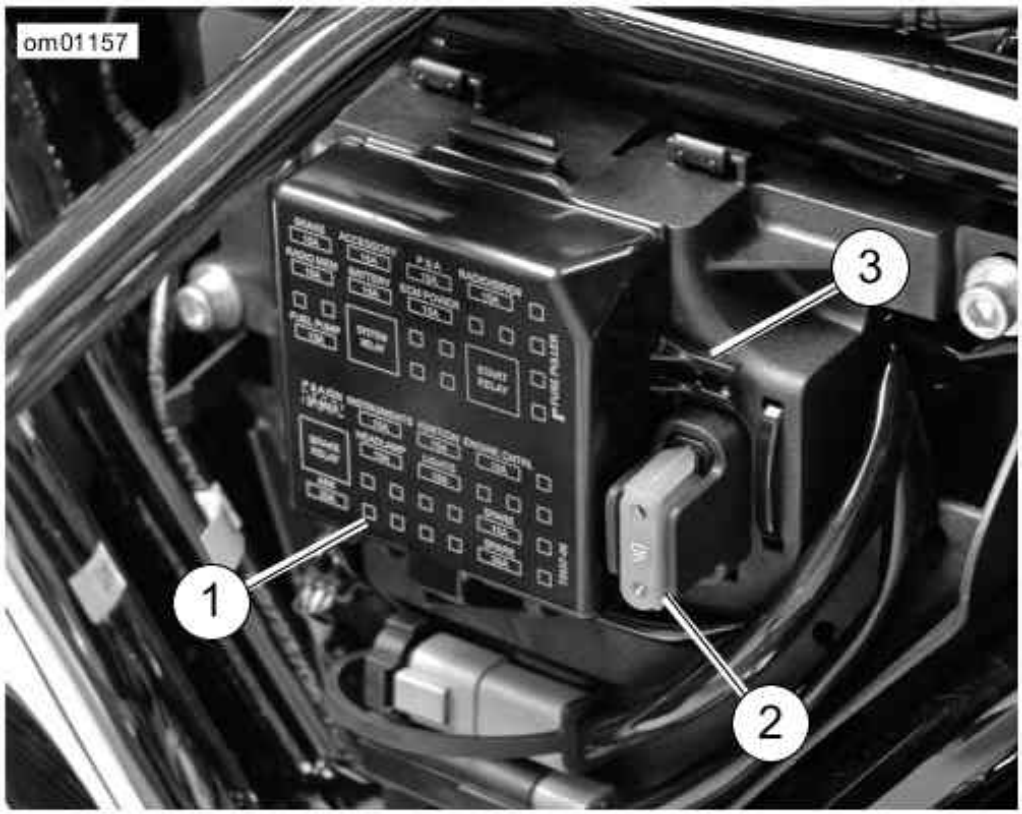

1. Fuse block cover
2. Maxi-fuse
3. Fuse puller

Left Side Cover Removed: Touring Models

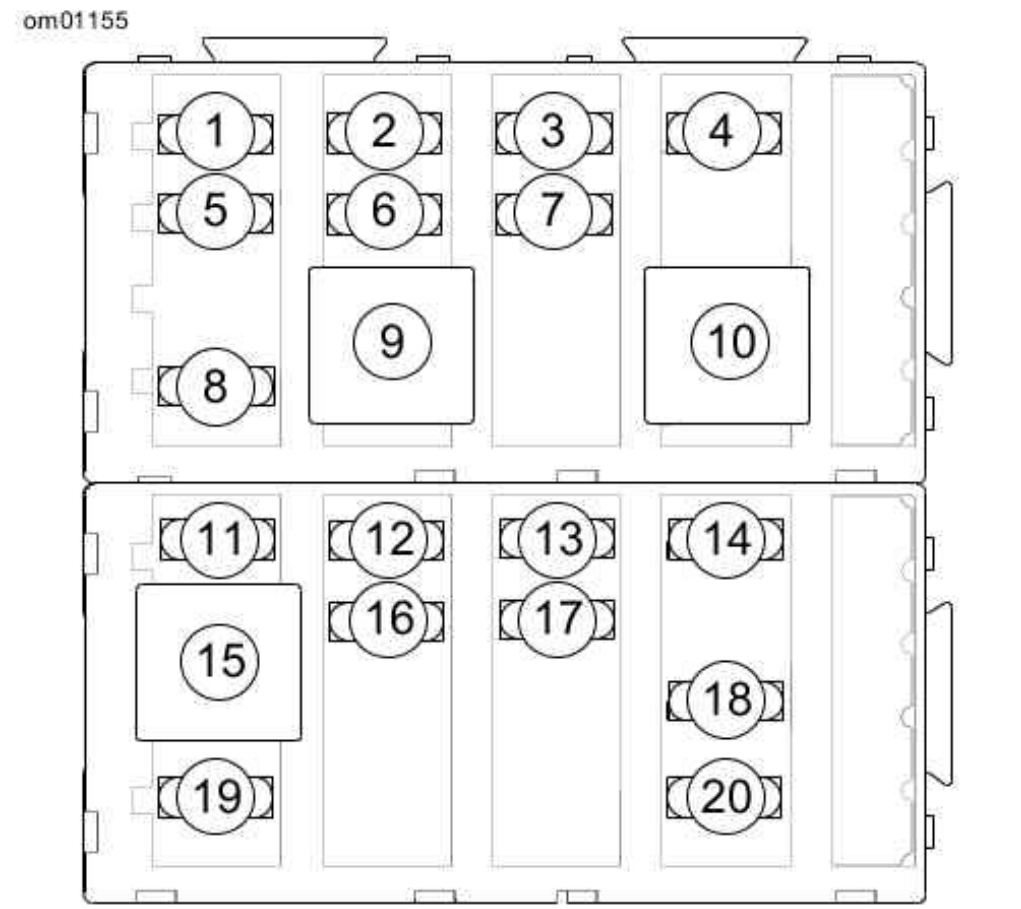

Fuses: Touring Models

Fuses: Touring Models

ITEM	FUSE	ITEM	FUSE	ITEM	FUSE	ITEM	FUSE
1	Brake (15 amp)	2	Accessory (15 amp)	3	P&A (15 amp)	4	Radio power (15 amp)
5	Radio memory (15 amp)	6	Battery (15 amp)	7	ECM power (15 amp)	8	Fuel pump (15 amp)
9	System relay	10	Start relay	11	P&A ignition (2A max)	12	Instruments (15 amp)
13	Ignition (15 amp)	14	Engine control (15 amp)	15	Brake relay	16	Headlamp (15 amp)
17	Lights (15 amp)	18	Spare (15 amp)	19	ABS (30 amp)	20	Spare (30 amp)

Maxi-Fuse

See Maxi-Fuse. A 40 amp maxi-fuse is located at the right side of the fuse block. The maxi-fuse protects the electrical components in the vehicle.

NOTE:

Removal of the maxi-fuse will disable all systems except the starter motor/solenoid.

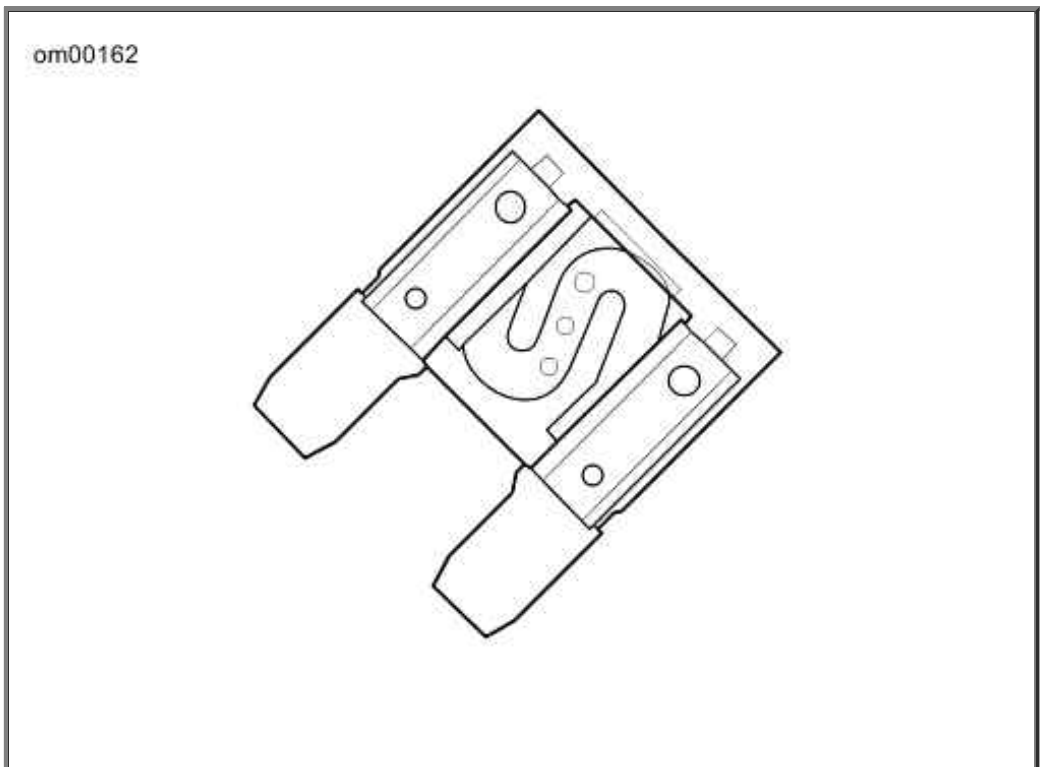

Maxi-Fuse

Seat: FLHT

Removal

CAUTION

Detach passenger seat strap before removing seat. Failure to do so can result in damage to rear fender paint. (00225a)

1. See Seat Strap Bracket Screw (FLHT/C/U). Open left saddlebag cover and remove fastener from seat strap bracket.
2. Pull upward on strap to free it from slot in bracket. Move passenger seat strap to side of seat.
3. Remove fastener to detach seat mounting bracket from top of rear fender.
4. See Seat Tongue: Touring Models. Push seat rearward to free tongue from slot in seat.
5. Detach seat from frame.

Installation

---

1. See Seat Mounting Slot: Touring Models. Place seat on frame backbone.
2. See Seat Tongue: Touring Models. Firmly push front of seat downward and rearward until tongue engages slot in frame backbone.
3. Push seat forward until rear fender seat retention nut is centered in hole of mounting bracket.
4. Install seat mounting fastener. Tighten to 20-40 in-lbs (2.3-4.5 Nm).

   NOTE:

   If the seat retention nut is damaged or lost, see service manual for instructions.

5. See Seat Strap Bracket Screw (FLHT/C/U). Install end of seat strap in slot of seat strap bracket. Install seat strap bracket fastener. Tighten to 48-72 in-lbs (5.4-8.1 Nm).

⚠WARNING

After installing seat, pull upward on seat to be sure it is locked in position. While riding, a loose seat can shift causing loss of control, which could result in death or serious injury. (00070b)

6. Pull up on seat to verify that it is properly secured.

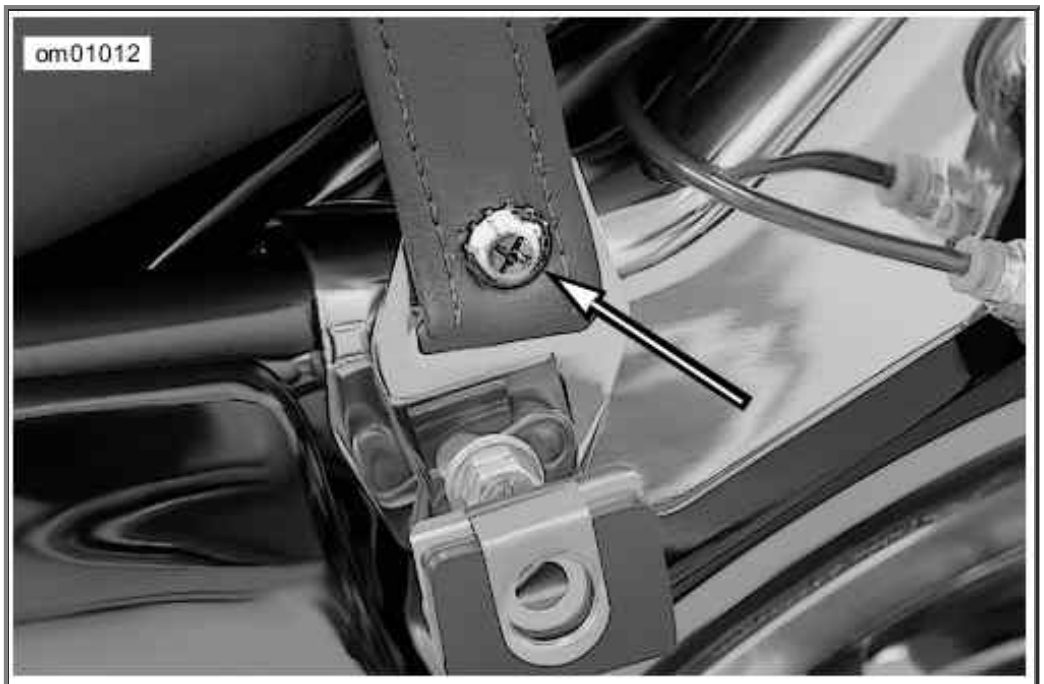

Seat Strap Bracket Screw (FLHT/C/U)

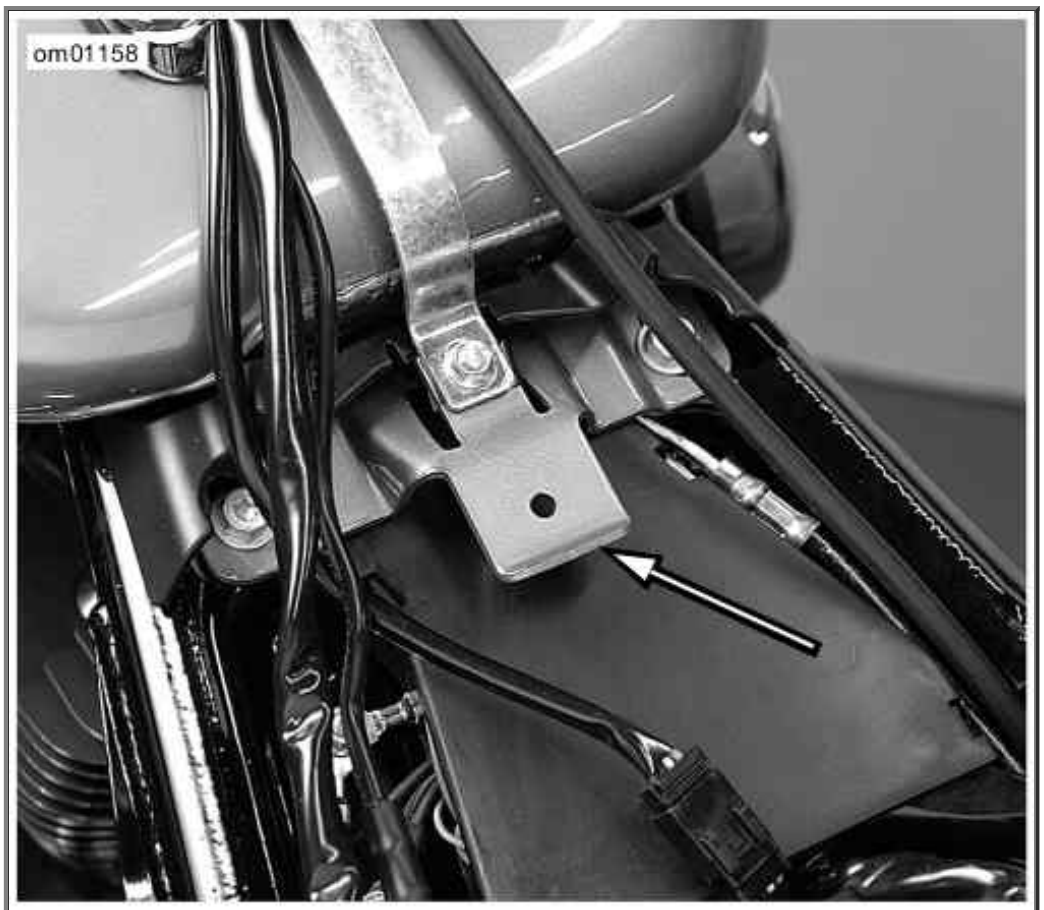

Seat Tongue: Touring Models

Seat Mounting Slot: Touring Models

Seat: FLHTC/U

Removal

1. See Tour-Pak. Open Tour-Pak to move passenger seat backrest out of the way.

   NOTE:

   The Tour-Pak must be positioned to the rear to gain access to the seat mounting bracket screw. If the Tour-Pak is in the forward position, remove Tour-Pak and install in rearward position.

   CAUTION

   Detach passenger seat strap before removing seat. Failure to do so can result in damage to rear fender paint. (00225a)

2. See Seat Strap Bracket Screw (FLHT/C/U). Open left saddlebag cover and remove seat strap bracket fastener.
3. Pull upward on strap to free it from slot in bracket.
4. Move passenger seat strap to side of seat.
5. Remove fastener to detach seat mounting bracket from top of rear fender.
6. To protect finish of Tour-Pak, cover rear seat mounting bracket with palm of hand.
7. See Seat Tongue: Touring Models. While pushing seat forward, raise rear of seat until bracket clears top of Tour-Pak. Push seat rearward slightly to free tongue from slot in seat.

8. Remove seat from frame.

Installation

1. See Seat Mounting Slot: Touring Models. Place seat on frame backbone.
2. To protect finish of Tour-Pak, cover rear seat mounting bracket with palm of hand.
3. While raising rear of seat approximately 3 in. 76.2 mm , use other hand to firmly push front of seat downward and rearward until tongue engages slot in seat.
4. Push seat forward until rear fender seat retention nut is centered in hole of mounting bracket.
5. Install seat mounting fastener. Tighten to 20-40 in-lbs (2.3-4.5 Nm).

   NOTE:

   If the seat retention nut is damaged or lost, see service manual for instructions.

   WARNING

   After installing seat, pull upward on seat to be sure it is locked in position. While riding, a loose seat can shift causing loss of control, which could result in death or serious injury. (00070b)

6. Pull up on seat to verify that it is properly secured, front and rear.
7. See Seat Strap Bracket Screw (FLHT/C/U). Install end of seat strap in slot of seat strap bracket. Install seat strap bracket fastener. Tighten to 48-72 in-lbs (5.4-8.1 Nm).

Seat: FLHR/FLHRC

Removal

1. Remove right saddlebag.
2. See Front Saddle Bracket. Remove bracket bolt with the flat washer that secures seat strap and bracket. Then remove passenger seat strap and saddlebag front mounting bracket from chrome frame tube cover.
3. See Strap Slots: FLHRC. On FLHRC models, the seat strap is routed through slots in the seat. Carefully pull passenger seat strap through slots to remove.
4. Place seat strap on opposite side of vehicle.
5. Remove fastener to detach seat mounting bracket from top of rear fender.
6. Push seat rearward to free tongue from the slot in the seat.
7. Remove seat from frame.

Installation

1. See Seat Mounting Slot: Touring Models. Place seat on frame backbone.
2. Firmly push front of seat downward and rearward until tongue engages slot in seat.
3. Push seat forward until rear fender seat retention nut is centered in hole of mounting bracket.
4. Install seat mounting fastener. Tighten to 20-40 in-lbs (2.3-4.5 Nm).

   NOTE:

   If the seat retention nut is damaged or lost, see service manual for instructions.

   ⚠WARNING

   After installing seat, pull upward on seat to be sure it is locked in position. While riding, a loose seat can shift causing loss of control, which could result in death or serious injury. (00070b)

5. Pull up on seat to verify that it is properly secured, front and rear.
6. See Strap Slots: FLHRC. On FLHRC models, route free end of passenger seat strap to left side of vehicle through slots in the seat.
7. Insert bolt with flat washer through passenger seat strap and slotted hole of saddlebag front mounting bracket.
8. Insert bolt into forward hole in chrome frame tube cover. Snug saddlebag front mounting bracket bolt, but do not tighten.
9. Install saddlebag.

   NOTE:

   If necessary, rotate saddlebag front mounting bracket to align spring plate with hole in saddlebag.

10. Tighten saddlebag front mounting bracket fastener.

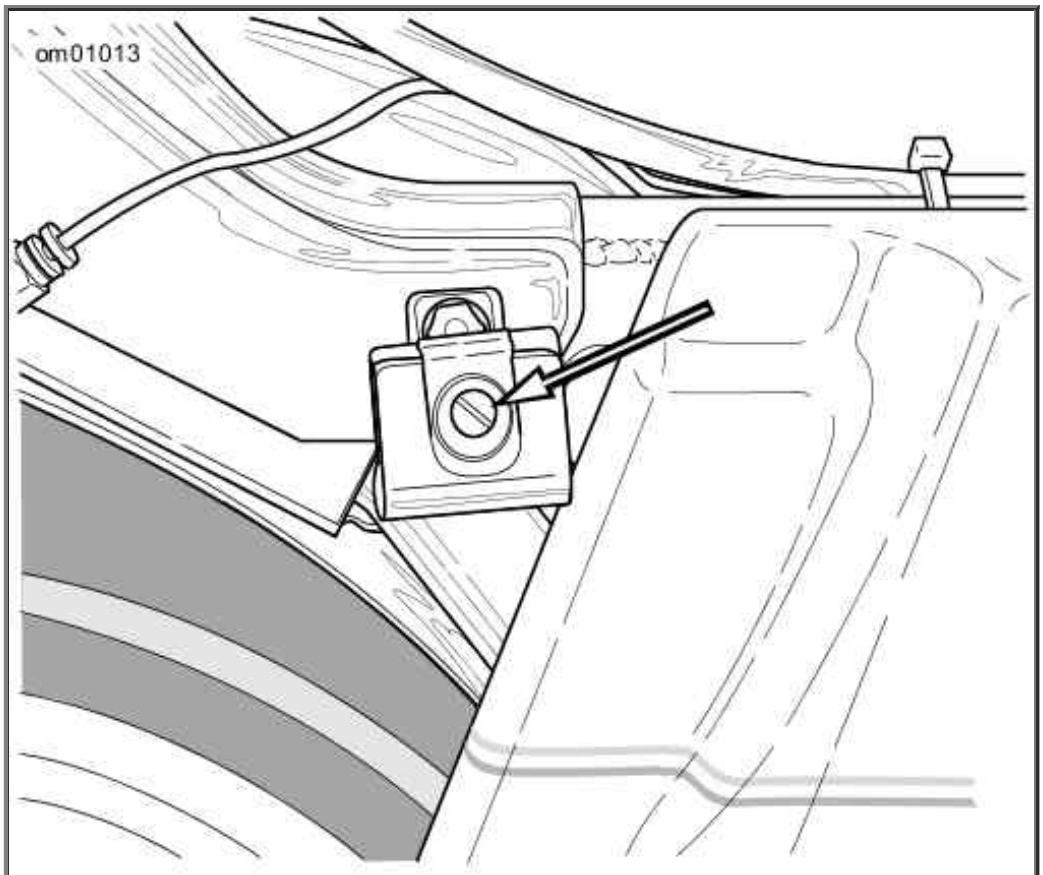

Front Saddle Bracket

Strap Slots: FLHRC

Seat: FLTR/FLHX

Removal

CAUTION

Detach passenger seat strap before removing seat. Failure to do so can result in damage to rear fender paint. (00225a)

1. Remove right saddlebag.
2. See Front Saddle Bracket. Remove bracket bolt with the flat washer that secures seat strap and bracket. Then remove passenger seat strap and saddlebag front mounting bracket from chrome frame tube cover.
3. Draw free end of passenger seat strap to opposite side of vehicle.
4. Remove fastener to detach seat mounting bracket from top of rear fender.
5. See Seat Tongue: Touring Models. Firmly push front of seat downward and rearward until tongue disengages slot in seat.
6. Remove seat from frame.

Installation

1. Place seat on frame backbone.
2. See Seat Tongue: Touring Models. Firmly push front of seat downward and forward until tongue engages slot in seat.
3. Push seat forward until rear fender seat retention nut is centered in hole of mounting bracket.
4. Install seat mounting fastener. Tighten to 20-40 in-lbs (2.3-4.5 Nm).

   NOTE:

   If the seat retention nut is damaged or lost, see service manual for instructions.

⚠WARNING

After installing seat, pull upward on seat to be sure it is locked in position. While riding, a loose seat can shift causing loss of control, which could result in death or serious injury. (00070b)

5. Pull up on seat to verify that it is properly secured, front and rear.
6. Draw free end of passenger seat strap to left side of vehicle.
7. Insert bolt with flat washer through passenger seat strap and slotted hole of saddlebag front mounting bracket. Insert bolt into forward hole in chrome frame tube cover.
8. Fasten saddlebag front mounting bracket bolt, but do not tighten.
9. Install saddlebag.

NOTE:

If necessary, rotate saddlebag front mounting bracket to align spring plate with hole in saddlebag. Check that there is adequate clearance between saddlebag and side cover to prevent paint damage.

10. Tighten saddlebag front mounting bracket fastener.

Placing Motorcycle in Storage

CAUTION

Proper storage is important for the trouble-free operation of your motorcycle. See your Owner's Manual for storage recommendations or see a Harley-Davidson dealer. Improper storage procedures can lead to equipment damage. (00046a)

If the motorcycle will not be operated for several months, such as during the winter season, there are several tasks which should be performed. These steps will protect parts against corrosion, preserve the battery and prevent the build-up of gum and varnish in the fuel system.

⚠WARNING

Do not store motorcycle with gasoline in tank within the home or garage where open flames, pilot lights, sparks or electric motors are present. Gasoline is extremely flammable and highly explosive, which could result in death or serious injury. (00003a)

NOTE:

Make a list of everything you do and fasten it to a handgrip. When you take the motorcycle out of storage, this list will be your reference/checklist to get your motorcycle in operating condition.

1. Fill fuel tank and add a gasoline stabilizer. Use one of the commercially available gasoline stabilizers and follow the manufacturer's instructions.

2. Warm motorcycle to operating temperature. Change oil and turn engine over to circulate the new oil.

3. Check and adjust belt if necessary.

4. Check tire inflation. Adjust to proper inflation pressure.

5. To protect the vehicle's body panels, engine, chassis and wheels from corrosion, follow the cosmetic care procedures described in the Accessory Maintenance section of this owner's manual prior to storage.

6. Prepare battery for winter storage. See Battery: General.

⚠WARNING

Explosive hydrogen gas, which escapes during charging, could cause death or serious injury. Charge battery in a well-ventilated area. Keep open flames, electrical sparks and smoking materials away from battery at all times. KEEP BATTERIES AWAY FROM CHILDREN. (00065a)

7. If the motorcycle is to be stored with security system armed, it will be necessary to connect a Battery Tender to maintain battery charge. If security system will not be armed and a Battery Tender is not available, either:
    a. Disconnect negative battery cable.
    b. Remove Maxi-fuse (if applicable).
8. If motorcycle is to be covered, use a material such as light canvas that will breathe. Plastic materials that do not breathe promote the formation of condensation.

Removing Motorcycle From Storage

⚠WARNING

The clutch failing to disengage can cause loss of control, which could result in death or serious injury. Prior to starting after extended periods of storage, place transmission in gear and push vehicle back and forth several times to assure proper clutch disengagement. (00075a)

1. See Battery: General for proper battery care. Charge and install the battery.
2. Remove and inspect the spark plugs. Replace if necessary.
3. Clean the air cleaner element.
4. Start the engine and run until it reaches normal operating temperature. Turn off engine.
5. Check amount of oil in the oil tank.
6. Check the transmission lubricant level.
7. Check controls to be sure they are operating properly. Operate the front and rear brakes, throttle, clutch and shifter.
8. Check steering for smoothness by turning the handlebars through the full operating range.

⚠WARNING

Be sure tires are properly inflated, balanced and have adequate tread. Inspect your tires regularly and see a Harley-Davidson dealer for replacements. Riding with

excessively worn, unbalanced or under-inflated tires can adversely affect stability and handling, which could result in death or serious injury. (00014a)

9. Check tire pressure. Incorrect pressure will result in poor riding characteristics and can affect handling and stability.
10. Check all electrical equipment and switches including the stop lamp, turn signals and horn for proper operation.
11. Check for any fuel, oil or brake fluid leaks.

CAUTION

Turn engine over a few times to be sure there is no oil in the crankcase and that all oil has been pumped back into the oil tank. Stop engine and re-check oil level. Failure to do so can result in engine damage. (00071a)

Accessories Maintenance

General Maintenance

Maintain chrome and aluminum regularly to check that they retain their original shine and luster. Take care to keep your new Harley-Davidson motorcycle cleaned and waxed as often as possible to inhibit rust and corrosion.

Cleaning Your Motorcycle

To aid you in keeping your motorcycle clean, see your Harley-Davidson dealer for cleaning, polishing and waxing products.

Harley-Davidson recommends the following products:

- SUNWASH® (Part No. 94659-98): for general cleaning/washing of all surfaces.
- BUG REMOVER (Part No. 94657-98): for removing bugs from all surface finishes.
- HARLEY® SPRAY CLEANER (Part No. 99817-99): all purpose cleaner and quick detailer for metal surfaces.
- HARLEY GLOSS® (Part No. 94627-98): all purpose surface protectant provides UV protection and a gloss finish.
- Swirl & Scratch Treatment (Part No. 94655-98): a compound that removes fine scratches and swirls.

⚠WARNING

Observe warnings on labels of cleaning compounds. Failure to follow warnings could result in death or serious injury. (00076a)

⚠WARNING

Do not wash brake discs with cleaners containing chlorine or silicone. Cleaners containing chlorine and silicone can impair brake function, which could result in death or serious injury. (00077a)

CAUTION

Do not use pressure washers to clean wheel bearings, sprocket bearings, steering head bearings and swingarm pivot bearings. Doing so can result in equipment damage. (00489b)

Denim Finish

General

If your vehicle has flat (or matte) finish please read below.

- The Denim finish has qualities which differ from high gloss finishes on all other Harley-Davidson motorcycles. Like denim fabric, Denim paint will burnish or mar with age and use, thus adding character and personality to the finish of the motorcycle.
- If scratched, the color coat of paint does nick/scuff and these marks can not be rubbed out.
- If polished, the finish will become less matte and more glossy over time.

How to Clean

1. For heavier deposits:

    a. Use grease cutting dishwashing detergent and a clean H-D wash-mitt. (Dilute the detergent per the instruction provided by its manufacturer.)

    b. Rinse thoroughly with clean water.

2. For light deposits, use glass cleaner (ammonia base) and H-D Soft Cloth. This helps remove finger prints and light soil.

3. For final detailing use H-D Gloss with H-D Soft Cloth.

Leather Care

NOTE:

Many Harley-Davidson accessories and seats are either made of leather or have leather inserts. Natural materials age differently and require different care than man-made materials. Seat covers and panels made of leather will gain "character", such as wrinkles, with age. Leather is porous and organic and each leather product will settle into its own distinct form with use. Your leather product will mature into its own custom shape and style from the sun, rain and the miles. This maturing is natural and will enhance the custom quality of your Harley-Davidson motorcycle.

Leather must be periodically cleaned and treated to maintain its appearance and extend its life. Clean and treat leather once a season or more frequently under adverse conditions.

CAUTION

Do not use bleach or detergents containing bleach on saddlebags, seats, tank panels or painted surfaces. Doing so can result in equipment damage. (00229a)

- Do not use ordinary soap to clean leather or fur. It could dry or remove the oils from the leather.
- Use ONLY a good quality saddle soap to clean leather. Be sure you rinse saddle soap off thoroughly before treating leather.
- Never try to dry leather quickly, using artificial means. Always let leather dry naturally, at room temperature.

1. Vacuum or blow dust off.
2. Thoroughly clean leather with a good quality saddle soap, following manufacturer's directions. Rinse thoroughly with clean sponge or cloth and water. Allow leather to dry.
3. Once leather is dry, treat with a good quality leather treatment, such as LEATHERCARE (Part No. 98261-91).
4. Always allow leather to dry completely before using.

Whitewall Tires

Use a good quality, commercial whitewall cleaner and follow the manufacturer's directions.

Wheel Care

Some vehicle's wheels are aluminum and do not have a protective coating. Other vehicles have laced wheels with chrome plated rims and zinc or chrome plated spokes. Damage from harsh chemicals, acid based wheel cleaners, brake dust and lack of maintenance can occur. Regular washing and the use of a corrosion protectant will help to maintain their original appearance. Harley-Davidson WHEEL AND TIRE CLEANER (Part No. 94658-98) is recommended for cleaning wheels and tires. Then use HARLEY GLOSS (Part No. 94627-98) to protect the wheel surfaces.

NOTES:

- *It is imperative that the wheels are cared for weekly to guard against pitting and corrosion.*
- *Corrosion of these components is not considered to be a defect in materials or workmanship.*

Harley-Davidson recommends the following products:

- WHEEL AND TIRE CLEANER (Part No. 94658-98): cleaner/degreaser for wheels, tires and engine.
- HARLEY GLOSS (Part No. 94627-98): all purpose surface protection the provides UV protection and a gloss finish.

See a Harley-Davidson dealer for cleaning, polishing and waxing products.

Windshields

CAUTION

Polycarbonate windscreens/windshields require proper attention and care to maintain. Failure to maintain polycarbonate properly can result in damage to the windscreen/windshield. (00483d)

- Do not clean in hot sun or high temperature.
- Powdered, abrasive or alkaline cleanser will damage the windscreen/windshield.

CAUTION

Do not use harsh chemicals including rain sheeting products on Harley-Davidson windshields. They can cause dulling or hazing. If you want to use a windshield protectant on your windshield, try Harley Glaze Polish and Sealant (00231a)

CAUTION

Do not use benzine, paint thinner, gasoline or any other type of harsh cleaner on the windshield. Doing so will damage the windshield surface. (00232a)

NOTES:

- *To remove minor surface scratches use NOVUS® No. 2 SCRATCH REMOVER (Part No. 99836-94T).*
- *Covering the windshield with a clean, wet cloth for approximately 15-20 minutes before washing will make dried bug removal easier.*

1. Use mild soap and warm water to wash the windshield.
2. Wipe dry with a soft, clean towel.

NOTE:

To treat your Lexan windshield with water repellent use WINDSHIELD WATER REPELLENT TREATMENT (Part No. 99841-02).

Miscellaneous Lubrication

Hinges, Latches, Etc.

Lubricate the rub points of latches and hinges using either Lubit-8 Tufoil (Part No. 94968-85TV) or Tri-flow as required.

Lubricate the fingers on the saddlebag latches where they engage the hinge.

Troubleshooting

Troubleshooting: General

⚠WARNING

The troubleshooting section of the Owner's Manual is a guide to diagnose problems. Read the service manual before performing any work. Improper repair and/or maintenance could result in death or serious injury. (00080a)

The following checklist of possible operating troubles and their probable causes will be helpful in keeping your motorcycle in good operating condition. More than one of these conditions may be causing trouble and should be carefully checked.

Engine: Touring Models

Starter Does Not Operate or Does Not Turn Engine Over

1. Engine OFF/RUN switch in OFF position.
2. Ignition switch not ON.
3. Discharged battery or loose or corroded connections (solenoid chatters).
4. Clutch lever not squeezed against handlebar or transmission not in neutral.
5. Jiffy stand not in retracted position (required for international models).
6. Blown fuse.

Engine Turns Over But Does Not Start

1. Fuel tank empty.
2. Fuel filter clogged.
3. Discharged battery or loose or broken battery terminal connections.
4. Fouled spark plugs.
5. Spark plug cable connections loose or in bad condition and shorting.
6. Loose or corroded wire or cable connection(s) at coil or battery.
7. Fuel pump inoperative.
8. Blown fuse.

Starts Hard

1. Spark plugs in bad condition, have improper gap, or are partially fouled.
2. Spark plug cables in bad condition and leaking.
3. Battery nearly discharged.
4. Loose wire or cable connection(s) at one of the battery terminals or at coil.
5. Engine oil too heavy (winter operation).
6. Water or dirt in fuel system.
7. Fuel pump inoperative.

Starts But Runs Irregularly or Misses

1. Spark plugs in bad condition or partially fouled.
2. Spark plug cables in bad condition and leaking.
3. Spark plug gap too close or too wide.
4. Battery nearly discharged.
5. Damaged wire or loose connection at battery terminals or coils.
6. Intermittent short circuit due to damaged wire insulation.
7. Water or dirt in fuel system.
8. Fuel vent system plugged. See dealer.
9. One or more injectors fouled.

A Spark Plug Fouls Repeatedly

1. Fuel mixture too rich.
2. Incorrect spark plug.

Pre-ignition or Detonation (Knocks or Pings)

1. Incorrect fuel.
2. Incorrect spark plug for the kind of service.

Overheats

1. Insufficient oil supply or oil not circulating.
2. Heavy carbon deposit from lugging engine. See dealer.

3. Insufficient air flow over cylinder heads during extended periods of idling or parade duty.

Excessive Vibration

1. Rear fork pivot shaft nuts loose. See dealer.
2. Front engine mounting bolts loose. See dealer.
3. Engine to transmission mounting bolts loose. See dealer.
4. Broken frame. See dealer.
5. Front chain or links tight as a result of insufficient lubrication or belt badly worn.
6. Wheels and/or tires damaged. See dealer.
7. Vehicle not properly aligned. See dealer.

Electrical System

Alternator Does Not Charge

1. Module not grounded. See dealer.
2. Engine ground wire loose or broken. See dealer.
3. Loose or broken wires in charging circuit. See dealer.

Alternator Charge Rate is Below Normal

1. Weak battery.
2. Excessive use of add-on accessories.
3. Loose or corroded connections.
4. Extensive periods of idling or low speed riding.

Transmission

Transmission Shifts Hard

1. Bent shifter rod. See dealer.

Transmission Jumps Out of Gear

1. Worn shifter dogs in transmission. See dealer.

Clutch Slips

1. Clutch controls improperly adjusted. See dealer.
2. Worn friction discs. See dealer.
3. Insufficient clutch spring tension. See dealer.

Clutch Drags or Does Not Release

1. Clutch controls improperly adjusted. See dealer.
2. Primary chaincase overfilled.
3. Clutch discs warped. See dealer.

Clutch Chatters

1. Friction discs or steel discs worn or warped. See dealer.

Brakes

ABS System Behavior

1. ABS lamp does not shut off above 3 mph 5 km/h . See dealer.
2. Other ABS symptoms. Refer to ABS Symptoms and Conditions.

Brakes Do Not Hold Normally

1. Master cylinder low on fluid. See dealer.
2. Brake line contains air bubbles. See dealer.
3. Master or wheel cylinder piston worn. See dealer.
4. Brake pads contaminated with grease or oil. See dealer.
5. Brake pads badly worn. See dealer.
6. Brake disc badly worn or warped. See dealer.
7. Brake fades because of heat build up. Excessive braking or brake pads dragging. See dealer.
8. Brake drags. Insufficient hand lever free play. See dealer.

Warranties and Responsibilities

Warranty and Maintenance

This Owner's Manual contains your new motorcycle warranty.

It is the owner's responsibility to follow the scheduled mileage intervals as specified; all of the specified maintenance services must be performed to keep your warranty valid.

1. Make an appointment with a Harley-Davidson dealer for inspection and service just before you have ridden 1000 miles 1600 kilometers .
2. Bring this Owner's Manual with you when you visit your dealer to have your motorcycle inspected and serviced.
3. Have the dealer technician sign at the proper mileage interval. The records should be retained by the owner as proof of proper maintenance.
4. Keep receipts covering any parts, service or maintenance performed. These records should be transferred to each subsequent owner.

⚠WARNING

Do not use aftermarket parts and custom made front forks which can adversely affect performance and handling. Removing or altering factory installed parts can adversely affect performance and could result in death or serious injury. (00001a)

Harley-Davidson dealerships are independently owned and operated and may sell parts and accessories that are not manufactured or approved by Harley-Davidson. Therefore, you should understand that we are not and cannot be responsible for the quality, suitability, or safety of any non-Harley-Davidson part, accessory or design modification, including labor, which may be sold and/or installed by our dealers.

Keeping It All Harley-Davidson

1. Keep your Harley-Davidson completely Harley-Davidson.
2. Insist that your dealer uses only Genuine replacement parts to keep your Harley-Davidson motorcycle and its warranty intact.

Exacting design and stringent testing ensure performance and warranty coverage. Again, insist on Genuine parts for your genuine Harley-Davidson motorcycle.

NOTE:

Installing off-road or competition parts to enhance performance may void all or part of your new motorcycle warranty. See the Harley-Davidson Limited Warranty in this manual or a Harley-Davidson dealer for details.

CAUTION

It is possible to overload your motorcycle's charging system by adding too many electrical accessories. If your

combined electrical accessories operating at any one time consume more electrical current than your vehicle's charging system can produce, the electrical consumption can discharge the battery and cause vehicle electrical system damage. See a Harley-Davidson dealer for advice about the amount of current consumed by additional electrical accessories, or for necessary wiring changes. (00211b)

Important Moving Information

If you move from your present address, or sell your motorcycle, please fill out and mail the post card at the back of this manual. This is necessary in the event that the Company needs to contact the owner concerning information that could affect the safe operation of this motorcycle.

California Evaporative Emission Controls: 2008 Models

All new model year 2008 Harley-Davidson motorcycles sold in the State of California are equipped with an evaporative emission control system. This system is designed to meet the CARB regulations in effect at the time of manufacture.

The system requires a small amount of maintenance. Periodic inspection is required to make sure hoses are properly routed, not kinked or blocked and that all fittings are secure. Mounting hardware should also be checked periodically for tightness.

EPA Noise Regulations in the United States

EPA noise regulations require that the following statements be included in the Owner's Manual.

TAMPERING WITH NOISE CONTROL SYSTEM PROHIBITED: Federal law prohibits the following acts or the causing thereof: (1) The removal or rendering inoperative by any person other than for purposes of maintenance, repair, or replacement of any device or element of design incorporated into any new vehicle for the purpose of noise control prior to its sale or delivery to the ultimate purchaser or while it is in use, or (2) the use of the vehicle after such device or element of design has been removed or rendered inoperative by any person.

AMONG THOSE ACTS PRESUMED TO CONSTITUTE TAMPERING ARE THE ACTS LISTED BELOW.

1. Replacing the muffler(s) and/or the entire exhaust system with parts not certified to be noise legal for street use.
2. Removing or modifying the muffler internal baffles in any way.
3. Replacing the air intake/cleaner assembly with one not certified to be noise legal for street use.
4. Modifying the air intake/cleaner assembly in such a way as to make the vehicle no longer noise legal for street use.

Harley-Davidson recommends that any and all noise related maintenance be done by an authorized Harley-Davidson dealer using genuine Harley-Davidson parts.

Warranty/Service Information

Any authorized Harley-Davidson dealer is responsible for providing the warranty repair work on your motorcycle. If you have any questions regarding warranty obligations contact your selling dealer.

For normal service work or warranty work under the above conditions, you may obtain the name and location of your nearest U.S. Harley-Davidson dealer by calling 1-800-490-9635 (toll free), in any state except Alaska and Hawaii.

NOTE:

The number shown above is accessible only with a touch-tone phone in the United States.

Reporting Safety Defects in United States

Safety defects must be reported to the National Highway Traffic Safety Administration (NHTSA) and Harley-Davidson.

NHTSA Statement

If you believe that your vehicle has a defect which could cause a crash or could cause injury or death, you should immediately inform the National Highway Traffic Safety Administration (NHTSA) in addition to notifying Harley-Davidson.

If NHTSA receives similar complaints, it may open an investigation, and if it finds that a safety defect exists in a group of vehicles, it may order a recall and remedy campaign. However, NHTSA cannot become involved in individual problems between you, your dealer, or Harley-Davidson.

To contact NHTSA, refer to NHTSA Contacts.

NHTSA Contacts

ITEM	DATA
Phone	Call the Auto Safety Hot Line toll-free at 1-888-DASH-2DOT
Mail	U.S. Department of Transportation, National Highway Traffic Safety Administration, Office of Defects Investigation, NVS-210, 400 7th Street S.W., Washington, D.C. 20590
Web site	www.nhtsa.dot.gov

You can also obtain other information about motor vehicle safety from the hot line.

Owner Transfer Identification Form

When purchasing a pre-owned Harley-Davidson or Buell, we encourage you to submit an Owner Transfer Notification Form. It is critical that new owner information is communicated to Harley-

Davidson. New owner information is required to be on file with Harley-Davidson to transfer an Extended Service Plan Contract. Harley-Davidson is also required by the National Traffic and Motor Vehicle Safety Act to notify all owners in the event of a recall. The form may be obtained at any Harley-Davidson dealer.

Required Documentation for Imported Motorcycles

If a Harley-Davidson is imported into the United States, additional documentation is required to be eligible for the United States Manufacturer's Limited Warranty. A Harley-Davidson dealer can provide a form explaining the requirements.

Limited Motorcycle Warranty

2008 HARLEY-DAVIDSON MOTORCYCLE LIMITED WARRANTY

---

24 Months/Unlimited Miles

Harley-Davidson warrants for any new 2008 Harley-Davidson motorcycle/sidecar that an authorized Harley-Davidson dealer will repair or replace without charge any parts found under normal use to be defective in factory materials or workmanship. Such repair and replacement will be Harley-Davidson's sole obligation and the customer's sole remedy under this warranty.

THERE IS NO OTHER EXPRESS WARRANTY (OTHER THAN THE SEPARATE EMISSIONS AND NOISE WARRANTIES) ON THE MOTORCYCLE. ANY IMPLIED WARRANTY OF MERCHANTABILITY OR FITNESS FOR PARTICULAR PURPOSE IS LIMITED TO THE DURATION OF THIS WARRANTY.

Some states do not allow limitations on how long an implied warranty lasts, so the above limitation may not apply to you.

TO THE FULLEST EXTENT ALLOWED BY LAW, HARLEY-DAVIDSON AND ITS DEALERS SHALL NOT BE LIABLE FOR LOSS OF USE, INCONVENIENCE, LOST TIME, COMMERCIAL LOSS OR OTHER INCIDENTAL OR CONSEQUENTIAL DAMAGES. Some states do not allow the exclusion or limitation of incidental or consequential damages, so the above limitation or exclusion may not apply to you. This warranty gives you specific legal rights, and you may have other rights which vary from state to state.

The following terms and conditions apply to this warranty:

Duration

---

1. The duration of this limited warranty is twenty four months, starting from the earlier of (a) the date of initial retail purchase and delivery from an authorized Harley-Davidson dealer, or (b) the third anniversary of the last day of the model year of the motorcycle/sidecar. Your dealer will submit an electronic Sales and Warranty Registration form to initiate your warranty.

2. Any unexpired portion of this limited warranty will be transferred to subsequent owners, upon the resale of the motorcycle/sidecar during the warranty period.

Owner's Obligations

To obtain warranty service, return your motorcycle/sidecar at your expense within the warranty period to an authorized dealer. Our dealer should be able to provide warranty service during normal business hours and as soon as possible, depending upon the workload of the dealer's service department and the availability of necessary parts.

Harley-Davidson Motor Company, P.O. Box 653, Milwaukee, Wisconsin 53201, U.S.A.

Exclusions

This warranty will not apply to any motorcycle/sidecar as follows:

1. Which has not been operated or maintained as specified in the Owner's Manual.
2. Which has been abused, misused, improperly stored, used "off the highway," or used for racing or competition of any kind.
3. Which is not manufactured to comply with the laws of the market in which it is registered.
4. Installing off-road or competition parts to enhance performance may void all or part of your new motorcycle warranty. See a Harley-Davidson dealer for details.

Other Limitations

This warranty does not cover:

1. Parts and labor for normal maintenance as recommended in the Owner's Manual, or the replacement of parts due to normal wear and tear including such items as the following: tires, lubrication, oil and filter change, fuel system cleaning, battery maintenance, engine tune-up, spark plugs, brake, clutch and chain/belt adjustment (including chain replacement).
2. Cosmetic concerns that arise as a result of owner abuse, lack of proper maintenance or environmental conditions (except concerns that result from defects in material or workmanship, which are covered by this warranty for the duration of the warranty period).
3. Any cosmetic condition existing at the time of retail delivery that has not been documented by the selling dealer prior to retail delivery.
4. Defects or damage to the motorcycle caused by alterations outside of Harley-Davidson factory specifications.

Important: Read Carefully

1. Our dealers are independently owned and operated and may sell other products. Because of this, HARLEY-DAVIDSON IS NOT RESPONSIBLE FOR THE SAFETY, QUALITY, OR SUITABILITY OF ANY NON-HARLEY-DAVIDSON PART, ACCESSORY OR DESIGN MODIFICATION INCLUDING LABOR WHICH MAY BE SOLD AND/OR INSTALLED BY OUR DEALERS.
2. This warranty is a contract between you and the manufacturer. It is separate and apart from any warranty you may receive or purchase from the dealer. The dealer is not authorized to alter, modify, or in any way change the terms and conditions of this warranty.

3. Any warranty work or parts replacement authorized by the manufacturer will not preclude the manufacturer from later relying on any exclusion where applicable.

Limited Noise Warranty

2008 HARLEY-DAVIDSON MOTORCYCLE NOISE CONTROL SYSTEM LIMITED WARRANTY

The following warranty applies to the noise control system, is in addition to the MOTORCYCLE LIMITED WARRANTY and EMISSION CONTROL SYSTEM LIMITED WARRANTY, and applies only to motorcycles sold in the U.S.

Harley-Davidson Motor Company warrants that this vehicle is designed and built so as to conform at the time of sale with applicable regulations of the U.S. Environmental Protection Agency (as tested following F-76 Drive-By test procedure) and that it is free from defects in materials and workmanship which would cause this motorcycle not to meet U.S. Environmental Protection Agency Standards within 1 year or 3,730 miles (6,000 kilometers) whichever expires first. Any unexpired portion of this limited warranty will be transferred to subsequent owners, upon the resale of the motorcycle during the warranty period.

THERE IS NO OTHER EXPRESS WARRANTY (OTHER THAN THE SEPARATE MOTORCYCLE AND EMISSIONS WARRANTIES) ON THE MOTORCYCLE. ANY IMPLIED WARRANTY OF MERCHANTABILITY OR FITNESS FOR PARTICULAR PURPOSE IS LIMITED TO THE DURATION OF THIS WARRANTY.

Some states do not allow limitations on how long an implied warranty lasts, so the above limitation may not apply to you.

The warranty period shall begin on the date the motorcycle is delivered to the first retail purchaser or, if the motorcycle is placed in service as a demonstrator or company vehicle prior to sale at retail, on the date it is first placed in service.

THE FOLLOWING ITEMS ARE NOT COVERED BY THE NOISE CONTROL SYSTEM WARRANTY

1. Failures which arise as a result of misuse, alterations, or accident as specified in the Owner's Manual.

2. Replacing, removing, or modifying any portion of the NOISE CONTROL SYSTEM (consisting of the exhaust system and air intake/cleaner assembly) with parts not certified to be legal for street use.

3. Any motorcycle on which the odometer mileage has been changed so that the mileage cannot be determined.

4. TO THE FULLEST EXTENT ALLOWED BY LAW, HARLEY-DAVIDSON AND ITS DEALERS SHALL NOT BE LIABLE FOR LOSS OF USE, INCONVENIENCE, LOST TIME, COMMERCIAL LOSS OR OTHER INCIDENTAL OR CONSEQUENTIAL DAMAGES.

Some states do not allow the exclusion or limitation of incidental or consequential damages, so the above limitation or exclusion may not apply to you.

Other Rights

This warranty gives you specific legal rights, and you may have other rights which vary from state to state.

Recommendations for Required Maintenance

It is recommended that any noise system maintenance be performed by an authorized Harley-Davidson dealer using genuine Harley-Davidson replacement parts. The maintenance, replacement or repair of the noise control system may be performed by any other qualified service outlet or individual. Non-genuine parts may be used only if such parts are certified to comply with U.S. Environmental Protection Agency Standards.

Harley-Davidson Motor Company, P.O. Box 653, Milwaukee, Wisconsin 53201, U.S.A.

Limited Emission Warranty

2008 HARLEY-DAVIDSON EMISSION CONTROL SYSTEM LIMITED WARRANTY

The following warranty applies to the emission control system, is in addition to the LIMITED MOTORCYCLE WARRANTY and NOISE CONTROL SYSTEM LIMITED WARRANTY, and applies only to motorcycles sold in the U.S.

Harley-Davidson Motor Company warrants that this vehicle is designed and built so as to conform at the time of sale with applicable regulations of the U.S. Federal Environmental Protection Agency, and that it is free from defects in materials and workmanship which would cause this motorcycle not to meet U.S. Environmental Protection Agency Standards within 5 years or 18,641 miles (30,000 kilometers) whichever expires first. Any unexpired portion of this limited warranty will be transferred to subsequent owners, upon the resale of the motorcycle during the warranty period.

THERE IS NO OTHER EXPRESS WARRANTY (OTHER THAN THE SEPARATE MOTORCYCLE AND NOISE WARRANTIES) ON THE MOTORCYCLE. ANY IMPLIED WARRANTY OF MERCHANTABILITY OR FITNESS FOR PARTICULAR PURPOSE IS LIMITED TO THE DURATION OF THIS WARRANTY.

Some states do not allow limitations on how long an implied warranty lasts, so the above limitation may not apply to you.

The warranty period shall begin on the date the motorcycle is delivered to the first retail purchaser or, if the motorcycle is placed in service as a demonstrator or company vehicle prior to sale at retail, on the date it is first placed in service.

THE FOLLOWING ITEMS ARE NOT COVERED BY THE EMISSION CONTROL SYSTEM WARRANTY

1. Failures which arise as a result of misuse, alterations, accident or non-performance of maintenance as specified in the Owner's Manual.

2. The replacement of parts (such as spark plugs, fuel and oil filters, etc.) used in required maintenance.

3. Any motorcycle on which the odometer mileage has been changed so that the mileage cannot be determined.

4. TO THE FULLEST EXTENT ALLOWED BY LAW, HARLEY-DAVIDSON AND ITS DEALERS SHALL NOT BE LIABLE FOR LOSS OF USE, INCONVENIENCE, LOST TIME, COMMERCIAL LOSS OR OTHER INCIDENTAL OR CONSEQUENTIAL DAMAGES.

Some states do not allow the exclusion or limitation of incidental or consequential damages, so the above limitation or exclusion may not apply to you.

Other Rights

This warranty gives you specific legal rights, and you may have other rights which vary from state to state.

Recommendations for Required Maintenance

It is recommended that any emission system maintenance be performed by an authorized Harley-Davidson dealer using genuine Harley-Davidson replacement parts. The maintenance, replacement or repair of the emissions control system may be performed by any other qualified service outlet or individual. Non-genuine parts may be used only if such parts are certified to comply with U.S. Environmental Protection Agency Standards.

Harley-Davidson Motor Company, P.O. Box 653, Milwaukee, Wisconsin 53201, U.S.A.

Limited Radio Warranty

2008 LIMITED RADIO WARRANTY

Harley-Davidson Motor Company warrants that this Harley-Davidson radio will be free from factory defects in material and workmanship, under normal use and service, for a period of twenty four (24) months starting from the earlier of (a) the date of initial retail purchase of the motorcycle/sidecar on which the radio is installed, or (b) the third anniversary of the last day of the model year of the motorcycle/sidecar on which the radio is installed. Any unexpired portion of this limited warranty will be transferred to subsequent owners, upon the resale of the motorcycle during the warranty period. If the motorcycle/sidecar was used as a demonstrator, then the warranty period may have started and/or expired prior to the initial retail sale. See a Harley-Davidson Dealer for details.

This warranty does not cover defects or damage due to abuse, misuse or improper installation, or any radio on a motorcycle which has been registered with Harley-Davidson Motor Company as a collector's vehicle. See a Harley-Davidson dealer for details.

To obtain warranty service, return your motorcycle/sidecar with sound system intact, at your expense, within the warranty period to the selling dealer, or to any other authorized dealer if you have moved a long distance, or are touring a long distance. Our dealer should be able to provide warranty service during his normal business hours and as soon as possible, depending upon his service department's workload and the availability of necessary parts.

The remedy for breach of this warranty is expressly limited to the repair or replacement, without charge for parts and labor, of any part that proves to be defective, AND DOES NOT EXTEND TO LIABILITY FOR CONSEQUENTIAL DAMAGES, COSTS OR EXPENSES, INCLUDING LOSS OF TIME, INCONVENIENCE OR LOSS OF USE OF THE VEHICLE, RESULTING FROM ANY PART THAT PROVES TO BE DEFECTIVE.

THERE IS NO OTHER EXPRESS WARRANTY ON THE RADIO. ANY IMPLIED WARRANTY RELATING TO THIS RADIO, INCLUDING WARRANTIES OR MERCHANTABILITY OR FITNESS FOR A PARTICULAR PURPOSE, IS EXPRESSLY LIMITED TO TWENTY FOUR (24) MONTHS, THE DURATION OF THIS WARRANTY.

(Some states do not allow the limitation of the length of an implied warranty or the exclusion or limitation of incidental or consequential damages, so the above limitations or exclusions may not apply to you.)

Other Rights

This warranty gives you specific legal rights, and you may have other rights which vary from state to state in the United States.

Harley-Davidson Motor Company, P.O. Box 653, Milwaukee, Wisconsin 53201, U.S.A.

Maintenance Scheduling

Regular Service Intervals

Regular lubrication and maintenance will help keep your new Harley-Davidson operating at peak performance. Your Harley-Davidson dealer knows best how to service your motorcycle with factory approved methods and equipment assuring you of thorough and competent workmanship.

NOTES:

- *Refer to Regular Service Intervals: 2008 Touring Models. Regular maintenance interval operations are required to keep your new motorcycle warranty in force. The use of other than Harley-Davidson approved parts and service procedures may void the warranty. Any alterations to the emission system components, such as the exhaust system, may be in violation of Federal and State laws.*
- *Refer to Owner's Maintenance Records. When servicing your motorcycle, bring this owner's manual to the dealership and complete information needed in the blank columns listed.*

⚠WARNING

Perform the service and maintenance operations as indicated in the regular service interval table. Lack of regular maintenance at the recommended intervals can affect the safe operation of your motorcycle, which could result in death or serious injury. (00010a)

⚠WARNING

If you operate your motorcycle under adverse conditions (severe cold, extreme heat, very dusty environment, very bad roads, through standing water, etc.), you should perform the regular maintenance intervals more frequently to ensure the safe operation of your motorcycle. Failure to maintain your motorcycle could result in death or serious injury. (00094a)

Regular Service Intervals: 2008 Touring Models

ITEM SERVICED	PROCEDURE	1000 MI. 1600 KM	5000 MI. 8000 KM	10,000 MI. 16,000 KM	15,000 MI. 24,000 KM	20,000 MI. 32,000 KM	25,000 MI. 40,000 KM	NOTES
Engine oil and filter	Replace	X	X	X	X	X	X	
Oil lines and brake system	Inspect for leaks	X	X	X	X	X	X	1
Air cleaner	Inspect, service as required	X	X	X	X	X	X	
Tires	Check pressure, inspect tread	X	X	X	X	X	X	
Wheel spokes	Check tightness	X	X			X		1
Primary chaincase lubricant	Replace	X		X		X		
Transmission lubricant	Replace	X				X		
Clutch	Check adjustment	X	X	X	X	X	X	1
Rear belt and sprockets	Inspect, adjust belt	X	X	X	X	X	X	1
Rear wheel sprocket isolators	Inspect for wear							5
Brake and clutch controls	Check, adjust and lubricate	X	X	X	X	X	X	1
Jiffy stand	Inspect and lubricate	X	X	X	X	X	X	1
Fuel lines and fittings	Inspect for leaks	X	X	X	X	X	X	1
Fuel tank filter	Replace						X	1
Brake fluid	Check levels and condition	X	X	X	X	X	X	4
Brake pads and discs	Inspect for wear	X	X	X	X	X	X	
Spark plugs	Inspect	X	X	X	X		X	
	Replace					X		
Electrical equipment and switches	Check operation	X	X	X	X	X	X	
Front fork oil	Replace							1, 2
Steering head bearings	Lubricate	X		X		X		2
	Adjust						X	1
Air suspension	Check pressure, operation and leakage	X	X	X	X	X	X	1
Windshield	Inspect			X		X		1

bushings (if applicable)								
Fuel door, Tour-Pak, saddlebags	Lubricate hinges and latches	X	X	X	X	X	X	
Critical fasteners	Check tightness	X		X		X		1
Engine mounts and stablizers	Inspect			X		X		1
Battery	Check battery and clean connections							3
Exhaust system	Inspect for leaks, cracks, and loose or missing fasteners or heat shields	X	X	X	X	X	X	3
Road test	Verify component and system functions	X	X	X	X	X	X	
NOTES:	1. Should be performed by an authorized Harley-Davidson dealer, unless you have the proper tools, service data and are mechanically qualified. 2. Disassemble, lubricate and inspect every 50,000 miles 80,000 kilometers . 3. Perform annually. 4. Change D.O.T. 4 and flush brake system every two years. 5. Perform at each rear tire change.							

Owner's Maintenance Records

SERVICE MILE INTERVAL	DATE	DEALER NUMBER	TECHNICIAN NAME	TECHNICIAN SIGNATURE
1000 MI 1600 KM				
5000 MI 8000 KM				
10,000 MI 16,000 KM				
15,000 MI 24,000 KM				
20,000 MI 32,000 KM				
25,000 MI 40,000 KM				
30,000 MI 48,000 KM				
35,000 MI 56,000 KM				
40,000 MI 64,000 KM				
45,000 MI 72,000 KM				
50,000 MI 80,000 KM				

Service Literature

Refer to Service Literature: 2008 Touring Models. Visit any Harley-Davidson dealer or go to www.harley-davidson.com to purchase a service or parts manual for your motorcycle. Factory authorized manuals are the most complete and detailed source of information outside of your Harley-Davidson dealer.

Service Literature: 2008 Touring Models

DOCUMENT	LANGUAGE	PART NUMBER
Touring Models Service Manual	English	99483-08
Touring Models Electrical Diagnostics Manual	English	99497-08
Touring Models Service and Electrical Diagnostics Manual	French	99483-08F
Touring Models Service and Electrical Diagnostics Manual	German	99483-08G
Touring Models Service and Electrical Diagnostics Manual	Spanish	99483-08S
Touring Models Service and Electrical Diagnostics Manual	Italian	99483-08I
Touring Models Parts Catalog	English	99456-08
Sidecar Service Manual	English	99485-08

H-D Michigan, Inc. Trademark Information

Harley, Harley-Davidson, H-D, Bar & Shield, Digital Tech, Digital Technician, Destroyer, Deuce, Dyna, Electra Glide, Evolution, Fat Boy, Glaze, Gloss, H-D, H-Dnet.com, HD, Harley, Heritage Softail, Heritage Springer, Low Rider, Night Rod, Night Train, Profile, Revolution, Road Glide, Road King, Rocker, Softail, Sportster, Sun Ray, Sunwash, Tech Link, Twin Cam 88, Twin Cam 88B, Twin Cam 96, Twin Cam 96B, Twin Cam 103, Twin Cam 103B, Twin Cam 110, Twin Cam 110B, Tour-Pak, Screamin' Eagle, Softail, Super Guide, Super Premium, SYN3, Ultra Glide, V-Rod, VRSC, V-Rod, VRSC, Wide Glide, and Harley-Davidson Genuine Motor Parts and Genuine Motor Accessories are among the trademarks of H-D Michigan, Inc.