Safety First

Safe Operating Rules

WARNING

Motorcycles are different from other vehicles. They operate, steer, handle and brake differently. Unskilled or improper use could result in loss of control, death or serious injury. (00556c)

- Take a rider training course.
- Read owner's manual before riding, adding accessories or servicing.
- Wear a helmet, eye protection and protective clothing.
- Never tow a trailer.

Before operating your motorcycle, read and follow the operating and maintenance instructions in this manual. Follow these basic rules for your personal safety.

- Know and respect the rules of the road. Carefully read and familiarize yourself with the motorcycle safety information provided by your country or state. Read the RIDING TIPS booklet in your owner's kit (in the U.S.) and the MOTORCYCLE HANDBOOK from your state or regional traffic authority. The RIDING TIPS booklet is also available on www.msf-usa.org. See Rules of the Road.
- Before starting engine, check for proper operation of brake, clutch, shifter, throttle controls, correct fuel and oil supply.

WARNING

Harley-Davidson parts and accessories are designed for Harley-Davidson motorcycles. Using non-Harley-Davidson parts or accessories can adversely affect performance, stability or handling, which could result in death or serious injury. (00001b)

- Use only Harley-Davidson approved parts and accessories. Use of certain other manufacturer's performance parts may void your new motorcycle warranty, except where prohibited by law. See your Harley-Davidson dealer for details.

WARNING

Stop the engine when refueling or servicing the fuel system. Do not smoke or allow open flame or sparks near gasoline. Gasoline is extremely flammable and highly explosive, which could result in death or serious injury. (00002a)

When refueling your motorcycle, observe the following rules.

- Refuel in a ventilated area with the engine turned off.
- Remove fuel filler cap slowly.
- Do not smoke or allow open flames or sparks when refueling or servicing the fuel system.
- Do not fill fuel tank above the bottom of the filler neck insert.
- Leave air space to allow for fuel expansion.

⚠WARNING

Do not store motorcycle with gasoline in tank within the home or garage where open flames, pilot lights, sparks or electric motors are present. Gasoline is extremely flammable and highly explosive, which could result in death or serious injury. (00003a)

⚠WARNING

Engine exhaust from this product contains chemicals known to the State of California to cause cancer, and birth defects or other reproductive harm. (00004f)

⚠WARNING

Do not run motorcycle in a closed garage or confined area. Inhaling motorcycle exhaust, which contains poisonous carbon monoxide gas, could result in death or serious injury. (00005a)

⚠WARNING

The jiffy stand locks when placed in the full forward (down) position with vehicle weight on it. If the jiffy stand is not in the full forward (down) position with vehicle weight on it, the vehicle can fall over which could result in death or serious injury. (00006a)

⚠WARNING

Be sure jiffy stand is fully retracted before riding. If jiffy stand is not fully retracted, it can contact the road surface causing a loss of vehicle control, which could result in death or serious injury. (00007a)

- A new motorcycle must be operated according to the special break-in procedure. See Break-In Riding Rules.
- Operate motorcycle at moderate speed and out of traffic until you become thoroughly familiar with its operation and handling characteristics under all conditions.

NOTE:

Harley-Davidson recommends that you obtain information and formal training in the correct motorcycle riding technique. In the United States, both the Harley-Davidson Riding Academy (1-414-343-4056) and the Motorcycle Safety Foundation (1-800-446-9227) offer beginning and advanced rider safety courses.

⚠WARNING

Travel at speeds appropriate for road and conditions and never travel faster than posted speed limit. Excessive speed can cause loss of vehicle control, which could result in death or serious injury. (00008a)

- Do not exceed the legal speed limit or drive too fast for existing conditions. Always reduce speed when poor driving conditions exist. High speed increases the influence of any other condition affecting stability and increases the possibility of loss of control.
- Pay strict attention to road surfaces and wind conditions. Keep both hands on the handlebar grips when riding the motorcycle. Any two-wheeled vehicle may be subject to upsetting forces such as wind blasts from passing trucks, holes in the pavement, rough road surfaces and rider control error. These forces may influence the handling characteristics of your motorcycle. If you experience these conditions, reduce speed and guide the motorcycle with a relaxed grip to a controlled condition. Do not brake abruptly or force the handlebar. This may aggravate an unstable condition.
- Keep cargo weight concentrated close to the motorcycle and as low as possible to minimize the change in the motorcycle's center of gravity. Distribute weight evenly on both sides of the vehicle. Do not load bulky items too far behind the rider or add weight to the handlebars or front forks. Do not exceed maximum specified load in each saddlebag.

NOTE:

New riders should gain experience under various conditions while riding at moderate speeds.

- Operate your motorcycle defensively. Remember, a motorcycle does not afford the same protection as an automobile in an accident. One common risk for an accident occurs when another vehicle turns left in front of an on-coming motorcyclist. Operate only with headlamp on.
- Wear an approved helmet, clothing and foot gear suited for motorcycle riding. Bright or light colors are best for greater visibility in traffic, especially at night. Avoid loose, flowing garments and scarves.

⚠WARNING

Avoid contact with exhaust system and wear protective clothing that completely covers legs while riding. Exhaust pipes and mufflers get very hot when engine is running and remain too hot to touch, even after engine is turned off. Failure to wear protective clothing could result in burns or other serious injury. (00009a)

- When carrying passengers, it is your responsibility to instruct them on proper riding procedures. See the RIDING TIPS booklet included in your owner's kit (in the U.S.) or available on www.msf-usa.org.

- Do not allow other individuals, under any circumstances, to operate your motorcycle unless you know that they are experienced and licensed riders. Make sure they are thoroughly familiar with the operation of your particular motorcycle.

- Protect your motorcycle against theft. Using the fork lock immediately after parking your motorcycle will discourage unauthorized use or theft.
- Safe motorcycle operation requires alert mental judgment combined with a defensive driving attitude. Do not allow fatigue, alcohol or drugs to endanger your safety or that of others.
- For vehicles with a sound system, adjust the volume to a non-distracting level before operating vehicle.
- Proper care and maintenance, including tire pressure, tire condition, tread depth and proper adjustment to steering head bearings are important to the stability and safe operation of the motorcycle. Maintain your motorcycle in proper operating condition. Refer to Regular Service Intervals: 2016 Harley-Davidson Touring Models.

⚠WARNING

Do not operate vehicle with forks locked. Locking the forks restricts the vehicle's turning ability, which could result in death or serious injury. (00035a)

⚠WARNING

Perform the service and maintenance operations as indicated in the regular service interval table. Lack of regular maintenance at the recommended intervals can affect the safe operation of your motorcycle, which could result in death or serious injury. (00010a)

⚠WARNING

Do not operate motorcycle with loose, worn or damaged steering or suspension systems. Contact a Harley-Davidson dealer for repairs. Loose, worn or damaged steering or suspension components can adversely affect stability and handling, which could result in death or serious injury. (00011a)

⚠WARNING

Regularly inspect shock absorbers and front forks. Replace leaking, damaged or worn parts that can adversely affect stability and handling, which could result in death or serious injury. (00012a)

⚠WARNING

Use Harley-Davidson replacement fasteners. Aftermarket fasteners can adversely affect performance, which could result in death or serious injury. (00013a)

- See your Harley-Davidson service manual for proper torque values.
- Aftermarket fasteners may not have the specific property requirements to perform properly.

CAUTION

When lifting a motorcycle using a jack, be sure jack contacts both lower frame tubes where down tubes and lower frame tubes converge. Never lift by jacking on cross-members, oil pan, mounting brackets, components or housings. Failure to comply can cause serious damage resulting in the need to perform major repair work. (00586d)

⚠WARNING

Be sure tires are properly inflated, balanced, undamaged, and have adequate tread. Inspect your tires regularly and see a Harley-Davidson dealer for replacements. Riding with excessively worn, unbalanced, improperly inflated, overloaded or damaged tires can lead to tire failure and adversely affect stability and handling, which could result in death or serious injury. (00014b)

⚠WARNING

Replace punctured or damaged tires. In some cases, small punctures in the tread area may be repaired from within the removed tire by a Harley-Davidson dealer. Speed should NOT exceed 50 mph (80 km/h) for the first 24 hours after repair, and the repaired tire should NEVER be used over 80 mph (130 km/h). Failure to follow this warning could lead to tire failure and result in death or serious injury. (00015b)

⚠WARNING

Only install original equipment tire valves and valve caps. A valve, or valve and cap combination, that is too long or too heavy can strike adjacent components and damage the valve, causing rapid tire deflation. Rapid tire deflation can cause loss of vehicle control, which could result in death or serious injury. (00281a)

⚠WARNING

Do not exceed the motorcycle's Gross Vehicle Weight Rating (GVWR) or Gross Axle Weight Rating (GAWR). Exceeding these weight ratings can lead to component failure and adversely affect stability, handling and performance, which could result in death or serious injury. (00016f)

- GVWR is the sum of the weight of the motorcycle, accessories and the maximum weight of the rider, passenger and cargo that can be safely carried.
- GAWR is the maximum amount of weight that can be safely carried on each axle.
- The GVWR and GAWR are shown on the information label which is on the frame downtube in some destinations. See Specifications.

⚠WARNING

Do not tow a disabled motorcycle. Towing can adversely affect stability and handling, which could result in death or serious injury. (00017a)

⚠WARNING

Do not pull a trailer with a motorcycle. Pulling a trailer can cause tire overload, damage and

Do not pull a trailer with a motorcycle. Pulling a trailer can cause tire overload, damage and failure, reduced braking performance, and adversely affect stability and handling, which could result in death or serious injury. (00018c)

⚠WARNING

Batteries, battery posts, terminals and related accessories contain lead and lead compounds, and other chemicals known to the State of California to cause cancer, and birth defects or other reproductive harm. Wash hands after handling. (00019e)

⚠WARNING

Do not open storage compartments while riding. Distractions while riding can lead to loss of control, which could result in death or serious injury. (00082a)

⚠WARNING

Consult a Harley-Davidson dealer regarding any questions or problems that occur in the operation of your motorcycle. Failure to do so can aggravate an initial problem, cause costly repairs, cause an accident and could result in death or serious injury. (00020a)

⚠CAUTION

Direct contact of D.O.T. 4 brake fluid with eyes can cause irritation. Avoid eye contact. In case of eye contact flush with large amounts of water and get medical attention. Swallowing large amounts of D.O.T. 4 brake fluid can cause digestive discomfort. If swallowed, obtain medical attention. Use in well ventilated area. KEEP OUT OF REACH OF CHILDREN. (00240a)

- Make sure all equipment required by federal, state and local law is installed and in good operating condition.

Anti-lock Brake System (ABS)

⚠WARNING

If ABS lamp continues flashing at speeds greater than 3 mph (5 km/h) or remains on continuously, the ABS is not operating. The standard brake system is operational, but wheel lock up can occur. Contact a Harley-Davidson Dealer to have ABS repaired. A locked wheel will skid and can cause loss of vehicle control, which could result in death or serious injury. (00361b)

⚠WARNING

ABS cannot prevent lockup of rear wheel due to engine braking. ABS will not aid in cornering or on loose/uneven surfaces. A locked wheel will skid and can cause loss of vehicle control, which could result in death or serious injury. (00362a)

To operate motorcycles equipped with an anti-lock brake system, see Brake System.

Rules of the Road

- Always sound your horn, use your turn signals and exercise caution when passing other vehicles going in the same direction. Never pass going in the same direction at street intersections, on curves or when going up or down a hill.
- At street intersections, give the right-of-way. Do not presume you have the right-of-way, as the other driver may not know that it is your turn.
- Always signal when preparing to stop, turn or pass.
- Promptly obey all traffic signs, including those signs used for the control of traffic at intersections. Always obey traffic signs near schools and at railroad crossings.
- When intending to turn, signal at least 100 ft 30.5 m before reaching the turning point. If turning across an intersection, move over to the centerline of the street (unless local rules require otherwise). Slow down when entering the intersection and turn carefully.
- Never anticipate a traffic light. When a change is indicated from GO to STOP (or STOP to GO), slow down and wait for the light to change. Never run through a yellow or red traffic light.
- While turning either right or left, watch for pedestrians, animals, as well as vehicles.
- Do not leave the curb or parking area without signaling. Make sure that your way is clear to enter moving traffic. A moving line of traffic always has the right-of-way.
- Make sure that your license plate is installed in the position specified by law. Make sure that your license plate is always clearly visible. Keep the license plate clean.
- Ride at a safe speed that is consistent with the type of highway you are on. Pay strict attention to whether the road is dry, oily, icy or wet.
- Watch for debris such as leaves or loose gravel.
- Weather and traffic conditions on the highway dictate adjusting your speed and driving habits accordingly.

Accessories and Cargo

Harley-Davidson Motor Company cannot test and make specific recommendations concerning every accessory or combination of accessories sold. Therefore, the rider must be responsible for safe operation when installing accessories or carrying extra weight.

⚠WARNING

See the Accessories and Cargo section in your owner's manual. Improper cargo loading or accessory installation can cause component failure and adversely affect stability, handling and performance, which could result in death or serious injury. (00021b)

⚠WARNING

Do not exceed the motorcycle's Gross Vehicle Weight Rating (GVWR) or Gross Axle Weight Rating (GAWR). Exceeding these weight ratings can lead to component failure and adversely affect stability, handling and performance, which could result in death or serious injury. (00016f)

- GVWR is the sum of the weight of the motorcycle, accessories and the maximum weight of the rider, passenger and cargo that can be safely carried.
- GAWR is the maximum amount of weight that can be safely carried on each axle.
- The GVWR and GAWR are shown on the information label which is on the frame downtube in some destinations. Refer to weight tables. See Specifications.

⚠WARNING

Do not pull a trailer with a motorcycle. Pulling a trailer can cause tire overload, damage and failure, reduced braking performance, and adversely affect stability and handling, which could result in death or serious injury. (00018c)

Accessories and Cargo Guidelines

Follow the following guidelines when equipping a motorcycle, carrying passengers and/or cargo.

⚠WARNING

Travel at speeds appropriate for road and conditions and never travel faster than posted speed limit. Excessive speed can cause loss of vehicle control, which could result in death or serious injury. (00008a)

- Do not exceed the legal speed limit or drive too fast for existing conditions. Always reduce speed when poor driving conditions exist. High speed increases the influence of any other condition affecting stability and increases the possibility of loss of control.
- Pay strict attention to road surfaces and wind conditions, and always keep both hands on the handlebar grips when riding. Two-wheeled vehicles are subject to upsetting forces such as wind blasts from passing trucks, holes in the pavement, rough road surfaces, rider control error. These forces may influence the handling characteristics of your motorcycle. If you experience these conditions, reduce speed and guide the motorcycle with a relaxed grip to a controlled condition. Do not brake abruptly or force the handlebar. This may aggravate an unstable condition.
- Keep cargo weight concentrated close to the motorcycle and as low as possible. This position minimizes the change in the motorcycle's center of gravity.
- Distribute weight evenly on both sides of the vehicle.
- Do not load bulky items too far behind the rider or add weight to the handlebars or front forks.
- If equipped, do not exceed maximum specified load in each saddlebag.
- If equipped, do not overload luggage racks. Luggage racks are designed for lightweight items.
- Make sure cargo is secure and will not shift while riding and recheck the cargo periodically. Accessories that change the operator's riding position may increase reaction time and affect handling.
- Extra electrical equipment can overload the motorcycle's electrical system. This overload can result in electrical system and/or component failure.

⚠WARNING

Front and/or rear guard(s) can provide limited leg and cosmetic vehicle protection under unique circumstances. (Fall over while stopped, very slow speed slide.) It is not made or intended to provide protection from bodily injury in a collision with another vehicle or any other object. (00022b)

- Large surfaces such as fairings, windshields, backrests and luggage racks can have an adverse effect on stability and handling.
- Install only Genuine Harley-Davidson accessories designed specifically for your motorcycle.
- Pay particular attention to the weights of accessories, cargo, riding gear, passenger and rider. These weights affect the loading requirements of your motorcycle.

⚠WARNING

Harley-Davidson parts and accessories are designed for Harley-Davidson motorcycles. Using non-Harley-Davidson parts or accessories can adversely affect performance, stability or handling, which could result in death or serious injury. (00001b)

⚠WARNING

Do not add sidecar to this motorcycle. Operating motorcycle with sidecar can cause loss of vehicle control, which could result in death or serious injury. (00590d)

Noise Control System

Tampering

Removal or replacement of any noise control system component may be prohibited by law. This prohibition includes modifications made prior to vehicle sale or delivery to the ultimate purchaser. Use of a vehicle on which noise control system components have been removed or rendered inoperative may also be prohibited by law.

Labels

See Labels. The safety and maintenance labels on your motorcycle indicate compliance to market regulations. Refer to Labels.

NOTE:

Some labels are available in different languages for destinations outside the United States.

If removed or damaged, replacement labels can be purchased. See a Harley-Davidson dealer for all available labels.

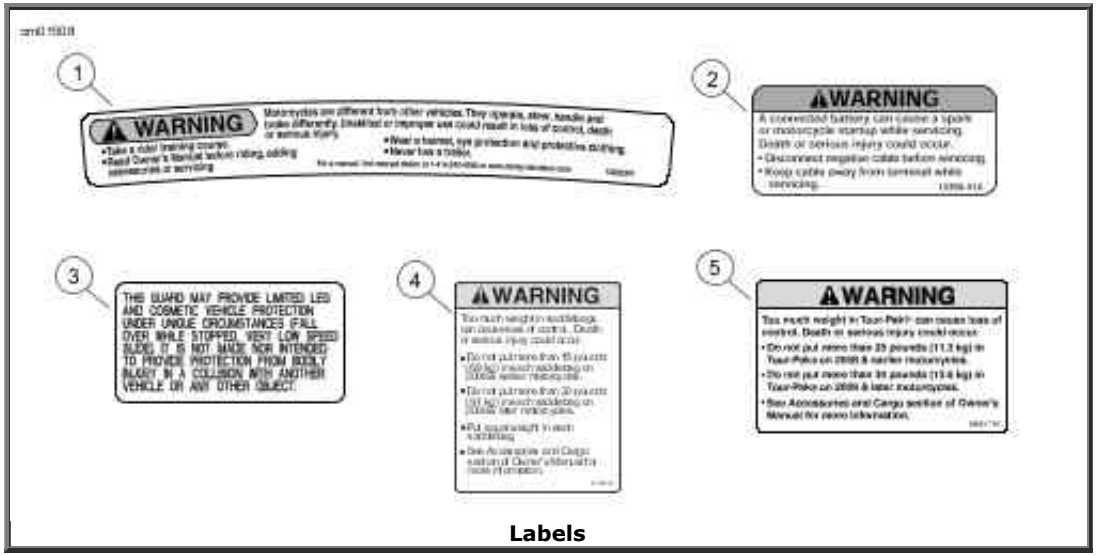

Labels

Labels

ITEM	PART NO.	DESCRIPTION	LOCATION	TEXT
1	14000347	General warnings	Top of air cleaner cover	WARNING: Motorcycles are different from other vehicles. They operate, steer, handle and brake differently. Unskilled or improper use could result in loss of control, death or serious injury. • Take a rider training course. • Read Owner's Manual before riding, adding accessories or servicing. • Wear a helmet, eye protection and protective clothing. • Never tow a trailer. For a manual, find nearest dealer at 1-414-343-4056 or www.harley-davidson.com
2	15368-01A	Battery warning	Under seat, behind fuel tank on main harness trough	WARNING: A connected battery can cause a spark or motorcycle startup while servicing. Death or serious injury could occur. • Disconnect negative cable before servicing. • Keep cable away from terminal while servicing.
3	14148-86	Engine guard label	On front of engine guard below center mount	This guard may provide limited leg and cosmetic vehicle protection under unique circumstances (fall over while stopped, very low speed slide). It is not made nor intended to provide protection from bodily injury in a collision with another vehicle or any other object.
4	90820-93D	Saddlebag load limits	Inside saddlebag	WARNING: Too much weight in saddlebags can cause loss of control. Death or serious injury could occur. • Do not put more than 15 pounds (6.8 kg) in each saddlebag on a 2008 and earlier vehicles. • Do not put more than 20 pounds (9.1 kg) in each saddlebag on 2009 and later vehicles. • Put equal weight in each saddlebag. • See Accessories and Cargo section of Owner's Manual.

5	90821-74C	Tour-Pak load limits	Inside Tour-Pak lid	WARNING: Too much weight in Tour-Pak® can cause loss of control. Death or serious injury could occur. • Do not put more than 25 pounds (11.3 kg) in Tour-Pak® on 2008 and earlier motorcycles. • Do not put more than 30 pounds (13.6 kg) in Tour-Pak® on 2009 and later motorcycles. • See Accessories and Cargo section of Owner's Manual for more information.

Identification

Vehicle Identification Number (VIN)

General

See Typical Harley-Davidson VIN: 2016 Harley-Davidson Touring Models. A unique 17-digit serial or Vehicle Identification Number (VIN) is assigned to each motorcycle. Refer to Harley-Davidson VIN Breakdown: 2016 Touring Models.

Location

See VIN Locations. The full 17-digit VIN is stamped on the right side of the frame near the steering head. In some destinations, a printed VIN label is also attached on the front downtube.

Abbreviated VIN

An abbreviated VIN showing the vehicle model, engine type, model year, and sequential number is stamped on the left side of the crankcase between the engine cylinders.

NOTE:

Always give the full 17-digit Vehicle Identification Number when ordering parts or making any inquiry about your motorcycle.

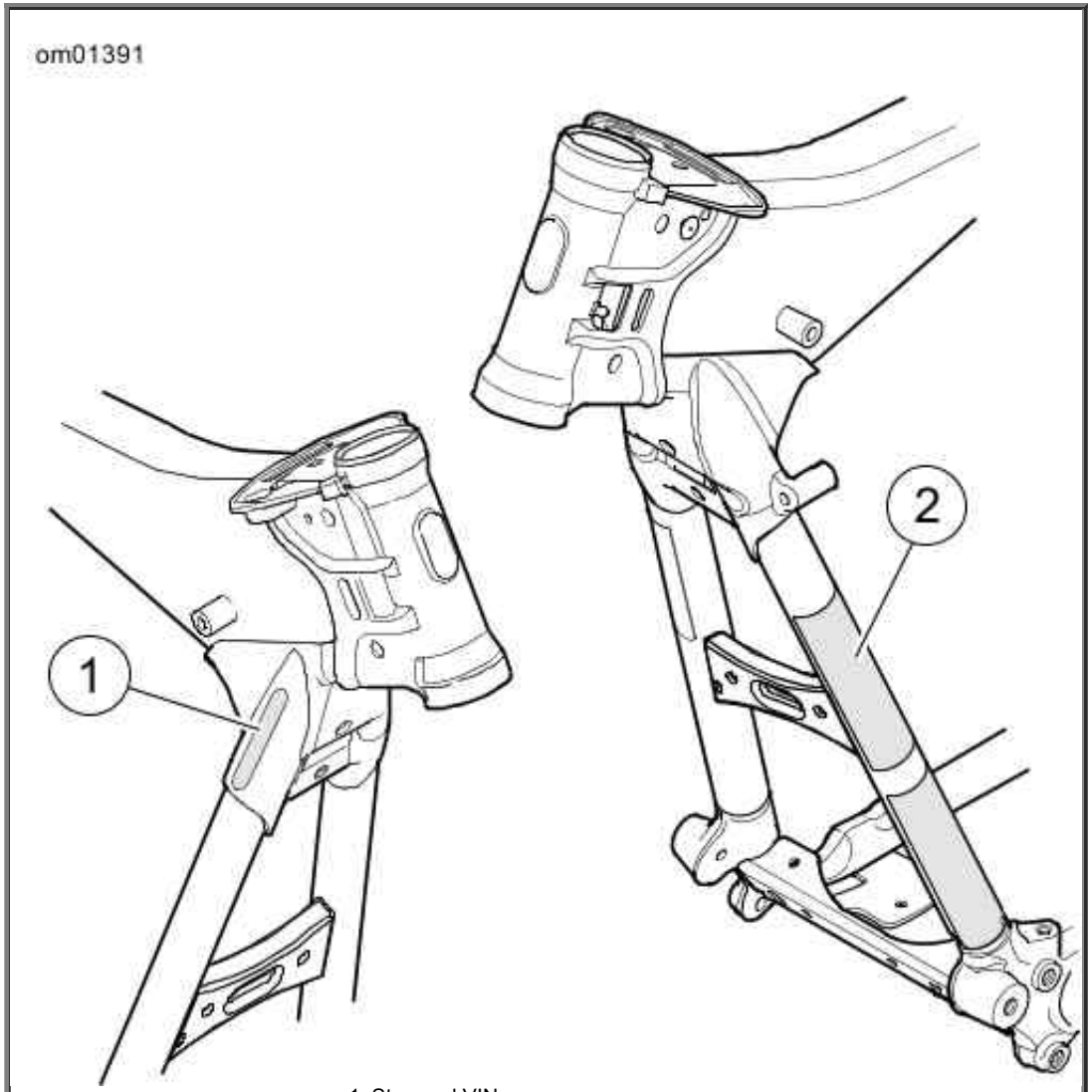

1. Stamped VIN
2. VIN label

VIN Locations

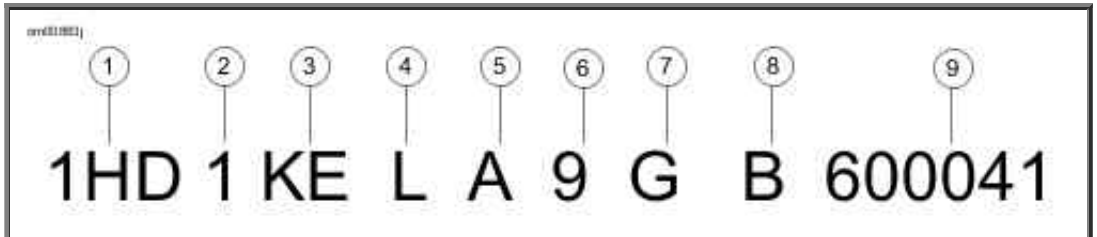

Typical Harley-Davidson VIN: 2016 Harley-Davidson Touring Models

Harley-Davidson VIN Breakdown: 2016 Touring Models

POSITION	DESCRIPTION	POSSIBLE VALUES	
1	World manufacturer identifier	1HD=Originally manufactured in the United States 5HD=Originally manufactured in the United States for sale outside of the United States 932=Originally manufactured in Brazil MEG=Originally manufactured in India	
2	Motorcycle type	1=Heavyweight motorcycle (901 cm^3 or larger)	
3	Model	See VIN model table	
4	Engine type	M=Air-Cooled 1690 cm^3 High Output Twin Cam 103™, fuel-injected L=Twin-Cooled™ 1690 cm^3 High Output Twin Cam 103™, fuel-injected	
5	Calibration/configuration, introduction	**Normal Introduction**	**Mid-year or Special Introduction**
		1=Domestic (DOM)	2, 4=Domestic (DOM)
		3=California (CAL)	5, 6=California (CAL)
		A=Canada (CAN)	B=Canada (CAN)
		C=HDI	D=HDI
		E=Japan (JPN)	F=Japan (JPN)
		G=Australia (AUS)	H=Australia (AUS)
		J=Brazil (BRZ)	K=Brazil (BRZ)
		L=Asia Pacific (APC)	M=Asia Pacific (APC)
		N=India (IND)	P=India (IND)
6	VIN check digit	Can be 0-9 or X	
7	Model year	G=2016	
8	Assembly plant	B=York, PA U.S.A. D=H-D Brazil-Manaus, Brazil (CKD) N=Haryana India (Bawal District Rewari)	
9	Sequential number	Varies	

VIN Model Codes: 2016 Touring Models

CODE	MODEL	CODE	MODEL
FB	FLHR Road King®	KG	FLTRU Road Glide® Ultra
FC	FLHTCU Electra Glide® Ultra Classic®	KH	FLTRX Road Glide®
FR	FLHRC Road King® Classic	KK	FLHTKL Ultra Limited Low
KB	FLHX Street Glide®	KN	FLHTK Ultra Limited Shrine
KD	FLHTCUL Electra Glide® Ultra Classic® Low	KR	FLHXS Street Glide® Special
KE	FLHTK Ultra Limited	KS	FLHTCU TC Electra Glide® Ultra Classic® (Twin-Cooled™)
KF	FLHTCUL TC Electra Glide® Ultra Classic® Low (Twin-Cooled™)	KT	FLTRXS Road Glide® Special

Specifications

Specifications

Engine: Air-Cooled High Output Twin Cam 103

ITEM	SPECIFICATION	
Number of cylinders	2	
Type	4-cycle, 45 degree V-Type, air-cooled	
Compression ratio	9.7:1	
Bore	3.875 in	98.42 mm
Stroke	4.374 in	111.1 mm
Displacement	103.1 in^3	1690 cm^3
Lubrication system	Pressurized, dry sump with oil cooler	

Engine: Twin-Cooled High Output Twin Cam 103

ITEM	SPECIFICATION

Number of cylinders	2	
Type	4-cycle, 45 degree V-Type, Twin-Cooled	
Compression ratio	10.0:1	
Bore	3.875 in	98.42 mm
Stroke	4.374 in	111.1 mm
Displacement	103.1 in^3	1690 cm^3
Lubrication system	Pressurized, dry sump	
Cooling system	Liquid-cooled cylinder heads with lower fairing-mounted radiators, electric pump and thermostat	

NOTE:

Specifications in this publication may not match those of official certification in some markets due to timing of publication printing, variance in testing methods, and/or vehicle differences. Customers seeking officially recognized regulatory specifications for their vehicle should refer to certification documents and/or contact their respective dealer or distributor.

Transmission

TRANSMISSION	SPECIFICATION
Type	Constant mesh, foot shift
Speeds	6 forward

Electrical

COMPONENT	SPECIFICATION	
Ignition timing	Not adjustable	
Battery	12 V, 28 Ah, 405 CCA sealed and maintenance free	
Charging system	Three-phase, 50 A (585 W @ 13 V, 2000 rpm, 650 W max power @13 V)	
Spark plug size	12 mm	
Spark plug gap	0.038-0.043 in	0.97-1.09 mm
Spark plug torque	12-18 ft-lbs	16.3-24.4 Nm

Sprocket Teeth

DRIVE	ITEM	NUMBER OF TEETH
Primary	Engine	34
	Clutch	46
Final	Transmission	32
	Rear wheel	68

Overall Drive Ratios

GEAR	RATIO
First	9.593
Second	6.650
Third	4.938
Fourth	4.000
Fifth	3.407
Sixth	2.875

Capacities

ITEM	U.S.	L
Fuel tank (total)	6.0 gal	22.7
Low fuel warning light on (approximate)	1.0 gal	3.8
Engine oil with filter * (approximate)	4.0 qt	3.8
Transmission ** (approximate)	1.00 qt	0.95
Primary chaincase (dry fill; approximate)	38 oz	1.1
Coolant, Twin-Cooled models (approximate)	1.1 qt	1.0

* When refilling, initially add 3.0 qt 2.84 L . Add more as needed to bring level within specification.

** When refilling, initially add 28 oz 0.83 L . Add more as needed to bring level within specification.

WARNING

Do not exceed the motorcycle's Gross Vehicle Weight Rating (GVWR) or Gross Axle Weight Rating (GAWR). Exceeding these weight ratings can lead to component failure and adversely affect stability, handling and performance, which could result in death or serious injury. (00016f)

- GVWR is the sum of the weight of the motorcycle, accessories, and the maximum weight of the rider, passenger and cargo that can be safely carried.
- GAWR is the maximum amount of weight that can be safely carried on each axle.
- The GVWR and GAWR are shown on the information label, located on the frame down tube in some destinations.

NOTE:

The maximum additional weight allowed on the motorcycle equals the Gross Vehicle Weight Rating (GVWR) minus the running weight. For example, a motorcycle with GVWR of 1200 lb 544 kg having a running weight of 800 lb 363 kg , would allow a maximum of an additional 400 lb 181 kg combined weight of the rider, passenger, riding gear, cargo and installed accessories.

Weights: FLHTCU, FLHTCUL, FLHTCU TC, FLHTCUL TC, FLHTK, FLHTKL, FLTRU

ITEM	FLHTCU FLHTCUL		FLHTCU TC FLHTCUL TC		FLHTK FLHTKL		FLTRU	
	lb	kg	lb	kg	lb	kg	lb	kg
Running weight*	879	399	879	399	896	406	916	415
Maximum added weight allowed**	481	218	481	218	464	211	444	201
GVWR	1360	617	1360	617	1360	617	1360	617
GAWR front	500	227	500	227	500	227	500	227
GAWR rear	927	420	927	420	927	420	927	420

* The total weight of the motorcycle as delivered with all oil/fluids and approximately 90% of fuel.

** The total weight of accessories, cargo, riding gear, passenger and rider must not exceed this weight.

Weights: FLHR, FLHRC, FLHX, FLHXS, FLTRX, FLTRXS

ITEM	FLHR		FLHRC		FLHX FLHXS		FLTRX FLTRXS	
	lb	kg	lb	kg	lb	kg	lb	kg
Running weight*	814	369	818	371	810	367	849	385

Maximum added weight allowed**	546	248	542	246	550	250	511	232
GVWR	1360	617	1360	617	1360	617	1360	617
GAWR front	500	227	500	227	500	227	500	227
GAWR rear	927	420	927	420	927	420	927	420

* The total weight of the motorcycle as delivered with all oil/fluids and approximately 90% of fuel.

** The total weight of accessories, cargo, riding gear, passenger and rider must not exceed this weight.

Dimensions: FLHTCU, FLHTCUL, FLHTCU TC, FLHTCUL TC, FLHTK, FLHTKL, FLTRU

ITEM	FLHTCU FLHTCU TC FLHTK		FLHTCUL FLHTCUL TC FLHTKL		FLTRU	
	in	mm	in	mm	in	mm
Length	102.4	2600	102.4	2600	102.2	2595
Overall Width	37.8	960	37.8	960	42.2	1070
Overall height	56.7	1440	54.7	1390	55.4	1420
Wheel base	64.0	1625	64.0	1625	64.0	1625
Road clearance	5.3	135	4.6	115	4.7	120
Seat height*	27.3	695	25.6	652	28.4	699

*With 180 lb 81.7 kg rider on seat

Dimensions: FLHR, FLHRC, FLHX, FLHXS, FLTRX, FLTRXS

ITEM	FLHR FLHRC		FLHX FLHXS		FLTRX FLTRXS	
	in	mm	in	mm	in	mm
Length	96.5	2450	96.5	2450	95.6	2428
Overall width	37.8	960	37.8	960	38.5	978
Overall height	56.3	1430	53.2	1350	52.3	1328
Wheelbase	64.0	1625	64.0	1625	64.0	1625
Road clearance	5.3	135	5.3	135	5.3	135
Seat height*	26.7	678	26.1	663	26.1	663

*With 180 lb 81.7 kg rider on seat

Specified Tires

MODEL	MOUNT	SIZE	SPECIFIED TIRE	PRESSURE (COLD)	
				psi	kPa
FLHTCU, FLHTCUL, FLHTCU TC, FLHTCUL TC, FLHTK, FLHTKL, FLTRU, FLHR (cast)	front	17 in	Dunlop D408F 130/80B17 65H	36	248
FLHR, FLHRC (laced)	front	16 in	Dunlop D402F MT90B16 M/C 72H (wide whitewall)	36	248
FLHX, FLHXS, FLTRX, FLTRXS	front	19 in	Dunlop D408F 130/60B19 61H	36	248
All with cast wheels	rear	16 in	Dunlop D407T 180/65B16 81H	40	276
FLHR, FLHRC (laced)	rear	16 in	Dunlop D407 180/65B16 81H (wide whitewall)	40	276

Tire Data

⚠WARNING

Match tires, tubes, rim strips or seals, air valves and caps to the correct wheel. Contact a Harley-Davidson dealer. Mismatching can lead to tire damage, allow tire slippage on the wheel or cause tire failure, which could result in death or serious injury. (00023c)

⚠WARNING

Only install original equipment tire valves and valve caps. A valve, or valve and cap combination, that is too long or too heavy can strike adjacent components and damage the valve, causing rapid tire deflation. Rapid tire deflation can cause loss of vehicle control, which could result in death or serious injury. (00281a)

⚠WARNING

Use only Harley-Davidson specified tires. See a Harley-Davidson dealer. Using non-specified tires can adversely affect stability, handling or braking, which could result in death or serious injury. (00024b)

Refer to Specified Tires for specified tires and recommended pressures.

Tubeless tires fitted with the correct size inner tubes may be used on Harley-Davidson laced (wire spoked) wheels. Install a **new** rim strip and correct size inner tube each time a new tire is installed on a laced wheel.

⚠WARNING

Harley-Davidson front and rear tires are not the same. Interchanging front and rear tires can cause tire failure, which could result in death or serious injury. (00026a)

⚠WARNING

Be sure tires are properly inflated, balanced, undamaged, and have adequate tread. Inspect your tires regularly and see a Harley-Davidson dealer for replacements. Riding with excessively worn, unbalanced, improperly inflated, overloaded or damaged tires can lead to tire failure and adversely affect stability and handling, which could result in death or serious injury. (00014b)

Always maintain proper tire pressure as specified in Specified Tires. Do not load tires beyond GAWR specified in Weights: FLHTCU, FLHTCUL, FLHTCU TC, FLHTCUL TC, FLHTK, FLHTKL, FLTRU. Under-inflated, over-inflated or overloaded tires can fail.

⚠WARNING

Replace tire immediately with a Harley-Davidson specified tire when wear bars become visible or only 1/32 in (0.8 mm) tread depth remains. Riding with a worn tire could result in death or serious injury. (00090c)

⚠WARNING

Do not use liquid tire balancers or sealants in aluminum wheels. Using liquid tire balancers or sealants can cause rapid corrosion of the rim surface, which could cause tire deflation. Tire deflation can cause loss of vehicle control, which could result in death or serious injury. (00631b)

Harley-Davidson tires have wear bars that run horizontally across the tread. When a tire is worn to the point that the wear bars are visible, or 1/32 in 0.8 mm tread depth remains, the tire can:

- Be more easily damaged leading to tire failure.
- Provide reduced traction.
- Adversely affect stability and handling.

Harley-Davidson does not perform any testing with only nitrogen in tires. Harley-Davidson neither recommends nor discourages the use of pure nitrogen to inflate tires.

India Tire Compliance Statement: Harley-Davidson Motor Company declares that the tires listed in the specifications section (India Only) meet the Indian Standard 15627 requirement of the Bureau of Indian Standards (as amended from time to time) required for registration of vehicles assembled/manufactured in India. These tires also comply with the Central Motor Vehicle Rules requirements, 1989.

Fuel

Always use a good quality unleaded gasoline. Octane ratings are usually found on the pump. Refer to Octane Ratings.

⚠WARNING

Avoid spills. Slowly remove filler cap. Do not fill above bottom of filler neck insert, leaving air space for fuel expansion. Secure filler cap after refueling. Gasoline is extremely flammable and highly explosive, which could result in death or serious injury. (00028a)

⚠WARNING

Use care when refueling. Pressurized air in fuel tank can force gasoline to escape through filler tube. Gasoline is extremely flammable and highly explosive, which could result in death or serious injury. (00029a)

Modern service station pumps dispense a high flow of gasoline into a motorcycle fuel tank. This can cause air entrapment and pressurization.

Octane Ratings

SPECIFICATION	RATING
Pump Octane (R+M)/2	91 (95 RON)

Gasoline Blends

Your motorcycle was designed to get the best performance and efficiency using unleaded gasoline. Most gasoline is blended with alcohol and/or ether to create oxygenated blends. The type and amount of alcohol or ether added to the fuel is important.

CAUTION

Do not use gasoline that contains methanol. Doing so can result in fuel system component failure, engine damage and/or equipment malfunction. (00148a)

- Gasoline/METHYL TERTIARY BUTYL ETHER (MTBE) blends are a mixture of gasoline and as much as 15 percent MTBE. Gasoline/MTBE blends use in your motorcycle is approved.
- ETHANOL fuel is a mixture of ethanol (grain alcohol) and unleaded gasoline and can have an impact on fuel mileage. Fuels with an ethanol content of up to 10 percent may be used in your motorcycle without affecting vehicle performance. U.S. EPA regulations currently indicate that fuels with 15 percent ethanol (E15) are restricted from use in motorcycles at the time of this publication. Some motorcycles are calibrated to operate with higher ethanol concentrations to meet the fuel standards in certain countries.
- REFORMULATED OR OXYGENATED GASOLINES (RFG) describes gasoline blends that are specifically designed to burn cleaner than other types of gasoline. This results in fewer tailpipe emissions. They are also formulated to evaporate less when filling the tank. Reformulated gasolines use additives to oxygenate the gas. Your motorcycle will run normally using this type of fuel. Harley-Davidson recommends using it whenever possible as an aid to cleaner air in our environment.
- Do not use racing fuel or fuel containing methanol. Use of these fuels will damage the fuel system.
- Using fuel additives other than those approved for use by Harley-Davidson may damage the engine, fuel system and other components.

Some gasoline blends might adversely affect starting, driveability or fuel efficiency. If any of these problems are experienced, try a different brand of gasoline or gasoline with a higher octane blend.

Catalytic Converter

The motorcycle has a catalytic converter in the exhaust pipe collector.

CAUTION

Do not operate catalytic converter-equipped vehicle with engine misfire. If you operate the vehicle under this condition, the exhaust will become abnormally hot, which can cause vehicle damage, including emission control loss. (00149c)

CAUTION

Use only unleaded fuel in catalytic converter-equipped motorcycles. Using leaded fuel will damage the emission control system. (00150b)

Controls and Indicators

General: Controls and Indicators

⚠WARNING

Read the CONTROLS AND INDICATORS section before riding your motorcycle. Failure to understand the operation of the motorcycle could result in death or serious injury. (00043a)

Some features explained are unique to certain models. These features may be available as accessories for your Harley-Davidson motorcycle. See a Harley-Davidson dealer for a complete list of accessories that will fit your specific motorcycle.

Ignition Switch

⚠WARNING

The automatic-on headlamp feature provides increased visibility of the rider to other motorists. Be sure headlamp is on at all times. Poor visibility of rider to other motorists can result in death or serious injury. (00030b)

See YOUR OWNER'S MANUAL section. Be sure to record all your key numbers in the space provided at the front of this book.

See Ignition Switch. The ignition switch controls electrical functions of the motorcycle.

⚠WARNING

Do not operate vehicle with forks locked. Locking the forks restricts the vehicle's turning ability, which could result in death or serious injury. (00035a)

CAUTION

Protect your vehicle against theft. Failure to lock the motorcycle after parking could result in theft and/or equipment damage. (00151b)

CAUTION

Do not lubricate barrel locks with petroleum based lubricants or graphite. Inoperative locks may result. (00152a)

NOTES:

- *Harley-Davidson recommends removing key from ignition/fork lock before operating motorcycle. If you do not remove key, it can fall out during operation.*
- *ACCESSORY - Accessories and hazard warning flasher can be turned on. Instrument lamps are on. Brake lamp and horn can be activated. Key may be removed.*
- *The lamps illuminate when the switch is in the IGNITION position, as required by law in some localities.*

Ignition Switch Positions

MODEL	FUNCTION	LABEL	OPERATION
FLHR FLHRC	Switch*	OFF	Ignition, lamps and accessories are off.
		ACCESSORY	Accessories are on. Hazard warning flashers can be left on. Instrument lamps are on. Brake lamp and horn can be activated.*
		IGNITION	Ignition, lamps and accessories are on.**
FLHTCU FLHTCU TC FLHTCUL	Key Lock	LOCK	Locks the switch in either the FORK LOCK or ACCESSORY position. Remove the key for security.
		UNLOCK	Unlocks the switch. Unlocked, the switch can be rotated to any of the 4 positions. To prevent loss when riding, remove the key.
FLHTK FLHTKL FLHX FLHXS	Switch	FORK LOCK	Locks fork in left position to discourage unauthorized use of vehicle when parked. See Fork Lock for operation.
		OFF	When switch is in OFF position, the ignition, lamps and accessories are off.
		IGNITION	When the switch is in the IGNITION position, the motorcycle can be started and all lamps and accessories will operate.

FLTRU FLTRX FLTRXS		ACCESSORY	In ACCESSORY, the instrument lamps and accessories operate but the engine can not be started. Brake lamp and horn can be activated. The 4-way hazard flashers operate. The switch can be locked in ACCESSORY.

* Switch lock is under the switch cover. Insert key and turn key counterclockwise to lock, clockwise to unlock. Key may be removed in any position.

** International models: Position lamp and tail lamp are also on.

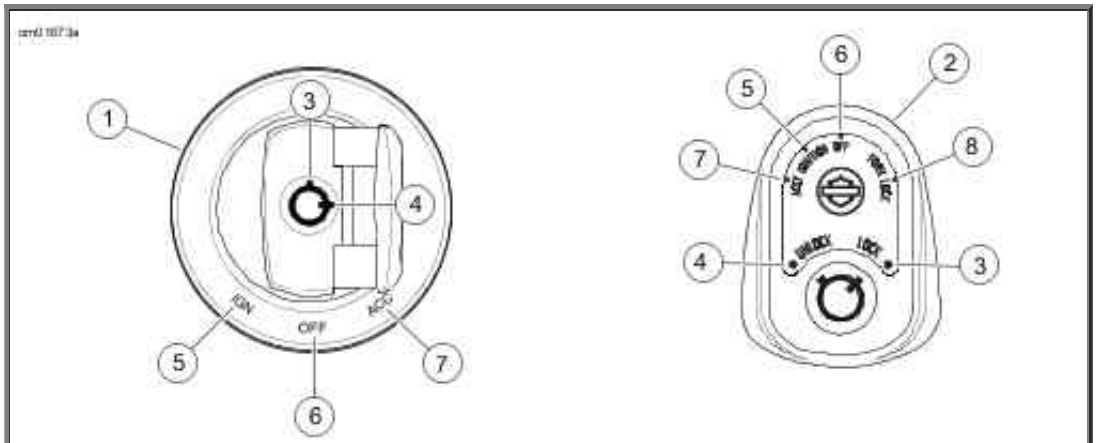

1. Ignition switch: FLHR, FLHRC
2. Ignition switch: other models
3. Lock
4. Unlock
5. Ignition
6. Off
7. Accessory
8. Fork lock

Ignition Switch

Fork Lock

CAUTION

Protect your vehicle against theft. Failure to lock the motorcycle after parking could result in theft and/or equipment damage. (00151b)

Using the fork lock immediately after parking your motorcycle will discourage unauthorized use or theft.

FLHR, FLHRC: See Fork Lock: FLHR, FLHRC. The fork lock is at the top of the steering head, behind the headlamp nacelle and inset in the handlebar clamp shroud.

Other models: See Ignition Switch. The fork lock is integrated into the ignition switch.

NOTE:

Do not force the switch into the locked position or switch damage can occur.

⚠WARNING

Do not operate vehicle with forks locked. Locking the forks restricts the vehicle's turning ability, which could result in death or serious injury. (00035a)

To Lock Fork: FLHR, FLHRC

1. Turn fork to full left position.
2. See Fork Lock: FLHR, FLHRC. Insert key and turn key counterclockwise to LOCK position. Remove key.
3. To unlock fork, insert key and turn clockwise to UNLOCK position. Remove key.

To Lock Fork: Other Models

1. Turn fork to full left position.
2. See Ignition Switch. Turn switch knob to FORK LOCK. Push knob down.
3. Insert key and turn key to LOCK position. Remove key.
4. To unlock fork, insert key and turn to UNLOCK position. Remove key. Rotate switch knob out from the FORK LOCK position.

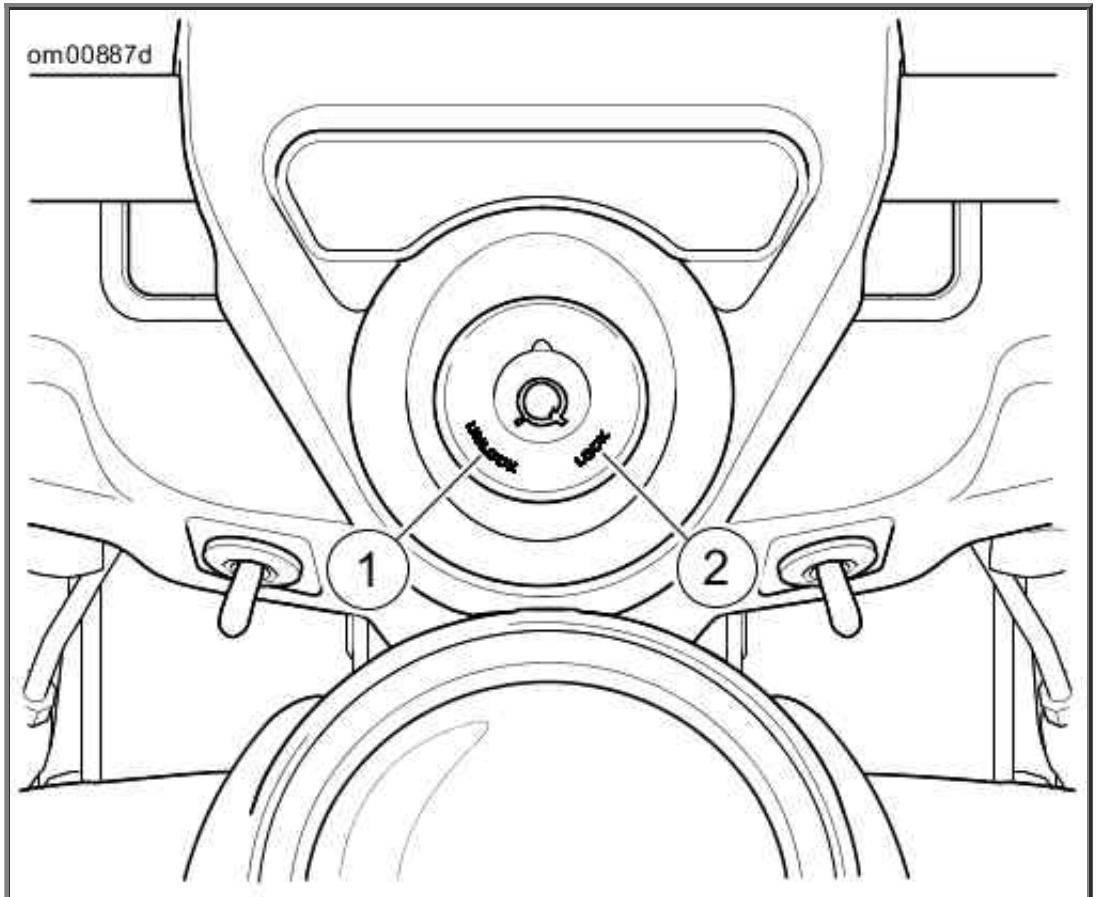

1. Unlock
2. Lock

Fork Lock: FLHR, FLHRC

Instruments

Speedometer

WARNING

Travel at speeds appropriate for road and conditions and never travel faster than posted speed limit. Excessive speed can cause loss of vehicle control, which could result in death or

serious injury. (00008a)

Models except FLHR, FLHRC: See Instruments: Models Except FLHR, FLHRC.

FLHR, FLHRC: See Instruments: FLHR, FLHRC. The speedometer registers forward speed in miles per hour (U.S.) or kilometers per hour (international).

Instrument backlighting activates after a slight delay. Changes to ambient lighting, such as going through a tunnel, may briefly change backlighting.

Tachometer

CAUTION

See OPERATING RECOMMENDATIONS section. Do not operate the engine above maximum safe RPM as shown under OPERATION (red zone on tachometer). Lower the RPM by upshifting to a higher gear or reducing the amount of throttle. Failure to lower RPM may cause equipment damage. (00159a)

Models except FLHR, FLHRC: See Instruments: Models Except FLHR, FLHRC. The tachometer measures the engine speed in revolutions per minute (rpm x 100).

FLHR, FLHRC: See Instruments: FLHR, FLHRC. A digital tachometer is displayed in the odometer window.

Fuel Gauge

The fuel gauge indicates the approximate amount of fuel in the fuel tank.

FLHR, FLHRC: The fuel gauge is on the left side of the fuel tank. See Fuel Filler Cap.

Models except FLHR, FLHRC: See Instruments: Models Except FLHR, FLHRC. The fuel gauge is on the instrument panel.

Voltmeter

Models except FLHR, FLHRC: See Instruments: Models Except FLHR, FLHRC. The voltmeter indicates the measured electrical system voltage. With the engine running above 1500 rpm, the voltmeter should register 13.0-14.5 volts with battery at full charge.

Vehicle Information: Models except FLHR, FLHRC

More information can be displayed within the infotainment system by pressing the vehicle information switch. See Hand Controls.

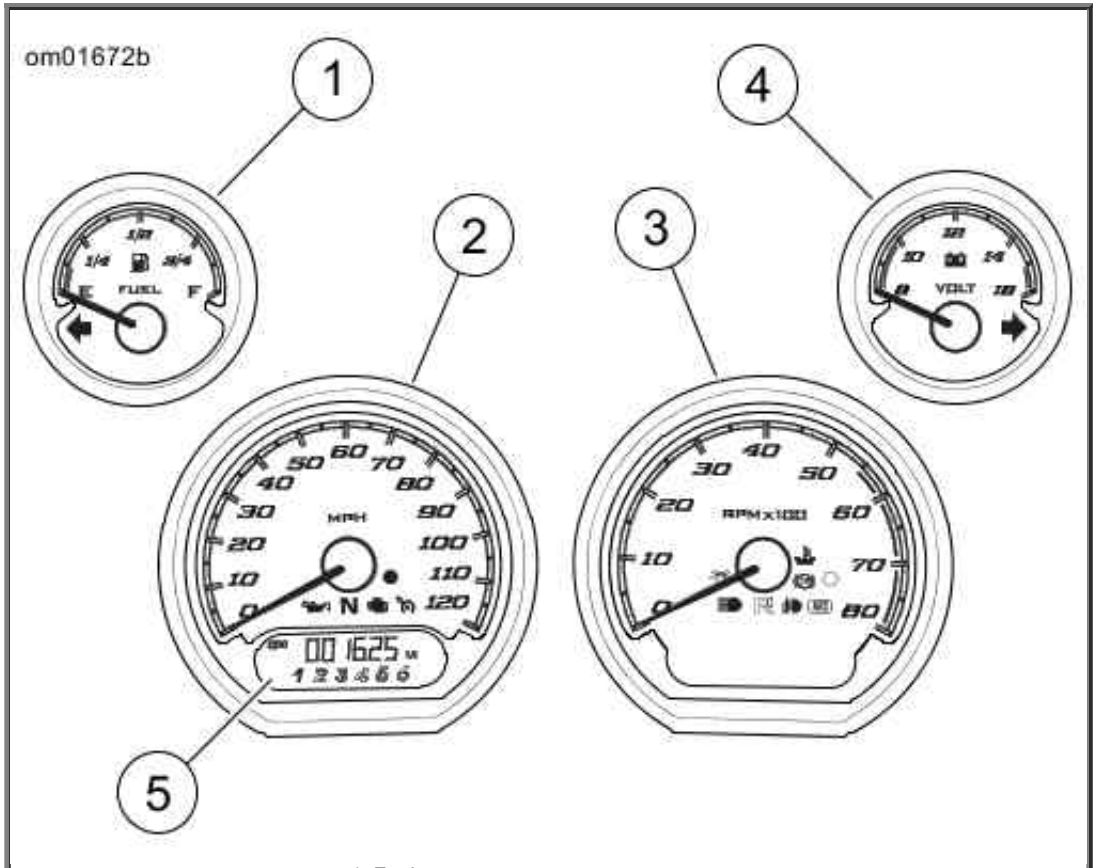

1. Fuel
2. Speedometer
3. Tachometer
4. Voltmeter
5. Odometer window

Instruments: Models Except FLHR, FLHRC

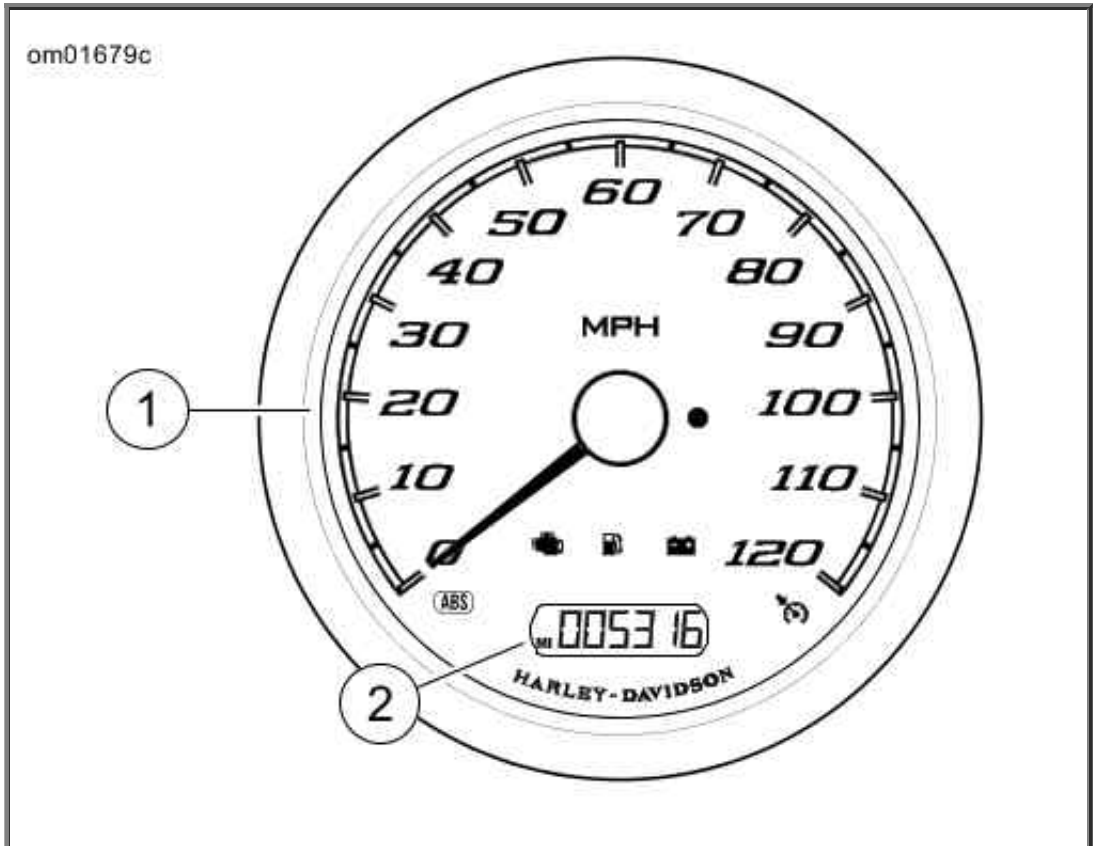

1. Speedometer
2. Odometer window

Instruments: FLHR, FLHRC

Indicator Lamps

Check Engine Lamp

See Indicator Lamps: Models Except FLHR, FLHRC and Indicator Lamps: FLHR, FLHRC. The check engine lamp indicates the condition of the engine/engine management system.

The check engine lamp normally comes on when the ignition is first turned on and remains on for approximately 4 seconds. During this time, the engine management system runs a series of self-diagnostics.

If the engine lamp comes on at any other time, see a Harley-Davidson dealer.

Low Fuel Lamp

Solid: See Indicator Lamps: Models Except FLHR, FLHRC and Indicator Lamps: FLHR, FLHRC. The low fuel warning lamp indicates when the gasoline in the tank reaches the low fuel level (approximate). Refer to Capacities for the low fuel level. See Odometer Functions for fuel range features.

Flashing: If the low fuel lamp flashes continuously or remains on after filling the fuel tank, see a Harley-Davidson dealer.

Battery Discharge Lamp

See Indicator Lamps: Models Except FLHR, FLHRC and Indicator Lamps: FLHR, FLHRC. The battery discharge lamp indicates overcharging or undercharging of the battery. Refer to Battery Maintenance.

Security Lamp

See Indicator Lamps: Models Except FLHR, FLHRC and Indicator Lamps: FLHR, FLHRC. The security lamp displays the status of the security system and electrical self-diagnostics for the motorcycle. Refer to Security System for security system operation.

Flashing: The security system is armed.

Solid (security system armed): The alarm has been activated.

Solid (security system disarmed): If the lamp remains on, see a Harley-Davidson dealer.

Turn Signal Indicator Lamps

Flashing: A turn signal is activated. When the 4-way hazard flashers are operating, both turn indicators flash simultaneously.

Rapid flashing: A turn signal bulb is not operating. Exercise caution and use hand signals. Replace inoperative components at earliest opportunity.

Headlamp High Beam Lamp

See Indicator Lamps: Models Except FLHR, FLHRC and Indicator Lamps: FLHR, FLHRC. The headlamp high beam lamp is on when the high beam or flash to pass switch is activated.

Neutral Lamp

See Indicator Lamps: Models Except FLHR, FLHRC and Indicator Lamps: FLHR, FLHRC. The neutral lamp is on when the transmission is in neutral.

Cruise Control Lamp

Off: Cruise control is not enabled.

Orange: Cruise control is enabled. Cruising speed is not set or has been disengaged.

Green: Cruising speed is set. Motorcycle speed is maintained by the cruise control system.

Auxiliary/Fog Lamp Indicator Lamp

The auxiliary/fog lamp indicator is on when the auxiliary/fog lamps are turned on (for equipped models).

Gear Indicator

See Indicator Lamps: Models Except FLHR, FLHRC. On equipped models, the currently selected gear (1-6) is displayed in the odometer window. The gear indicator is calculated from the vehicle speed and engine speed. The gear indicator remains blank when the transmission is in neutral, the clutch lever is pulled in or the vehicle is not moving.

The gear indicator is momentarily inaccurate depending on rider clutch use characteristics and clutch wear. This condition can occur if the clutch is allowed to slip either due to excessive wear, misadjusted clutch or if the operator rides the clutch.

ABS Lamp

⚠WARNING

If ABS lamp continues flashing at speeds greater than 3 mph (5 km/h) or remains on continuously, the ABS is not operating. The standard brake system is operational, but wheel lock up can occur. Contact a Harley-Davidson Dealer to have ABS repaired. A locked wheel will skid and can cause loss of vehicle control, which could result in death or serious injury. (00361b)

Flashing: See Indicator Lamps: Models Except FLHR, FLHRC and Indicator Lamps: FLHR, FLHRC. On vehicles with ABS, the ABS lamp begins flashing when the vehicle is turned on. The flashing lamp indicates that the system is in self-diagnosis mode. It continues to flash until motorcycle speed exceeds 3 mph 5 km/h . ABS is not operational until the lamp turns off.

Solid: Continuous illumination of the lamp indicates an ABS malfunction. The ABS is disabled and the brakes are operating as if they were non-ABS brakes. See a Harley-Davidson dealer for service.

Engine Coolant Temperature Lamp

⚠WARNING

Do not loosen or remove pressure cap when engine is hot. The cooling system is under pressure and hot coolant and steam can escape from pressure cap, which could cause severe burns. Allow engine to cool before servicing the cooling system. (00091b)

CAUTION

If the engine coolant temperature indicator lamp remains lit, always check the coolant level. If the coolant level is normal and the lamp is still lit, stop the engine at once and do not ride further until the trouble is located and the necessary repairs are made. Failure to do so may result in engine damage. (00158a)

See Indicator Lamps: Models Except FLHR, FLHRC. On Twin-Cooled vehicles, the engine coolant temperature lamp is on when the coolant has exceeded threshold temperature.

Check and add coolant as necessary. See Cooling System. For other possible coolant system issues, see Cooling System: Twin-Cooled Models.

If coolant level is sufficient and the lamp remains on, stop the engine immediately. See a Harley-Davidson dealer for service.

Oil Pressure Lamp

CAUTION

If the oil pressure indicator lamp remains lit, always check the oil supply first. If the oil supply is normal and the lamp is still lit, stop the engine at once and do not ride further until the trouble is located and the necessary repairs are made. Failure to do so may result in engine damage. (00157a)

See Indicator Lamps: Models Except FLHR, FLHRC and Indicator Lamps: FLHR, FLHRC. The oil pressure lamp turns on when the ignition is turned on. The lamp remains on until the engine is started.

If the lamp is on while the engine is running, sufficient oil is not circulating through the engine.

Check and add engine oil as necessary. See Engine Oil Level. For other possible causes, see Engine.

If the engine oil level is sufficient and the lamp remains on, stop the engine immediately. See a Harley-Davidson dealer for service.

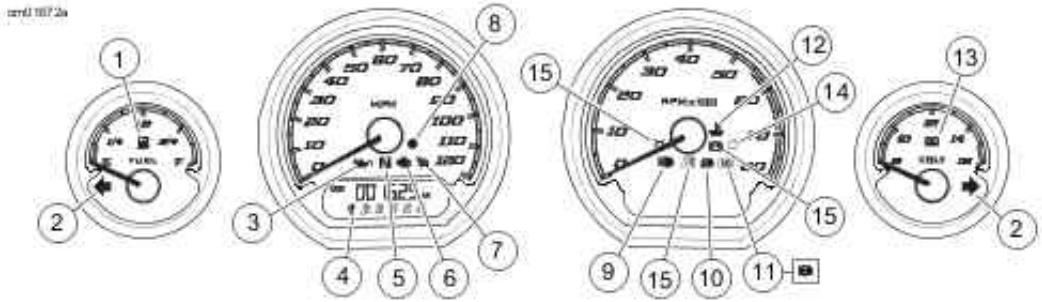

1. Low fuel
2. Turn signal indicator
3. Oil pressure
4. Gear indicator
5. Neutral
6. Check engine
7. Cruise control
8. Security
9. Headlamp high beam
10. Auxiliary/fog lamp indicator
11. ABS (km/h ABS icon also shown)
12. Engine coolant temperature
13. Battery discharge
14. Light sensor (not an indicator)
15. Not used

Indicator Lamps: Models Except FLHR, FLHRC

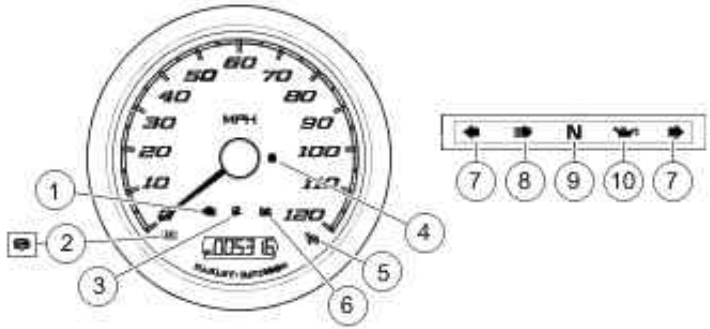

1. Check engine
2. ABS (km/h ABS icon lamp also shown)
3. Low fuel
4. Security
5. Cruise control
6. Battery discharge
7. Turn signal indicator
8. High beam
9. Neutral
10. Oil pressure

Indicator Lamps: FLHR, FLHRC

Odometer Functions

CAUTION

Never attempt to tamper with or alter the vehicle odometer. This is illegal. Tampering with or altering a vehicle odometer may cause equipment damage. (00160a)

Odometer

The odometer shows the total accumulated mileage for the motorcycle. Press the trigger switch to cycle through different odometer functions. The time (FLHR, FLHRC) and odometer can be displayed while the motorcycle is turned off by pressing the trigger switch.

Changing units (FLHR, FLHRC): With odometer displayed, press and hold the trigger switch until the units change to MI or KM. All odometer functions will display the selected units.

Changing units (other models): Use the setup function in the radio, change the unit setting to ENGLISH or METRIC. See BOOM! BOX OWNER'S MANUAL.

Trip Odometers

The two trip odometers (A and B) display the total accumulated mileage since they were last reset. To check, press and release the trigger switch until the desired trip odometer (A or B) is displayed.

Reset: With the desired trip odometer displayed (A or B), press and hold the trigger switch until the selected trip odometer resets to zero.

Fuel Range

The fuel range display shows the approximate mileage available with the amount of fuel left in the fuel tank. The range display is only updated when the vehicle is moving.

Display Fuel Range: With the ignition switch in the ACCESSORY or IGNITION position, press the trigger switch until fuel range is displayed. The fuel range is indicated by the letter "R" in the left side of the display. The calculated remaining distance (miles or kilometers) to empty is displayed, based on the amount of fuel in the tank.

Low Fuel: Refer to Capacities. The fuel range is automatically displayed in the odometer window when the low fuel lamp is on. When fuel range drops to 10 miles or 10 kilometers remaining, the odometer window displays "LO RNG" to indicate that the motorcycle is nearly out of fuel. Refuel as soon as possible.

Turn Off Automatic Low Fuel Popup: With the fuel range displayed, hold the trigger switch until the fuel range flashes two times. To turn this feature back on, hold the trigger switch until the fuel range flashes once.

Reset: Resetting the low fuel warning lamp and fuel range requires sufficient fuel in the tank and an ignition cycle change (IGNITION-OFF-IGNITION).

Adding at least 2 gal 7.5 L of fuel allows the fuel range to update. The fuel range slowly updates over the next 30 miles 50 kilometers after refueling.

Battery Reconnection and Initialization: If the battery is disconnected and reconnected, the gauge requires approximately a half tank of fuel to initialize

fuel range functionality.

Digital Tachometer: FLHR, FLHRC

Press and release the trigger switch until the digital tachometer is displayed. The odometer window briefly displays a "GEAR/RPM" message, then displays the current gear and engine speed (revolutions per minute).

Time: FLHR, FLHRC

See Setting Time: FLHR, FLHRC. On FLHR, FLHRC models, the time is displayed in the odometer window. Perform the following steps to configure time.

1. Turn the ignition switch to ACCESSORY or IGNITION.
2. Repeatedly press the trigger switch until the time is displayed.
3. **12HR/24HR:** Press and hold the trigger switch until 12HR begins to flash. Press the trigger switch to toggle between 12 hour (12HR) or 24 hour (24HR) clock display.
4. **Hour:** Press and hold the trigger switch until the hour is flashing. Repeatedly press the trigger switch to advance hours to the correct time.
5. **Minutes:** Press and hold the trigger switch until the minutes begin flashing. Repeatedly press the trigger switch to advance minutes to the correct time.
6. **AM/PM:** If 12HR was selected, press and hold the trigger switch until AM/PM begins flashing. Press the trigger switch to toggle between AM or PM.

   NOTE:

   AM or PM will not appear in the regular time display. The motorcycle uses the selection for diagnostic purposes.
7. Press and hold the trigger switch to save time settings.
8. Turn ignition switch OFF.

Tip Indicator

WARNING

If tip occurs, check all controls for proper operation. Restricted control movement can adversely affect the performance of the brakes, clutch or ability to shift, which could result in loss of vehicle control and death or serious injury. (00350a)

See Tip and Sidestand Messages. If the motorcycle is tipped over, the word "tiP" appears in the odometer window. The engine will not start until the tip condition is reset.

Reset: Bring the motorcycle to the upright position. Turn ignition switch OFF. Turn ignition switch ON.

No Fob Message

If the motorcycle has a security system and is driven off leaving the fob behind, 'NO FOB' temporarily displays in the odometer window.

With the motorcycle separated from its assigned fob, the motorcycle can only be started with a manual PIN entry to disarm the security system. See Arming and Disarming.

Sidestand Message

See Tip and Sidestand Messages. Some vehicles have a jiffy stand interlock feature. A "SidEStAnd" message scrolls across the odometer if the jiffy stand is lowered while the motorcycle is in gear or while riding. See Jiffy Stand Interlock: International Models.

Clearing message (before starting motorcycle): Place transmission in neutral or raise jiffy stand.

Clearing message (while riding): Safely bring the motorcycle to a stop. Raise jiffy stand.

Clearing message (temporarily): Press the trigger switch. The message clears momentarily before displaying again.

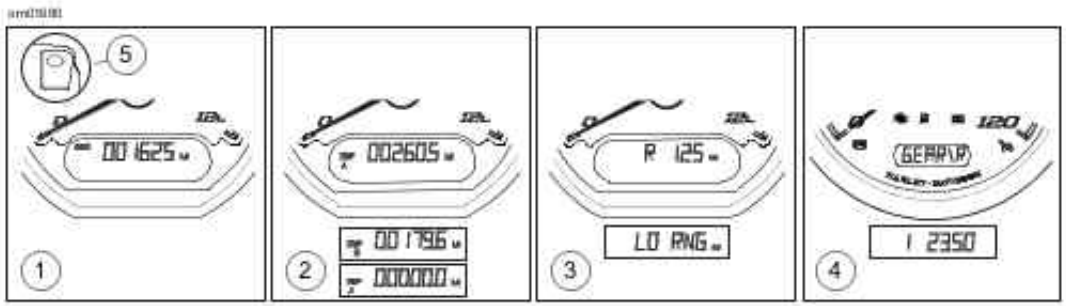

1. Odometer
2. Trip odometers (A, B, reset)
3. Fuel range (low fuel range)
4. Digital tachometer: FLHR, FLHRC
5. Trigger switch (left hand control)

Odometer Functions

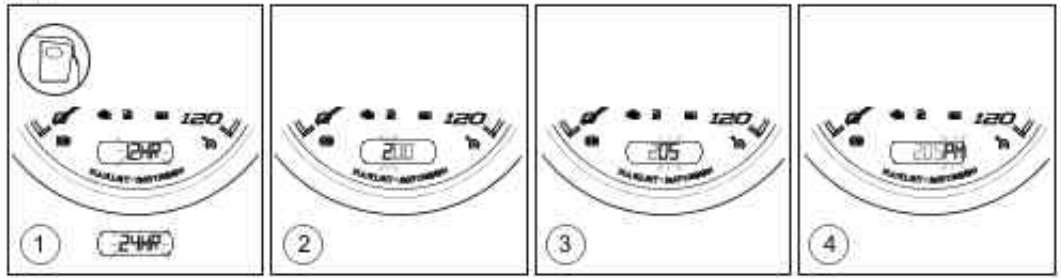

1. 12-hour/24-hour setting
2. Hours setting
3. Minutes setting
4. AM/PM setting (12-hour mode)

Setting Time: FLHR, FLHRC

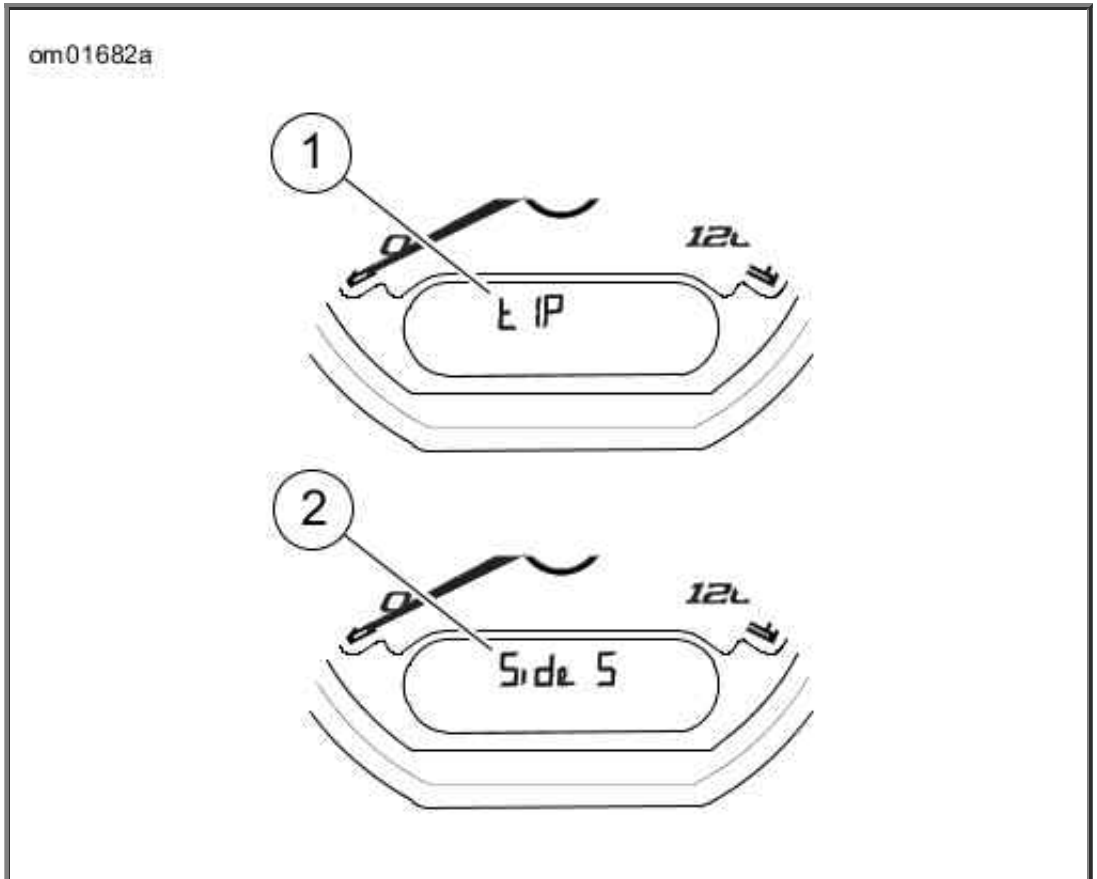

1. Tip indicator
2. Sidestand message

Tip and Sidestand Messages

Hand Controls

Engine OFF/RUN Switch

See Hand Controls and Switches. The engine OFF/RUN switch turns the engine power ON or OFF. The switch is in the right hand controls.

OFF: Press the top of the OFF/RUN switch to turn off the engine. After shutting off the engine, turn the ignition switch OFF to completely turn off the motorcycle.

RUN: Press the bottom of the OFF/RUN switch to turn on ignition power before starting the motorcycle.

Engine Start/Hazard Warning Switch

See Hand Controls and Switches. The engine start/hazard warning switch is in the right hand controls.

START: Pressing the bottom of the switch operates the starter motor. See Starting the Engine.

1. See Ignition Switch. Turn ignition switch to IGNITION.
2. Press the engine OFF/RUN switch to the RUN position. Put the transmission in neutral (neutral indicator lamp lit).
3. Press the START switch to operate starter motor.

NOTE:

- *The START switch does not attempt to start the engine when the vehicle is in gear and the clutch is engaged.*
- *If the engine does not start, the starter motor will operate for five seconds and then stop. Release and press the START switch. After several unsuccessful start attempts, see Engine. See an authorized Harley-Davidson dealer for service.*

Hazard Warning: Pressing the top of the switch (triangle symbol) operates the four-way flashers. This system allows a stranded motorcycle to be left in the four-way flashing mode and secured until help is found.

1. With the ignition switch in the IGNITION or ACCESSORY position, press the hazard warning switch (triangle) to activate the four-way flashers.
2. Turn the ignition switch to OFF (with security system fob present). Lock the ignition switch. The four-way flashers continue flashing for two hours or until the rider cancels operation. The security system will arm (on equipped vehicles).
3. To cancel, turn the ignition switch to IGNITION or ACCESSORY (with security system fob present). Press the hazard warning switch (triangle) to cancel the flashers.

Horn Switch

See Hand Controls and Switches. The horn is operated by pressing the HORN switch in the left hand controls. The horn can be activated for up to 10 seconds at a time. If the HORN switch is held for a longer period, the horn will automatically deactivate.

Headlamp Dimmer Switch

See Hand Controls and Switches. The headlamp dimmer switch is in the left hand controls. The switch has three positions.

High beam: Press the top of the switch to activate the high beam. The high beam indicator shows when the high beam is turned on.

Low beam: Press the lower portion of the switch to activate the low beam.

Flash to pass: Press and hold the bottom of the switch to flash the high beam lamp. When in accessory mode, press the flash to pass switch to activate the headlamp.

Turn Signal Switches

See Hand Controls and Switches. The turn signal switches are in the left and right hand controls.

Activating: Press and release the left or right turn signal switch to activate the turn signal lamps. The lamps flash until they are automatically canceled or manually canceled by the rider.

Automatic canceling: The turn signal lamps automatically cancel when a full turn has been detected. The lamps also cancel if the turn signal has been activated for a prolonged period while riding. The lamps will not cancel while the motorcycle remains stopped or at a very low speed.

Manual canceling: To cancel the turn signal, press and release the turn signal switch a second time. To activate the opposite turn signal, press and release the turn signal switch for the new direction. The first turn signal cancels and the opposite turn signal lamps begin flashing.

NOTES:

- *If a turn signal indicator flashes rapidly, a turn signal bulb is not operating. Exercise caution and use hand signals. Replace inoperative components at earliest opportunity.*
- *Front turn signal lamps also function as running lamps on some vehicles.*

Cruise Control Switch

See Hand Controls and Switches. The CRUISE/SET/RESUME switch automatically regulates the speed of the vehicle. See Cruise Control for detailed operation.

CRUISE: Press the CRUISE switch straight in to enable cruise control. The cruise control indicator lights orange. Pressing the CRUISE switch again turns off cruise control.

SET/-: With cruise control enabled, press SET/- to set the cruising speed. The cruise control indicator lights green. While at cruising speed, press SET/- to decrease the regulated speed.

RESUME/+: If cruise control is disengaged (such as a braking event), press RESUME/+ to resume the previous cruising speed. While at cruising speed, press RESUME/+ to increase speed.

Push-To-Talk (PTT)/Squelch Switch

See Hand Controls and Switches. The Push-To-Talk (PTT)/Squelch (SQ+/SQ-) switch is used to operate the CB radio or rider/passenger intercom on equipped vehicles. See the BOOM! BOX OWNER'S MANUAL for complete instructions.

PTT: With the CB or intercom turned on and headset connected, press and hold the PTT switch to transmit over the CB or through the intercom. Release the PTT switch to end transmission.

SQ+/SQ-: The CB audio remains muted until a CB signal stronger than the squelch level is received. Press SQ- to decrease the squelch threshold (allowing more signals and noise). Press SQ+ to raise the squelch threshold (allowing only stronger signals).

Voice Recognition Switch

See Hand Controls and Switches. The voice recognition switch activates the voice recognition features on equipped vehicles. With a headset connected, press the voice command switch. The radio shows a list of available commands. Speak the desired command into the headset microphone. See the BOOM! BOX OWNER'S MANUAL.

Vehicle Information Switch

See Hand Controls and Switches. On equipped vehicles, press the vehicle information switch to display the following items on the radio screen when the radio is turned on. See the BOOM! BOX OWNER'S MANUAL.

Air Temperature: Displays the measured ambient air temperature.

Engine Oil Pressure: Displays the engine oil pressure. Engine oil pressure will normally vary from 5 psi 34 kPa at idle speed to 30-38 psi 207-262 kPa at 2000 rpm when engine is at normal operating temperature of 230 °F 110 °C .

EITMS: Displays the status of the Engine Idle Temperature Management System (EITMS). The status may be ACTIVE, ENABLED or DISABLED. See Engine Idle Temperature Management System.

HOME/VOLUME/PREVIOUS/NEXT Switch

See Hand Controls and Switches. The HOME/VOLUME/PREVIOUS/NEXT five-way switch operates radio features on equipped vehicles. See the BOOM! BOX OWNER'S MANUAL.

HOME: Press the HOME switch straight in to transition to the HOME screen on the radio.

VOLUME: Press the switch up to increase volume or down to decrease volume.

PREVIOUS/NEXT: Press the switch to the left or right to seek up/down for a radio station or to select the previous/next media file.

CURSOR/SELECT Switch

See Hand Controls and Switches. The CURSOR/SELECT five-way switch operates radio features on equipped vehicles. See the BOOM! BOX OWNER'S MANUAL.

SELECT: Press the SELECT switch straight in to select or toggle a feature on the radio screen.

CURSOR: Press the switch in the desired direction to move the cursor or selection on the radio screen.

Trigger Switch

See Hand Controls and Switches. The trigger switch is on the front of the left hand controls.

Vehicle off: Press the trigger switch to display the accumulated mileage in the odometer.

Vehicle in accessory/ignition mode: Press the trigger switch to cycle through the odometer functions. See Odometer Functions.

Front Brake Lever

⚠WARNING

Do not position fingers between hand control lever and handlebar grip. Improper hand

Do not position fingers between hand control lever and handlebar grip. Improper hand positioning can impair control lever operation and cause loss of vehicle control, which could result in death or serious injury. (00032a)

See Hand Controls and Switches. The front brake lever is on the right handlebar and is operated with the fingers of the right hand. Squeeze the brake lever to actuate the front brakes. See Brake System.

Throttle Control Grip

See Hand Controls and Switches. The throttle control grip is on the right handlebar and is operated with the right hand.

Decelerate: Slowly turn throttle control grip clockwise (toward front of motorcycle) to close the throttle.

Accelerate: Slowly turn throttle control grip counterclockwise (toward rear of motorcycle) to open the throttle.

Roll-off position: The throttle control grip can be turned clockwise slightly past the idle position. Turning to the roll-off position disengages cruising speed. The roll-off position is also used when enabling/disabling EITMS. See Engine Idle Temperature Management System.

Clutch Hand Lever

⚠WARNING

Do not position fingers between hand control lever and handlebar grip. Improper hand positioning can impair control lever operation and cause loss of vehicle control, which could result in death or serious injury. (00032a)

See Hand Controls and Switches. The clutch hand lever is on the left handlebar and is operated with the fingers of the left hand.

1. Slowly pull clutch hand lever in against handlebar grip to disengage clutch.
2. Shift to first gear using the gear shifter lever. See Gear Shift Lever.
3. Slowly release the clutch hand lever to engage clutch.

The vehicle can be started in any gear as long as the clutch lever is pulled in. If the clutch is not disengaged, the vehicle will not start when in gear.

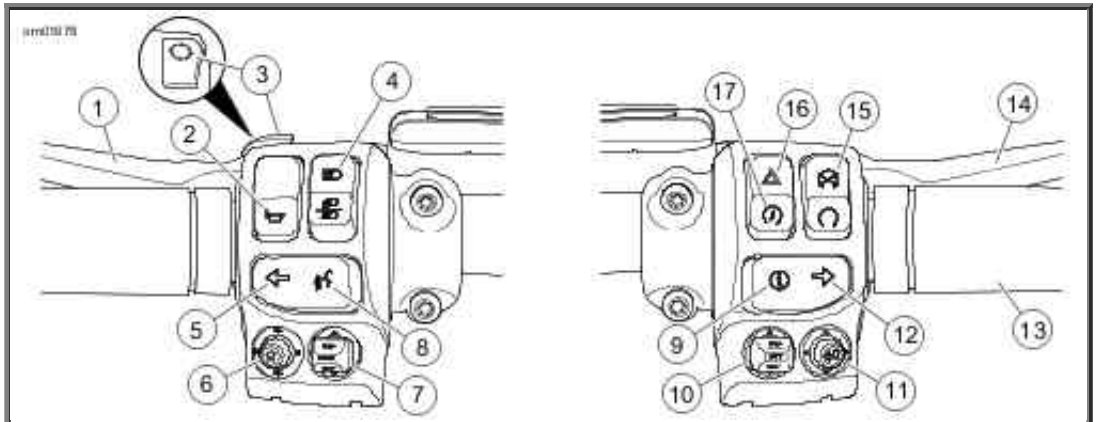

1. Clutch hand lever
2. Horn
3. Trigger
4. Headlamp dimmer
5. Left turn signal
6. Home/volume/previous/next
7. Cruise control
8. Voice recognition
9. Vehicle information
10. Push-to-talk/squelch
11. Cursor/select
12. Right turn signal
13. Throttle control grip
14. Front brake lever
15. Engine off/run
16. Hazard warning
17. Engine start

Hand Controls and Switches

Heated Hand Grips

See Heated Hand Grips. Models with heated hand grips have a variable heat control dial on the end of the left-hand grip.

Rotate the control dial to align the desired setting with the arrow on the grip. The heat settings range from 1 (minimum) to 6 (peak). Rotate to the off icon to turn off heat.

The hand grips are thermostatically-controlled, providing a constant grip temperature regardless of changes in the outside temperature. To prevent battery drain, heated hand grips should only be used while the engine is running.

The sensor for thermostatic control is housed in the left-hand grip. Maintaining consistent hand contact with both left and right-hand grips produces the most consistent results. If the hand grips are not producing heat, see Heated Hand Grips.

NOTE:

Allow approximately 20 minutes for grips to reach final operating temperature.

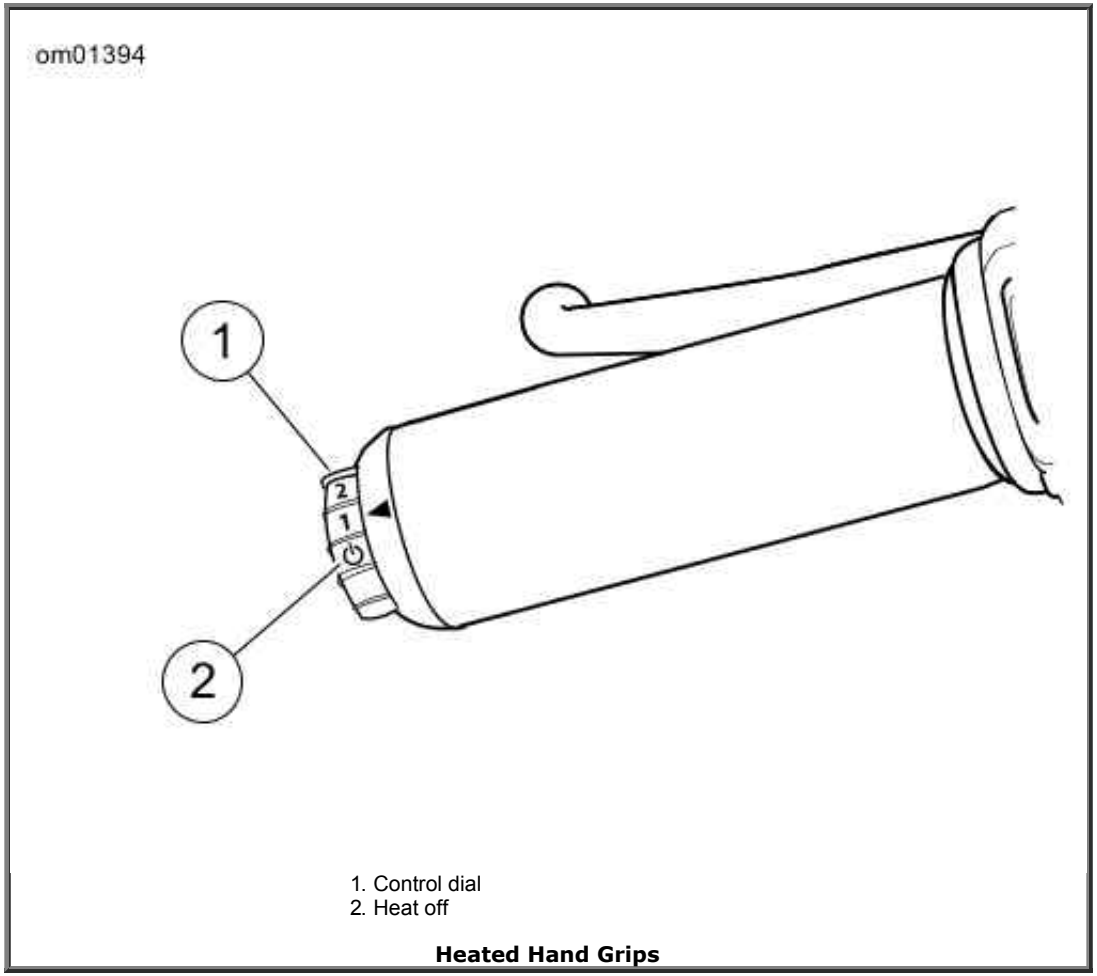

1. Control dial
2. Heat off

Heated Hand Grips

Cruise Control

WARNING

Do not use the cruise control system in heavy traffic, on roads with sharp or blind curves or on slippery roads of any kind. Using the cruise control in these circumstances can cause loss of control, which could result in death or serious injury. (00083a)

WARNING

Travel at speeds appropriate for road and conditions and never travel faster than posted

Travel at speeds appropriate for road and conditions and never travel faster than posted speed limit. Excessive speed can cause loss of vehicle control, which could result in death or serious injury. (00008a)

Turn Cruise On

NOTE:

Cruise control only works at speeds between 30-90 mph 48-90 km/h in third or higher gear.

See Cruise Control. Press the CRUISE switch to turn on cruise (1). When on, the cruise icon in the speedometer face glows amber.

Set Cruise Speed

See Cruise Control. When the motorcycle reaches your intended speed, press the SET/- switch down to set the cruise speed (2). The amber cruise icon changes to green.

If necessary, adjust the cruise speed to match the speed limit or traffic conditions:

Increase/Decrease Cruise

Tapping the RES/+ switch up increases speed by 1 mph 1.6 km/h . Holding up the RES/+ switch gradually increases cruise speed.

Tapping the SET/+ switch down decreases speed by 1 mph 1.6 km/h . Holding the switch down gradually decreases cruise speed.

Disengage Cruise

See Cruise Control. To drop out of cruise speed, roll the throttle closed through the roll-off switch (3).

Cruise also disengages when the rider:

- Squeezes the front brake lever or presses the rear brake pedal.
- Squeezes the clutch lever.
- Rolls the throttle open more than 10 mph 16 km/h above the set speed.

Resume Cruise

NOTE:

If the current speed is more than 15 mph 24 km/h below the cruise speed, cruise will not resume.

See Cruise Control. If cruise has been disengaged yet the cruise indicator is amber, pressing the RES/+ switch up resumes cruise (4). The icon glows

green. The motorcycle automatically resumes cruise at the set speed.

Turn Cruise Off

Press the CRUISE switch to turn off cruise control. The cruise icon goes blank.

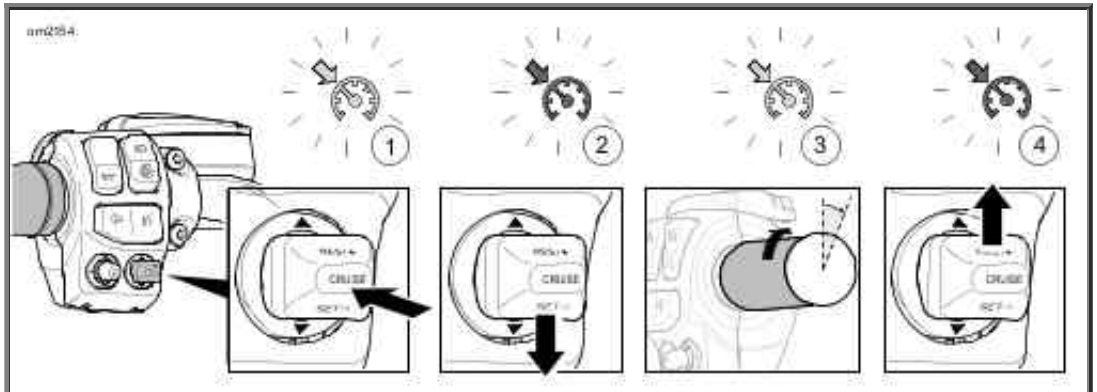

1. Cruise on/off (CRUISE) (amber indicator)
2. Set speed (SET/-) (green indicator)
3. Disengage cruise (amber indicator)
4. Resume speed (RES/+) (green indicator)

Cruise Control

Accessory Switch

CAUTION

It is possible to overload your vehicle's charging system by adding too many electrical accessories. If the combined electrical accessories operating at any one time consume more electrical current than the vehicle's charging system can produce, the electrical consumption can discharge the battery and cause damage to the vehicle's electrical system. See an authorized Harley-Davidson dealer for advice about the amount of current consumed by additional electrical accessories or for necessary wiring changes. (00211c)

See Accessory Connector (under left side cover). The accessory switch controls power to the accessory connector under the left side cover. See a Harley-Davidson dealer or www.harley-davidson.com for electrical accessories that fit your motorcycle.

FLHR, FLHRC: See Nacelle Switches: FLHR, FLHRC. The accessory switch is on the right side of the nacelle.

Other models: See Dash Panel Switches. A panel for accessory switches is next to the ignition switch on the dash panel. Switches can be added for installed accessories. The maximum load per switch is 2 amps.

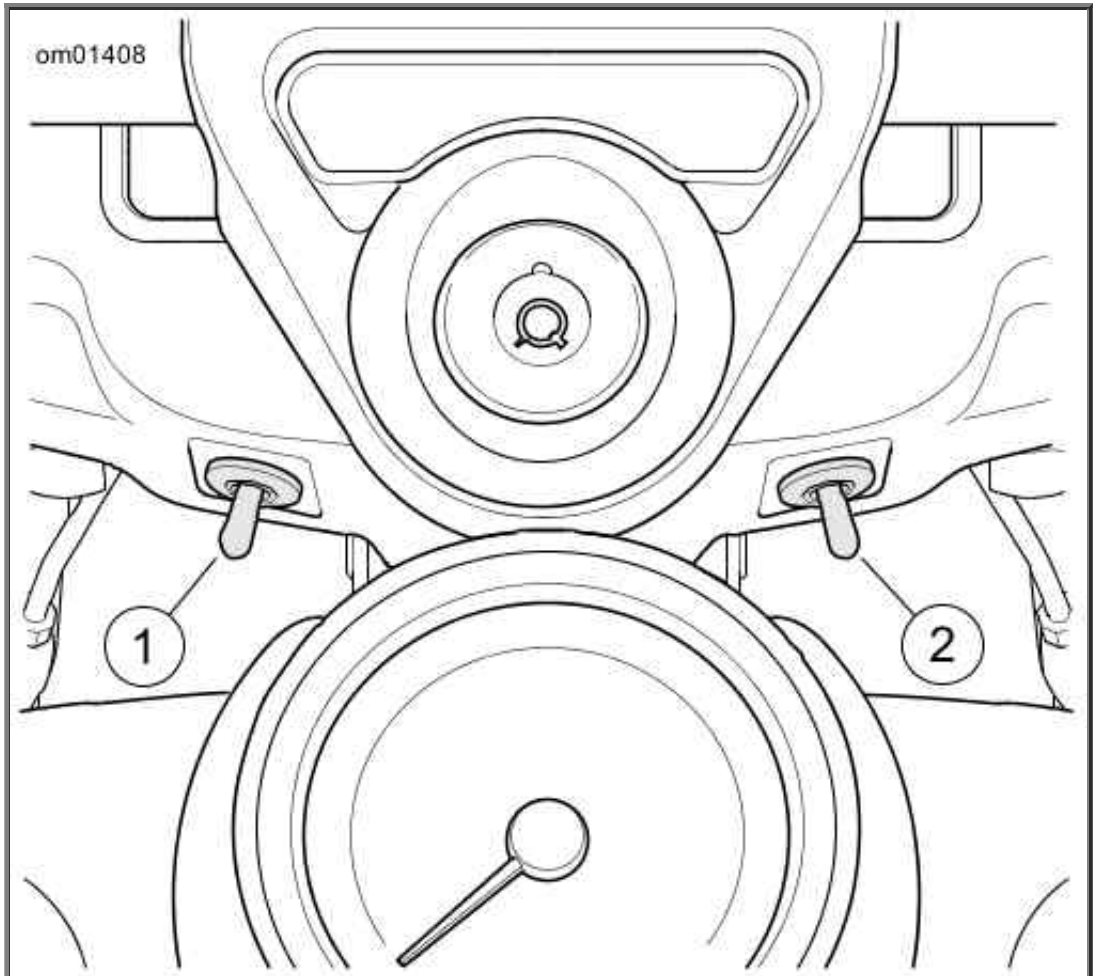

1. Auxiliary/fog lamp switch
2. Accessory switch

Nacelle Switches: FLHR, FLHRC

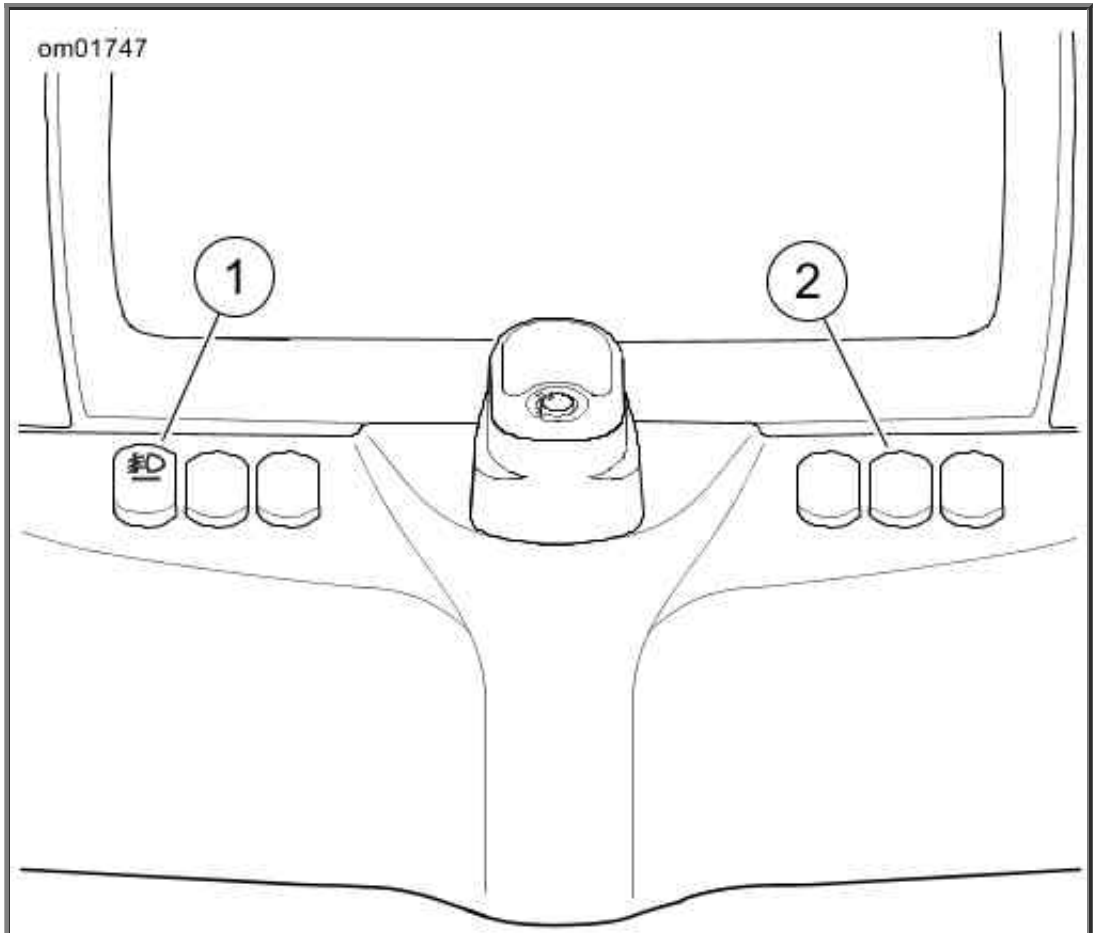

1. Auxiliary/fog lamp: FLHTCU, FLHTCUL, FLHTCU TC, FLHTK, FLHTKL
2. Blanks (for accessory switches)

Dash Panel Switches

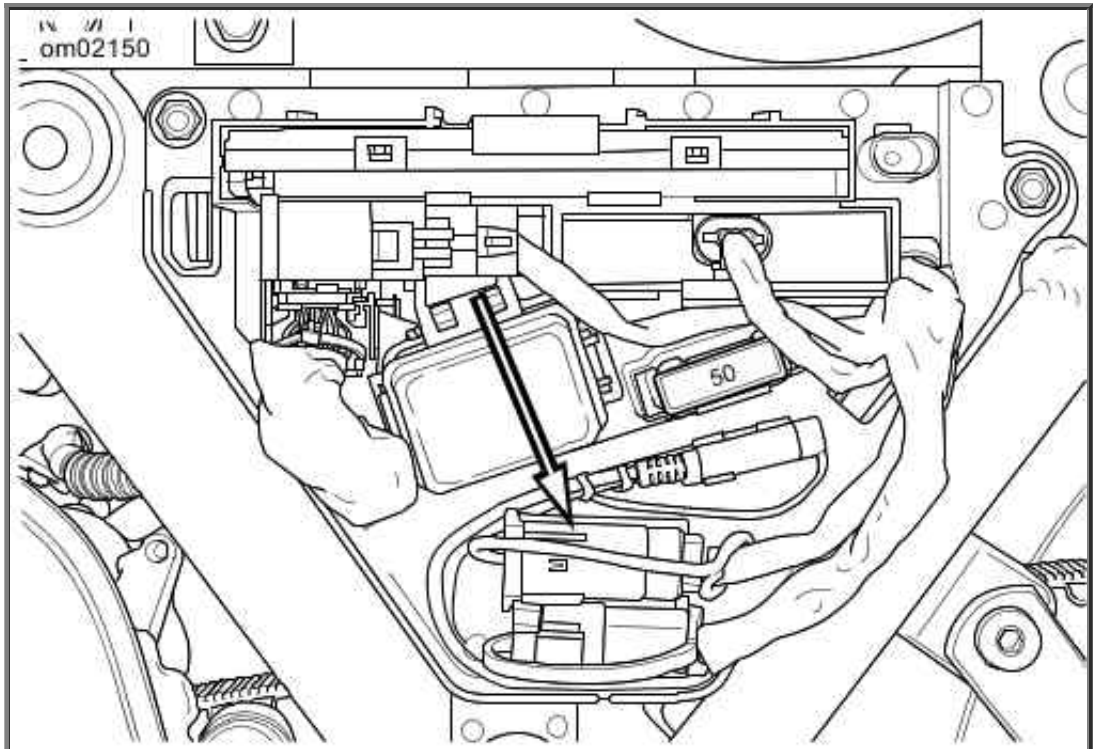

Accessory Connector (under left side cover)

Auxiliary/Fog Lamps

The auxiliary/fog lamps provide additional light to the road and surrounding environment in dark or rainy conditions. The lamps also give the motorcycle more visibility to other motorists.

FLHR, FLHRC: See Nacelle Switches: FLHR, FLHRC. The switch is on the left side of the nacelle.

Other models: See Dash Panel Switches. The switch is on the left side of the dash panel. When the lamps are on, the auxiliary/fog lamp indicator is displayed in the instruments as shown in Instruments: Models Except FLHR, FLHRC.

Domestic/Canada configurations: The auxiliary/fog lamps are configured to automatically turn off when the high beam headlamp is turned on, except as required by state/province.

Auxiliary/fog lamps can be configured to turn on or off with high beam by the dealer, based on legal requirements for each location.

Passenger Controls

See Passenger Controls. Some vehicles have passenger controls on the right side of the Tour-Pak. These controls allow the passenger to operate functions in the infotainment system. See BOOM! BOX OWNER'S MANUAL for detailed instructions.

Mode Switch

MODE: Press switch straight in to select the next available audio source.

UP/DN: Press switch up/down to select the previous/next radio station or media file.

Push-To-Talk (PTT)/Volume (VOL) Switch

PTT: Press switch to transmit over CB or intercom.

VOL+/VOL-: Press switch up/down to raise/lower the volume to the passenger headset.

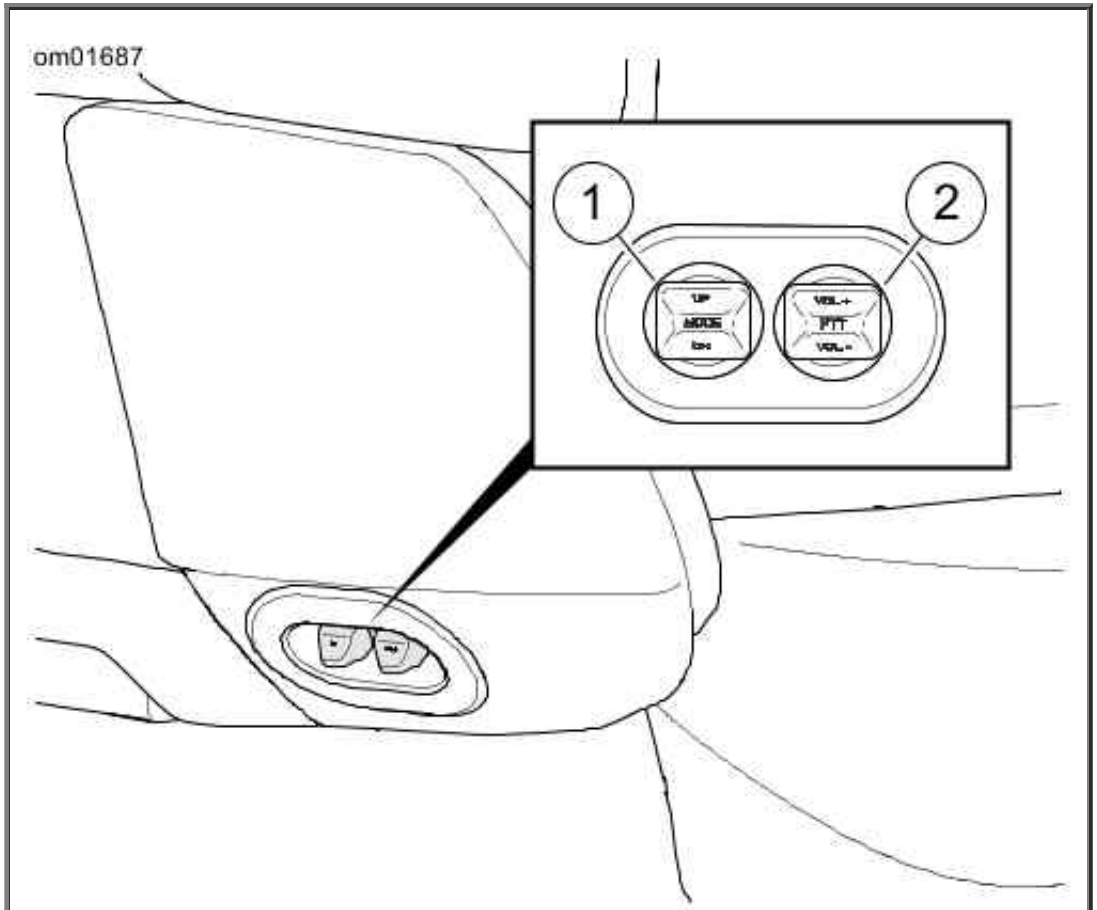

1. MODE/UP/DOWN Switch
2. Push-To-Talk (PTT)/Volume (VOL±) Switch

Passenger Controls

Boom! Box Infotainment System

WARNING

Set volume levels and other controls on audio and electronic devices before riding. Distractions can lead to loss of control, resulting in death or serious injury. (00088b)

WARNING

Set CB channel, squelch threshold and volume before riding to minimize adjustments on the road. Distractions can lead to loss of control, resulting in death or serious injury. (00089a)

⚠WARNING

Do not select a volume level that blocks out traffic noise or interrupts the concentration necessary for safe operation of the motorcycle. Distractions or a volume level that blocks out traffic noise could cause loss of control resulting in death or serious injury. (00539b)

NOTES:

- *See BOOM! BOX OWNER'S MANUAL for a complete description of features and instructions for operation.*
- *Perform system set-up and get familiar with the controls and features of the infotainment system before operating the motorcycle on the road.*
- *For additional instruction and information, see an authorized Harley-Davidson dealer and online resources at www.harley-davidson.com/touring.*

See Boom! Box Infotainment System. Some vehicles have a Boom! Box infotainment system. The system operates while the ignition switch is in the IGNITION or ACCESSORY position. The following controls are on the radio.

Power/Mute: Press and hold to turn the system on/off. Press briefly to mute audio and pause media.

Home: Press to display the home screen.

Favorites: Press to display the saved favorites.

Navigation: On equipped models, press this switch to enter GPS navigation (or to display compass on some models).

Soft keys: Some systems have soft keys. Press the corresponding soft key to select items on the screen.

Touchscreen: Some systems have a touchscreen. Select items on the screen to operate the infotainment system. The touchscreen can be operated while wearing riding gloves. The touchscreen has a replaceable screen protector which must remain on the screen. Damage to the screen due to use without a screen protector will not be covered under warranty.

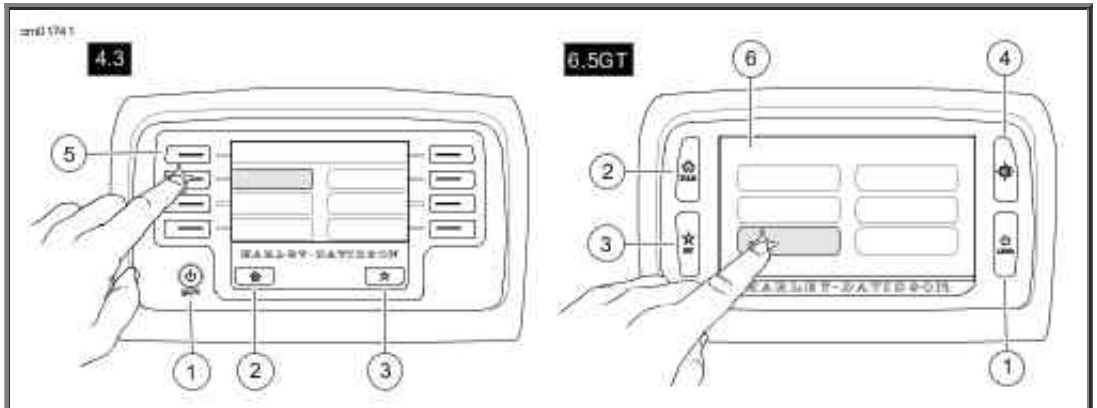

1. Power/mute
2. Home screen
3. Favorites
4. Navigation
5. Soft key
6. Touchscreen

Boom! Box Infotainment System

Media/Storage Compartment (USB Port)

The media compartment has a USB port to connect with a phone, media device or USB drive. Use an interface cable to connect with these devices. The USB port is powered and operational when the vehicle is turned on or in accessory mode.

Devices can be added or removed while the radio is on. However, when importing/exporting files or installing updates to the radio, do not disconnect the USB device until the task has completed.

Keep the compartment door closed while riding to prevent items from falling out. Remove valuable items from the media compartment before leaving the vehicle unattended.

NOTE:

Do not use media players with hard drives. Vibration may cause internal damage.

Media/Storage Compartments: FLTRU, FLTRX, FLTRXS

See Storage/Media Compartment: FLTRU, FLTRX, FLTRXS. Storage compartments are on the right and left side of the fairing. The USB port for media devices is in the right side compartment.

Open: Pull up on the compartment door as shown.

Cleaning: The rubber or fabric insert in the compartment is attached with hook and loop fastening tape and can be removed for cleaning.

Media Compartment: FLHT, FLHX

See Media Compartment: FLHT, FLHX. Other vehicles have a media compartment on the right side of the radio as shown. Insert the phone or media device into the foam cradle to secure the device and isolate it from vibration.

Open: Push lower portion of door and release to open.

Close: Firmly push the door shut until the latch engages.

Reset door latch: If compartment door was forced open or is not latching properly, reset the door latch. Push the door shut. Open the door. Close the door again to engage the latch mechanism.

Cleaning: The cradle can be removed for cleaning or to assist with installing or removing a device from the compartment.

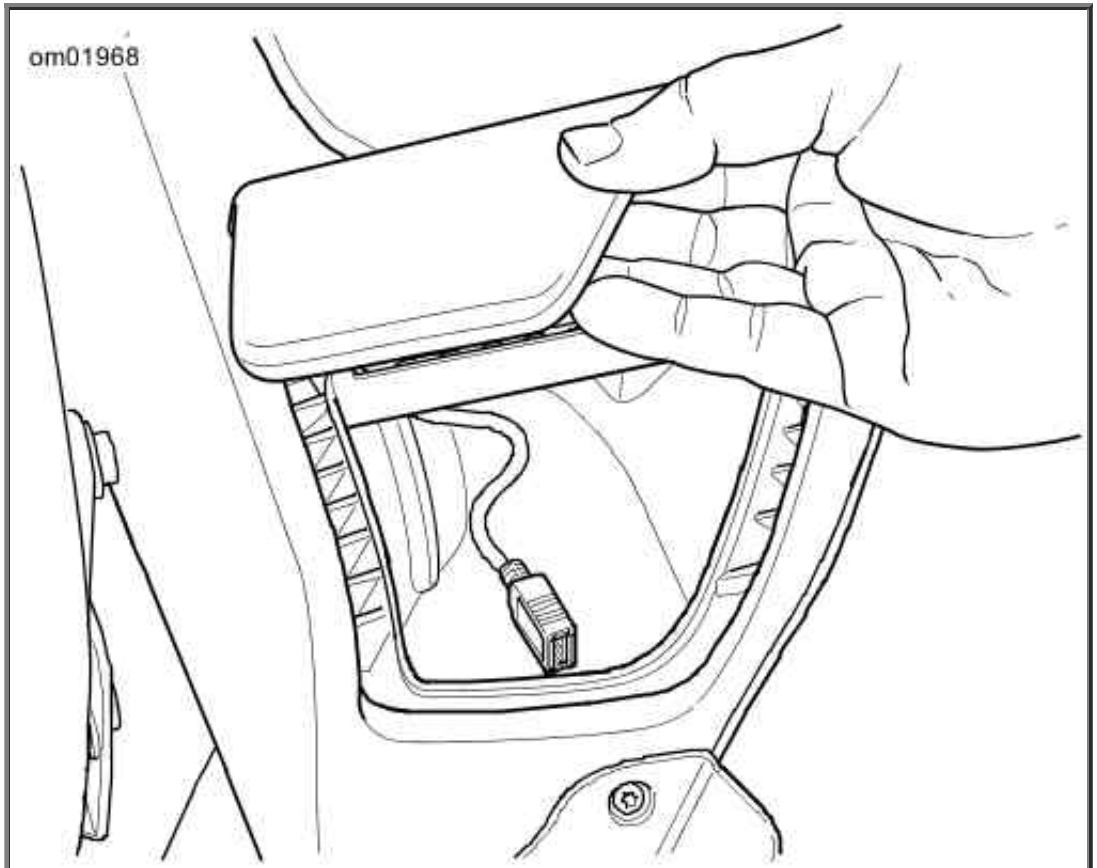

Storage/Media Compartment: FLTRU, FLTRX, FLTRXS

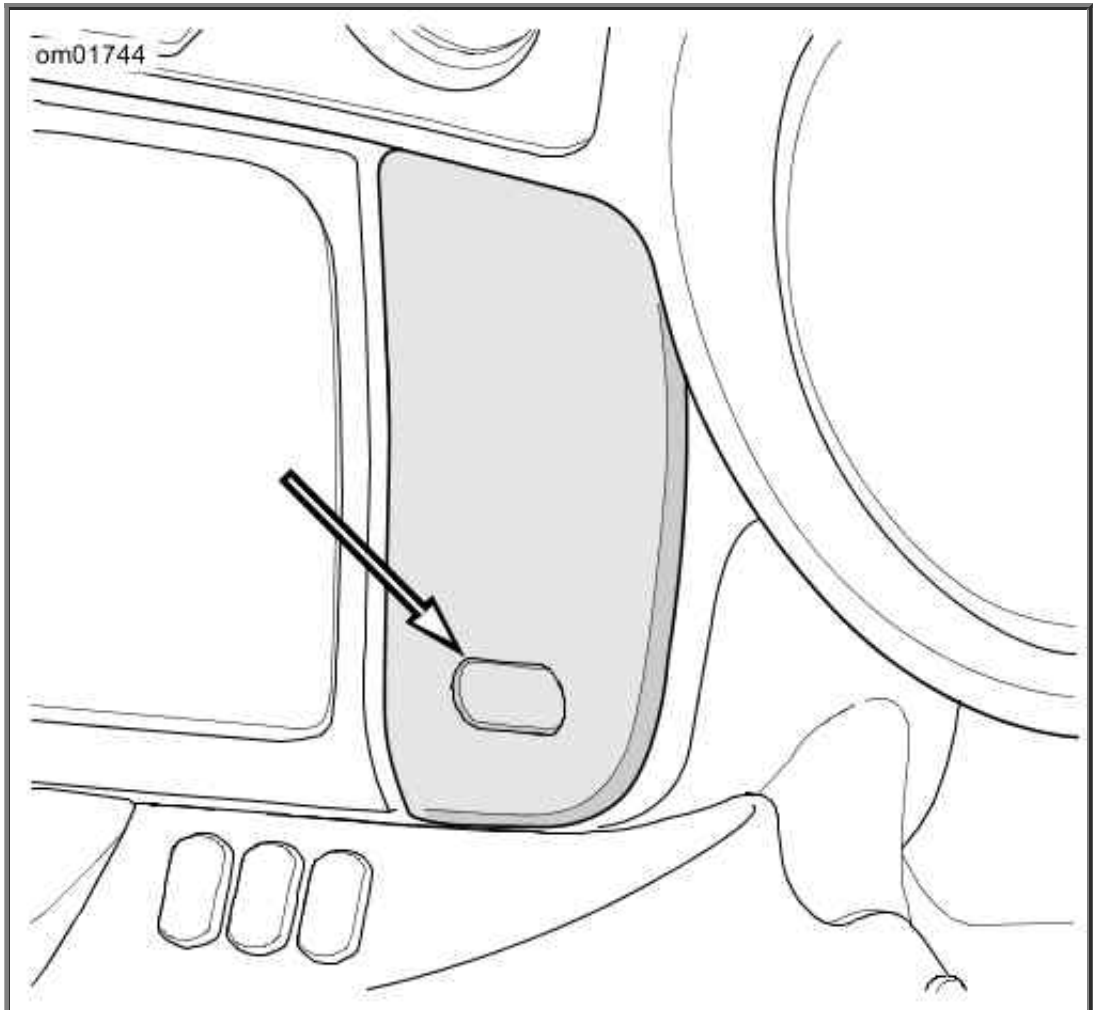

Media Compartment: FLHT, FLHX

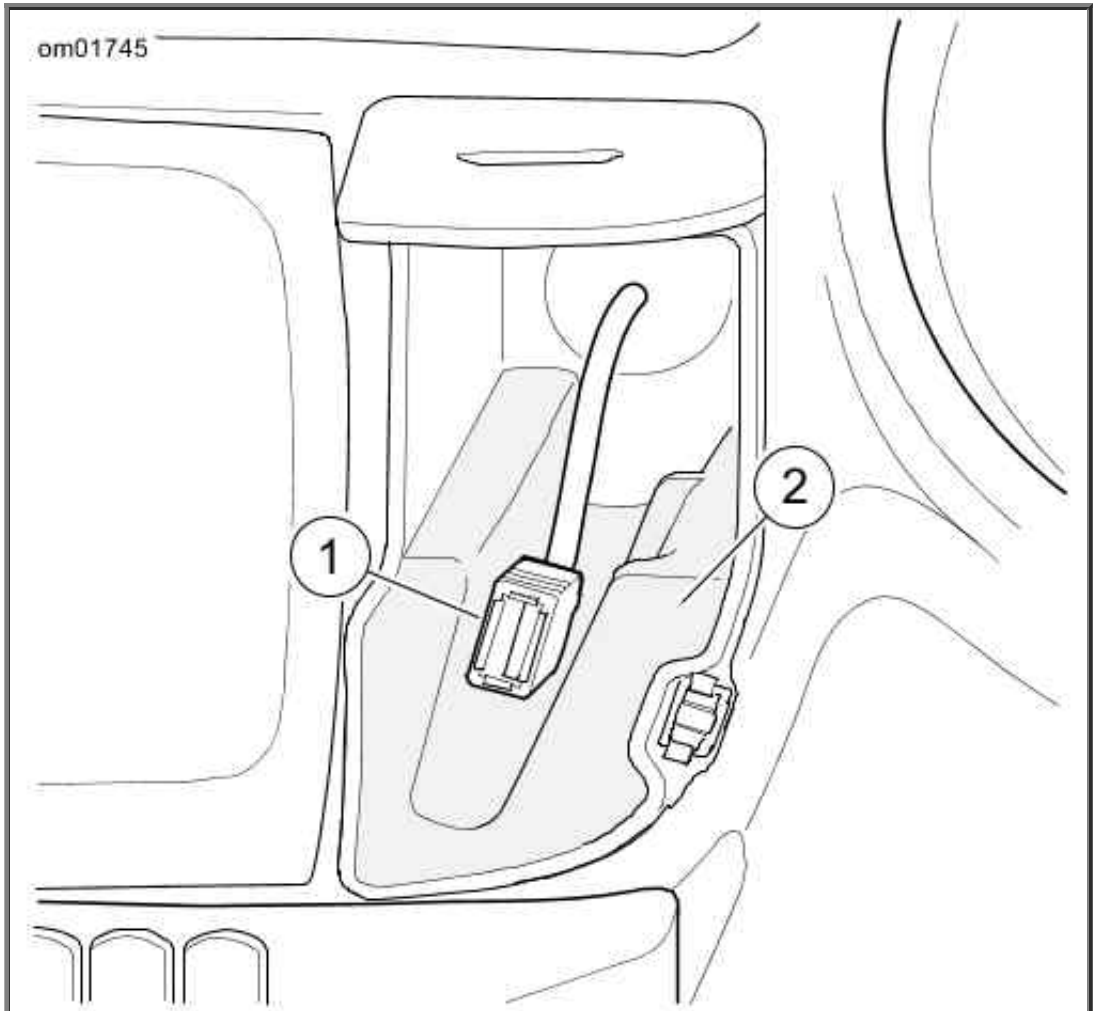

1. USB port
2. Cradle

USB Port: FLHT, FLHX

Headset Connectors

CAUTION

Do not pull on the cord to remove the headset from the socket. Pull on the headset jack to disconnect the headset from the socket. (00174a)

See Rider Headset Connector and Passenger Headset Connector. Some vehicles have a rider headset connector on the fuel tank panel and a passenger headset connector on the left speaker pod. The headsets are used to operate the CB, intercom, voice recognition and other features on equipped models.

Use the Harley-Davidson 7-pin DIN headset that is supplied with equipped models or purchased from a Harley-Davidson dealer. Other headset microphones will not work. See the instructions that are included with the headset to install in a helmet.

Connect the headset by aligning the connector index on the headset connector with the console index on the connector.

Audio routing for the headset is controlled through the radio. Volume and push-to-talk functions are done using the rider and passenger hand controls. See the BOOM! BOX OWNER'S MANUAL.

The socket caps remain shut when not in use to prevent dirt and water from entering the socket. Close both socket caps before washing the motorcycle.

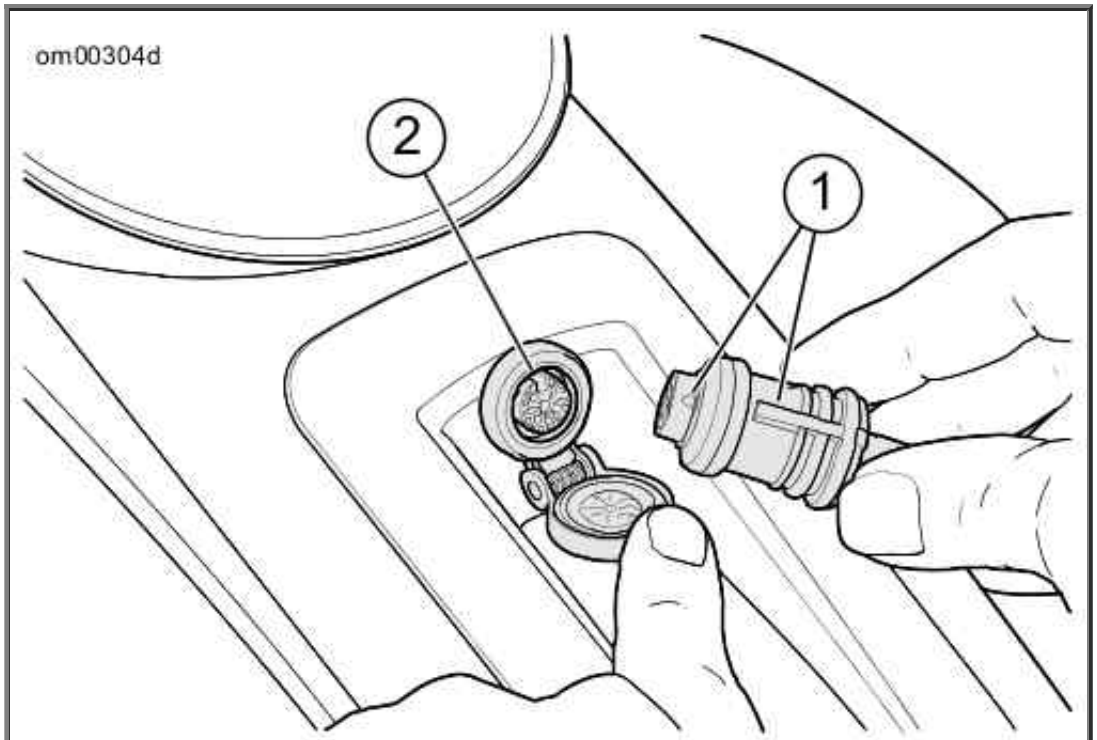

1. Headset connector index
2. Console index

Rider Headset Connector

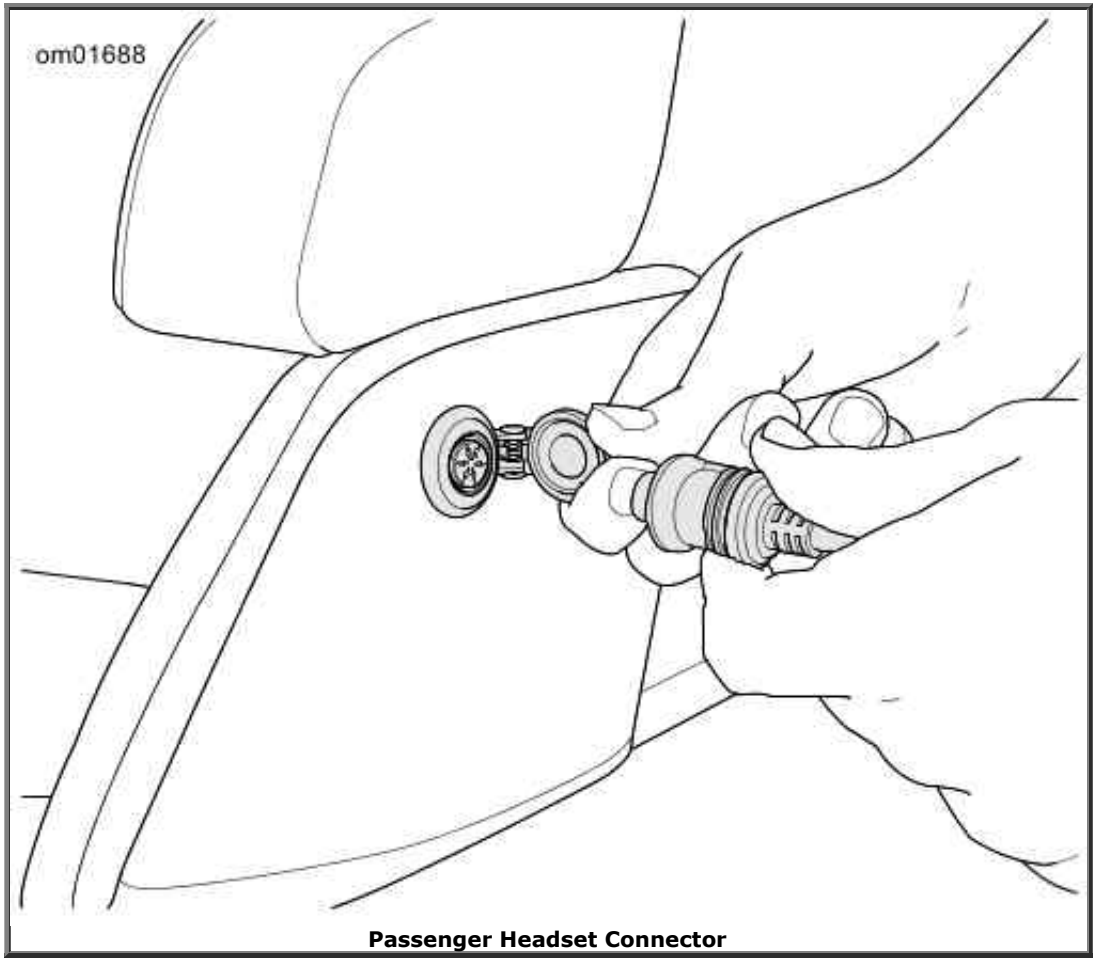

Passenger Headset Connector

Electronic Throttle Control (ETC)

The motorcycle has an Electronic Throttle Control (ETC). Instead of using a mechanical cable connection to the throttle body, this technology uses redundant grip sensors to indicate rider requested throttle position to the Electronic Control Module (ECM). The ECM then regulates proper fuel/air intake and ignition timing based on the rider's actions.

The Electronic Control Module (ECM) monitors the status of the grip sensors, throttle plate actuation and airflow. If Trouble Codes are detected, the ECM disables cruise control, illuminates the check engine lamp and will transition to one of the following modes.

ETC Limited Performance Mode

The rider experiences near-normal operation. The motorcycle operates with provisions to guard against unintended acceleration.

ETC Power Management Mode

The throttle plate actuator returns to an "idle detent" or "limp-home" position, which provides enough torque to achieve speed of about 25 mph 40 km/h . The motorcycle's response to grip sensor input is reduced.

ETC Forced Idle Mode

The throttle plate actuator is forced to a "fast idle" position, which provides enough torque to crawl, but not enough torque to operate at traffic speeds.

ETC Forced Shut Down Mode

The engine is forced to shut down.

Gear Shift Lever

Location

See Gear Shift Lever and Shift Pattern. The gear shift lever is located on the left side of the motorcycle and is operated with the left foot. The shift lever changes gears in a sequential six-speed transmission.

Shift Pattern

CAUTION

The clutch must be fully disengaged before attempting a gear shift. Failure to fully disengage the clutch can result in equipment damage. (00182a)

See Gear Shift Lever and Shift Pattern. Each gear must be engaged in sequence. Lift the gear shift lever to upshift and press the lever to downshift. After each gear change, release the gear shift lever to allow it to return to its resting position. See Shifting Gears.

Neutral

Neutral is located between first and second gear. The transmission can be shifted to neutral from either first or second gear. Lift or press the gear shift lever one-half of its stroke. In neutral, the indicator lamp will light.

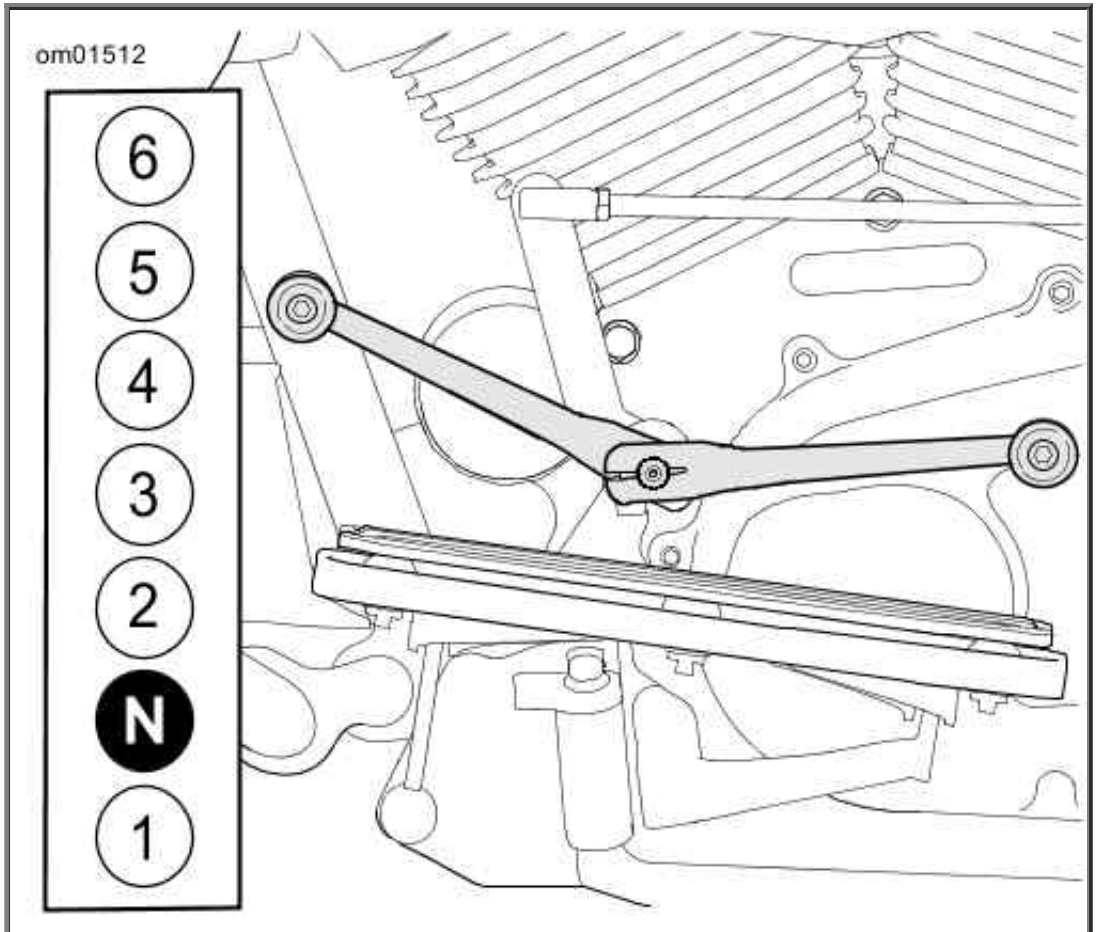

Gear Shift Lever and Shift Pattern

Heel-Toe Shift Lever

See Heel-Toe Foot Shift Lever. Some motorcycles have a heel-toe shift lever. Upshifts can be made with the heel of the left foot. Upshifts and downshifts can be made with the toe.

Downshift (toe): Push toe shift lever all the way down (full stroke).

Upshift (toe): Lift the toe shift lever all the way up (full stroke).

Upshift (heel): Push the heel shift lever all the way down (full stroke).

Release the heel-toe shift lever after each gear change to allow the lever to return to its center position before another gear change.

NOTE:

The height of the heel-toe shift lever can be adjusted for rider preference. Verify that full lever movement is available after adjustment. See the service manual.

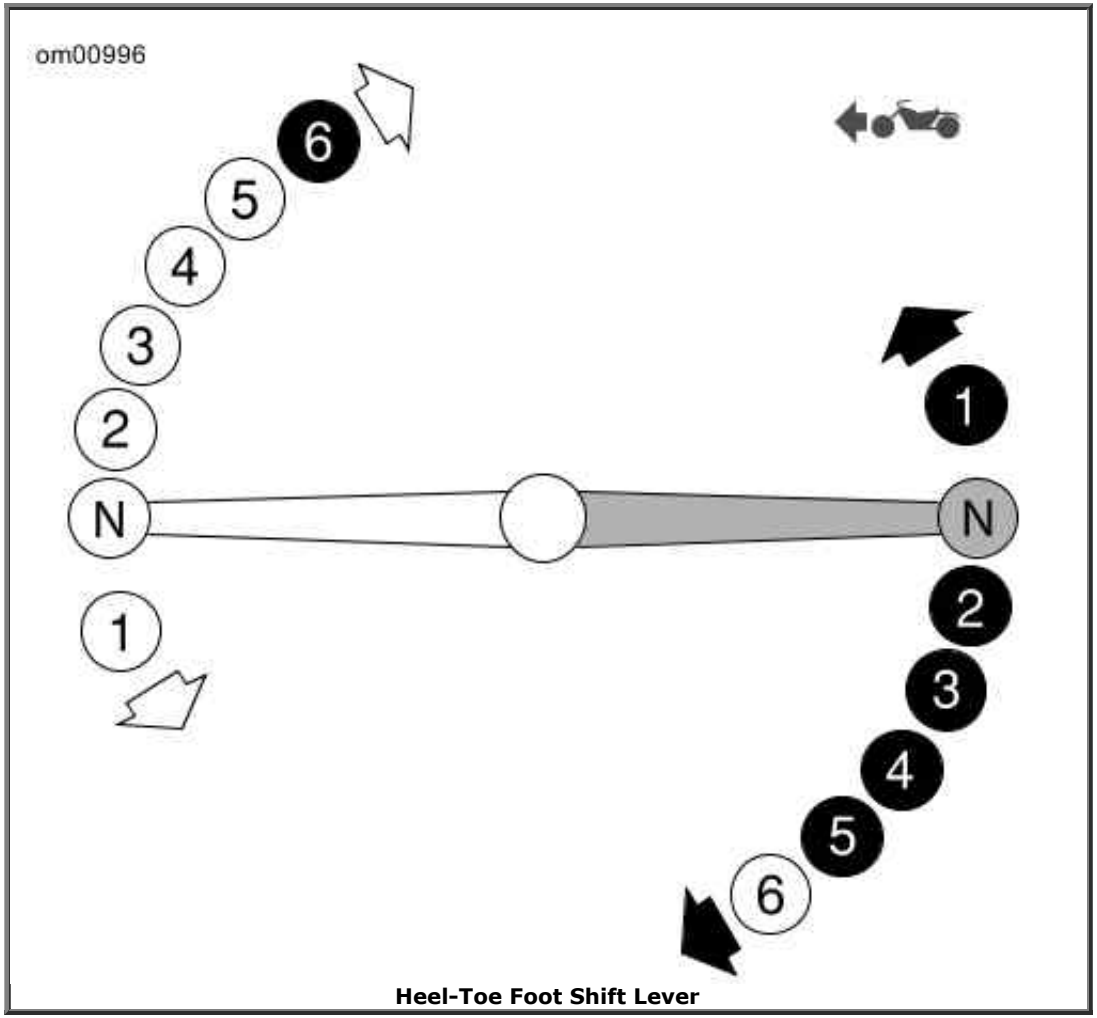

Heel-Toe Foot Shift Lever

Reflex Linked Anti-Lock Brake System (ABS)

Identification

See Wheel Speed Sensor Clip (ABS identification). Some vehicles have Reflex Linked ABS. Vehicles with this option can be identified by a wheel speed sensor on the left side of the front wheel. The wheel speed sensor has a clip with an 'ABS' marking.

See ABS Module (EHCU) (behind right side cover). These vehicles can also be identified by an ABS module (EHCU) behind the right side cover.

See Brake System and Reflex Linked ABS Operation for linked brake operation.

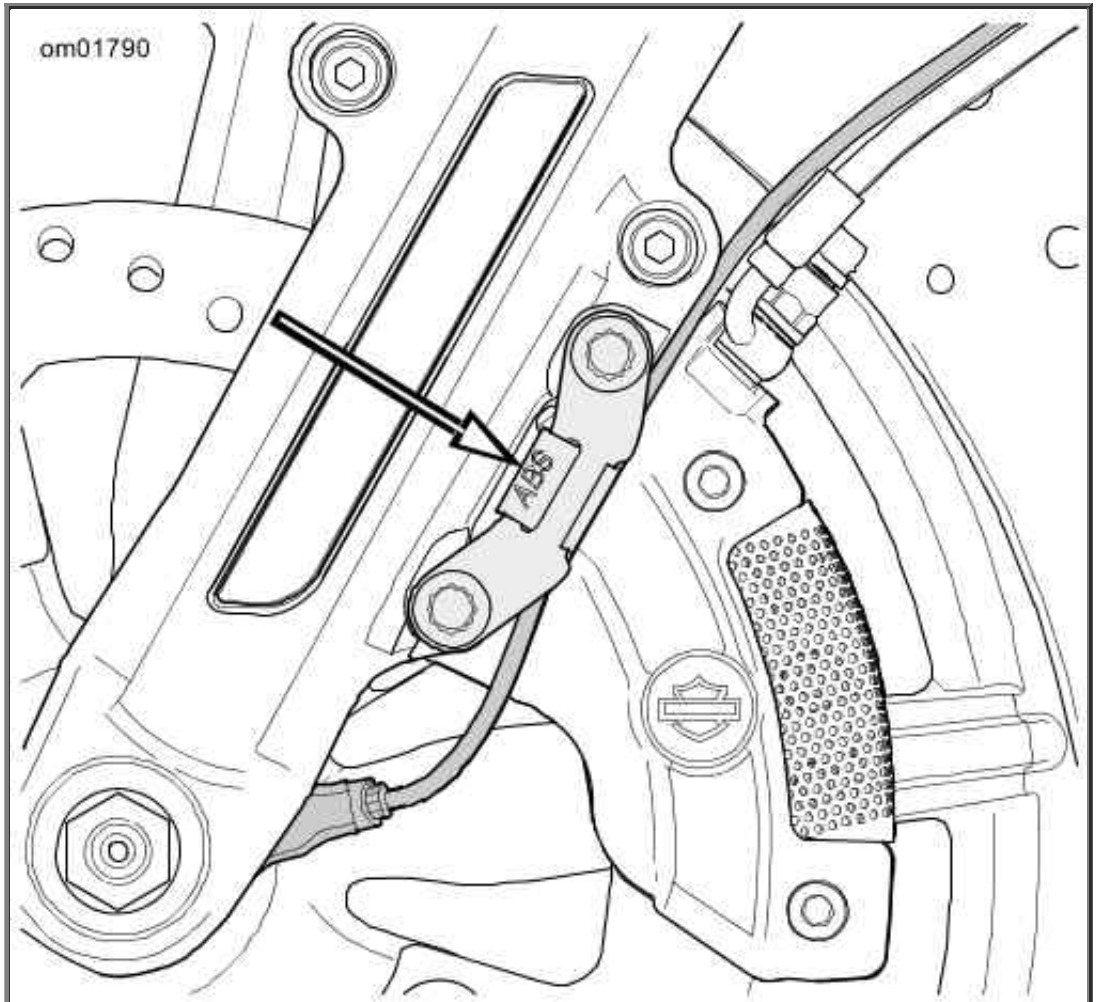

Wheel Speed Sensor Clip (ABS identification)

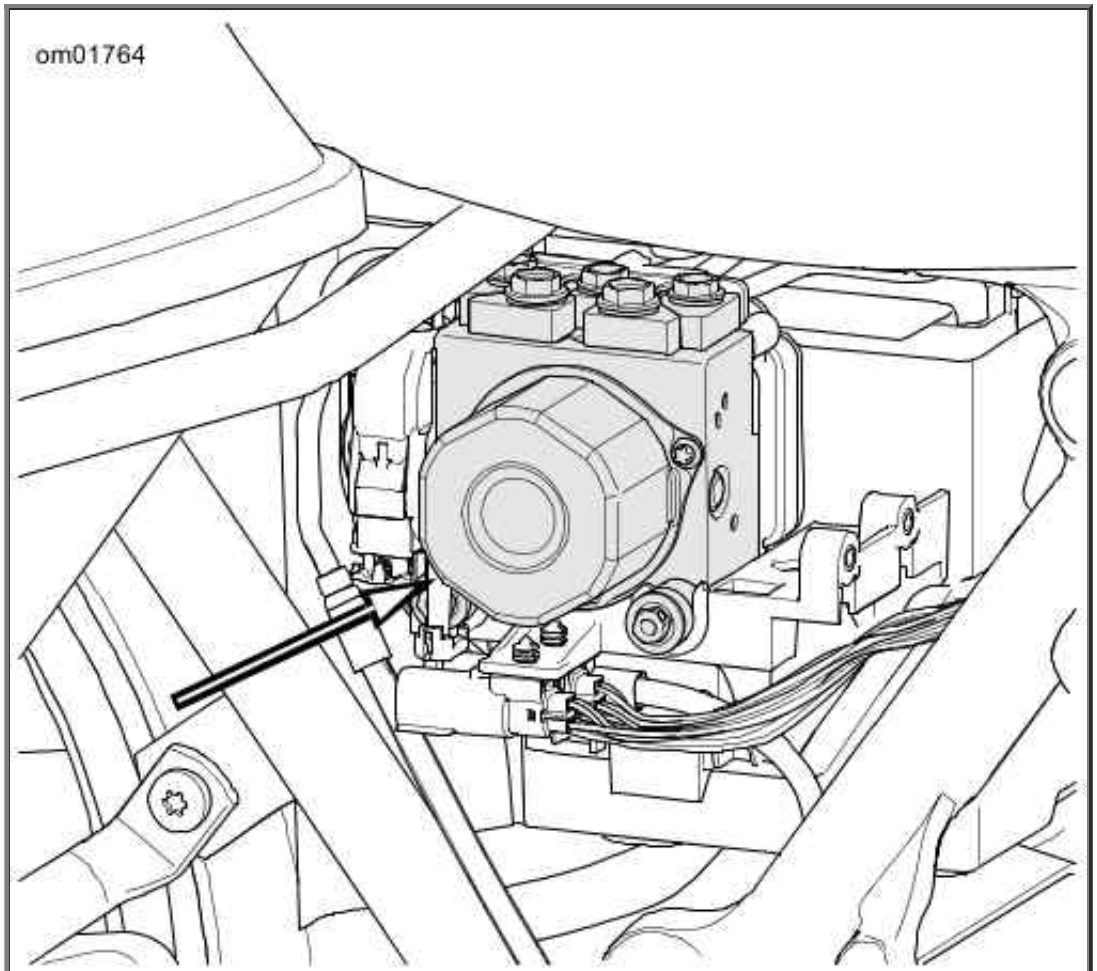

ABS Module (EHCU) (behind right side cover)

Reflex Linked ABS Operation

Reflex Linked ABS is more responsive than conventional ABS and allows for more balanced front and rear braking under a wide variety of brake applications.

At speeds greater than 20-25 mph 32-40 km/h , the system dynamically adjusts the linking for the amount of brake applied as well as vehicle speed to achieve an optimized brake balance. The system provides more linking when the rider is applying heavier braking and reduces or eliminates linking for light braking and low speeds.

NOTE:

When applying both brakes, the rider may detect slight feedback in the front brake lever or rear brake pedal while the dynamic balancing occurs.

When linked, applying the front brake lever alone causes the system to also dynamically apply an amount of braking to the rear. Applying the rear brake pedal alone causes the system to also apply an amount of braking to the left front caliper. When applying both brakes, the system attempts to dynamically

balance braking across both the front and rear wheels.

At speeds less than 20-25 mph 32-40 km/h , the brakes are not linked so that low speed maneuverability is not adversely affected, such as when riding the motorcycle in a parking lot.

Brake System

Front Brake Lever

⚠WARNING

Do not position fingers between hand control lever and handlebar grip. Improper hand positioning can impair control lever operation and cause loss of vehicle control, which could result in death or serious injury. (00032a)

See Brake Controls. The front brake hand lever (1) controls the front wheel brake and is located on the right handlebar. Operate the hand lever with the fingers of the right hand.

Rear Brake Pedal

See Brake Controls. The rear brake pedal (2) controls the rear wheel brake and is located on the right side. Operate the rear brake pedal with the right foot.

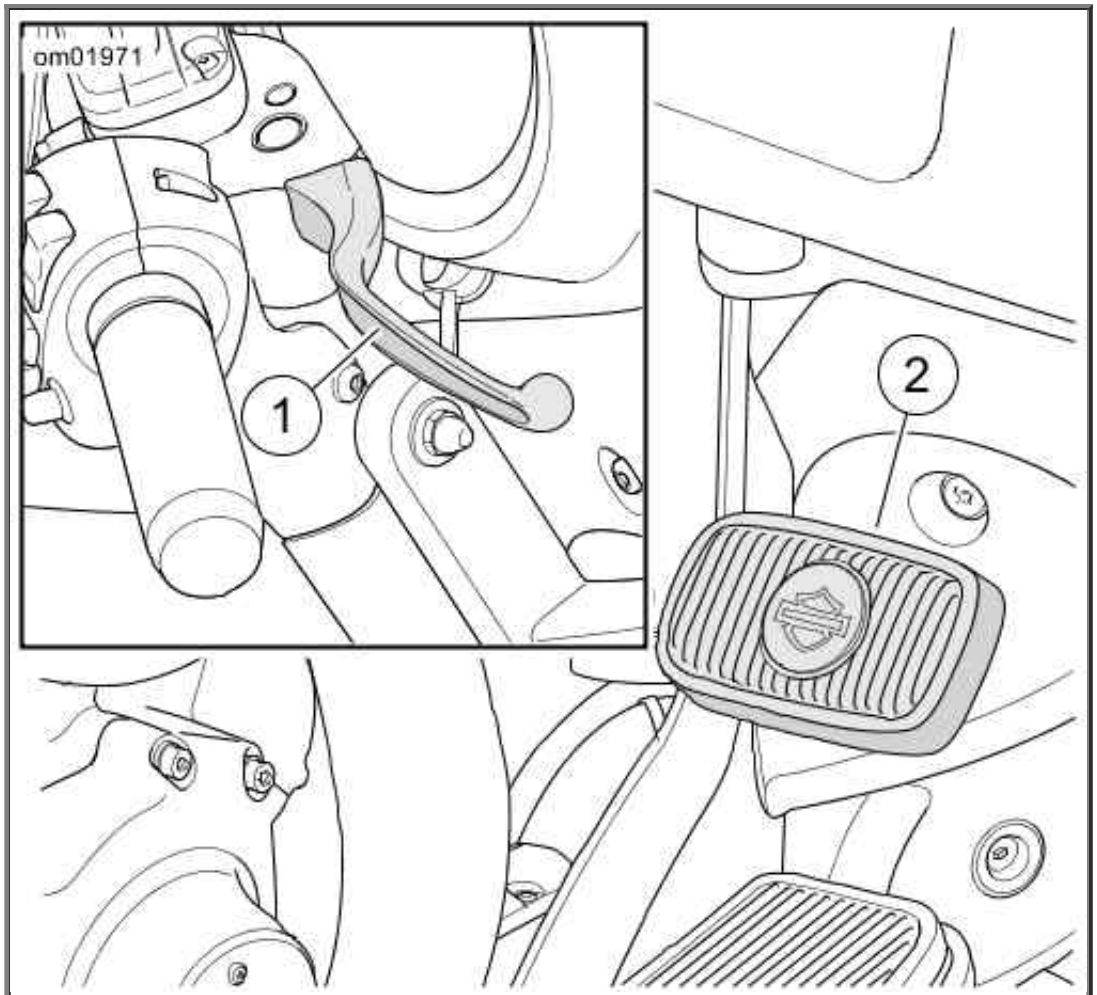

1. Front brake hand lever
2. Rear brake pedal

Brake Controls

Non-ABS Brake System

Apply brakes uniformly and evenly to prevent wheels from locking. Use front and rear brakes equally for best results.

⚠WARNING

Do not apply brake strongly enough to lock the wheel. A locked wheel will skid and can cause

loss of vehicle control, which could result in death or serious injury. (00053a)

Anti-lock Brake System (ABS)

Harley-Davidson's anti-lock brake system assists the rider in maintaining control when braking in a straight-line emergency situation. ABS operates independently on front and rear brakes to keep the wheels rolling and prevent uncontrolled wheel lock-ups either on dry pavement or on slick surfaces such as gravel, leaves or when riding in wet conditions.

How ABS Works

The ABS monitors sensors at the front and rear wheels to determine wheel speed. If the system detects one or both wheels are slowing down too quickly, which indicates they are close to locking, the ABS reacts. If the deceleration rate does not match a criteria stored in memory, the ABS also reacts. The system rapidly opens and closes valves to modulate the brake caliper pressure utilizing only the brake lever/pedal pressure being applied by the rider. During ABS activation, the system provides the electronic equivalent of manually pumping the brakes. ABS is capable of cycling up to seven times per second.

The rider will recognize ABS activation by the slight pulsing sensation in the hand lever or the rear brake pedal. The pulsing sensation may also be accompanied by a clicking sound from the ABS module. Both are the result of normal operation. Refer to ABS Symptoms and Conditions.

How To Use ABS

While an advantage in emergency braking, ABS is not a substitute for safe riding. The safest way to stop a motorcycle is upright with both wheels straight.

Harley-Davidson ABS is a manual assist system. When stopping in an emergency stopping situation, maintain pressure on the brakes through all ABS events. Do not modulate or "pump" the brake controls. The wheels will not lock until the end of the stop when motorcycle speed reaches approximately 4 mph 6 km/h and ABS is no longer needed.

⚠WARNING

ABS cannot prevent lockup of rear wheel due to engine braking. ABS will not aid in cornering or on loose/uneven surfaces. A locked wheel will skid and can cause loss of vehicle control, which could result in death or serious injury. (00362a)

ABS: Tires and Wheels

ABS motorcycles must always use Harley-Davidson specified tires and wheels. The ABS monitors the rotational speed of the wheels through individual wheel speed sensors. Changing to different diameter wheels or different-sized tires can alter the rotational speed. This can upset the calibration of the ABS and have an adverse effect on its ability to detect and prevent uncontrolled wheel lockups. Operating at tire pressures other than those specified in Specified Tires can reduce ABS braking performance.

ABS Symptoms and Conditions

SYMPTOM	CONDITION

SYMPTOM	CONDITION
ABS lamp continuously lit	ABS malfunction detected. See a Harley-Davidson dealer for service.
ABS lamp flashing	This indicates a normal self-diagnostics process when the motorcycle is first turned on and the speed is under 3 mph 5 km/h . ABS is not operational until the lamp turns off. If the lamp continues flashing at speeds greater than 3 mph 5 km/h , see a Harley-Davidson dealer for service.
Pulsing brake lever or pedal during an ABS event	Normal condition.
Clicking sound during an ABS event	Normal condition.
"Surge" sensation while braking	Normal condition. This is most noticeable when braking with one brake (front only or rear only). Result of a reduction in deceleration which can be caused by cracks or bumps in road, engine braking (high engine RPMs causing the rear wheel to slow down), hard braking at slow speeds, and other conditions. This is due to ABS modulating caliper brake pressure to prevent uncontrolled wheel lock.
Temporarily stiff rear brake pedal	Normal condition. Engine braking (high engine RPMs causing the rear wheel to slow down) or down shifting can activate ABS. If applying the rear brake at the same time or immediately after, the ABS may be closing a valve to prevent pressure to the rear brake. This is due to ABS modulating caliper brake pressure to prevent uncontrolled wheel lock.
Tire chirp	Normal condition. Depending on surface, tire can chirp without locking the wheel.
Black mark on pavement	Normal condition. Depending on surface, tire can leave a black mark without locking the wheel.
Wheel lock at low speed	Normal condition. ABS does not activate on front wheel below 3 mph 5 km/h or on rear wheel below 5 mph 8 km/h .

Passenger Footboards: FLHR, FLHRC, FLHTCU, FLHTCU TC, FLHTK, FLTRU

Height Adjustment

See Passenger Footboard: FLHR, FLHRC, FLHTCU, FLHTCU TC, FLHTK, FLTRU. The passenger footboards are adjustable up or down to one of three positions.

NOTES:

- *Remove plastic plugs from holes in the frame footboard mount (3) as necessary.*
- *If the bracket (4) does not slide up or down, loosen but do not remove the lower shoulder bolt (5).*

1. Remove screw (1) and lockwasher (2) from top of bracket.
2. Slide the bracket to the desired position.
3. Install the screw and lockwasher. Tighten to 36-42 ft-lbs (49-56 Nm).
4. If loosened, tighten the lower shoulder bolt. Tighten to 48-72 in-lbs (5.4-8.1 Nm).

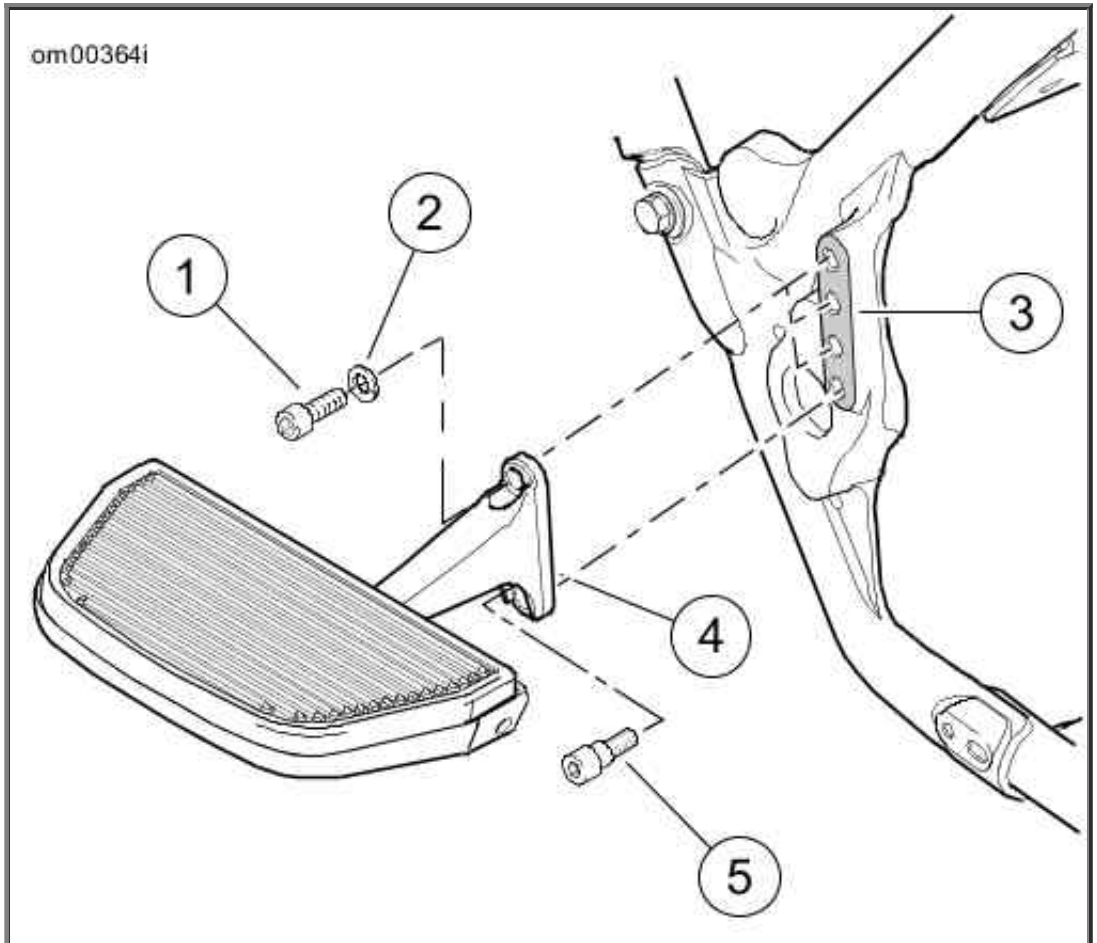

1. Screw
2. Lockwasher
3. Footboard mount
4. Bracket
5. Lower shoulder bolt

Passenger Footboard: FLHR, FLHRC, FLHTCU, FLHTCU TC, FLHTK, FLTRU

Passenger Footboards: FLHTKL, FLHTCUL, FLHTCUL TC

The passenger footboards can be raised or lowered and angled for passenger comfort.

Height Adjustment

NOTE:

See Passenger Footboards: FLHTKL, FLHTCUL, FLHTCUL TC. If the bracket does not slide up or down, loosen but do not remove the lower shoulder bolt (4).

1. Remove the upper bracket screw (1), and washer (2).
2. Select one of the three height positions.

   NOTE:

   If necessary, remove any plastic plugs in the frame mounting holes (3).

3. Slide the bracket and footboard assembly to the selected mounting hole.
4. Install the upper bracket screw and washer. Tighten to 36-42 ft-lbs (48.8-56.9 Nm).
5. If loosened, tighten the lower shoulder screw. Tighten to 48-72 in-lbs (5.4-8.1 Nm).

Angle Adjustment

---

1. See Passenger Footboards: FLHTKL, FLHTCUL, FLHTCUL TC. Remove the end screw (5).
2. Pull the footboard off the mount.
3. Align the splines in the footboard to the mount splines (6) at your preferred angle. Press the footboard over the splines.
4. Apply LOCTITE 243 MEDIUM STRENGTH THREADLOCKER AND SEALANT (blue). Install the screw. Tighten to 15-20 ft-lbs (20.3-27.1 Nm).

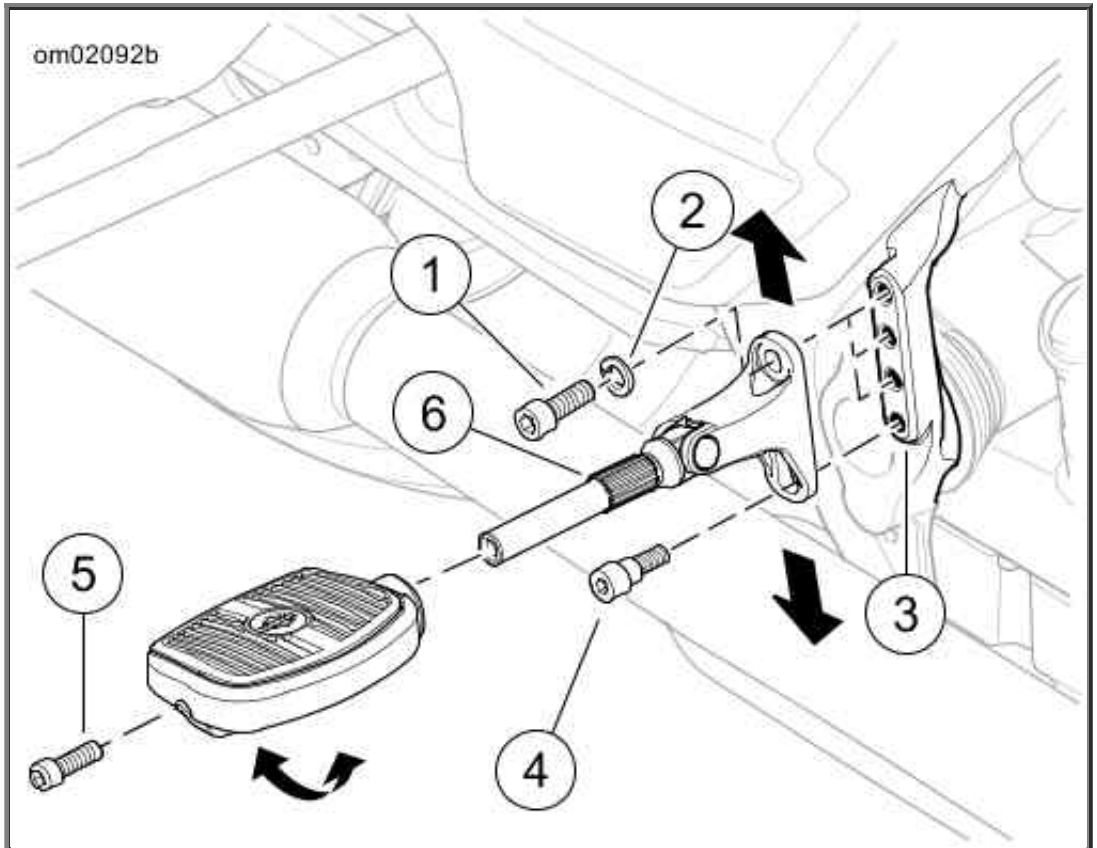

1. Screw
2. Washer
3. Mounting holes
4. Shoulder bolt
5. End screw
6. Splines

Passenger Footboards: FLHTKL, FLHTCUL, FLHTCUL TC

Passenger Footrests: FLHX, FLHXS, FLTRX, FLTRXS

The passenger footrests are adjustable up or down to one of three positions. The footrests can also be angled for passenger comfort.

Height Adjustment

NOTE:

See Passenger Footrest: FLHX, FLHXS, FLTRX, FLTRXS. If the bracket does not slide up or down, loosen but do not remove the lower shoulder bolt (5).

1. Remove the upper bracket screw (1) and lockwasher (2).
2. Select one of the three height positions.

   NOTE:

   If necessary, remove any plastic plugs in the frame mounting holes (3).
3. Slide the bracket and footboard assembly to the selected mounting hole.
4. Install the upper bracket screw and washer. Tighten to 36-42 ft-lbs (48.8-56.9 Nm).
5. If loosened, tighten the lower shoulder screw. Tighten to 48-72 in-lbs (5.4-8.1 Nm).

Angle Adjustment

---

1. See Passenger Footrest: FLHX, FLHXS, FLTRX, FLTRXS. Loosen the end screw (6).
2. Rotate as desired.
3. Apply LOCTITE 243 MEDIUM STRENGTH THREADLOCKER AND SEALANT (blue) to the end screw. Tighten to 15-20 ft-lbs (20.3-27.1 Nm).

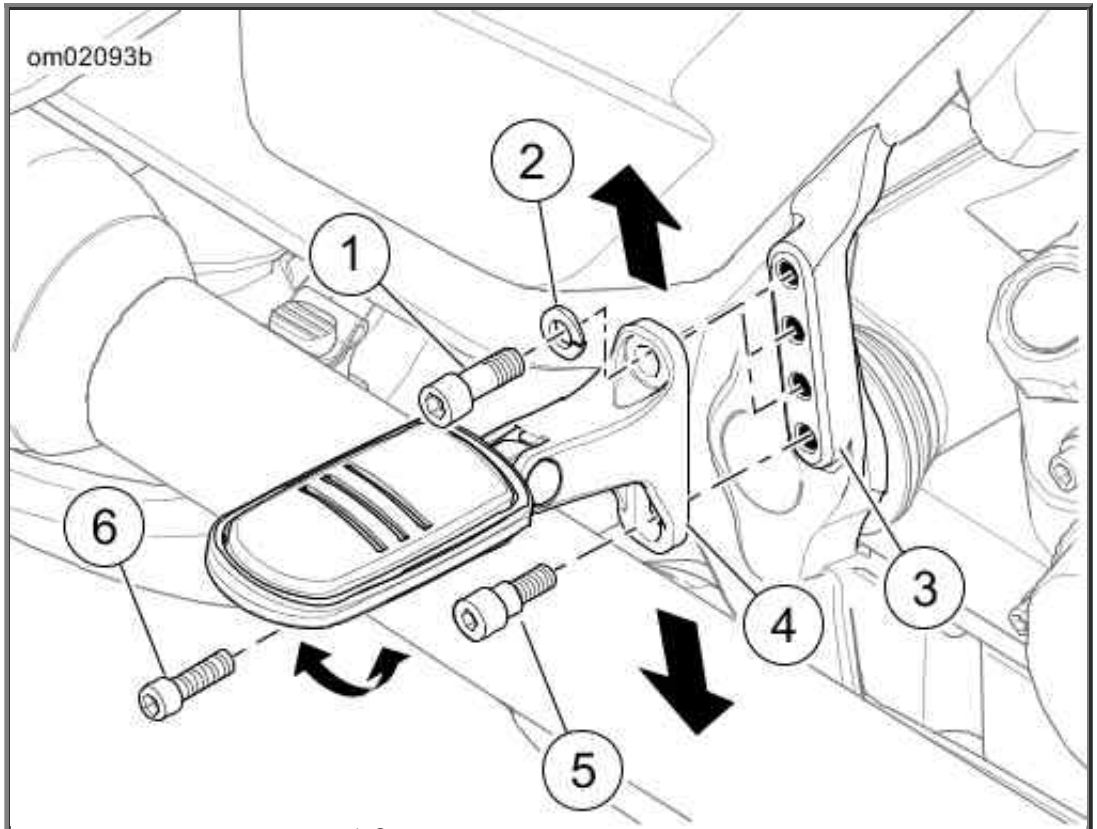

1. Screw
2. Lockwasher
3. Frame mounting holes
4. Pin
5. Shoulder bolt
6. End screw

Passenger Footrest: FLHX, FLHXS, FLTRX, FLTRXS

Jiffy Stand

WARNING

Always park motorcycle on a level, firm surface. An unbalanced motorcycle can fall over, which could result in death or serious injury. (00039a)

The jiffy stand is located on the left side of the motorcycle. The stand swings outward to support the motorcycle for parking.

⚠WARNING

The jiffy stand locks when placed in the full forward (down) position with vehicle weight on it. If the jiffy stand is not in the full forward (down) position with vehicle weight on it, the vehicle can fall over which could result in death or serious injury. (00006a)

⚠WARNING

Be sure jiffy stand is fully retracted before riding. If jiffy stand is not fully retracted, it can contact the road surface causing a loss of vehicle control, which could result in death or serious injury. (00007a)

Jiffy Stand Interlock: International Models

Some international models have a jiffy stand interlock.

If the transmission is in neutral, the motorcycle will start and run. If the jiffy stand is down and the transmission in gear, engaging the clutch stalls the motorcycle. The message "SidEStAnd" scrolls across the odometer. Raising the jiffy stand or putting the transmission in neutral will permit the engine to run. The odometer will clear the message.

If the stand lowers at a speed greater than 10 mph 15 km/h , the engine will continue to run. The indicators will flash twice. The message "SidEStAnd" will scroll across the odometer. The message remains until the system detects the jiffy stand in the fully retracted position again. The rider can continue to ride while in this mode.

The rider can clear the text messages at any time by pressing the TRIP/trigger switch once while the vehicle is powered up.

Fuel Filler Cap

See Safe Operating Rules and review the following safety procedures.

⚠WARNING

Avoid spills. Slowly remove filler cap. Do not fill above bottom of filler neck insert, leaving air space for fuel expansion. Secure filler cap after refueling. Gasoline is extremely flammable and highly explosive, which could result in death or serious injury. (00028a)

⚠WARNING

Do not store motorcycle with gasoline in tank within the home or garage where open flames, pilot lights, sparks or electric motors are present. Gasoline is extremely flammable and highly explosive, which could result in death or serious injury. (00003a)

⚠WARNING

Do not use aftermarket fuel caps. Aftermarket fuel caps may fit improperly and leak, which could lead to death or serious injury. See a Harley-Davidson dealer for approved fuel caps. (00034a)

CAUTION

Do not spill fuel onto the motorcycle while refueling. Immediately wipe up fuel spills on your motorcycle. Fuel can cause damage to cosmetic surfaces. (00147b)

CAUTION

Use only unleaded fuel in catalytic converter-equipped motorcycles. Using leaded fuel will damage the emission control system. (00150b)

FLHR, FLHRC

See Fuel Tank: FLHR, FLHRC. The fuel filler cap is on the right side of the fuel tank. Some vehicles have a locking fuel cap.

The cap on the left side is the fuel gauge. The fuel gauge is not removable.

Other Models

The fuel filler cap is beneath a pushbutton or locking door on the fuel tank.

Pushbutton fuel door: See Pushbutton Fuel Door. Push button to release the door.

Locking fuel door: See Locking Fuel Door. Unlock fuel door with the ignition key. Lock fuel door by removing key and closing fuel door.

Fuel Filler Cap

Remove: Turn fuel filler cap counterclockwise to remove.

Install: Turn fuel filler cap clockwise until it clicks. The ratchet action of the cap prevents over-tightening.

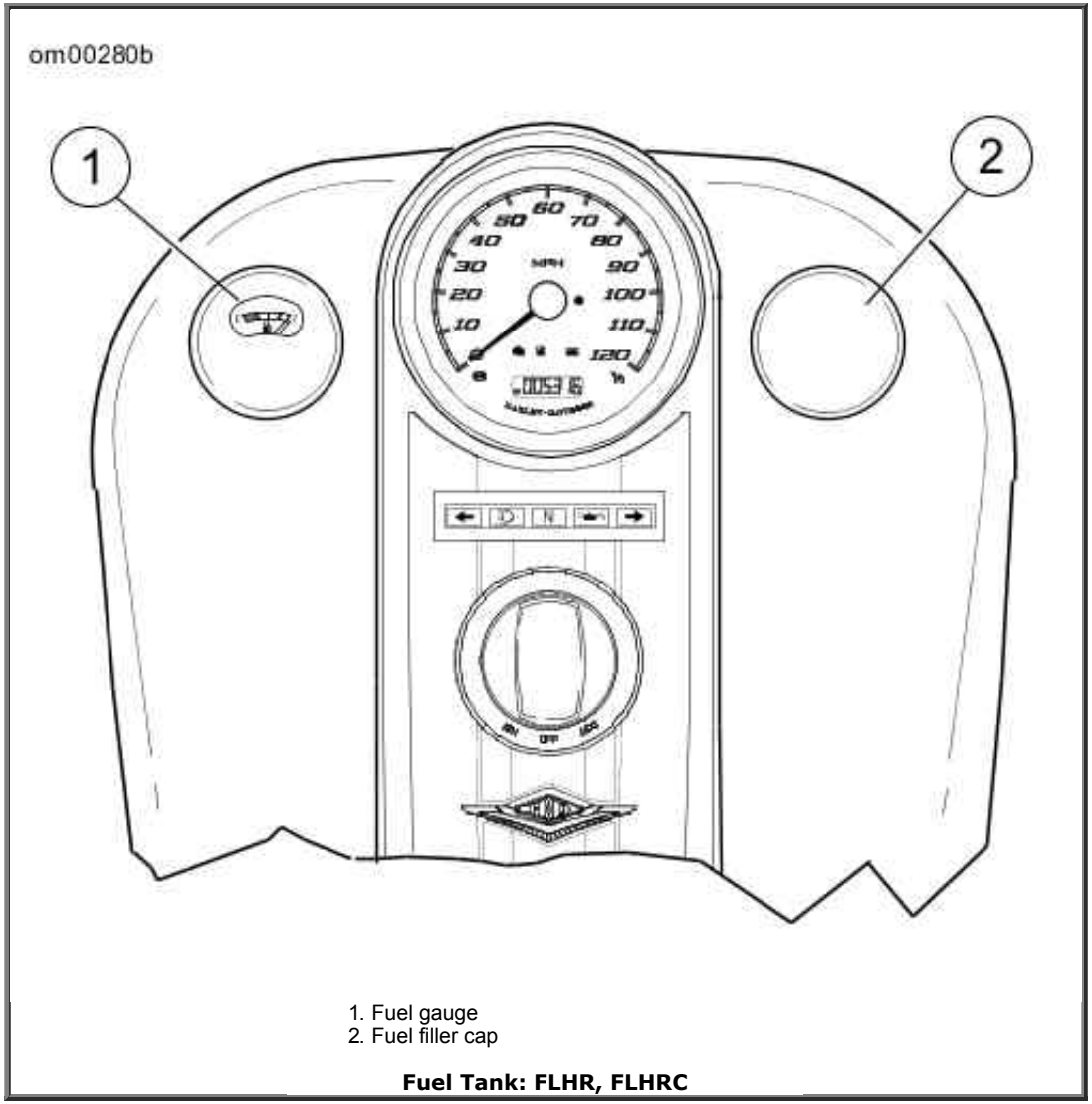

1. Fuel gauge
2. Fuel filler cap

Fuel Tank: FLHR, FLHRC

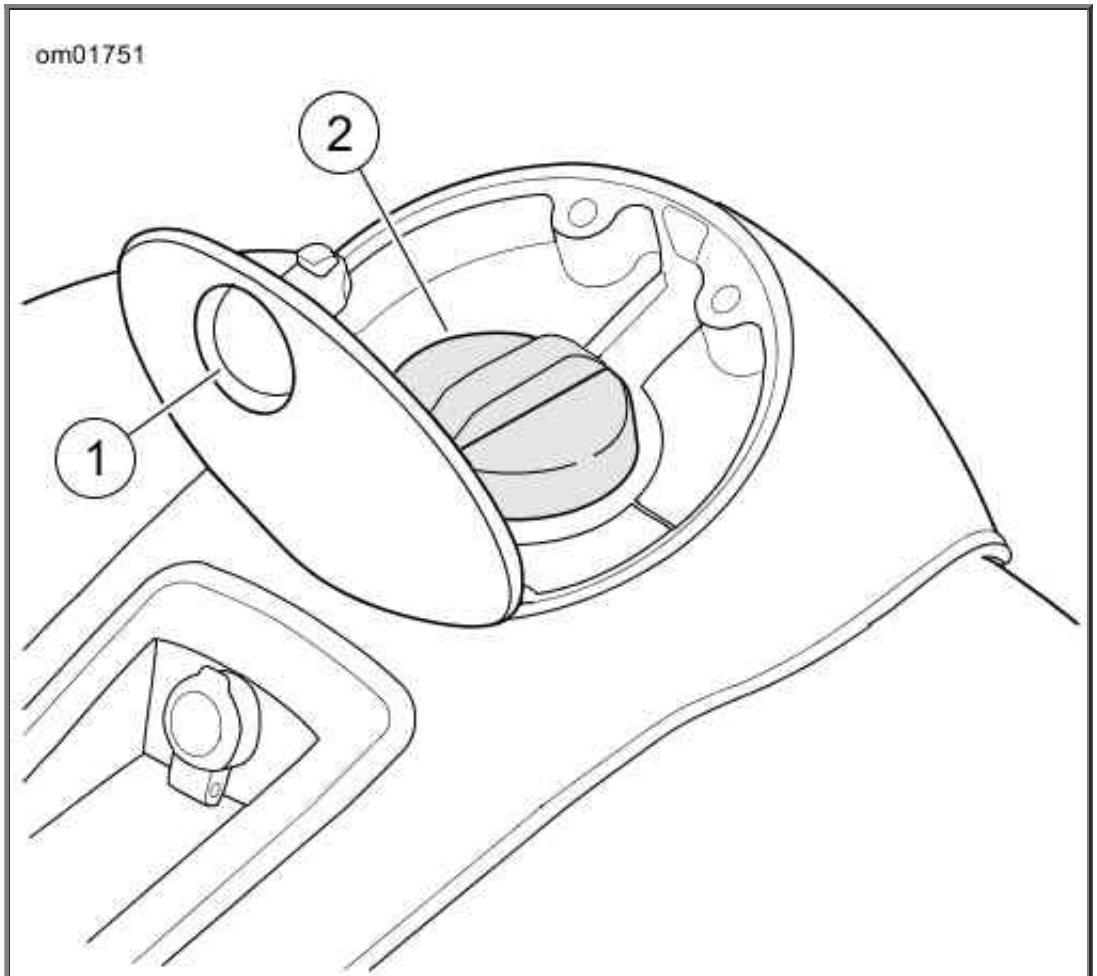

1. Pushbutton
2. Fuel cap

Pushbutton Fuel Door

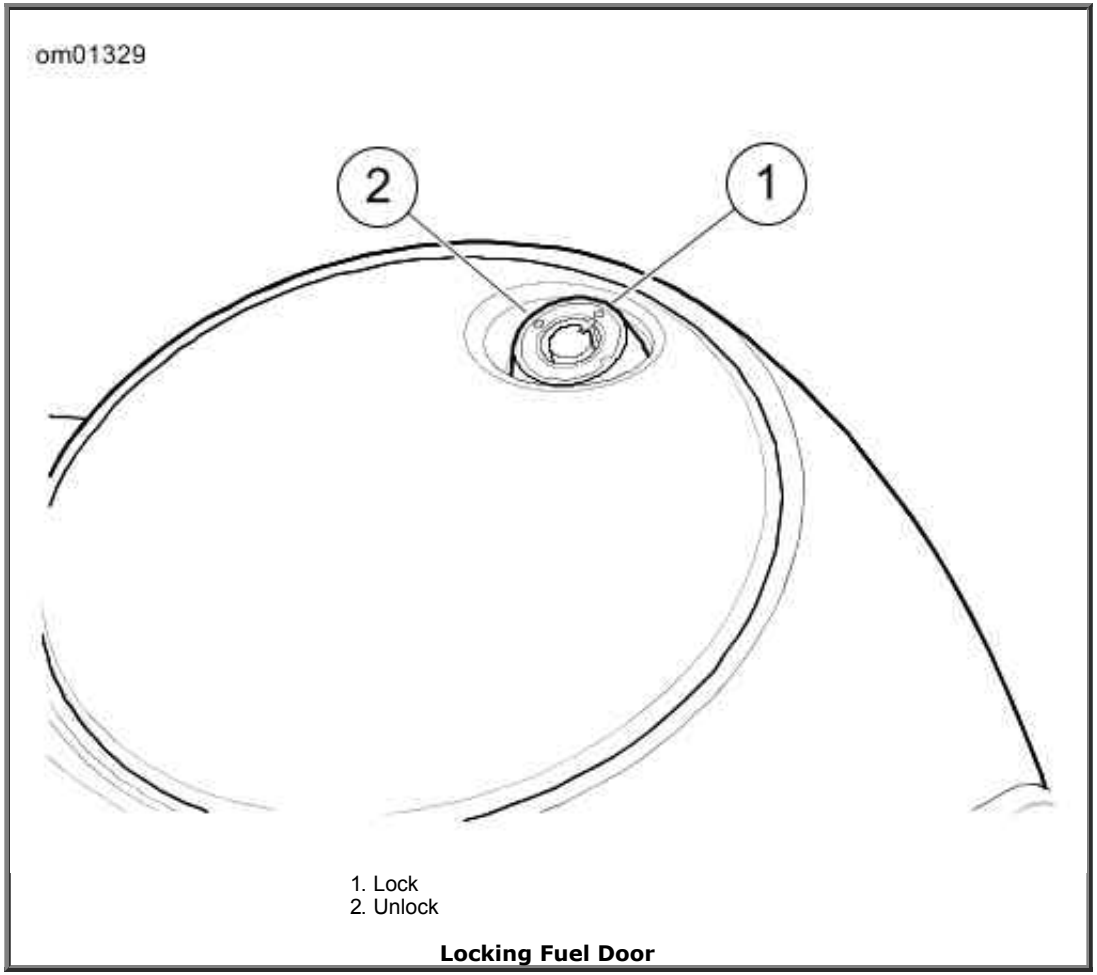

Locking Fuel Door

Rear View Mirrors

WARNING

Objects in mirrors are closer than they appear. Use caution when judging distance of objects in mirrors. Failure to judge correct distances could result in death or serious injury. (00033a)

Your motorcycle has two convex rear view mirrors.

This type of mirror is designed to give a much wider view to the rear than a flat mirror. However, cars and other objects seen in this type of mirror look smaller and farther away than they actually are.

- Use caution when judging the size or relative distance of objects seen in rear view mirrors.
- Always adjust the rear view mirrors to reflect the area behind the motorcycle before riding.

NOTE:

Adjust mirrors so you can see a small portion of your shoulders in each mirror. This will help you establish the relative distance of vehicles to the rear of your motorcycle.

Rear Suspension

WARNING

Do not exceed the motorcycle's Gross Vehicle Weight Rating (GVWR) or Gross Axle Weight Rating (GAWR). Exceeding these weight ratings can lead to component failure and adversely affect stability, handling and performance, which could result in death or serious injury. (00016f)

Adjust suspension to suit load conditions, riding style and personal comfort. Increase preload to accommodate the total load. Reduce the preload if carrying less weight. Do not exceed maximum GVWR or GAWR when loading.

Air suspension models: See Air Shock Adjustment.

Manual suspension models: See Manual Suspension Preload Adjustment.

Manual Suspension Preload Adjustment

1. Remove the left saddlebag. See Saddlebags: All except FLHRC.
2. See Preload Adjustment Knob. Rotate the preload adjustment knob counterclockwise until it stops. The stopped position is the minimum preload.
3. Rotate the preload adjustment knob clockwise the recommended number of turns to increase the preload for the total weight of the rider, passenger and cargo. The knob clicks at each half turn. Refer to Manual Suspension Preload Table: Models with Tour-Pak (models with Tour-Pak) or Manual Suspension Preload Table: Models without Tour-Pak (models without Tour-Pak).
4. Turn the knob half turns to fine-tune the ride if desired.
5. Install the left saddlebag.

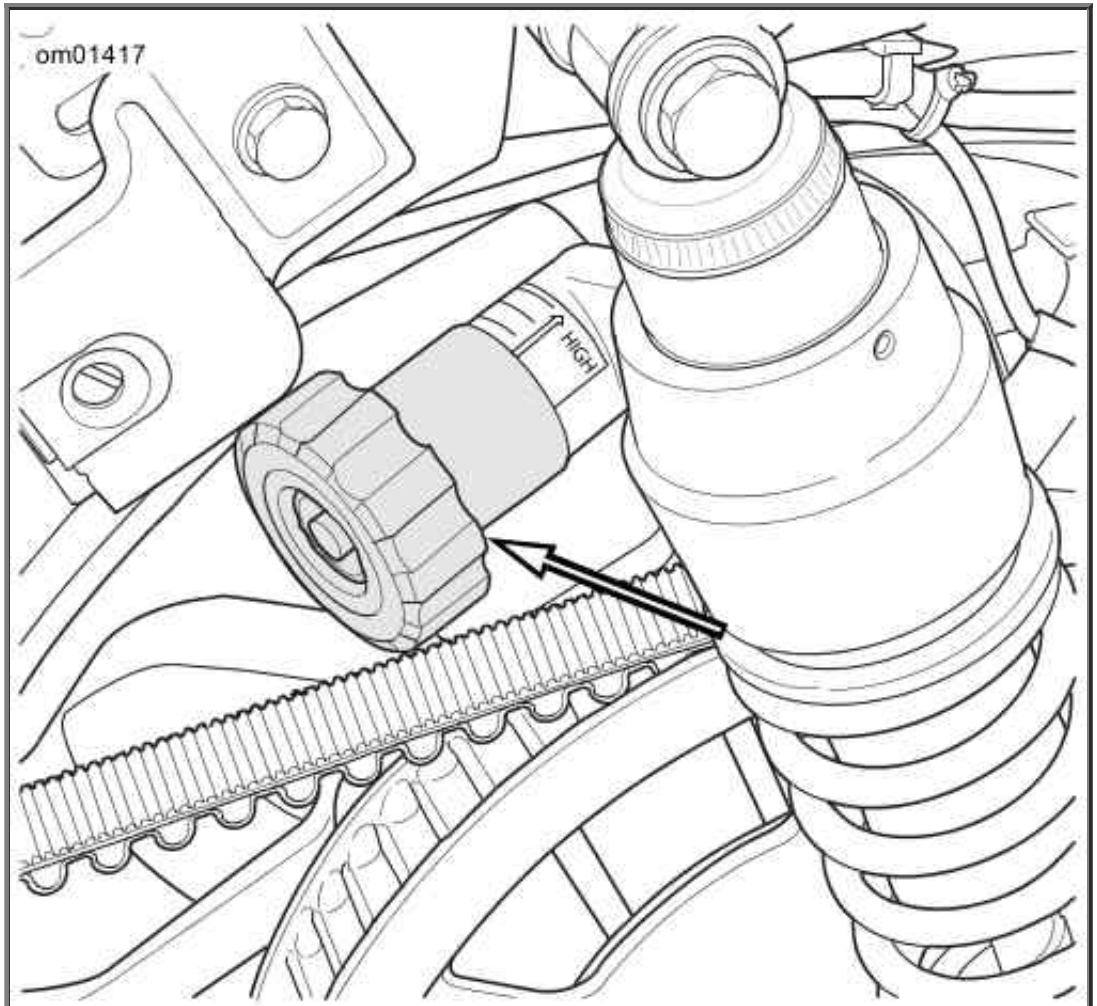

Preload Adjustment Knob

Manual Suspension Preload Table: Models with Tour-Pak

		ADDITIONAL WEIGHT OF PASSENGER, CARGO AND ACCESSORIES																				
	lb	0	8	16	24	32	40	48	56	64	72	80	88	96	104	112	120	128	136	144	152	160
	kg	0	3.6	7.3	10.9	14.5	18.1	21.8	25.4	29.0	32.7	36.3	39.9	43.5	47.2	50.8	54.4	58.1	61.7	65.3	68.9	72.6
RIDER WEIGHT																						
lb	kg	Full Turns of Knob																				
150	68	0	1	2	3	4	5	6	7	8	9	10	11	12	13	14	15	16	17	18	HIGH	
160	72.6	1	2	3	4	5	6	7	8	9	10	11	12	13	14	15	16	17	18	HIGH		
170	77.1	2	3	4	5	6	7	8	9	10	11	12	13	14	15	16	17	18	HIGH			
180	81.6	3	4	5	6	7	8	9	10	11	12	13	14	15	16	17	18	HIGH				

190	86.2		4	5	6	7	8	9	10	11	12	13	14	15	16	17	18	HIGH	
210	95.3		5	6	7	8	9	10	11	12	13	14	14	16	17	18	HIGH		
220	99.8		6	7	8	9	10	11	12	13	14	15	16	17	18	HIGH			
230	104.3		7	8	9	10	11	12	13	14	15	16	17	18	HIGH				
240	108.9		8	9	10	11	12	13	14	15	16	17	18	HIGH					
250	113.4		9	10	11	12	13	14	15	16	17	18	HIGH						
260	117.9		10	11	12	13	14	15	16	17	18	HIGH							
270	122.5		11	12	13	14	15	16	17	18	HIGH								

Manual Suspension Preload Table: Models without Tour-Pak

			ADDITIONAL WEIGHT OF PASSENGER, CARGO AND ACCESSORIES																				
		lb	0	8	16	24	32	40	48	56	64	72	80	88	96	104	112	120	128	136	144	152	160
		kg	0	3.6	7.3	10.9	14.5	18.1	21.8	25.4	29.0	32.7	36.3	39.9	43.5	47.2	50.8	54.4	58.1	61.7	65.3	68.9	72.6
RIDER WEIGHT																							
lb	kg		Full Turns of Knob																				
150	68		0	0	0	0	0	0	0	0	1	2	3	4	5	6	7	8	9	10	11	12	13
160	72.6		0	0	0	0	0	0	0	1	2	3	4	5	6	7	8	9	10	11	12	13	14
170	77.1		0	0	0	0	0	0	1	2	3	4	5	6	7	8	9	10	11	12	13	14	15
180	81.6		0	0	0	0	0	1	2	3	4	5	6	7	8	9	10	11	12	13	14	15	16
190	86.2		0	0	0	0	1	2	3	4	5	6	7	8	9	10	11	12	13	14	15	16	17
210	95.3		0	0	0	1	2	3	4	5	6	7	8	9	10	11	12	13	14	15	16	17	18
220	99.8		0	0	1	2	3	4	5	6	7	8	9	10	11	12	13	14	15	16	17	18	HIGH
230	104.3		0	1	2	3	4	5	6	7	8	9	10	11	12	13	14	15	16	17	18	HIGH	
240	108.9		1	2	3	4	5	6	7	8	9	10	11	12	13	14	15	16	17	18	HIGH		
250	113.4		2	3	4	5	6	7	8	9	10	11	12	13	14	15	16	17	18	HIGH			
260	117.9		3	4	5	6	7	8	9	10	11	12	13	14	15	16	17	18	HIGH				
270	122.5		4	5	6	7	8	9	10	11	12	13	14	15	16	17	18	HIGH					

Air Shock Adjustment

Recommended Pressure

The recommended pressures are starting pressures for the total weight of rider, passenger and luggage. Vary the recommended pressure to suit road conditions, riding style and comfort. Using pressures outside the recommended loading range results in a reduction of available suspension travel and reduced rider comfort and can damage the shock absorbers.

- **Models without Tour-Pak:** Refer to Recommended Suspension Air Pressure: Models Without Tour-Pak*.
- **Models with Tour-Pak:** Refer to Recommended Suspension Air Pressure: Models With Tour-Pak.

Recommended Suspension Air Pressure: Models Without Tour-Pak*

SHOCK LOAD	TOTAL WEIGHT	PRESSURE**	
		psi	kPa
Solo rider	Up to 150 lb 68 kg	0	0
	150-200 lb 68-91 kg	0-10	0-69
	200-250 lb 91-113 kg	10-20	69-138
	250-300 lb 113-136 kg	20-30	138-206
	300 lb 136 kg to maximum added weight allowed***	30-50	206-345
Solo rider with capacity luggage of 40 lbs 18 kg	Up to 150 lb 68 kg	10-20	69-138
	150-200 lb 68-91 kg	20-30	138-206
	200-250 lb 91-113 kg	30-40	206-276
	250-300 lb 113-136 kg	40-50	276-345
	300 lb 136 kg to maximum added weight allowed***	50	345
Rider plus passenger	Any weight up to maximum added weight allowed***	40-50	276-345
Maximum loaded vehicle	Maximum added weight allowed***	50	345

* If an optional Tour-Pak is installed, add 5-10 psi 34-69 kPa to shock pressure.

** Do **not** exceed 50 psi 345 kPa .

*** Refer to Weights: FLHTCU, FLHTCUL, FLHTCU TC, FLHTCUL TC, FLHTK, FLHTKL, FLTRU for maximum added weight allowed.

Recommended Suspension Air Pressure: Models With Tour-Pak

SHOCK LOAD	TOTAL WEIGHT	PRESSURE*	
		psi	kPa
Solo rider	Up to 150 lb 68 kg	5-10	34-69
	150-200 lb 68-91 kg	10-20	69-138
	200-250 lb 91-113 kg	20-30	138-206
	250-300 lb 113-136 kg	30-40	206-276
	300 lb 136 kg to maximum added weight allowed**	40-50	276-345
Solo rider with capacity luggage of 70 lbs 32 kg	Up to 150 lb 68 kg	25-30	172-206
	150-200 lb 68-91 kg	30-40	206-276
	200-250 lb 91-113 kg	40-50	276-345
	250 lb 113 kg to maximum added weight allowed**	50	345

Rider plus passenger	Any weight up to maximum added weight allowed**	50	345
Maximum loaded vehicle	Maximum added weight allowed**	50	345
* Do **not** exceed 50 psi 345 kPa . ** Refer to Weights: FLHR, FLHRC, FLHX, FLHXS, FLTRX, FLTRXS for maximum added weight allowed.			

Adjustment

NOTE:

See Digital Touring Suspension Air Pump. Use a no-loss air pump such as the Digital Touring Suspension Air Pump 54000033 available from a Harley-Davidson dealer. This pump can also be used as a tire air pressure gauge.

1. Press the power button (3) to turn on the display.
2. To switch the display between psi and kPa units, hold the power button five seconds.
3. Open the left saddlebag to access the shock air valve.
4. Remove the cap from the air valve.
5. See Adjusting Shock Air Pressure. Install the pump air valve adapter on the air valve.

⚠WARNING

Use caution when bleeding air from the suspension. Moisture combined with lubricant may leak onto the rear wheel, tire and/or brake components and adversely affect traction, which could result in death or serious injury. (00084a)

CAUTION

Do not exceed maximum air pressure for suspension. Air components fill rapidly. Therefore, use low air line pressure. Failure to do so can result in possible damage to components. (00165b)

NOTES:
- *Before releasing pressure, add 3-5 psi 20.7-34.6 kPa to the existing pressure to prevent oil from exiting the air valve. Never exceed 50 psi 345 kPa .*
- *For best results, press the pressure release button slowly and only partially.*

6. Adjust pressure.
   a. **Release pressure:** Press the pressure release button on the pump.
   b. **Inflate pressure:** See Adjusting Shock Air Pressure. Pull out the handle. Rotate the handle to the T-position. Pump until the display indicates the recommended pressure. Refer to Recommended Suspension Air Pressure: Models Without Tour-Pak* or

Recommended Suspension Air Pressure: Models With Tour-Pak.

7. Install the cap on the air valve. Close saddlebag.

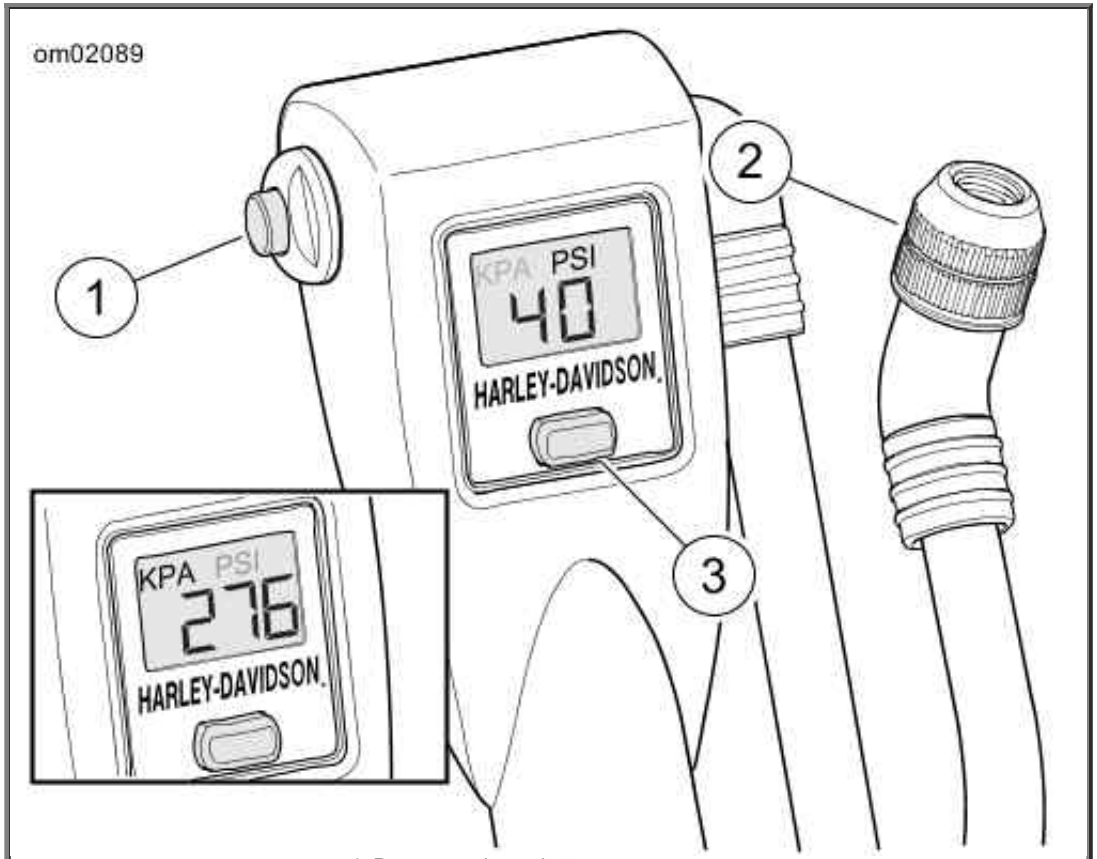

1. Pressure release button
2. Air valve adapter
3. Power button

Digital Touring Suspension Air Pump

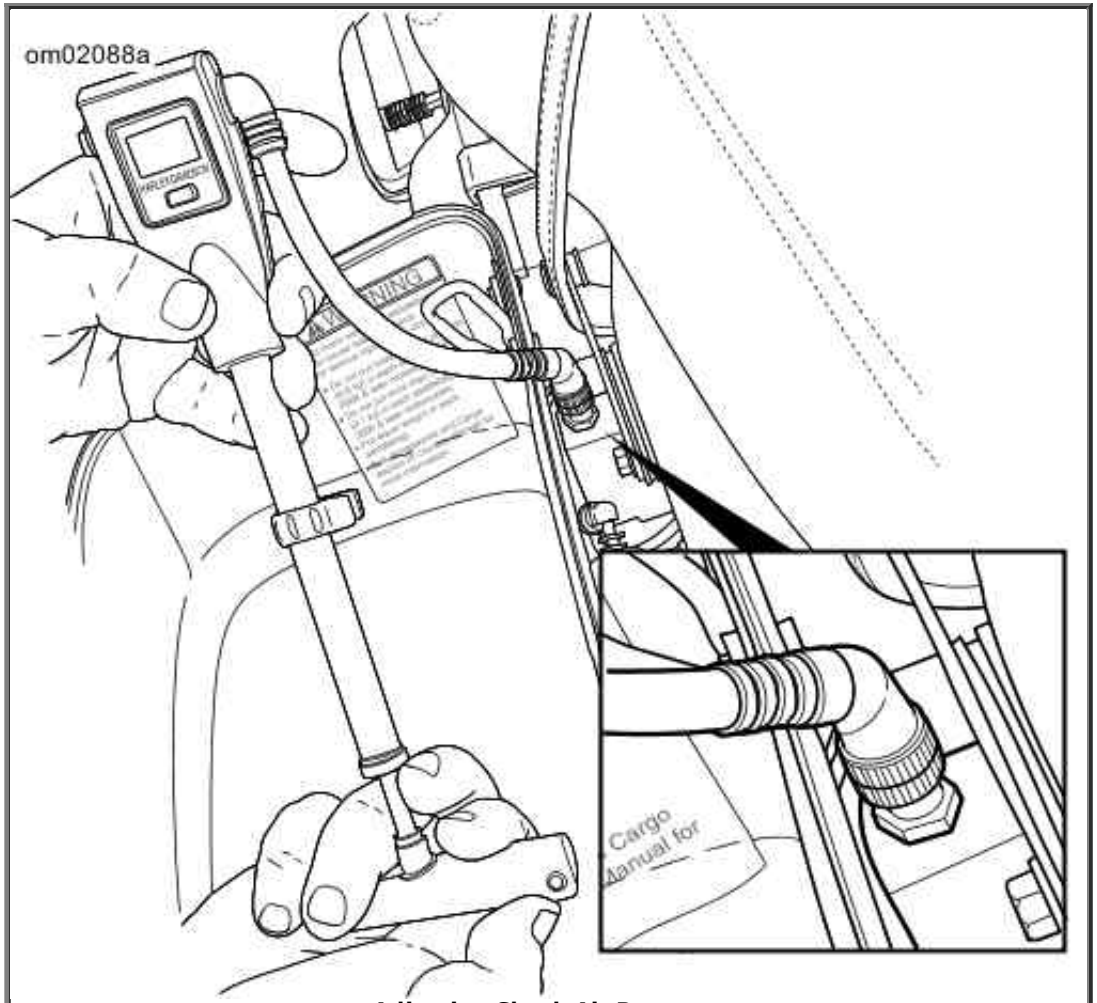

Adjusting Shock Air Pressure

Luggage

⚠WARNING

See the Accessories and Cargo section in your owner's manual. Improper cargo loading or accessory installation can cause component failure and adversely affect stability, handling and performance, which could result in death or serious injury. (00021b)

⚠WARNING

Do not exceed the motorcycle's Gross Vehicle Weight Rating (GVWR) or Gross Axle Weight Rating (GAWR). Exceeding these weight ratings can lead to component failure and adversely affect stability, handling and performance, which could result in death or serious injury. (00016f)

- GVWR is the sum of the weight of the motorcycle, accessories and the maximum weight of the rider, passenger and cargo that can be safely carried.
- GAWR is the maximum amount of weight that can be safely carried on each axle.
- The GVWR and GAWR are shown on the information label which is on the frame downtube in some destinations.

⚠WARNING

Improper loading of cargo or installation of accessories can affect motorcycle stability and handling, which could result in death or serious injury. (00095a)

- Keep cargo weight concentrated close to the motorcycle and as low as possible to minimize the change in the motorcycle's center of gravity. Distribute weight evenly on both sides of the vehicle. Do not load bulky items too far behind the rider or add weight to the handlebars or front forks. Do not exceed maximum load on the label within the luggage.
- Check that cargo is secure and does not shift while riding. Periodically recheck load.
- Close and lock luggage before riding or leaving the vehicle unattended.

Saddlebags: All except FLHRC

⚠WARNING

Do not exceed saddlebag weight capacity. Put equal weight in each bag. Too much weight in saddlebags can cause loss of control, which could result in death or serious injury. (00383a)

NOTE:

Maximum saddlebag weight capacity is 20 lbs 9.1 kg in each saddlebag.

Opening

1. See Saddlebag. Unlock saddlebag lock with the key.
2. Lift the saddlebag lever.
3. Lift the lid from the inner side of the saddlebag.

Closing

1. See Saddlebag. Close the saddlebag lid.
2. Push the lever down to engage the latches. Check that the lid is secure.
3. Lock the saddlebag.

Removing

1. See Saddlebag. Open the saddlebag.
2. See Saddlebag Removal/Installation. Rotate the mounting studs a quarter turn counterclockwise to disengage the saddlebag from the mounting bracket.

   NOTE:

   Some vehicles have mounting studs with a wire form "bail" for easy removal by hand. International models require a flat blade screwdriver.
3. Lift the saddlebag from the saddlebag rail.

NOTES:

- *Do not drag or scrape saddlebags on the ground.*
- *Saddlebags with a curved bottom will not rest upright on the ground. Set saddlebags on a level surface to prevent tipping.*

Installing

1. See Saddlebag Removal/Installation. Carefully place saddlebag in position on saddlebag rail and align the mounting studs with the support bracket.

   NOTE:

   See Mounting Stud Installation (cutaway view). The mounting stud must securely engage the wireform clip.
2. Push in the mounting studs and rotate a quarter turn clockwise to mount the saddlebag to the bracket.
3. Check that the saddlebag is secure on the motorcycle.
4. Close and lock the saddlebag.

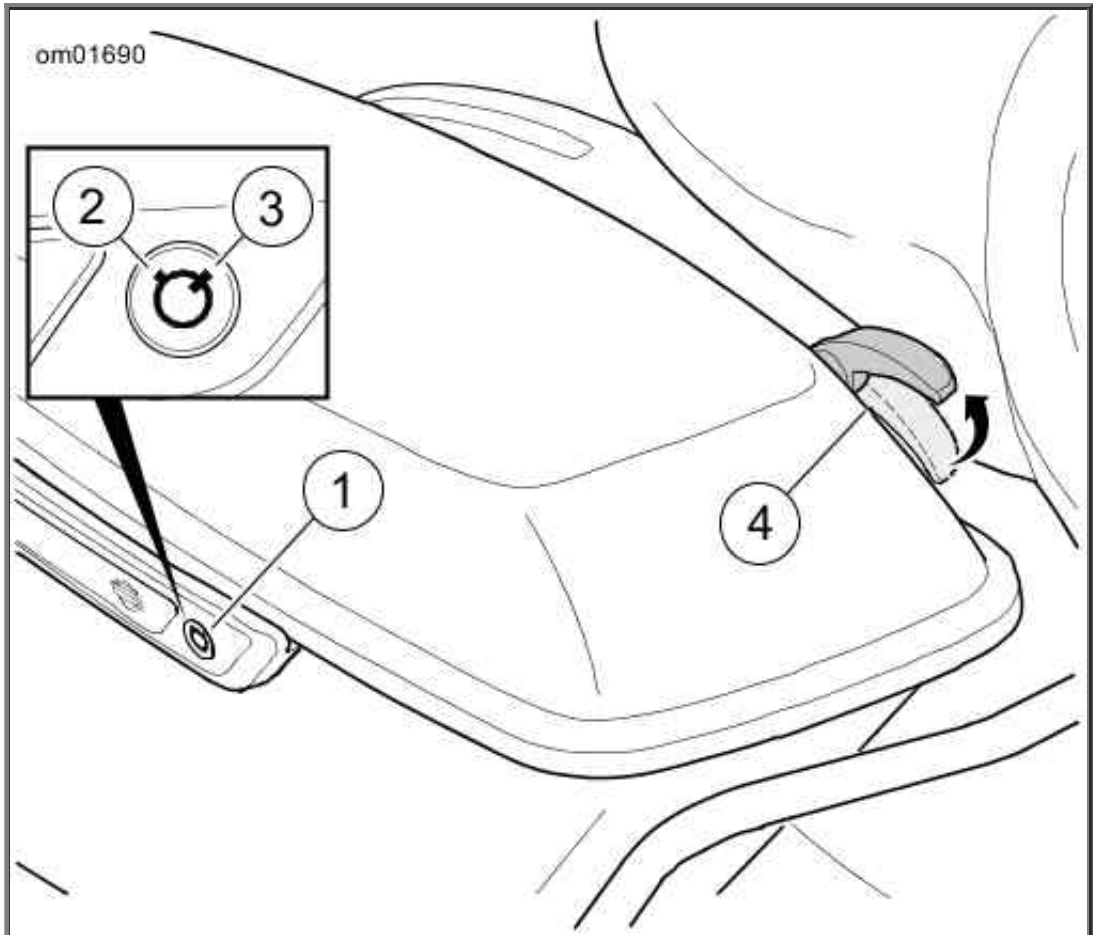

1. Saddlebag lock
2. Unlock position (toward rear of vehicle)
3. Lock position (toward front of vehicle)
4. Lever

Saddlebag

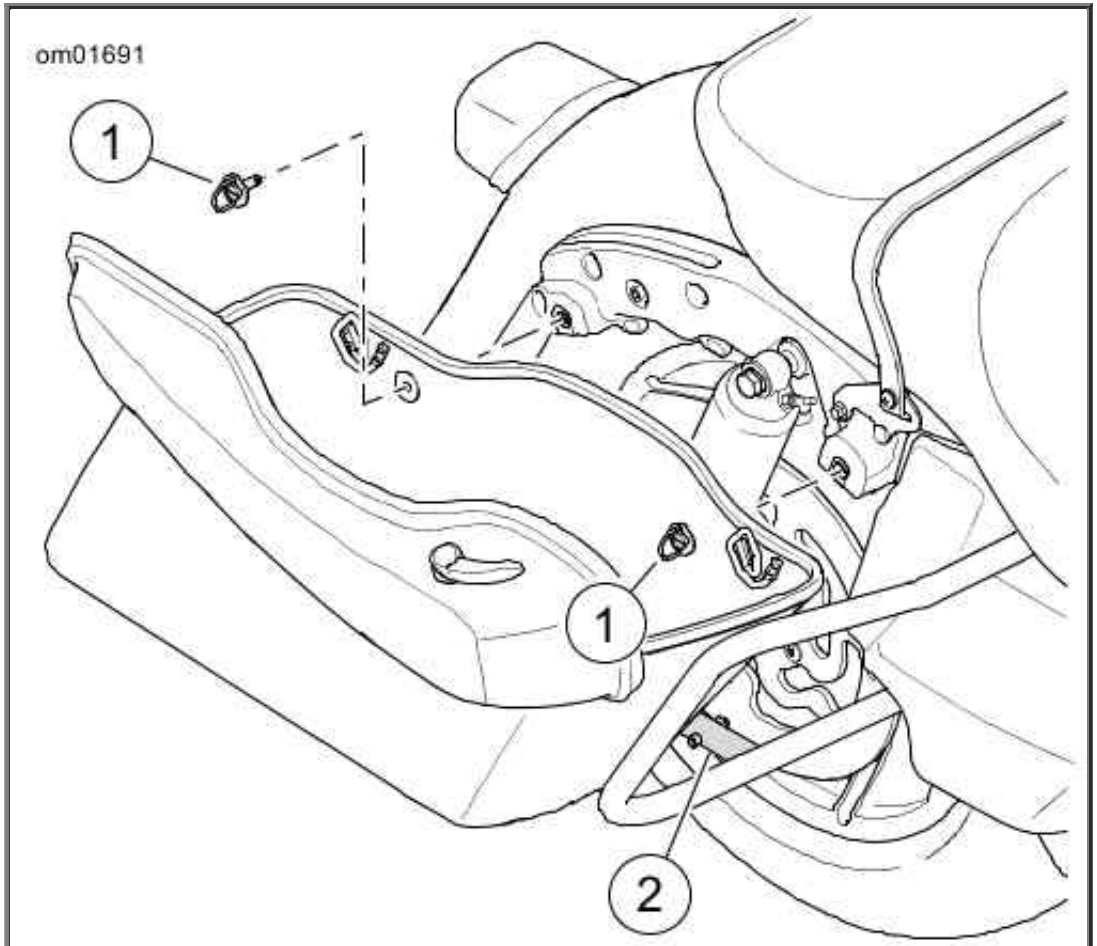

1. Mounting studs
2. Saddlebag rail

Saddlebag Removal/Installation

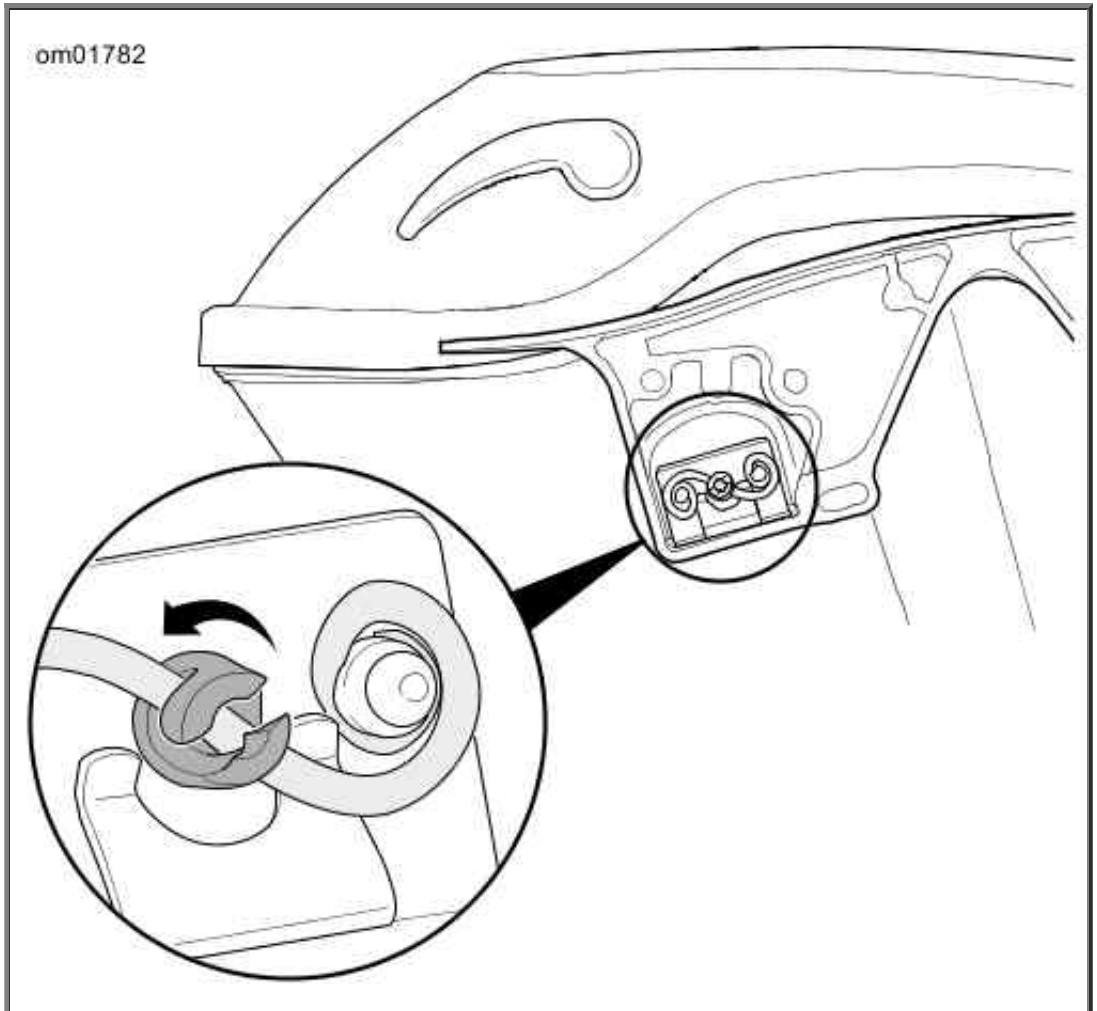

Mounting Stud Installation (cutaway view)

Saddlebags: FLHRC

Opening

See Saddlebag Quick Disconnect. To use the quick disconnect strap feature, lift up the strap end to expose the quick release buckle and press on the lock tabs as shown.

The straps may also be opened and closed using the buckle in a conventional manner.

Closing

Insert the male strap end into the receptacle on the bag and push until a positive "click" is felt.

NOTE:

See Leather and Vinyl Care for proper saddlebag care.

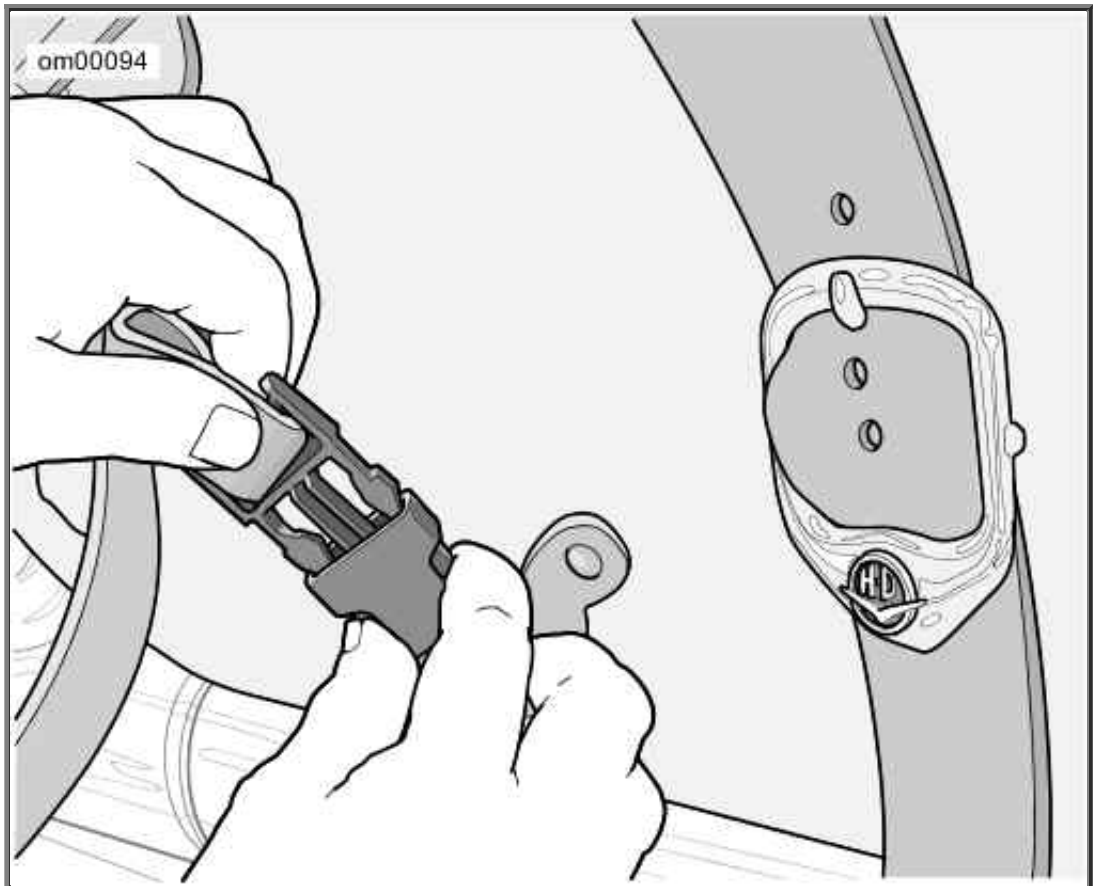

Saddlebag Quick Disconnect

Tour-Pak

WARNING

Do not exceed Tour-Pak weight capacity. Too much weight can cause loss of control, which

could result in death or serious injury. (00401c)

⚠CAUTION

Do NOT pull on any electrical wires. Pulling on electrical wires may damage the internal conductor causing high resistance, which may result in minor or moderate injury. (00168a)

NOTE:

Maximum luggage rack weight capacity is 10 lbs 4.5 kg . Combined load of luggage rack and Tour-Pak must not exceed 30 lbs 13.6 kg .

See Tour-Pak. Some vehicles have a lockable Tour-Pak for storing cargo.

Lock/Unlock: Use the ignition key to lock or unlock the latch handle.

Open: Pull the latch handle. Raise the lid.

Close: Close the lid. Push the latch handle to secure the lid. Lift on lid to check that it is secure.

Some vehicles have a luggage rack. Tie down and secure cargo on the luggage rack before riding.

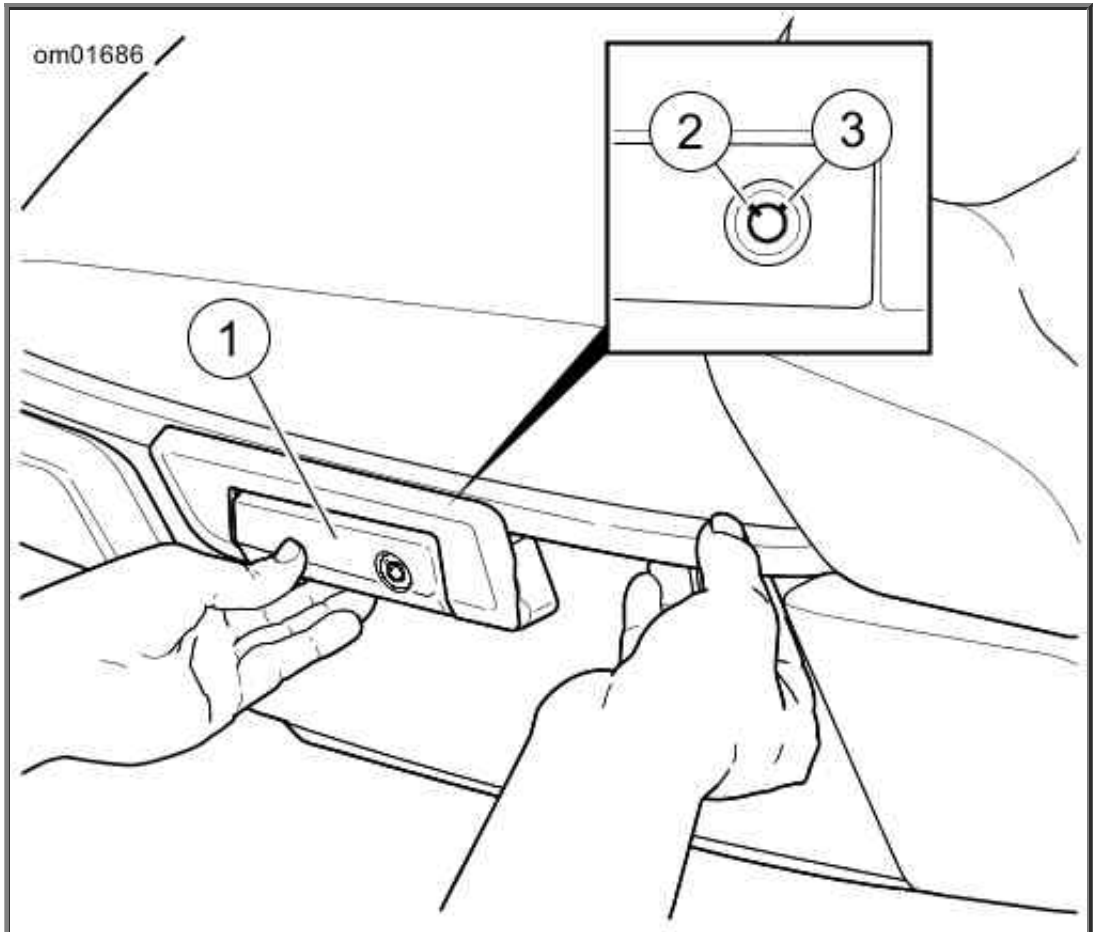

1. Latch handle
2. Unlock
3. Lock

Tour-Pak

Adjustment

The position of the Tour-Pak can be adjusted forward or rearward for passenger comfort.

NOTE:

The Tour-Pak position cannot be adjusted on Asia Pacific (APC) configuration motorcycles, except to access the seat screw. To determine vehicle configuration, check the VIN identifier in Harley-Davidson VIN Breakdown: 2016 Touring Models. See SEAT ACCESS (APC MODELS) to move the Tour-Pak on APC configuration vehicles.

1. See Tour-Pak Position Adjustment. Loosen the four nuts securing the Tour-Pak to the support.

2. Slide the Tour-Pak to the desired position.
3. Tighten the four nuts to 60-72 in-lbs (6.8-8.1 Nm).

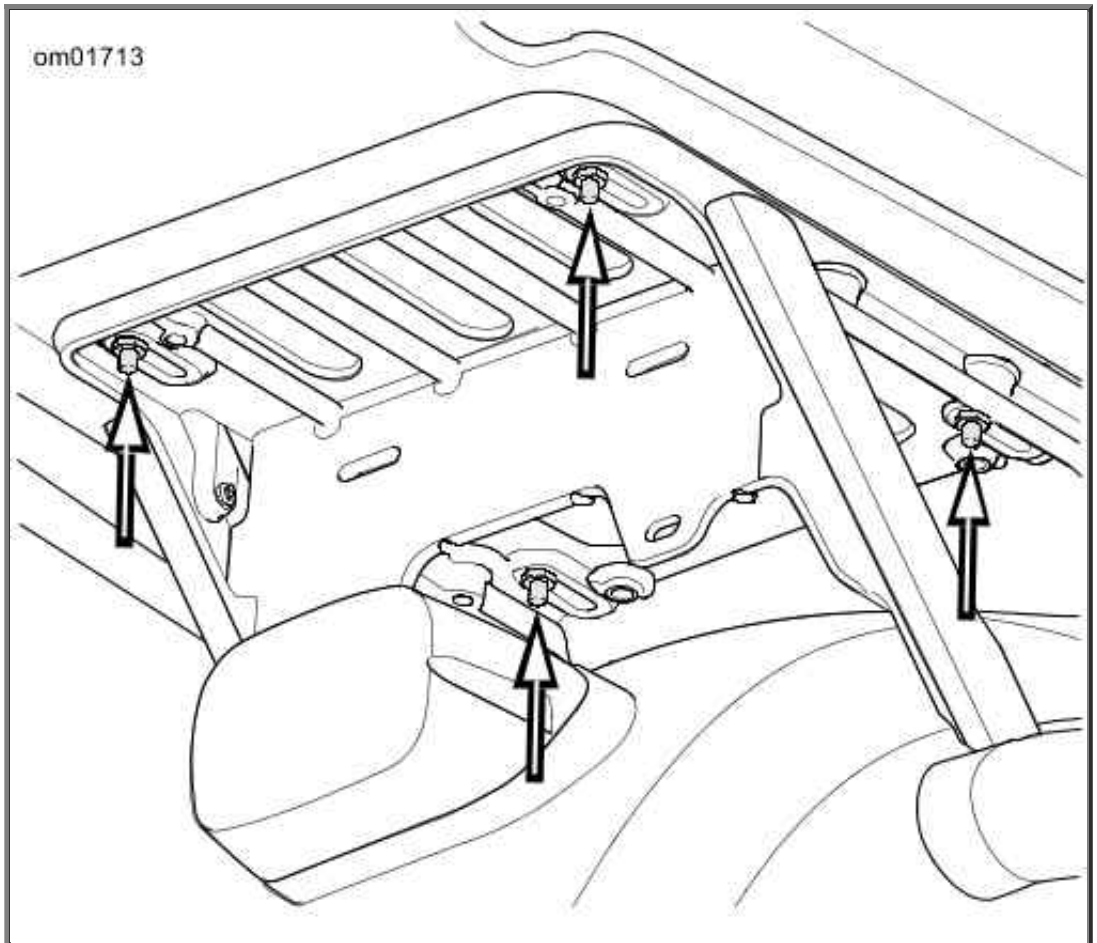

Tour-Pak Position Adjustment

Seat Access: APC Models

On APC vehicles, the Tour-Pak can be moved rearward to access the seat screw. Refer to the vehicle configuration for the motorcycle in Harley-Davidson VIN Breakdown: 2016 Touring Models. The Tour-Pak must be installed in its original position before riding.

1. See Tour-Pak Bracket Screws (APC Models). Remove the four screws securing the Tour-Pak bracket to the support.
2. Pull the Tour-Pak rearward to access the seat screw.
3. When finished, move the Tour-Pak to its original position. Align all four holes in the bracket with the slots in the support.

4. Install the four screws. Tighten to 60-72 in-lbs (6.8-8.1 Nm).

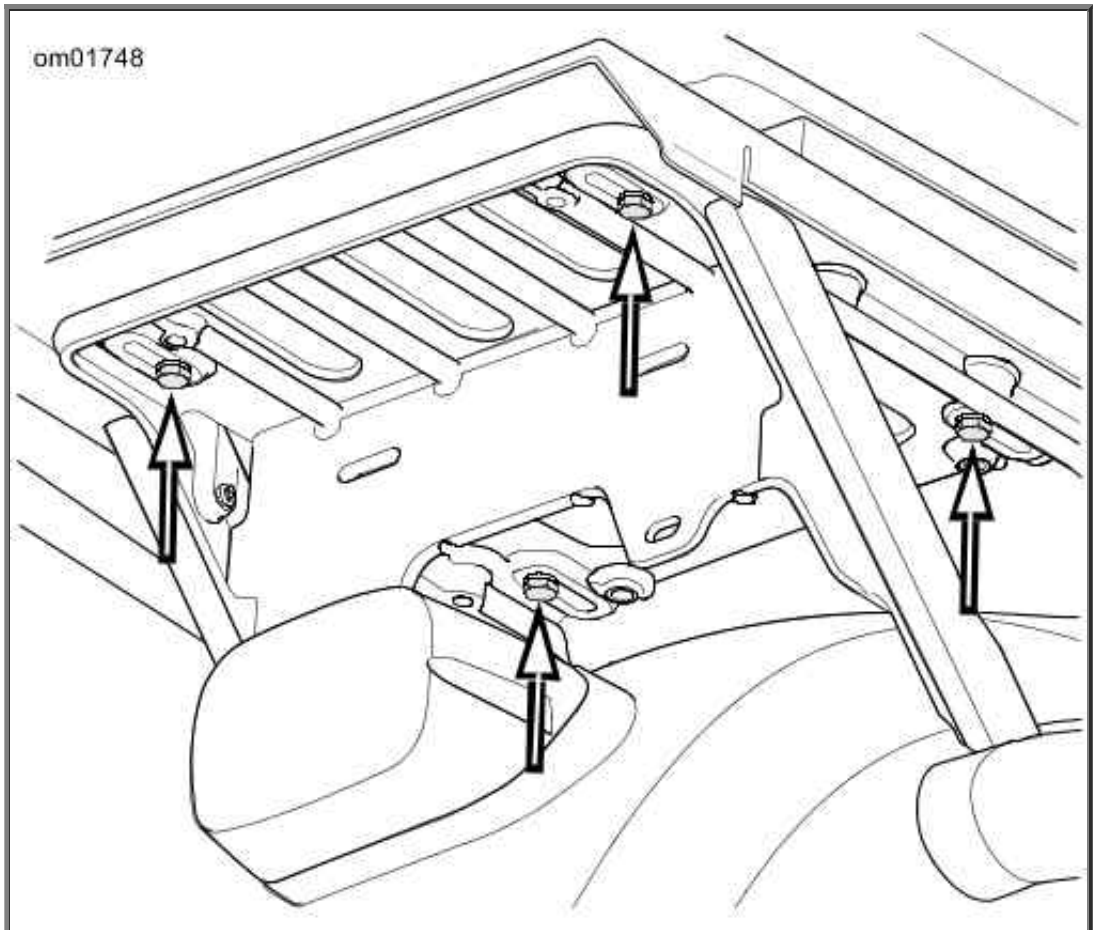

Tour-Pak Bracket Screws (APC Models)

Power Ports

See Fairing Power Port: FLTRU, FLTRX, FLTRXS, Fairing Power Port: FLHTCU, FLHTCUL, FLHTK, FLHTKL and Tour-Pak Power Port. Some models have up to two power ports. One port is in the fairing. The other port is in the Tour-Pak.

These ports can be used to power or charge 12 VDC accessories with a standard automotive power connector. Follow the manufacturer instructions when installing and operating accessories. Firmly push the accessory connector into the power port.

⚠WARNING

Be sure that steering is smooth and free without interference. Interference with steering could result in loss of vehicle control and death or serious injury. (00371a)

NOTES:

- *Before riding, rotate handlebars to the full right position and check for contact between installed accessories or wiring and the fuel tank.*
- *Do not use the power port as a cigarette lighter. Damage to the socket can occur. See an authorized Harley-Davidson dealer for available accessories.*

The port is energized while the ignition switch is in the IGNITION or ACCESSORY position. Powering accessories for an extended time while the engine is not running drains the battery.

The maximum current draw for all connected accessories is 15 A. This current draw includes the total current for all power ports and any other installed accessories installed. If excessive current is detected, the system cuts off power to the port. The system automatically enables power to the port again when it senses the overcurrent situation has ceased (such as when a faulty or high powered accessory has been removed).

Items charging in the power port may cause interference with radio reception.

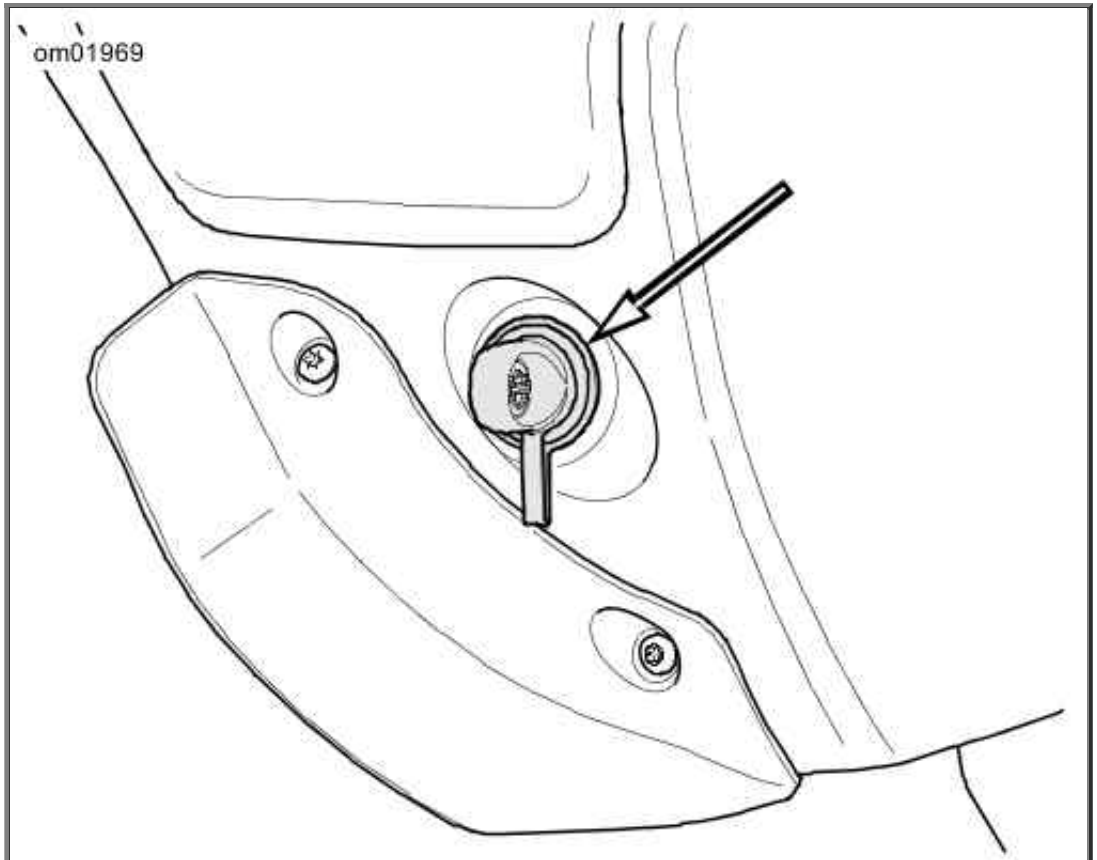

Fairing Power Port: FLTRU, FLTRX, FLTRXS

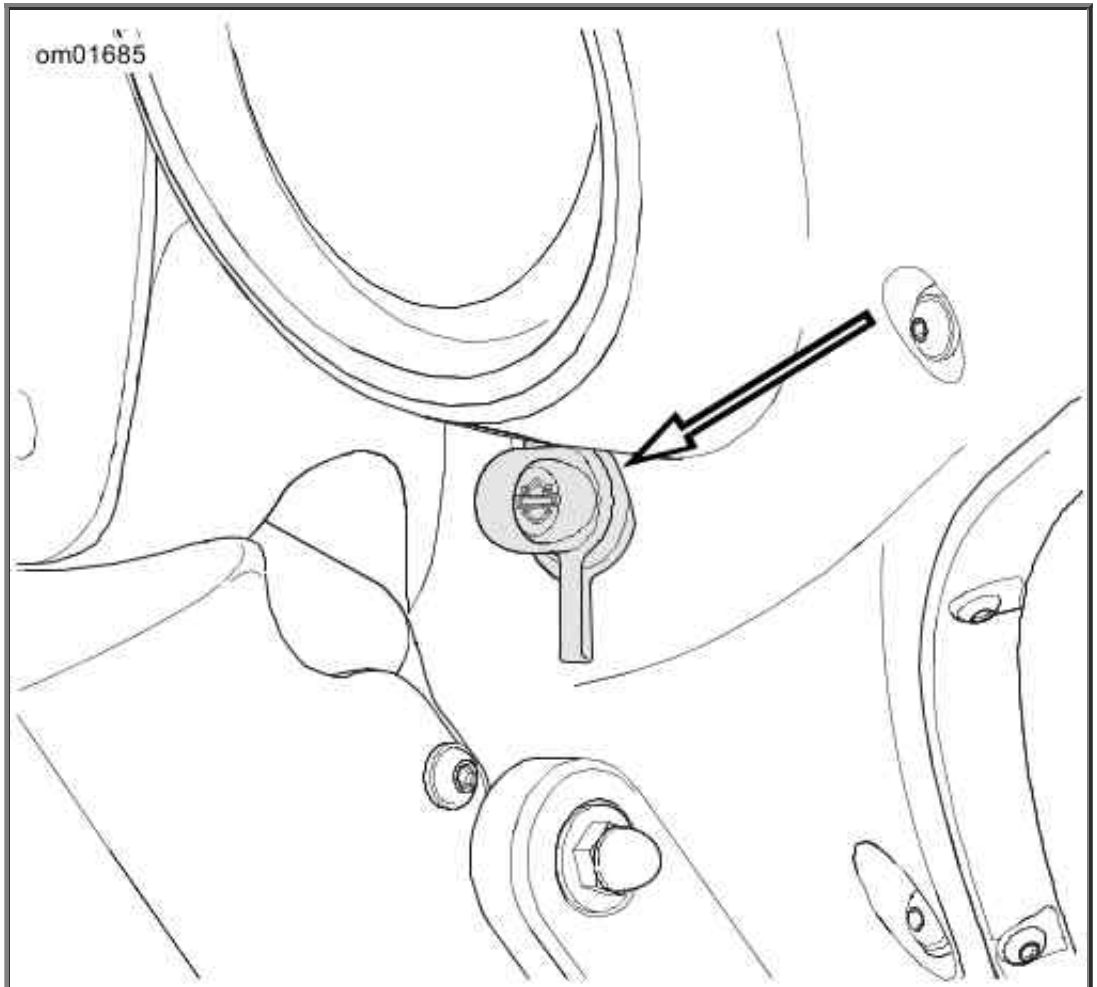

Fairing Power Port: FLHTCU, FLHTCUL, FLHTK, FLHTKL

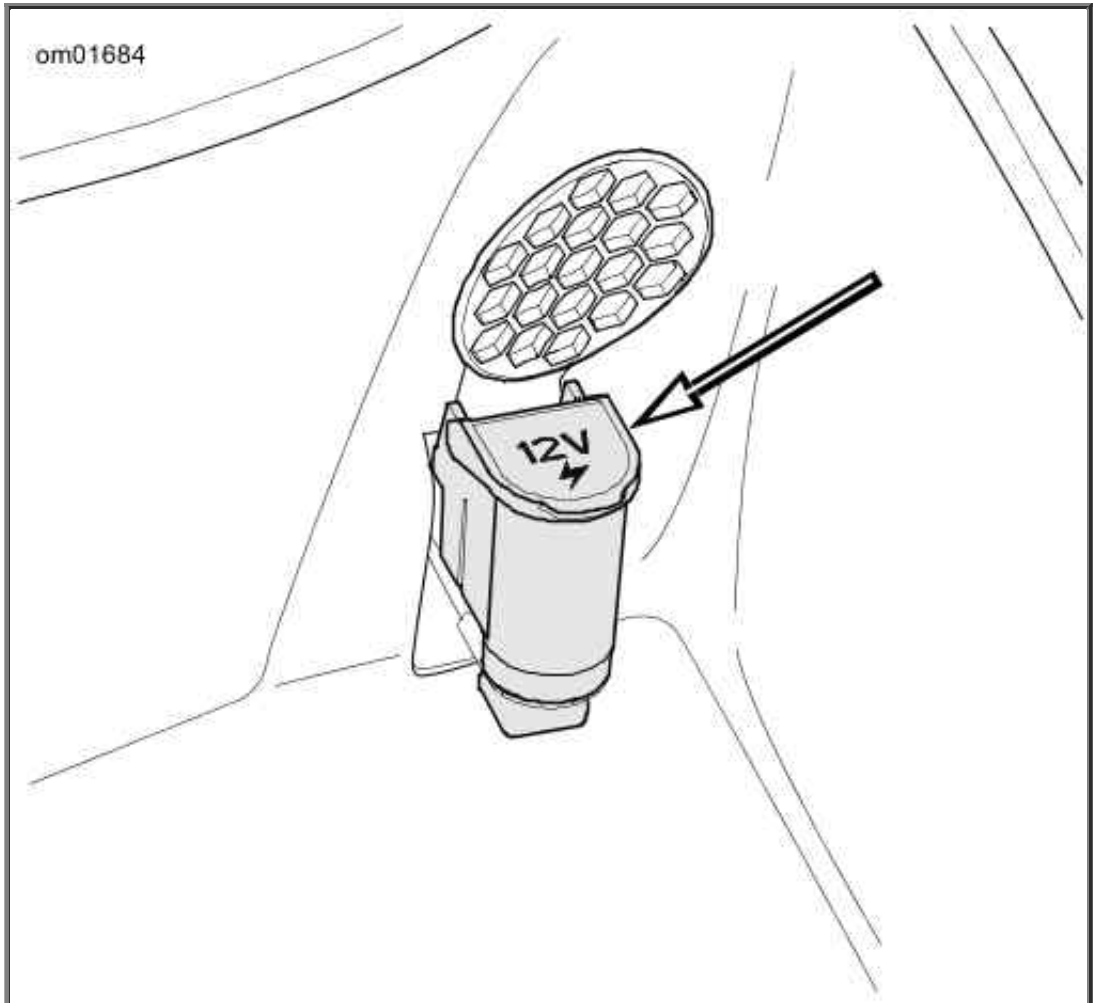

Tour-Pak Power Port

Fairing Vents

Vehicles with a fairing have a vent in the upper dash. Some models also have two air ducts along the inner sides of the fairing. These vents can be closed or opened to provide a comfortable flow of air to the rider and to reduce wind buffeting. The preferred position is to keep the vents open for reduced turbulence. Each vent is independently opened with its own button.

Open: See Fairing Splitstream Vent: FLTRU, FLTRX, FLTRXS, Fairing Splitstream Vent: FLHTCU, FLHTCUL, FLHTK, FLHTKL and Side Vent Door: FLTRU, FLTRX, FLTRXS (left side shown). Press in the vent button until it clicks. The vent door remains in the open position.

Close: Press in the vent button and release. The button pops up and the vent door closes.

Reset: If the latch does not catch, firmly press the button to open, close and reopen the vent until the mechanism engages.

Keep the vent free of foreign objects. Periodically clean the vent mechanism to remove dirt, bugs and leaves, and to keep all parts from sticking. Clean the

button and vent door if they become difficult to open or close. See Fairing Splitstream Vent Care.

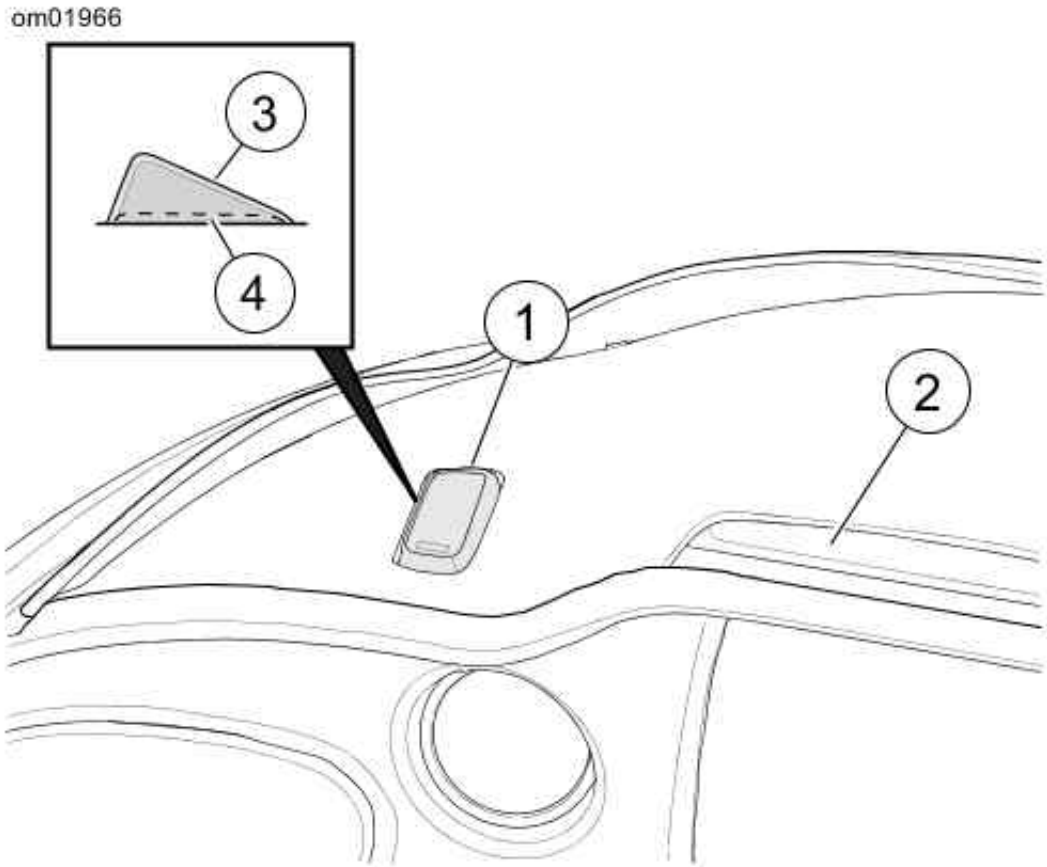

1. Vent button
2. Vent door
3. Button up (vent closed)
4. Button down (vent open)

Fairing Splitstream Vent: FLTRU, FLTRX, FLTRXS

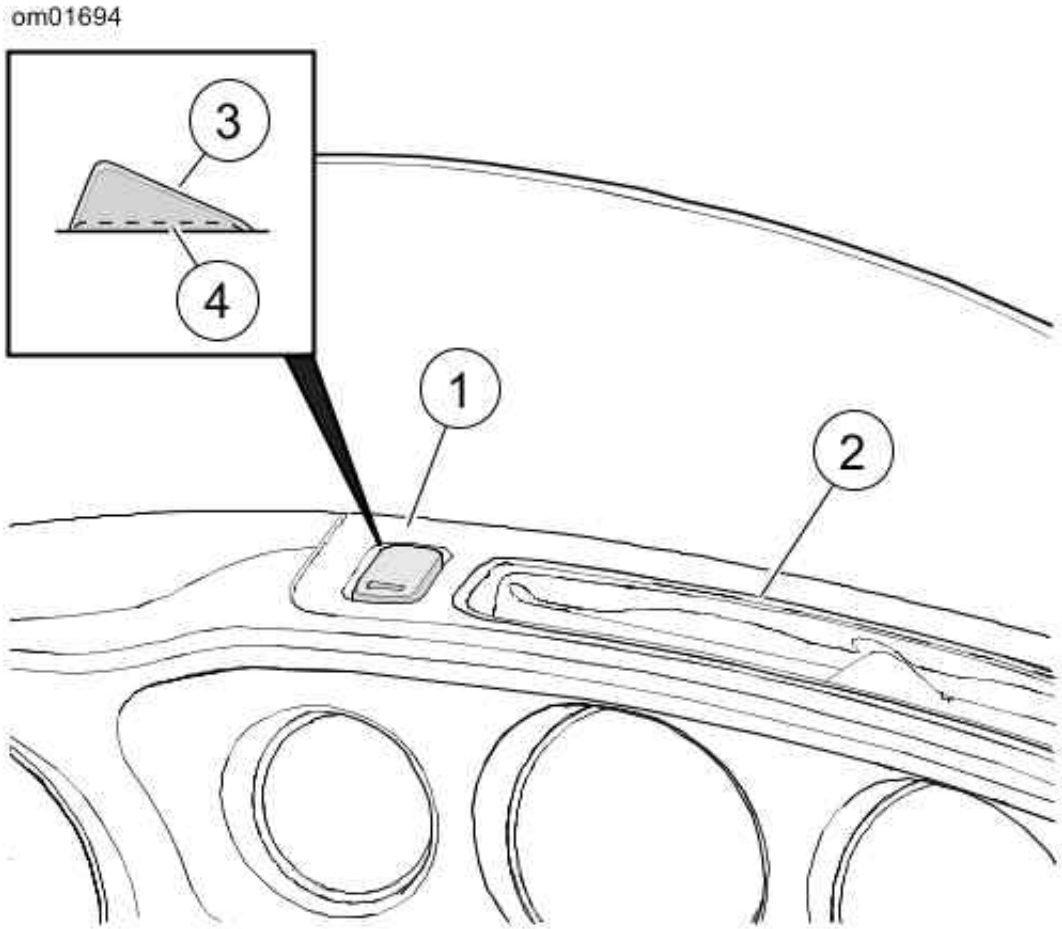

1. Vent button
2. Vent door
3. Button up (vent closed)
4. Button down (vent open)

Fairing Splitstream Vent: FLHTCU, FLHTCUL, FLHTK, FLHTKL

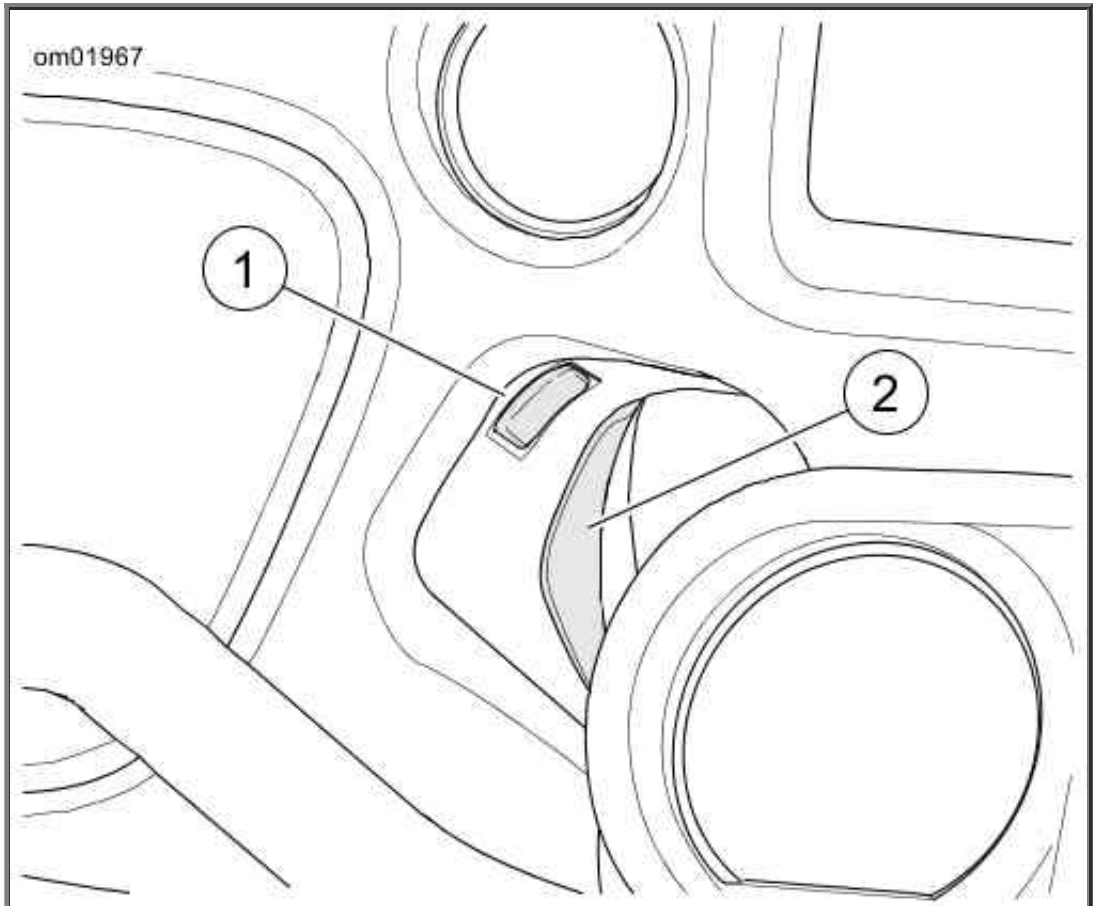

1. Vent button
2. Vent door

Side Vent Door: FLTRU, FLTRX, FLTRXS (left side shown)

Adjustable Air Deflectors

See Air Deflector. Some models have adjustable air deflectors located along the left and right edge of the fairing. These deflectors can be rotated to direct airflow for rider and passenger comfort.

Adjust: With the vehicle parked, grasp the outer edge of the deflector and pivot to the desired position.

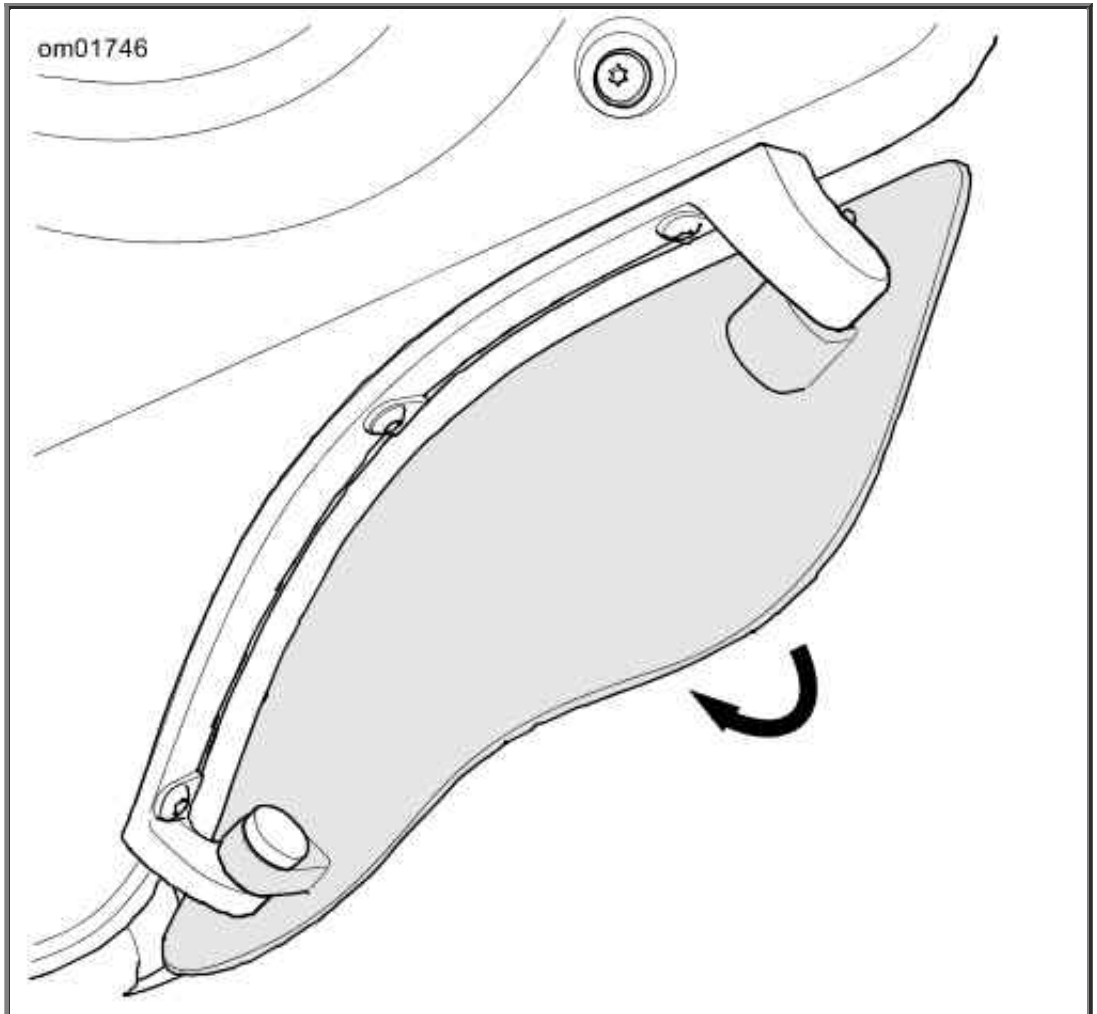

Air Deflector

Fairing Lowers

Some models have fairing lowers. The fairing lowers provide an extra level of riding comfort by blocking wind and water from the rider's legs.

Vent Door

See Fairing Lowers: Air-Cooled Models. The fairing lower vent door can be adjusted to direct airflow for rider comfort and circulate air across the engine. Slide the vent door lever to adjust or close the vent door.

Storage Compartment: Air-Cooled Models

See Fairing Lowers: Air-Cooled Models. Air-cooled models have fairing lowers with a storage compartment. Remove any valuable items from the storage compartment before leaving the motorcycle unattended.

Open: Push and release the indented tab at the top of the compartment door. Pull down the top of the door to open.

Close: Push the compartment door shut until it latches. Check that all compartment doors are secure before riding.

Reset: If the latch sticks or does not catch properly, firmly press the door to close. Open and close the door again to engage the latch mechanism.

NOTE:

The fairing lowers on Twin-Cooled models do not have a storage compartment. The access areas on these vehicles have a large opening at the bottom. Items placed in these access areas can fall out. Do not store any items in the fairing lowers on a Twin-Cooled vehicle.

Removing Fairing Lowers: Air-Cooled Models

Fairing lowers can be removed in warmer ambient temperature to increase rider and passenger comfort. Fairing lowers with speakers require the speakers to be removed and harnesses be disconnected. See the service manual to remove fairing lowers on air-cooled vehicles.

NOTE:

The fairing lowers on Twin-Cooled vehicles contain cooling system components. Do not remove fairing lowers on Twin-Cooled vehicles.

Cooling System: Twin-Cooled Vehicles

See Fairing Lowers: Twin-Cooled Models. On Twin-Cooled vehicles, the fairing lowers include cooling system components. The coolant bottle is behind the access panel in the right side fairing lower. See Cooling System to check the coolant level.

The access panel is secured with three retainers. Carefully pry at the top and at each lower corner to remove the access panel. To install, push the panel until the retainers snap into place.

Keep the radiator screen and outlet duct clean and free from obstructions.

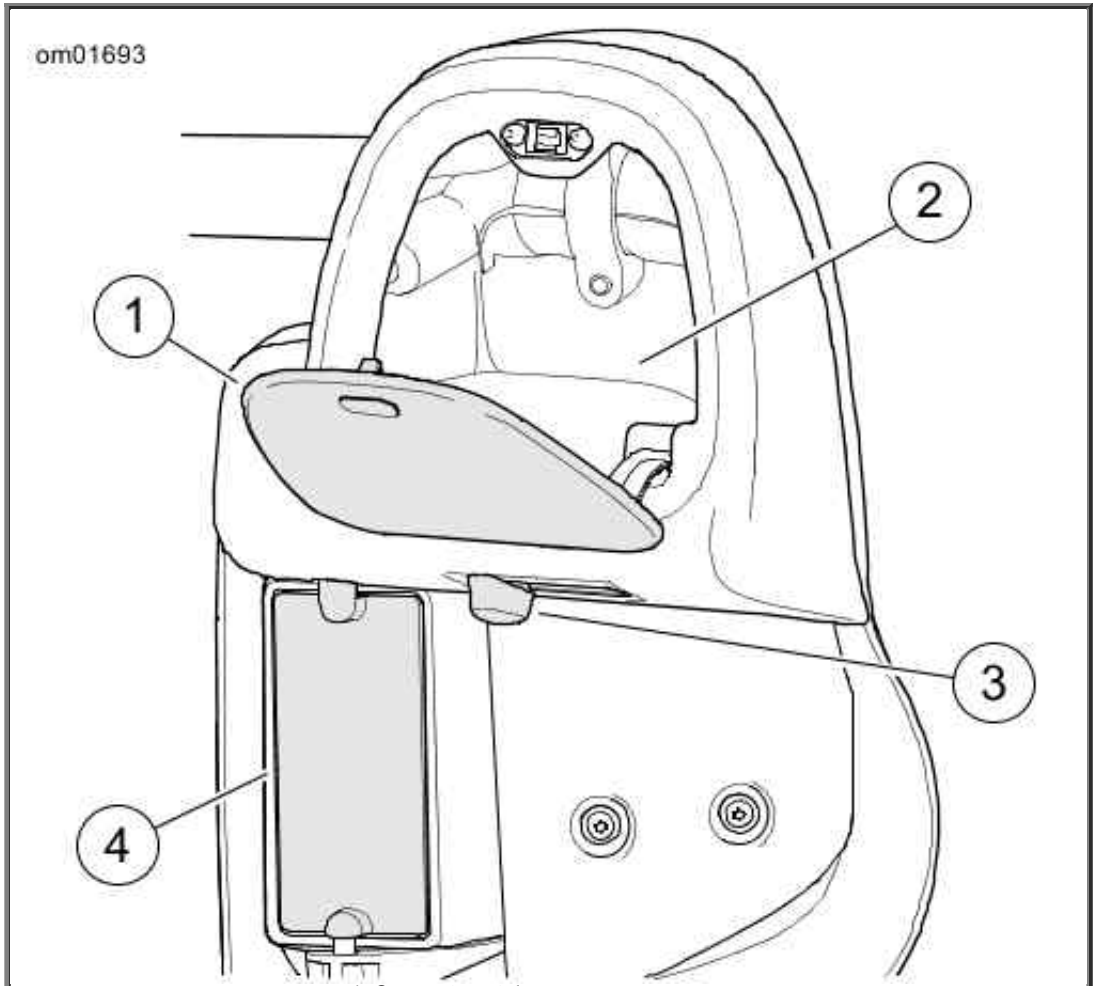

1. Compartment door
2. Storage compartment
3. Vent door lever
4. Vent door

Fairing Lowers: Air-Cooled Models

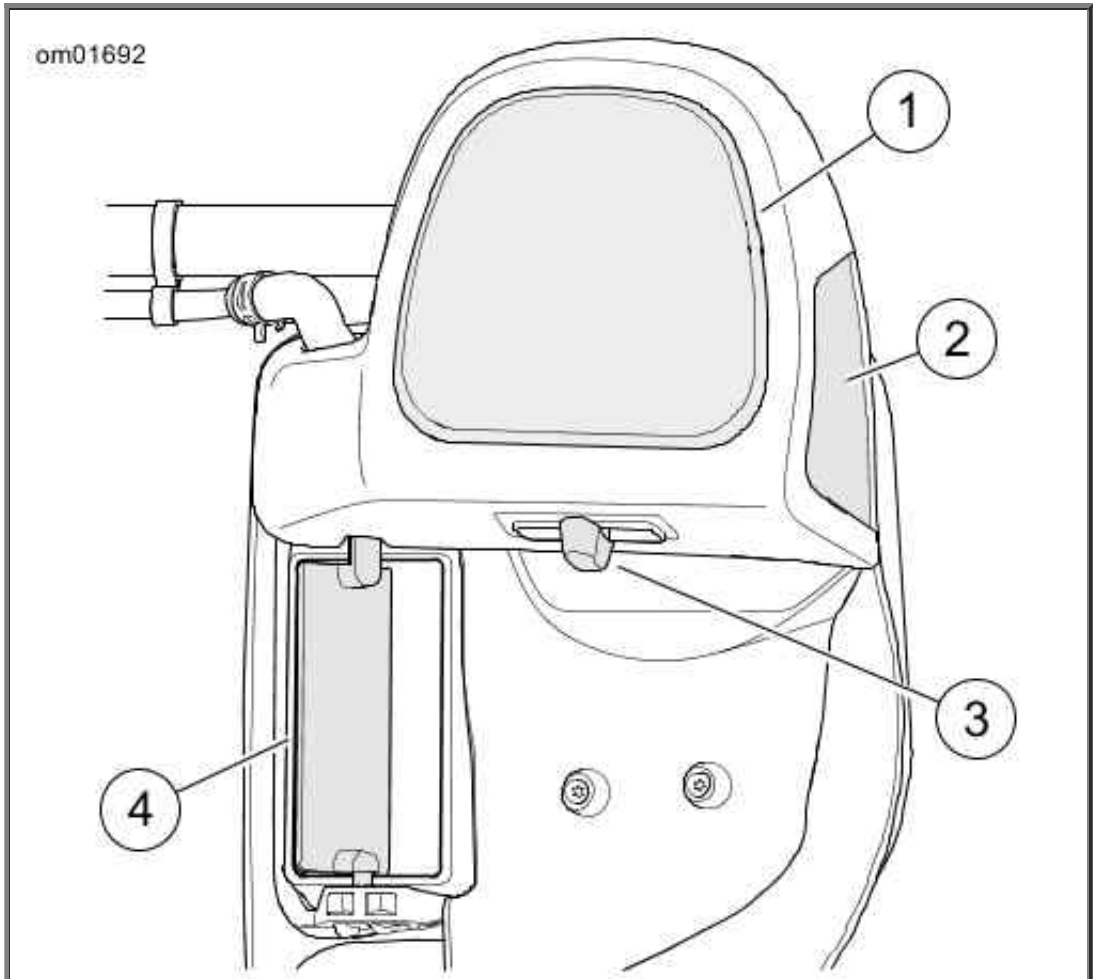

1. Access panel
2. Outlet duct
3. Vent door lever
4. Vent door

Fairing Lowers: Twin-Cooled Models

Windshield: FLHR, FLHRC

FLHR and FLHRC models feature a removable windshield. The windshield can be removed or installed before riding.

NOTE:

Windshields require special care. Do not use ammonia-based or gas station window cleaners. These cleaners can damage the windshield. For proper windshield maintenance, see Windshield Care.

Removal

1. See Windshield: FLHR, FLHRC. Lift the wire form latch springs on both sides of the windshield bracket.
2. Push the top of the windshield forward to disengage from the top grommets.
3. Lift the windshield up to disengage from the bottom grommets.

Installation

1. See Windshield: FLHR, FLHRC. Firmly seat the bottom of the windshield bracket to engage the lower grommets.
2. Lift the wire form latch springs on both sides of the windshield bracket.
3. Push the top of the windshield rearward to engage the top grommets.
4. Release the wire form latch springs. Check that all four bracket notches are seated in the grommets and the windshield is secure on the motorcycle.

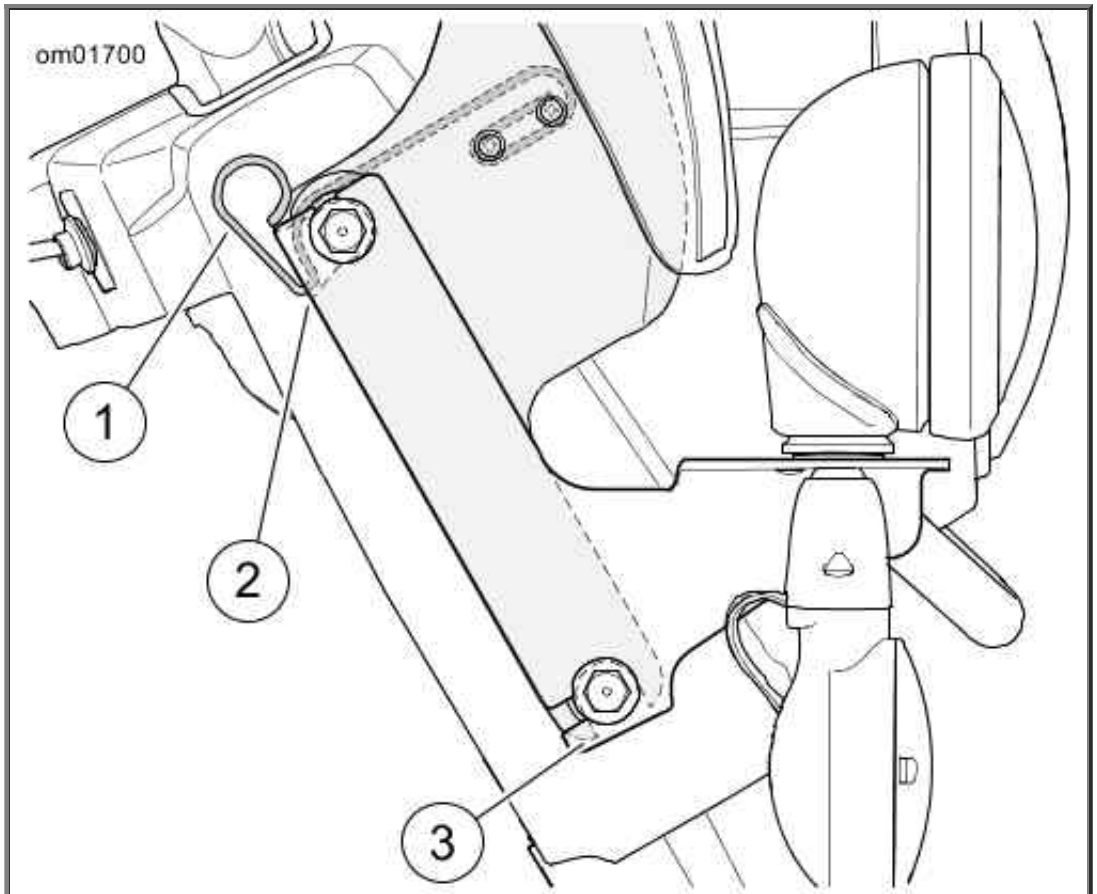

1. Wire form latch
2. Upper bracket notch
3. Lower bracket notch

Windshield: FLHR, FLHRC

Security System

Security System

Components

The security system consists of a control module, a hands-free antenna and a hands-free fob carried by the rider/passenger.

After parking the motorcycle, turn the ignition to OFF or ACCESSORY and the security system will automatically **arm** within five seconds. While armed, the starter and ignition are disabled and the rider can leave the motorcycle knowing that the module disables the ignition if someone tampers with the ignition switch or activates an alarm if someone attempts to move the motorcycle.

If the fob is present, the module automatically **disarms** when the ignition is turned to IGNITION or ACCESSORY.

NOTES:

- *If disconnecting the battery, see Disconnecting Power to prevent the optional security system siren from sounding.*
- *Do not relocate the module or the antenna.*

Options

See a Harley-Davidson dealer or www.harley-davidson.com for security system options.

- Smart Siren II.
- Security Pager and Security Pager Receiver II.
- Replacement fobs.

FCC Regulations

FCC ID: L2C0027TR IC ID: 3432A-0027TR

FCC ID: L2C0028TR IC ID: 3432A-0028TR

This device complies with Part 15 of the FCC Rules and with RSS-210 of Industry Canada rules. Operation is subject to the following two conditions:

(1) This device may not cause harmful interference, and (2) This device must accept any interference received, including interference that may cause undesired operation.

NOTE:

Changes or modifications not expressly approved by the party responsible for compliance could void the user's authority to operate the equipment.

The term "IC:" before the radio certification number only signifies that Industry Canada technical specifications were met.

Security System Fob

Fob Assignment

See Fob: Security System. Fobs are electronically assigned to the security system by a Harley-Davidson dealer. Up to two fobs can be assigned at any one time.

NOTES:

- *The reusable label found on the fob packaging lists the serial number of the fob. For reference, affix the label to a blank "NOTES" page in this Owner's Manual.*

- *The serial number of the fob is also found on the inside of the fob. See Fob Battery.*
- *The module will arm only if the fob has been assigned by a Harley-Davidson dealer and a personal identification number (PIN) has been entered in the system. Write the PIN on the personal information page in the front of this owner's manual and on the removable wallet card.*
- *If the fob is misplaced or the fob fails, refer to the wallet card and use the PIN to manually disarm the system. See Arming and Disarming and Troubleshooting.*
- *The rider can change the PIN at any time. See Arming and Disarming.*

Riding with a Fob

- Always carry the fob when riding, loading, fueling, moving, parking or servicing the motorcycle. Carry the fob in a convenient pocket.
- Do not leave the fob attached to the handlebars or store the fob in a luggage compartment. Unintentionally leaving the fob with the motorcycle when it is parked prevents the system from activating the alarm.
- Do not ride with the fob stored in a metal case or with the fob closer than 3.0 in 76 mm to a mobile phone, display or other electronic device. Any electromagnetic interference may prevent the fob from disarming the system.
- For added security, always lock the fork and remove the key when parked. If the fob is within range and the motorcycle is unlocked, tampering with the motorcycle will not activate the alarm.

Riding without a Fob

If the motorcycle is ridden off without the fob, the odometer window temporarily displays "NO FOB." To restart a motorcycle without a fob, disarm the security system with the PIN.

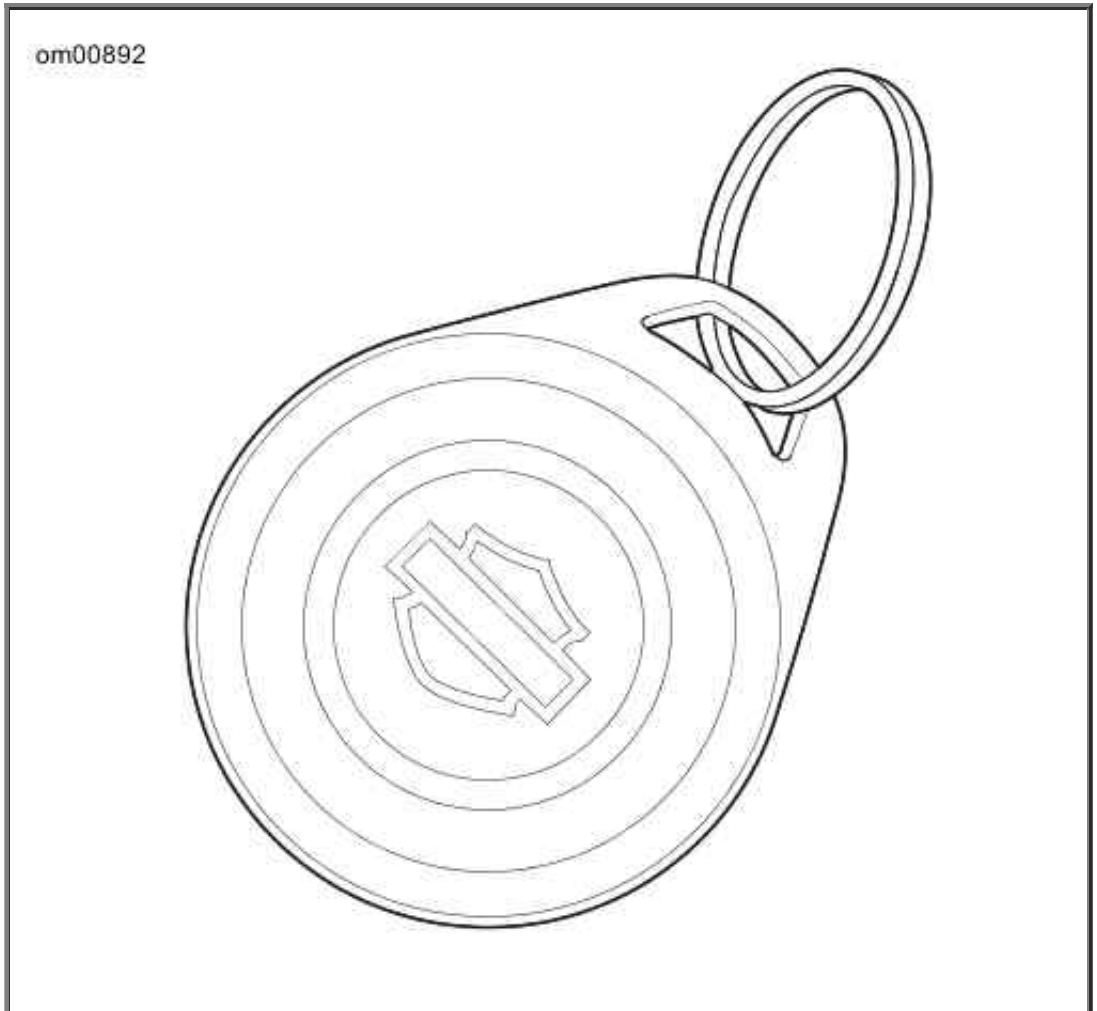

Fob: Security System

Personal Identification Number (PIN)

The personal identification number (PIN) is a number that can be used to disarm the security system. Use the PIN in case the assigned fob is misplaced, fails or if the fob cannot communicate with the motorcycle because of electromagnetic interference.

A PIN is a five-digit number (1-9, no zeros).

Changing the PIN

The rider can change the PIN at any time. Refer to Changing the PIN.

Changing the PIN

STEP NO.	ACTION	WAIT FOR CONFIRMATION	NOTES
1	Select a 5-digit (1 thru 9) PIN and record on the wallet card from owner's manual.		
2	With an assigned fob present, turn the engine stop switch to **OFF**.		
3	Turn the ignition switch to **IGN**.		
4	Cycle the OFF/RUN switch twice: **RUN - OFF - RUN - OFF - RUN**.		
5	Press **left** turn signal switch **two times**.	ENTER PIN will scroll through the odometer window.	
6	Press **right** turn signal switch **one time** and release.	Turn signals will flash three times. Current PIN will appear in odometer. The first digit will be flashing.	
7	Enter first digit of new PIN by pressing and releasing the **left** turn signal switch until the selected digit appears.		
8	Press **right** turn signal switch **one time** and release.	The new digit will replace the current in odometer window.	
9	Enter second digit of selected PIN by pressing and releasing the **left** turn signal switch until the selected digit is present.		
10	Press **right** turn signal switch **one time** and release.	The new digit will replace the current in odometer window.	
11	Enter third digit of the selected PIN by pressing and releasing the **left** turn signal switch until the selected digit is present.		
12	Press **right** turn switch **one time** and release.	The new digit will replace the current in odometer window.	
13	Enter fourth digit of new PIN by pressing and releasing the **left** turn signal switch until the selected digit is present.		
14	Press **right** turn switch **one time** and release.	The new digit will replace the current in odometer window.	
15	Enter fifth digit of the new PIN by pressing and releasing the **left** turn signal switch until the selected digit is present.		
16	Press **right** turn switch **one time** and release.	The new digit will replace the current in odometer window.	
17	Turn the engine stop switch **OFF**, then turn the ignition switch to **OFF**.		Pushing the engine stop switch to **OFF** stores the new PIN in the module.

Security Status Indicator

See Instruments: Models Except FLHR, FLHRC. The security lamp in the speedometer face indicates the status of the security system.

- **Armed:** A lamp that blinks approximately every three seconds indicates that the system is armed.
- **Disarmed:** After the system disarms and the ignition is on, the lamp will remain illuminated for approximately four seconds and then turn off.
- **Service:** A lamp that remains illuminated longer than four seconds when the system is disarmed indicates that service of the module is required.

Arming and Disarming

Arming

When the motorcycle is parked and the ignition is turned to OFF or ACCESSORY, the security system arms automatically within five seconds if no motion is detected. Even when the fob is present, the system arms.

On arming, the turn signals flash twice and the optional siren chirps twice if the siren is in the chirp mode. While armed, the indicator lamp in the speedometer face flashes every three seconds.

NOTE:

International models: *The system must be in the chirp mode for the siren to chirp on arming or disarming. See Siren Chirp Mode (Confirmation).*

Disarming

With the fob present, the rider may ride or move the motorcycle for parking, storage or service without setting off the alarm. Disarming is automatic as long as the fob is within range.

Fob: An armed security system is automatically disarmed when the fob is present and the motorcycle is moved or the ignition switch is turned to IGNITION or ACCESSORY. The range of the fob is 5 ft 1.5 m .

When the system disarms, the optional siren chirps once and the security indicator lamp illuminates for a solid four seconds and then turns off.

NOTE:

On any motion, like lifting the motorcycle up off its jiffy stand or turning the ignition to ON, the system will electronically "poll" for the presence of the fob. If the fob is present, the system disarms.

Personal identification number (PIN): If the fob is misplaced or if the present fob fails to communicate, the system can be disarmed with the personal identification number (PIN). Refer to Entering a PIN to Disarm Security System.

Disarming with a PIN

Disarm the security system manually using the PIN if the fob is lost, the fob battery is discharged or if where you parked there is a strong electromagnetic interference.

Do not turn handlebars, straddle seat or lift motorcycle off the jiffy stand. During a PIN disarm, if the security system detects motorcycle motion the system will activate the alarm.

NOTES:

- *If a mistake is made while entering PIN, turn the ignition Switch to OFF before entering the last digit and then start the procedure from the beginning.*
- *If the procedure fails to disarm the security system, wait two minutes before attempting another PIN disarm.*
- *The security system remains disarmed until the ignition is turned to OFF.*
- *At any time during a PIN disarm if the fob is brought within range, the security system disarms as the module receives the coded signal from the fob.*

Entering a PIN to Disarm Security System

STEP NO.	ACTION	WAIT FOR CONFIRMATION	NOTES
1	If necessary, verify the current 5-digit PIN.		Should be recorded on wallet card.
2	Turn ignition to **IGN**.	If armed, the odometer window display will read: ENTER PIN and the security lamp will be flashing at a fast rate. The headlight will not be on.	
3	Press and release the left turn signal switch.	In the odometer window, a flashing 1 will appear.	
4	Advance the digit by tapping the left turn signal until the odometer window displays the first digit of the PIN.	The first digit in the odometer will be the first digit in the PIN.	
5	Press **right** turn switch **1 time.**	The first digit is stored and the next digit will flash.	Serves as enter key.
6	Advance the second digit using the left turn switch until the digit reaches the second digit of the PIN.	The second digit in the odometer will be the second digit in the PIN.	
7	Press **right** turn switch **1 time.**	The second digit is stored and the next dash will flash.	Serves as enter key.
8	Advance the third digit using the left turn switch until it reaches the third digit of the PIN.	The third digit in the odometer will be the third digit in the PIN.	
9	Press **right** turn switch **1 time**.	The third digit is stored and the next dash will flash.	Serves as enter key.
10	Advance the fourth digit using the left turn switch until it reaches the fourth digit of the PIN.	The fourth digit in the odometer will be the fourth digit in the PIN.	
11	Press **right** turn switch **1 time.**	The fourth digit is stored and the next dash will flash.	Serves as enter key.
12	Advance the fifth digit using the left turn switch until it reaches the fifth digit of the PIN.	The fifth digit in the odometer will be the fifth digit in the PIN.	
13	Press **right** turn switch **1 time**.	The fifth digit is stored. The security system indicator lamp stops blinking.	Security System is disarmed.

Alarm

Ignition Disabled

When the fob is not present and the system is armed, if the ignition switch is turned to IGNITION or ACCESSORY, the security lamp will flash at a fast rate and the odometer window display will scroll "ENtER PIN". The headlamp will not turn on.

After approximately 10 seconds, if the system does not receive a left turn signal switch input, the display will go blank. The ignition system will remain disabled until the fob is present or the current PIN is entered.

Warnings

Once armed, if the motorcycle is moved or lifted up off of its jiffy stand and the fob is not present, the alarm will warn the operator with three alternate flashes of the turn signals and a chirp of the optional siren.

Within four seconds, if the motorcycle is back on its jiffy stand and no further motion is detected and/or the ignition is turned to OFF, the system will remain armed without activating the alarm.

If the motorcycle motion continues, the system will issue a second warning four seconds after the first.

NOTE:

During warnings and alarms, the starter motor and the ignition circuits are disabled.

Alarm Activation

If the security system is still detecting motion and/or if the ignition has not been turned back to OFF after a second warning, the system will activate the alarm.

When activated, the security system will:

- Alternately flash the four turn signals.
- Sound the optional siren.

Duration: The alarm will stop within 30 seconds and if no motion is detected, the alarm will not restart.

However, if motorcycle motion continues, the system will repeat the 30 second alarm and recheck for motion. The alarm will repeat this 30 second alarm cycle for five minutes (10 cycles) or until the alarm is deactivated.

NOTE:

The alarm will also activate the LED, vibration or audible modes of a Harley-Davidson security pager. A pager can operate either in silent or in combination with an optional siren. The range of a pager can be up to 0.5 mi 0.8 km . See a Harley-Davidson dealer for details.

Deactivate Alarm

- **Key fob:** Bring the fob to within 5 ft 1.5 m of the motorcycle. After the module identifies that the fob is present, the system will terminate the alarm.
- **PIN entry:** Enter the PIN to deactivate the alarm. If an error is made while entering the PIN, wait until the alarm is between cycles to enter the PIN.

Siren Chirp Mode (Confirmation)

Chirp Mode

In chirp mode, the siren sounds two chirps when arming, and a single chirp when disarming.

Chirpless Mode

In chirpless mode, the siren does not chirp on arming or disarming.

The siren still provides warning chirps and sounds the alarm if motorcycle is moved or ignition switch is turned on without the fob present.

Switching Modes

Quickly cycling ignition switch ON-OFF-ON-OFF-ON switches the system from one mode to the other.

1. With the fob present, turn the ignition switch to IGNITION.
2. When the security lamp turns off, turn the ignition switch to OFF.
3. When the security lamp turns off (but before the turn signals flash twice), immediately turn the ignition switch to IGNITION.
4. When the security lamp turns off, immediately turn the ignition switch to OFF.
5. When the security lamp turns off (but before the turn signals flash twice), immediately turn the ignition switch to IGNITION.

Transport Mode

When transporting the motorcycle, place the system in the transport mode. Otherwise, the alarm activated by motion detection can discharge the battery.

In the transport mode, the security system is armed without enabling the motion detector for one ignition cycle. This allows the vehicle to be picked up and moved in an armed state. However, any attempt to start the engine when the fob is not within range will trigger the alarm.

To Enter Transport Mode

1. With an assigned fob within range, turn the ignition switch to IGNITION.
2. Before the security lamp goes out, turn the ignition switch to OFF.
3. Within three seconds, simultaneously press both the left and the right turn signal switches.
4. After the turn signals flash once, the system enters the transport mode. With the fob removed, the motorcycle can be moved without setting off the alarm.

To Exit Transport Mode

With the fob present, turn the ignition switch to IGNITION to disarm the system.

Storage and Service Departments

Long-Term Parking

To maintain arming, store the fob beyond the range of the antenna. The antenna range is approximately 5 ft 1.5 m . Have the fob present before moving parked motorcycle.

If the motorcycle will not be operated for several months, such as during the winter season, see Motorcycle Storage.

Service Departments

When the motorcycle is left at a Harley-Davidson dealer, there are two options:

1. Leave an assigned fob with the dealer.
2. To maintain possession of the fob, ask the dealer to disable the system for service (service mode) before leaving the dealership.

Fob Battery

Replacing the Battery

Replace the fob battery every year.

1. See Fob Battery. Slowly turn a thin blade in the thumbnail slot (1) on the side of the fob to separate the two halves.
2. Remove the battery (2) and discard.
3. Install a **new** battery (Panasonic 2032 or equivalent) with the positive side down.
4. Align the two halves of the fob. Snap the halves together.

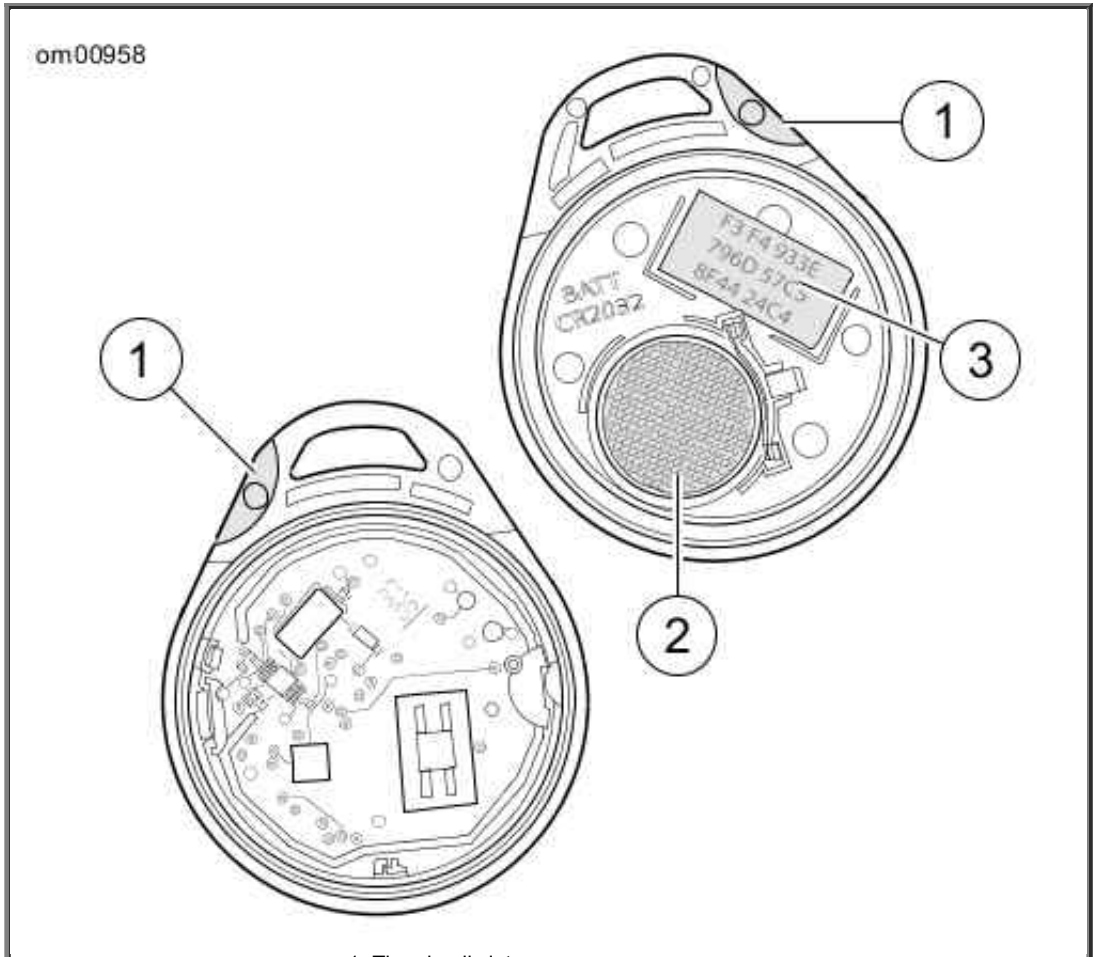

1. Thumbnail slot
2. Battery
3. Fob serial number

Fob Battery

Disconnecting Power

Siren Equipped Models

When disconnecting the battery or removing the main fuse, perform the following steps to prevent the optional siren from sounding.

1. Verify that the fob is present.

2. Turn the ignition switch to IGNITION.
3. Pull the main fuse from its holder or disconnect the battery.

NOTE:

Place the ignition switch in the OFF position before installing the main fuse.

Troubleshooting

Security System Indicator

If the system indicator lamp stays illuminated while riding, see a Harley-Davidson dealer.

Fob

If the security system continues to actuate warnings and alarms with the fob present, check for:

1. **Electromagnetic interference:** Other electronic devices, power lines or other electromagnetic sources can cause the security system to operate inconsistently.
    a. Verify that the fob is not in a metal enclosure or within 3.0 in 76 mm of any other electronic devices.
    b. Place the fob on the seat and turn the ignition to IGN. After the system disarms, return the fob to a convenient location.
    c. Move motorcycle at least 15 ft 5 m from the spot of interference.
    d. Use the PIN to disarm the system.

    NOTE:

    Leaving a fob next to a computer monitor can run down the battery.
2. **Discharged fob battery:** Use the PIN to disarm the system. Replace the battery. See Fob Battery.
3. **A damaged fob:** Use the PIN to disarm the motorcycle. Replacement fobs are available for purchase from a Harley-Davidson dealer.

Siren

- If the siren does not chirp two or three times on a valid arming command from the security module, the siren is either in the chirpless mode, not connected, not working, or the siren wiring was opened or shorted while the siren was disarmed.
- If the siren is armed and the internal siren battery is dead, shorted, disconnected, or has been charging for a period longer than 24 hours, the siren will respond with three chirps on arming instead of two.
- The internal siren battery may not charge if the vehicle's battery is less than 12.5 volts.
- If the siren enters the self-driven mode where it is powered from the siren's internal 9 volt battery, the turn signal lamps may or may not alternately flash. If the security module activates the siren, the turn signal lamps will alternately flash. If the siren has been armed and a security event occurs, and the siren is in self-driven mode, the siren will alarm for 20-30 seconds and then turn off for 5-10 seconds. This alarm cycle will be repeated ten times if the siren is in the self-driven mode.

Operation

Operating Recommendations

⚠WARNING

Motorcycles are different from other vehicles. They operate, steer, handle and brake differently. Unskilled or improper use could result in loss of control, death or serious injury. (00556c)

- Take a rider training course.
- Read owner's manual before riding, adding accessories or servicing.
- Wear a helmet, eye protection and protective clothing.
- Never tow a trailer.

⚠WARNING

Travel at speeds appropriate for road and conditions and never travel faster than posted speed limit. Excessive speed can cause loss of vehicle control, which could result in death or serious injury. (00008a)

CAUTION

Do not run the engine at extremely high RPM with clutch disengaged or transmission in neutral. Running an engine at high RPM can result in engine damage. (00177a)

CAUTION

Do not exceed the maximum safe RPM specified below under any conditions. Exceeding the maximum safe engine RPM can result in equipment damage. (00248a)

- The maximum recommended safe engine speed is 5500 rpm.
- Do not idle engine unnecessarily for more than a few minutes with motorcycle standing still.

CAUTION

Air-cooled engines require air movement over the cylinders and heads to maintain proper operating temperature. Extended periods of idling or parade duty can overheat the engine, resulting in serious engine damage. (00178a)

An engine running long distances at high speed must be given closer than ordinary attention to avoid overheating and possible engine damage.

This applies particularly to a motorcycle equipped with windshield and fairing.

⚠WARNING

When riding on wet roads, brake efficiency and traction are greatly reduced. Failure to use care when braking, accelerating or turning on wet roads can cause loss of control, which could result in death or serious injury. (00041a)

⚠WARNING

Continuous use of brake causes overheating and reduced efficiency, which could result in death or serious injury. (00042a)

⚠WARNING

Do not tow a disabled motorcycle. Towing can adversely affect stability and handling, which could result in death or serious injury. (00017a)

NOTES:

- *Have the engine checked regularly and keep it well tuned.*
- *When descending a long, steep grade, downshift and use engine compression together with intermittent application of both brakes to slow the motorcycle.*

Break-In Riding Rules

The First 500 Miles (800 Kilometers)

The sound design, quality materials and workmanship that are built into your new Harley-Davidson gives you optimum performance right from the start.

To allow your engine to wear-in its critical parts, we recommend that you observe the riding rules for the first 500 mi 800 km .

1. During the first 50 mi 80 km of riding, keep the engine speed below 3000 rpm in any gear. Do not lug the engine by running or accelerating at low rpm, or by running at high rpm longer than needed for shifting or passing.

2. Up to 500 mi 800 km , vary the engine speed and avoid operating at any steady engine speed for long periods. Engine speed up to 3500 rpm in any gear is permissible.

3. Drive slowly and avoid fast starts at wide open throttle until the engine has warmed up.

4. Avoid lugging the engine by not running the engine at low speeds in higher gears.
5. Avoid hard braking. Break in new brakes with moderate use for the first 200 mi 300 km .

Pre-Riding Checklist

⚠WARNING

Read the CONTROLS AND INDICATORS section before riding your motorcycle. Failure to understand the operation of the motorcycle could result in death or serious injury. (00043a)

Always inspect motorcycle condition before riding.

⚠WARNING

Stop the engine when refueling or servicing the fuel system. Do not smoke or allow open flame or sparks near gasoline. Gasoline is extremely flammable and highly explosive, which could result in death or serious injury. (00002a)

⚠WARNING

Avoid spills. Slowly remove filler cap. Do not fill above bottom of filler neck insert, leaving air space for fuel expansion. Secure filler cap after refueling. Gasoline is extremely flammable and highly explosive, which could result in death or serious injury. (00028a)

⚠WARNING

Use care when refueling. Pressurized air in fuel tank can force gasoline to escape through filler tube. Gasoline is extremely flammable and highly explosive, which could result in death or serious injury. (00029a)

1. Check fuel level. Add fuel if necessary.
2. Adjust mirrors to proper riding positions.
3. Check engine oil level. Add oil if necessary.
4. Check controls to make sure that they operate properly. Operate the front and rear brakes, throttle, clutch and shifter. All controls should operate freely without binding.
5. Check steering for proper operation by turning the handlebars through the full operating range. Handlebars should turn smoothly without binding.

⚠WARNING

Be sure tires are properly inflated, balanced, undamaged, and have adequate tread. Inspect your tires regularly and see a Harley-Davidson dealer for replacements. Riding with excessively worn, unbalanced, improperly inflated, overloaded or damaged tires can lead to tire failure and adversely affect stability and handling, which could result in death or serious injury. (00014b)

6. Check tire condition, pressure and motorcycle loading. Incorrect pressure and excessive loading can lead to tire or wheel failure, and can affect handling and stability. For correct tire pressures, refer to Specified Tires.

⚠WARNING

Be sure headlamp, tail and stop lamp and turn signals are operating properly before riding. Poor visibility of rider to other motorists can result in death or serious injury. (00478b)

7. Test all switches and lights for proper operation.
8. Check for any fuel, oil or hydraulic fluid leaks. Check for coolant leaks on applicable vehicles.
9. Check drive belt for wear or damage.
10. Service your motorcycle as necessary.

Starting the Engine

General

CAUTION

The engine should be allowed to run slowly for 15-30 seconds. This will allow the engine to warm up and let oil reach all surfaces needing lubrication. Failure to comply can result in engine damage. (00563b)

Rolling the throttle before starting the motorcycle is unnecessary.

Starting

⚠WARNING

Shift transmission to neutral before starting engine to prevent accidental movement, which could result in death or serious injury. (00044a)

1. Turn ignition switch to IGNITION position. Do not roll the throttle.
2. See Right Hand Control. With the security system fob present, turn the OFF/RUN switch to RUN position.

   NOTE:

   The engine lamp will light for approximately 4 seconds and you will hear the fuel pump purr for approximately 2 seconds as it operates to fill the fuel lines with gasoline.

3. Raise the jiffy stand (required on international models).
4. Squeeze the clutch lever in against the handgrip. Shift transmission to neutral.

   NOTE:

   To activate the starting system, the clutch interlock circuitry requires that the clutch be disengaged. The clutch lever must be pulled in against the left handlebar grip and/or the transmission must be shifted to the neutral position (with the green neutral lamp lit). Apply the brake to prevent movement of the motorcycle.

5. Press the starter button to start the motorcycle.
6. When the engine has started, you can operate your motorcycle as you normally would after raising the jiffy stand.

NOTE:

The ABS indicator lamp will remain on until vehicle is moving approximately 3 mph 5 km/h .

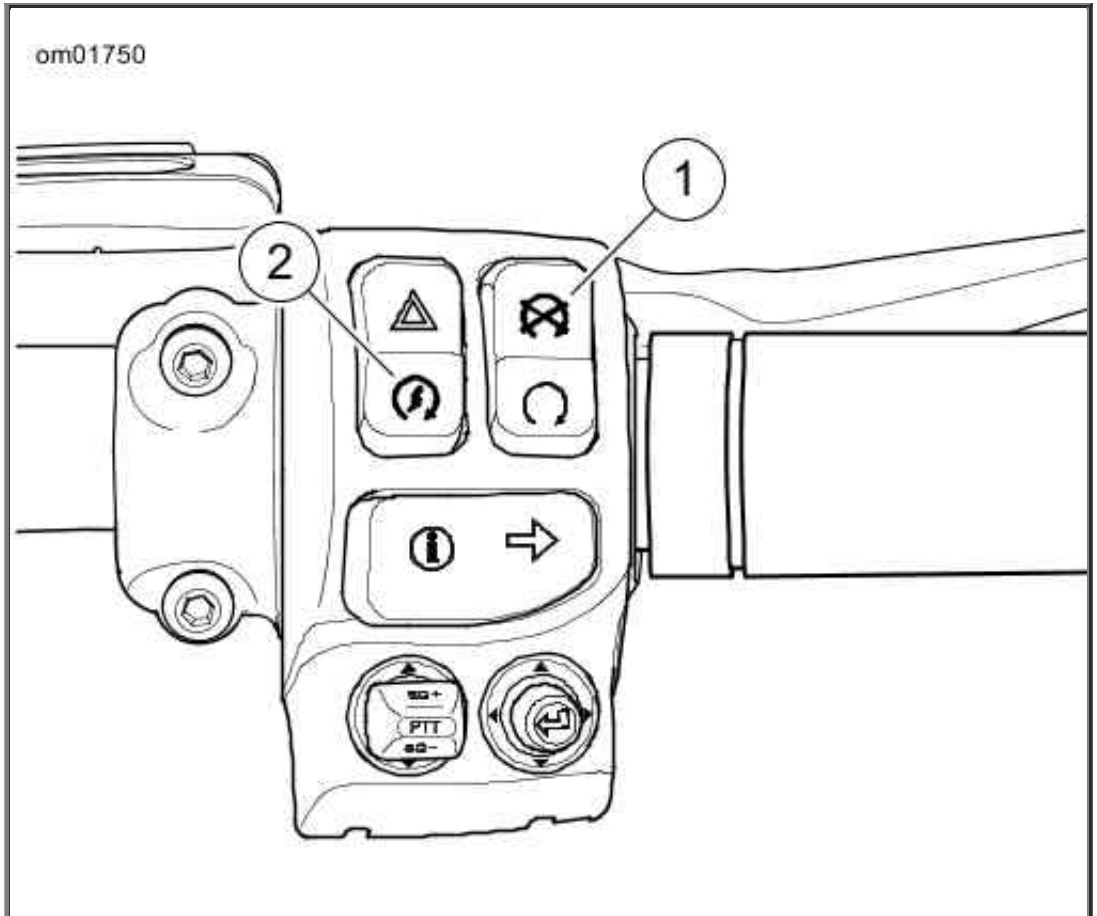

1. Engine off/run switch
2. Engine start switch

Right Hand Control

Stopping the Engine

1. Stop the engine by turning the engine off/run switch on the right handlebar to off.
2. Turn the ignition switch to off. If the engine should be stalled or stopped in any way, turn the ignition switch to OFF at once to prevent battery discharge.

Starting after Tipover

⚠WARNING

If tip occurs, check all controls for proper operation. Restricted control movement can adversely affect the performance of the brakes, clutch or ability to shift, which could result in loss of vehicle control and death or serious injury. (00350a)

After a tipover, reset the ignition before starting the engine.

NOTE:

The word "tIP" appears in the odometer window.

1. Set the motorcycle upright.
2. Reset the ignition by turning the ignition switch OFF-IGNITION.

Engine Idle Temperature Management System

The Engine Idle Temperature Management System (EITMS) can provide limited cooling of the rear cylinder for riders who frequently find themselves in prolonged idle conditions or traffic congestion.

Operation

When engine temperature reaches a predetermined point, the EITMS turns off the rear cylinder fuel injector. The rear cylinder becomes an "air pump" which works to cool the engine.

EITMS activates (rear cylinder turns off) when **all** of the following conditions are met:

- Ambient temperature or engine temperature exceeds temperature threshold
- Throttle control is at idle
- Vehicle speed under 1 mph 2 km/h
- Engine speed under 1200 rpm

NOTE:

EITMS does not activate within the first four minutes after starting the vehicle.

EITMS disables (rear cylinder begins firing again) if **any one** of the following occurs:

- Ambient temperature or engine temperature falls below temperature threshold
- Throttle control is above idle
- Vehicle speed exceeds 2 mph 3 km/h
- Engine speed exceeds 1350 rpm
- Clutch is released with vehicle in gear

When the engine is in EITMS operation, you may notice a difference in idle cadence. Additionally, there may be a unique exhaust odor. These are both considered to be normal conditions.

Enabling/Disabling EITMS

Enabled: The EITMS engine cooling feature automatically activates whenever the vehicle comes to a complete stop and is idling during elevated temperature conditions. When the feature is enabled, it may not activate under cool riding conditions.

Disabled: The EITMS feature is not active under any conditions.

EITMS can be enabled or disabled by performing the following procedure.

1. Turn ignition switch ON. Push the engine OFF/RUN switch on the right handlebar to the RUN position (the motorcycle may be running or not running).
2. Push the throttle to roll-off position and hold.
3. See Instruments: Models Except FLHR, FLHRC and Instruments: FLHR, FLHRC. After approximately 3 seconds, the cruise indicator lamp will either flash green (EITMS enabled) or orange (EITMS disabled).
4. Repeat the procedure as necessary to enable or disable EITMS.

NOTES:

- *A flashing cruise lamp indicates the EITMS setting. A solid (non-flashing) lamp indicates the cruise control setting.*
- *The EITMS setting remains in effect until it is changed by the rider or dealer. There is no need to reconfigure EITMS at each startup.*

Shifting Gears

CAUTION

The clutch must be fully disengaged before attempting a gear shift. Failure to fully disengage the clutch can result in equipment damage. (00182a)

Stopped, Engine Off

Squeeze in the clutch lever to fully disengage the clutch. Gears may not engage because the transmission shafts are not turning and shifter components are not lined up. Rock the motorcycle backward and forward while lightly pressing on the shift lever.

Starting from a Stop

NOTE:

Always start the engine with the transmission in neutral. Always start forward motion in first gear.

1. With the engine running and the jiffy stand retracted, pull the clutch hand lever in against the handlebar grip to fully disengage the clutch.
2. Press the gear shift lever down to the end of its travel and release. The transmission is now in first gear.
3. Ease out the clutch lever and at the same time, gradually open the throttle.

Upshift (Acceleration)

See Shifting Sequence: Upshift. Engage the next higher gear when the motorcycle reaches the shifting speed. Refer to Recommended Upshift Speeds.

Recommended Upshift Speeds

GEAR CHANGE	mph	km/h
First to second	15	25
Second to third	25	40
Third to fourth	35	55
Fourth to fifth	45	70
Fifth to sixth	55	85

1. Close the throttle.
2. Disengage the clutch (pull the clutch lever in).
3. Lift the gear shift lever up to the end of its travel and release.
4. Ease out the clutch lever and gradually open the throttle.
5. Repeat the previous steps to engage remaining gears.

NOTES:

- *Disengage the clutch completely before each gear change.*
- *Partially open the throttle so the engine does not drag when the clutch lever is released.*

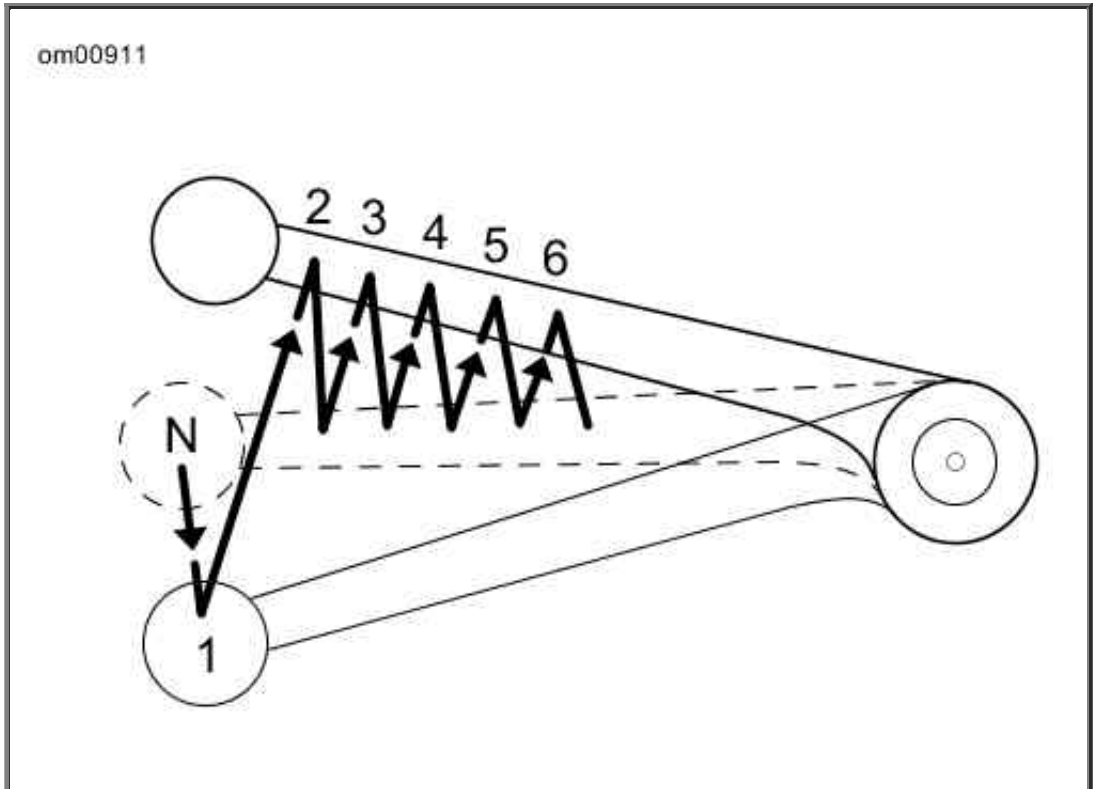

Shifting Sequence: Upshift

Downshift (Deceleration)

⚠WARNING

Do not downshift at speeds higher than those listed. Shifting to lower gears when speed is too high can cause the rear wheel to lose traction and lead to loss of vehicle control, which could result in death or serious injury. (00045b)

See Shifting Sequence: Downshift. When speed decreases, as when climbing a hill or slowing for a turn, shift to the next lower gear. Refer to Recommended Downshift Speeds.

Recommended Downshift Speeds

GEAR CHANGE	mph	km/h
Sixth to fifth	50	80
Fifth to fourth	40	65
Fourth to third	30	50

Fourth to third	30	50
Third to second	20	30
Second to first	10	15

NOTE:

The shifting points shown in the table are recommendations. Vehicle owners may determine that their individual shifting patterns may differ from those stated and are appropriate for individual riding styles.

1. Close the throttle.
2. Disengage the clutch (pull the clutch lever in).
3. Press the gear shift lever down to the end of its travel and release.
4. Ease out the clutch lever and gradually open the throttle.
5. Repeat the previous steps to engage remaining gears.

NOTES:

- *Disengage the clutch completely before each gear change.*
- *Partially open the throttle so the engine does not drag when clutch lever is released.*

CAUTION

Shift to neutral before stopping engine. Shifting mechanism can be damaged by shifting gears while engine is stopped. (00183a)

The gear shifter mechanism permits shifting the transmission to neutral from either first or second gear.

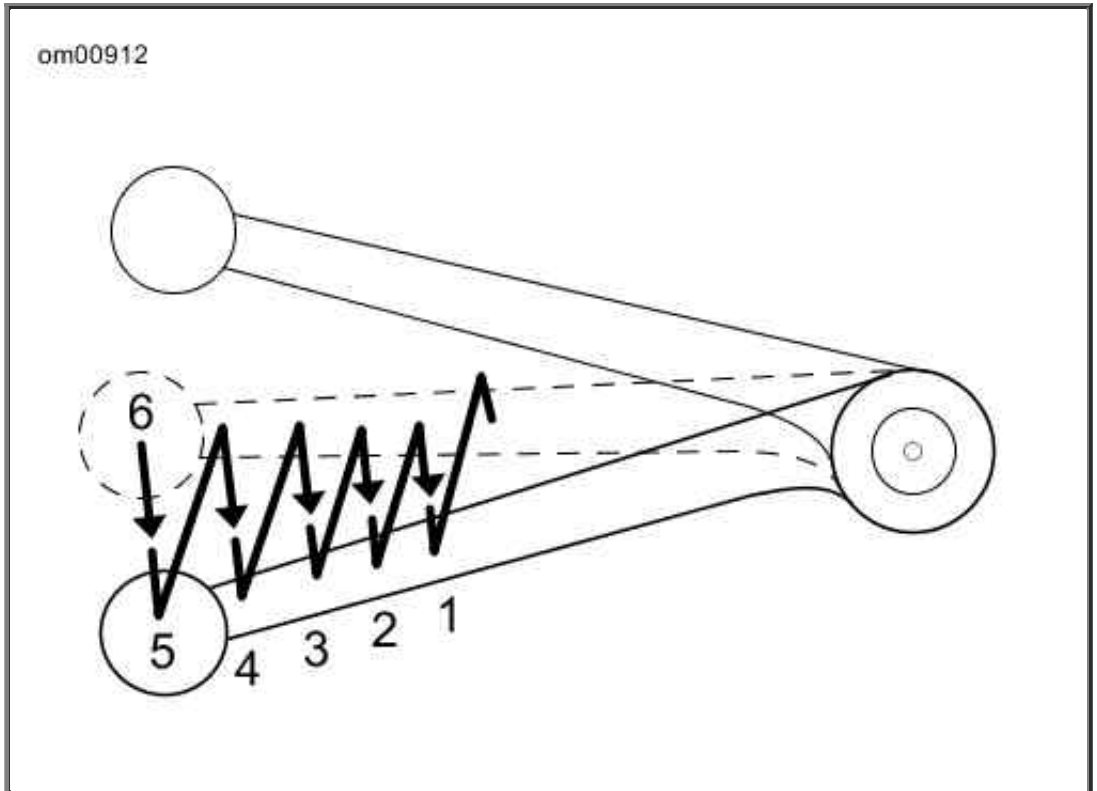

Shifting Sequence: Downshift

Maintenance and Lubrication

Safe Operating Maintenance

⚠WARNING

Perform the service and maintenance operations as indicated in the regular service interval table. Lack of regular maintenance at the recommended intervals can affect the safe operation of your motorcycle, which could result in death or serious injury. (00010a)

⚠WARNING

If you operate your motorcycle under adverse conditions (severe cold, extreme heat, very

dusty environment, very bad roads, through standing water, etc.), you should perform the regular maintenance intervals more frequently to ensure the safe operation of your motorcycle. Failure to maintain your motorcycle could result in death or serious injury. (00094a)

CAUTION

When lifting a motorcycle using a jack, be sure jack contacts both lower frame tubes where down tubes and lower frame tubes converge. Never lift by jacking on cross-members, oil pan, mounting brackets, components or housings. Failure to comply can cause serious damage resulting in the need to perform major repair work. (00586d)

Keep the motorcycle maintained according to Regular Service Intervals: 2016 Harley-Davidson Touring Models. Frequently inspect the motorcycle between regular service intervals and after periods of storage to determine if additional maintenance is necessary.

Check the following items:

1. Tires for correct pressure, excessive wear or any signs of tire damage.
2. Belt for proper tension, wear or damage.
3. Brakes, steering and throttle for responsiveness and freedom from binding.
4. Brake fluid level and condition. Hydraulic lines and fittings for leaks. Coolant level if applicable. Also, check brake pads and discs for wear.
5. Cables for fraying or crimping and free operation.
6. Engine oil and primary chaincase/transmission fluid levels.
7. Headlamp, tail lamp, brake lamp and turn signals for proper operation.

Break-In Maintenance

NOTE:

The performance of new motorcycle initial service is required to keep your new motorcycle warranty in force and for proper emissions system operation.

After a new motorcycle has been ridden 1000 mi 1600 km , visit an authorized Harley-Davidson dealer for initial service. Refer to Regular Service Intervals: 2016 Harley-Davidson Touring Models.

Engine Lubrication

⚠CAUTION

Prolonged or repeated contact with used motor oil may be harmful to skin and could cause skin cancer. Promptly wash affected areas with soap and water. (00358b)

⚠CAUTION

If engine oil is swallowed, do not induce vomiting. Contact a physician immediately. In case of contact with eyes, immediately flush with water. Contact a physician if irritation persists. (00357d)

CAUTION

Do not switch lubricant brands indiscriminately because some lubricants interact chemically when mixed. Use of inferior lubricants can damage the engine. (00184a)

Engine oil is a major factor in the performance and service life of the engine. Use the proper grade of oil for the lowest temperature expected before the next oil change. Refer to Recommended Engine Oils.

This motorcycle was originally equipped with GENUINE HARLEY-DAVIDSON H-D 360 MOTORCYCLE OIL 20W50. H-D 360 is the preferred oil under normal operating conditions. If operation under extreme cold or heat are expected, refer to Recommended Engine Oils for alternative choices.

If H-D 360 is not available, add oil certified for diesel engines. Acceptable designations include: CH-4, CI-4 and CJ-4. The preferred viscosities, in descending order are: 20W50, 15W40 and 10W40.

At the first opportunity, see an authorized dealer to change back to 100 percent Harley-Davidson oil.

Recommended Engine Oils

TYPE	VISCOSITY	RATING	LOWEST AMBIENT TEMPERATURE	COLD-WEATHER STARTS BELOW 50 °F (10 °C)
Screamin' Eagle SYN 3 Full Synthetic Motorcycle Lubricant	SAE 20W50	HD 360	Above 30 °F -1 °C	Excellent
Genuine Harley-Davidson H-D 360 Motorcycle Oil	SAE 20W50	HD 360	Above 40 °F 4 °C	Good
Genuine Harley-Davidson H-D 360 Motorcycle Oil	SAE 50	HD 360	Above 60 °F 16 °C	Poor
Genuine Harley-Davidson H-D 360 Motorcycle Oil	SAE 60	HD 360	Above 80 °F 27 °C	Poor
Genuine Harley-Davidson H-D 360 Motorcycle Oil	SAE 10W40	HD 360	Below 40 °F 4 °C	Excellent

Disposal and Recycling

Help protect our environment! Many communities maintain facilities for recycling used fluids, plastics and metals. Dispose of or recycle used oil, lubricants, fuel, coolant, brake fluid and batteries in accordance with local regulations. Many Harley-Davidson parts and accessories are made of plastics and metals which can also be recycled.

Engine Oil Level

⚠CAUTION

Prolonged or repeated contact with used motor oil may be harmful to skin and could cause skin cancer. Promptly wash affected areas with soap and water. (00358b)

CAUTION

Do not overfill oil. Doing so can result in oil carryover to the air cleaner leading to equipment damage and/or equipment malfunction. (00190b)

NOTE:

The oil level marks for checking with motorcycle upright or on jiffy stand are on the same side of the dipstick. Carefully read dipstick when checking oil level.

Check engine oil level at each complete fuel refill.

Oil Level Cold Check

---

1. For pre-ride inspection, place vehicle on level ground resting on its jiffy stand.
2. See Engine Oil Filler Plug. Remove filler plug/dipstick. Wipe off the dipstick. Insert the dipstick and tighten into the fill spout.

   NOTE:

   Oil level on a cold engine should never be above the midway point.
3. See Engine Oil Dipstick. Remove filler plug/dipstick and check oil level. The correct oil level is midway (2) between the ADD QT (1) and FULL HOT (3) marks on the dipstick.

NOTE:

If oil level is at or below the ADD QT mark, add only enough oil to bring the level midway (2) between the ADD QT and FULL HOT marks. Never bring the level to the FULL HOT mark on a cold engine.

Oil Level Hot Check

CAUTION

Do not allow hot oil level to fall below Add/Fill mark on dipstick. Doing so can result in equipment damage and/or equipment malfunction. (00189a)

NOTE:

Perform engine oil level hot check only with engine oil at normal operating temperature.

1. Ride motorcycle until engine oil is at normal operating temperature 200 °F 93 °C or higher.
2. Allow engine to idle for 1-2 minutes. Turn off engine.
3. See Engine Oil Filler Plug. Remove filler plug/dipstick. Wipe off the dipstick. Insert the dipstick and tighten into the fill spout.
4. See Engine Oil Dipstick. Remove filler plug/dipstick and check oil level. Oil level must register between the ADD QT (1) and FULL HOT (3) marks. If oil level is at or below the ADD QT mark, add only enough oil to bring the level to the FULL HOT mark. Do not overfill.

   NOTE:

   Use only recommended oil. See Engine Lubrication.

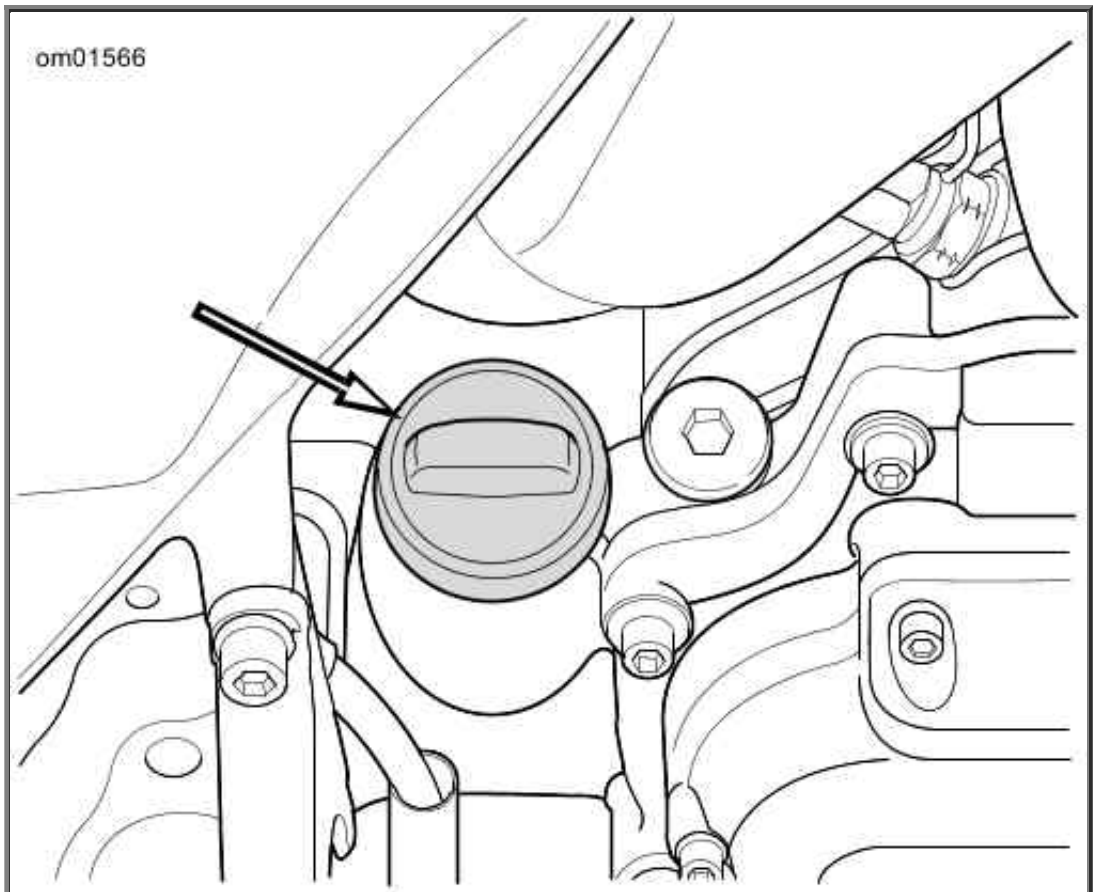

Engine Oil Filler Plug

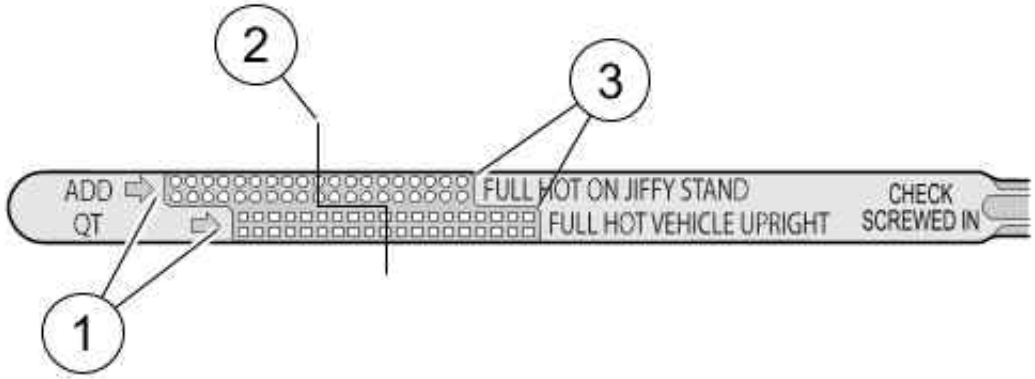

1. ADD QT (lower) mark
2. Cold check level
3. FULL (hot check) mark

Engine Oil Dipstick

Changing Oil and Oil Filter

Change engine oil at the first 1000 mi 1600 km for a **new** engine. After the initial service, change oil at regular intervals in normal service at warm or moderate temperatures. Refer to Regular Service Intervals: 2016 Harley-Davidson Touring Models.

Change oil at more frequent intervals in cold weather or severe operating conditions. See Winter Lubrication.

Twin Cam equipped vehicles require the premium oil filter, available in chrome (Part No. 63798-99A) or black (Part No. 63731-99A).

⚠WARNING

Be sure that no lubricants or fluids get on tires, wheels or brakes when changing fluid. Traction can be adversely affected, which could result in loss of control of the motorcycle and death or serious injury. (00047d)

CAUTION

Do not switch lubricant brands indiscriminately because some lubricants interact chemically when mixed. Use of inferior lubricants can damage the engine. (00184a)

1. Run motorcycle until engine is at normal operating temperature. Turn off engine.
2. Remove filler plug/dipstick.

NOTE:

Replace drain plug O-ring if damaged.

3. See Oil Pan. Remove the oil drain plug (2) and O-ring. Allow oil to drain completely.

CAUTION

Use Harley-Davidson oil filter wrench for filter removal. This tool can prevent damage to crankshaft position sensor and/or sensor cable. (00192b)

4. Remove the oil filter using OIL FILTER WRENCH HD-42311 or OIL FILTER WRENCH HD-44067A and hand tools. Do not use with air tools.
5. Clean the oil filter mount flange.
6. See Applying Thin Oil Film. Install **new** oil filter.
    a. Lubricate gasket with a thin film of clean engine oil.
    b. Install **new** oil filter.
    c. Hand-tighten oil filter one-half to three-quarters of a turn after gasket first contacts filter mounting surface. Do NOT use oil filter wrench for installation.
7. Install engine oil drain plug and O-ring. Tighten to 14-21 ft-lbs (19.0-28.5 Nm).

    NOTE:

    Use the proper grade of oil for the lowest temperature expected before the next oil change. Refer to Recommended Engine Oils for recommended oil.

8. Add an initial volume of engine oil. Refer to Capacities.
9. Verify proper oil level. See Engine Oil Level.
    a. Perform engine oil level **cold check**.
    b. Start engine and carefully check for oil leaks around drain plug and oil filter.
    c. Perform engine oil level **hot check**.

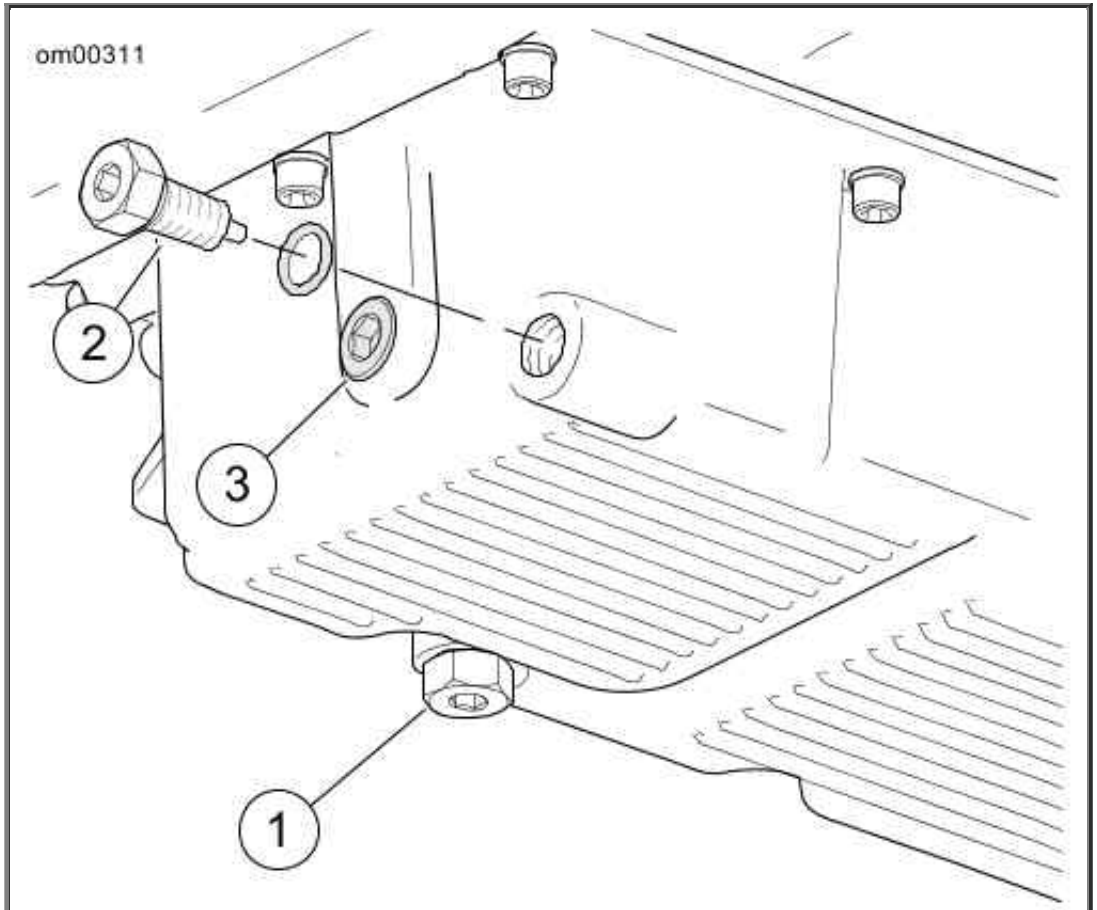

1. Transmission drain plug (right side)
2. Engine oil drain plug and O-ring
3. Hex plug (do not remove)

Oil Pan

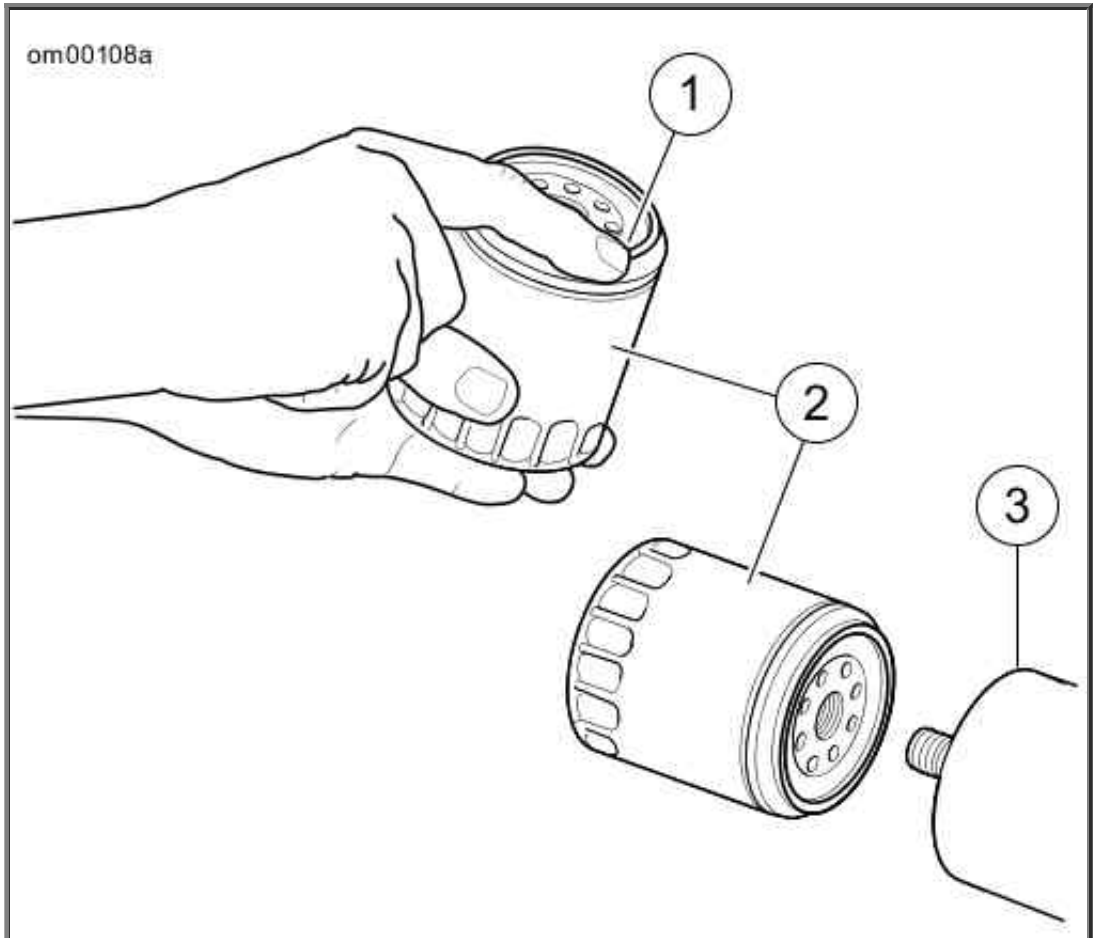

1. Thin film of oil ONLY
2. Oil filter
3. Mounting plate

Applying Thin Oil Film

Winter Lubrication

Change engine oil often in colder climates. If motorcycle is frequently used for trips less than 15 mi 24 km , in ambient temperatures below 60 °F 16 °C , reduce oil change intervals to 1500 mi 2400 km .

NOTE:

Lower ambient temperatures require more frequent oil changes.

Water vapor is a normal by-product of combustion. During cold-weather operation, some water vapor condenses to liquid form on the cool surfaces inside the engine. In freezing weather this water becomes slush or ice. If the engine is not warmed to operating temperature, accumulated slush or ice blocks the oil

lines and causes engine damage. Over time, water will accumulate, mix with the engine oil and form a sludge that is harmful to the engine.

If the engine is allowed to warm to normal operating temperature, most of the water evaporates and exits through the crankcase breather.

Oil Cooler

Motorcycles with an air-cooled Twin Cam 103 or larger engine have an oil cooler. Keep the cooler clean and free from dirt and debris to maintain maximum cooling efficiency.

Checking Transmission Lubricant

NOTE:

Check transmission fluid with the motorcycle at ambient temperature.

1. Park motorcycle on a level surface on jiffy stand.
2. See Transmission Filler Plug/Dipstick Location. Remove transmission filler plug/dipstick. Wipe dipstick clean.
3. Install filler plug/dipstick until O-ring contacts the case. Do not tighten.
4. See Transmission Lubricant Level. Remove filler plug/dipstick. Check lubricant level on dipstick.

CAUTION

Mixing mineral-based lubricants with SYN-3 in the transmission can damage the transmission. (00452b)

5. Proper oil level is between the Add (A) (1) and Full (F) (2) marks. Add only enough lubricant to bring level to between the A mark and the F marks. Refer to Recommended Transmission Lubricants.
6. Install filler plug/dipstick. Tighten to 25-75 in-lbs (2.8-8.5 Nm).

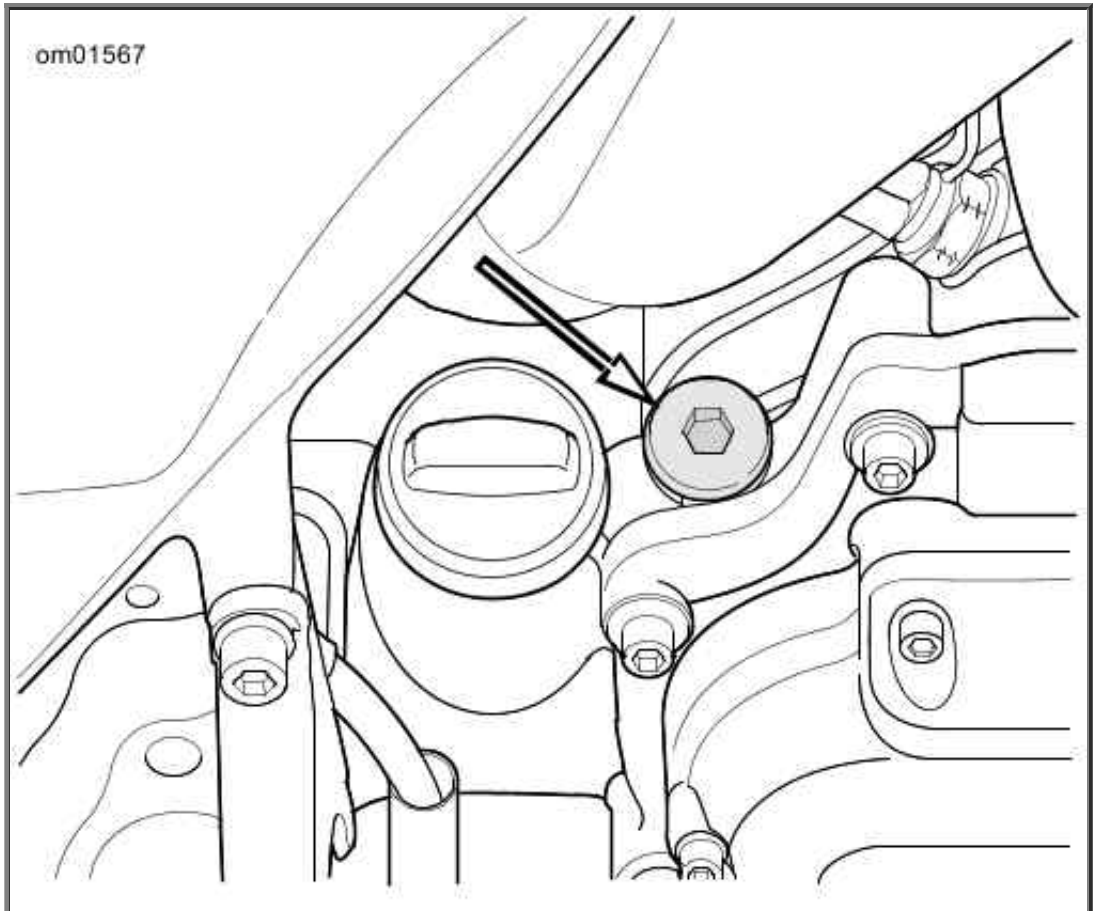

Transmission Filler Plug/Dipstick Location

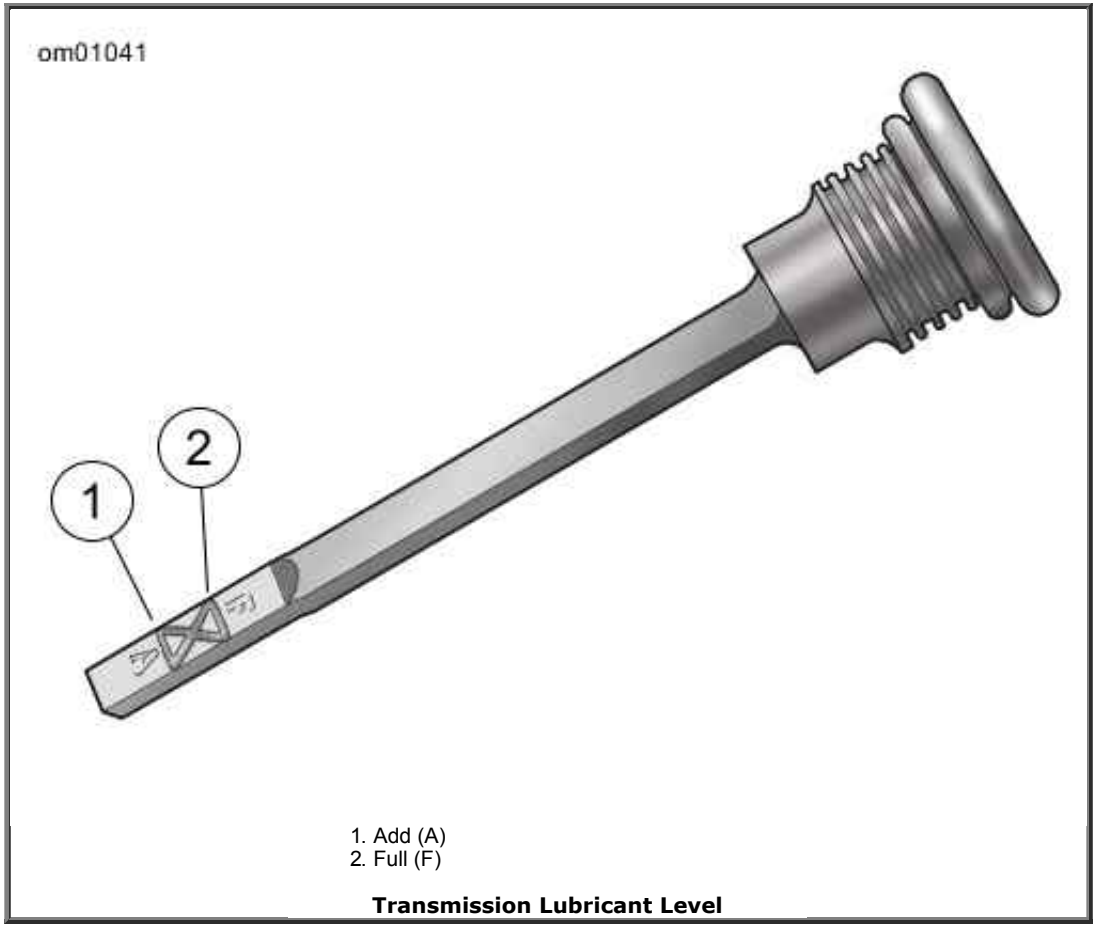

1. Add (A)
2. Full (F)

Transmission Lubricant Level

Recommended Transmission Lubricants

LUBRICANT	QUANTITY *	
	fl oz	L
FORMULA+ TRANSMISSION AND PRIMARY CHAINCASE LUBRICANT	28	0.83
SCREAMIN' EAGLE SYN3 FULL SYNTHETIC MOTORCYCLE LUBRICANT 20W50	28	0.83
* Fill quantity for a transmission lubricant change.		

Changing Transmission Lubricant

1. See Transmission Filler Plug/Dipstick Location. Remove transmission filler plug/dipstick.

⚠WARNING

Be sure that no lubricants or fluids get on tires, wheels or brakes when changing fluid. Traction can be adversely affected, which could result in loss of control of the motorcycle and death or serious injury. (00047d)

CAUTION

When draining or adding lubricant, do not allow dirt, debris or other contaminants to enter the engine. (00198a)

2. See Oil Pan. Remove transmission drain plug. Drain transmission.
3. Clean and inspect drain plug and O-ring.

CAUTION

Do not over-tighten filler or drain plug. Doing so could result in a lubricant leak. (00200b)

4. Install drain plug with O-ring. Tighten to 14-21 ft-lbs (19.0-28.5 Nm). Do not over-tighten.
5. Fill the transmission with 28 oz 0.83 L of recommended Harley-Davidson lubricant. Refer to Recommended Transmission Lubricants.
6. Check lubricant level. Add enough lubricant to bring the level between the add (A) and full (F) marks. See Checking Transmission Lubricant.
7. Install filler plug/dipstick. Tighten to 25-75 in-lbs (2.8-8.5 Nm).

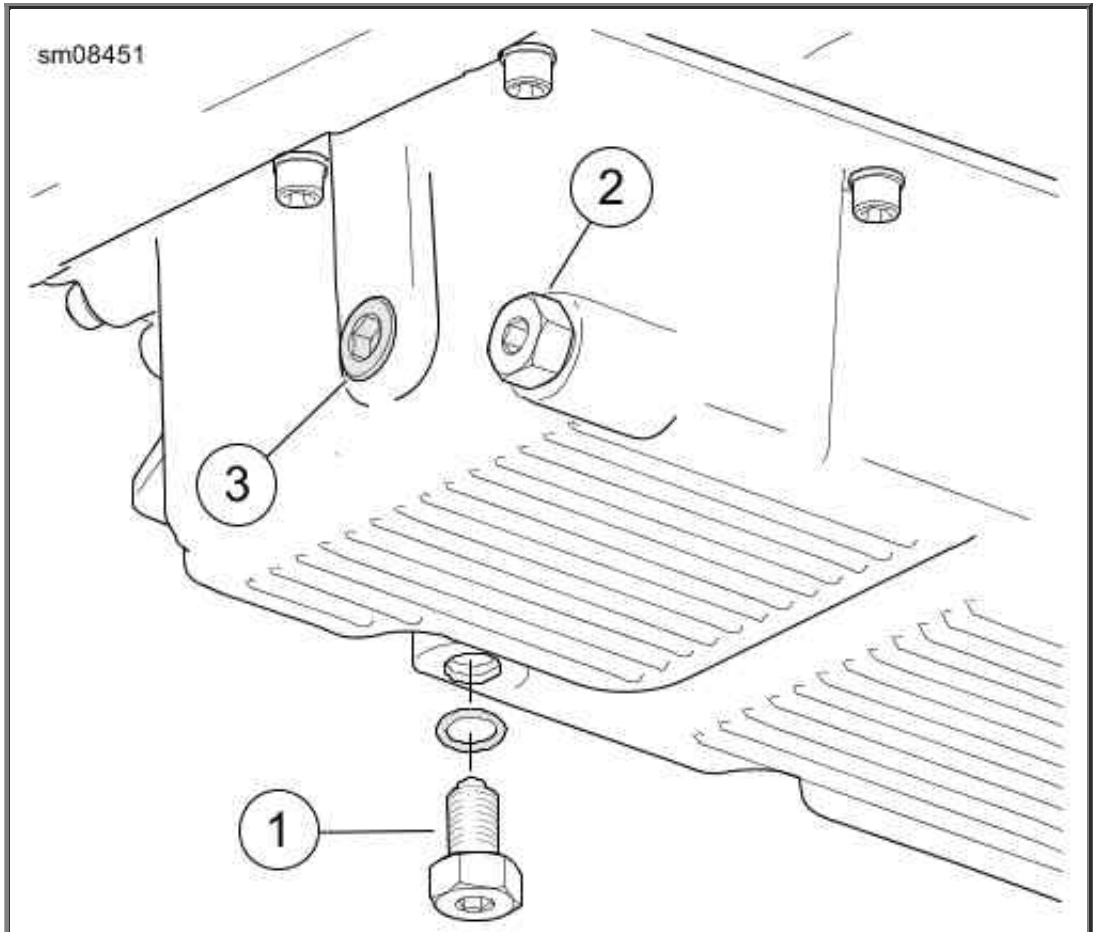

1. Transmission drain plug (right side)
2. Engine oil drain plug and O-ring
3. Hex plug (do not remove)

Oil Pan

Changing Primary Chaincase Lubricant

1. Run motorcycle until engine is at normal operating temperature. Turn off engine.

⚠WARNING

Be sure that no lubricants or fluids get on tires, wheels or brakes when changing fluid.

Traction can be adversely affected, which could result in loss of control of the motorcycle and death or serious injury. (00047d)

CAUTION

When draining or adding lubricant, do not allow dirt, debris or other contaminants to enter the engine. (00198a)

2. See Removal/Installation of Chaincase Drain Plug. Drain primary chaincase.
3. Clean drain plug. If plug has accumulated excessive debris, inspect the condition of chaincase components.
4. Install **new** O-ring on drain plug.
5. Install drain plug. Tighten to 14-21 ft-lbs (19.0-28.5 Nm).

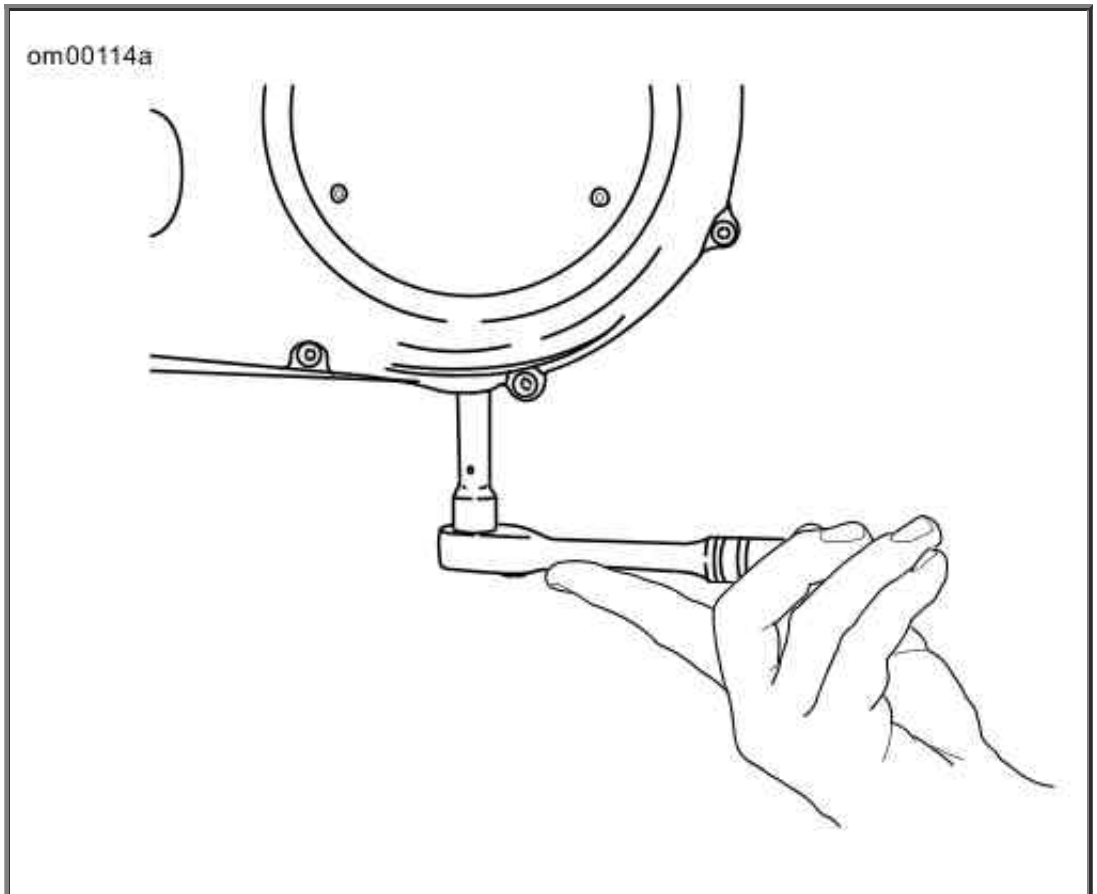

Removal/Installation of Chaincase Drain Plug

6. See Clutch Cover. Remove screws with captive washers (3) and clutch inspection cover (2).

7. Remove seal (1). Wipe oil from groove in chaincase cover and mounting surface.

CAUTION

Do not overfill the primary chaincase with lubricant. Overfilling can cause rough clutch engagement, incomplete disengagement, clutch drag and/or difficulty in finding neutral at engine idle. (00199b)

8. Stand motorcycle upright (not leaning on jiffy stand) on a level surface.
9. Pour specified amount of FORMULA+ TRANSMISSION AND PRIMARY CHAINCASE LUBRICANT through clutch inspection cover opening. Refer to Primary Chaincase Lubricant Refill Capacity.

Primary Chaincase Lubricant Refill Capacity

CONDITION	CAPACITY	
	fl oz	L
Wet	34	1.0
Dry *	38	1.1
* Quantity after complete disassembly.		

10. Install clutch inspection cover and **new** seal:
    a. Thoroughly wipe all lubricant from cover mounting surface and groove in chaincase cover.
    b. See Clutch Cover. Position **new** seal (1) in groove in clutch inspection cover (2). Press each of the nubs on seal into the groove.
    c. Secure clutch inspection cover (2) with screws with captive washers (3).
    d. See Clutch Cover Torque Sequence. Tighten in sequence shown to 84-108 in-lbs (9.5-12.2 Nm).

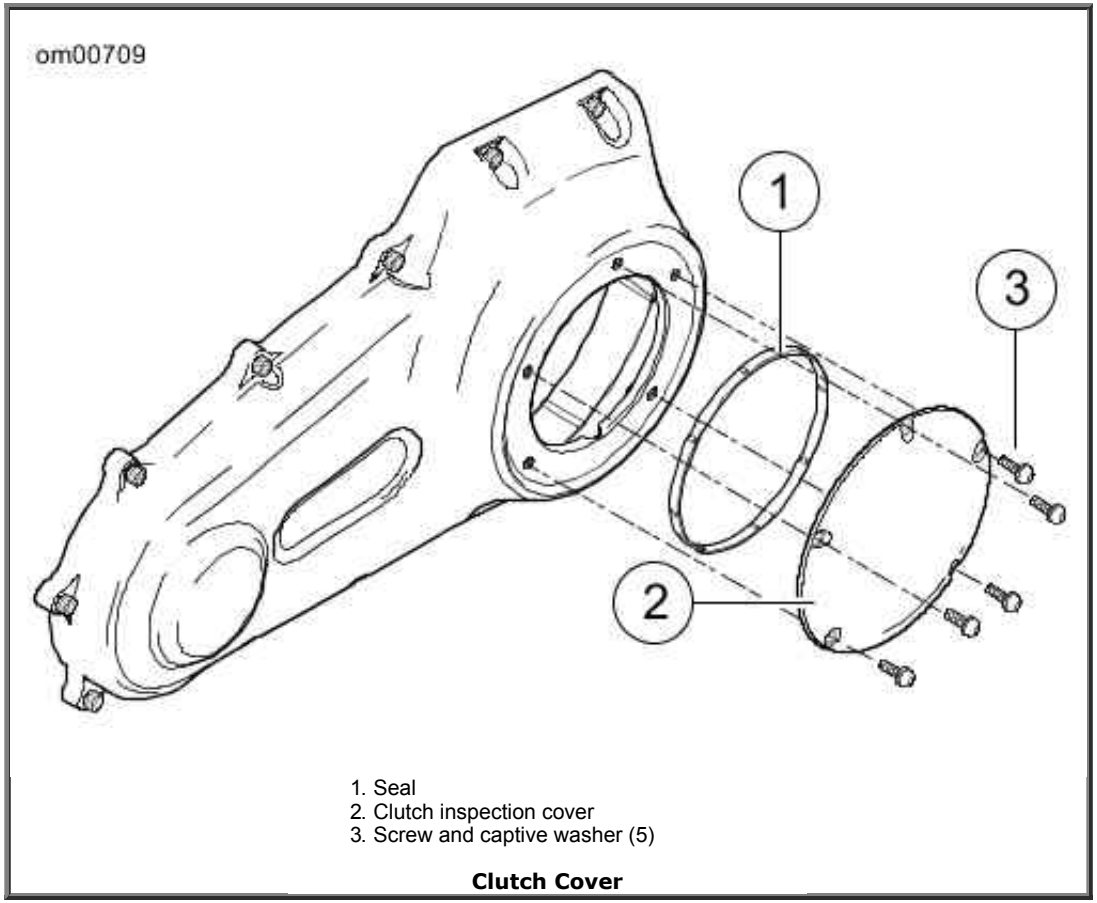

1. Seal
2. Clutch inspection cover
3. Screw and captive washer (5)

Clutch Cover

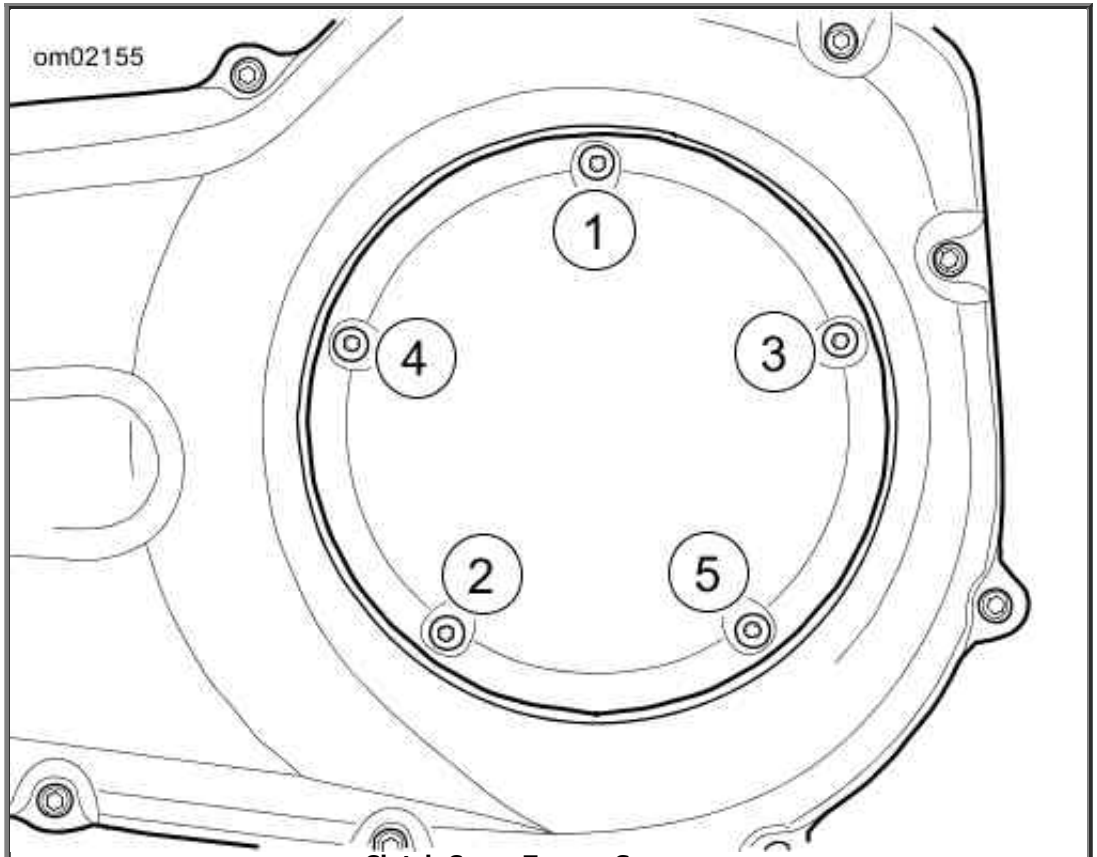

Clutch Cover Torque Sequence

Cooling System

WARNING

Coolant mixture contains toxic chemicals, which may be fatal if swallowed. If swallowed, do not induce vomiting; call a physician immediately. Use in a well ventilated area. Irritation to skin or eyes can occur from vapors or direct contact. In case of skin or eye contact, flush thoroughly with water and go to hospital, if necessary. Dispose of used coolant according to federal, state and local regulations. (00092a)

CAUTION

At operating temperature, radiators and oil coolers contain hot fluids. Contact with a radiator or oil cooler can result in minor or moderate burns. (00141b)

CAUTION

Use only Genuine Harley-Davidson Extended Life Antifreeze and Coolant. Use of other coolants/mixtures may lead to engine damage. (00179b)

GENUINE HARLEY-DAVIDSON EXTENDED LIFE ANTIFREEZE AND COOLANT is pre-diluted and ready to use full strength. It provides temperature protection to -34 °F -36.7 °C . DO NOT add water.

CAUTION

De-ionized water must be used with the antifreeze in the cooling system. Hard water can cause scale accumulation in water passages which reduces cooling system efficiency, leading to overheating and engine damage. (00195a)

If GENUINE HARLEY-DAVIDSON EXTENDED LIFE ANTIFREEZE AND COOLANT is unavailable, a mixture of de-ionized water and ethylene glycol-based antifreeze may be used. At the first opportunity, change back to GENUINE HARLEY-DAVIDSON EXTENDED LIFE ANTIFREEZE AND COOLANT.

Checking Coolant Level

NOTE:

Check coolant level with engine cold and motorcycle on level ground.

1. Remove access panel from lower right fairing. Pry the center top and pull out to release retainers.

   NOTE:

   See Coolant Level. The coolant bottle has two lines. Use the angled line (2) when the motorcycle is leaning on the jiffy stand.

2. See Coolant Level. Check that coolant level in coolant bottle is at or slightly above the "COLD" line (1).

   NOTES:
   - *Do not remove the pressure cap (4). Fill the coolant bottle by removing the rubber plug (3).*
   - *If the coolant bottle is empty when the engine is cold, inspect the system for leaks. Repair as needed. Fill system with coolant and perform bleed procedure. See a Harley-Davidson dealer for service.*

3. If level is below "COLD" line on tank, remove rubber plug (3). Add GENUINE HARLEY-DAVIDSON EXTENDED LIFE ANTIFREEZE AND COOLANT until fluid level reaches, or is slightly above the "COLD" line.

4. Install rubber plug.

5. Install access panel.

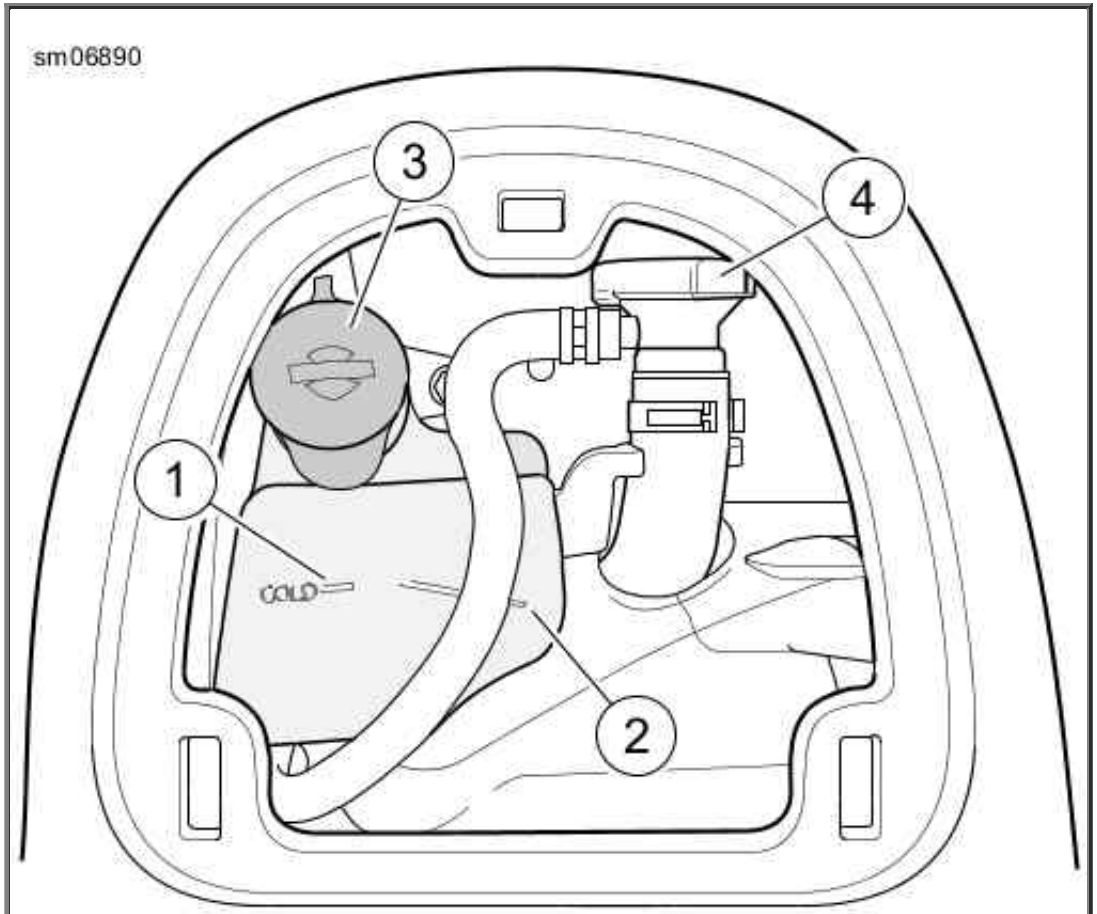

1. Cold full line, vehicle upright
2. Cold full line, vehicle on jiffy stand
3. Rubber plug
4. Pressure cap

Coolant Level

Clean Radiators

CAUTION

Clean the inlet surface of the radiator regularly. Leaves and other debris can collect on the radiator surface and degrade radiator performance which could lead to engine overheating and engine damage. (00197c)

1. See Lower Fairing Grille Panel. Remove outer grille from lower fairing.
    a. Carefully pry on curved edge of panel to release latches.
    b. Remove from fascia.
2. Clean debris from radiator fins.
3. Install outer grille.

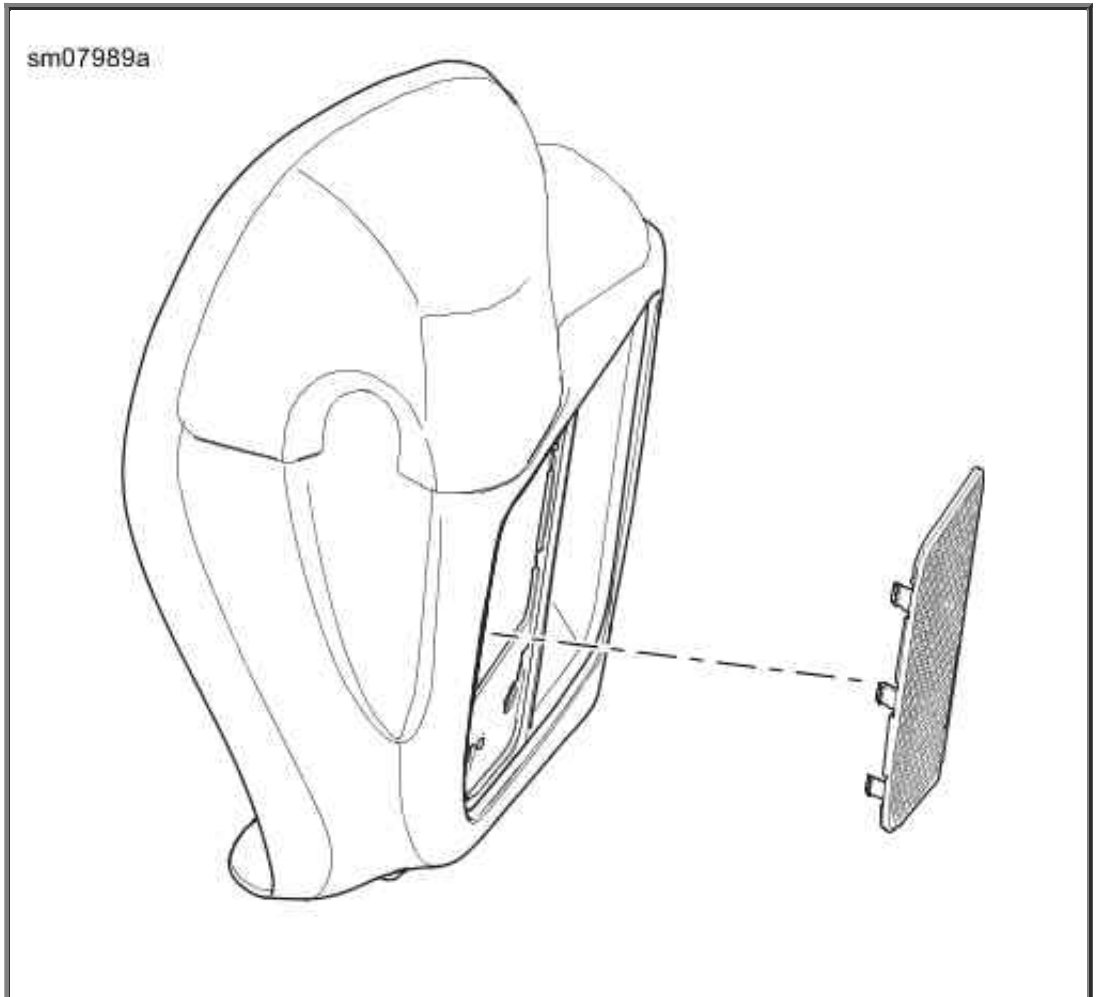

Lower Fairing Grille Panel

Checking Drive Belt Deflection

NOTE:

Always use BELT TENSION GAUGE HD-35381-A to measure belt deflection. Failure to use tension gauge may cause under-tensioned belts. Loose belts can fail due to "ratcheting" (jumping a tooth) which causes tensile cord crimping and breakage.

Check deflection:

- As part of pre-ride inspection.
- At every scheduled service interval.
- With transmission in neutral.
- With motorcycle at ambient temperature.
- With motorcycle upright or on jiffy stand with rear wheel on the ground.
- With the vehicle unladen: no rider, no luggage and saddlebags, if equipped, empty.

⚠WARNING

To prevent accidental vehicle start-up, which could cause death or serious injury, remove main fuse before proceeding. (00251b)

1. Disarm security system. Remove main fuse. See Fuses and Relays.
2. See Belt Tension Gauge. Obtain H-D BELT TENSION GAUGE HD-35381-A .

   NOTE:

   Gauge is available from an authorized Harley-Davidson dealer.
3. To use the belt tension gauge:
   a. Slide O-ring (4) to 0 lb 0 kg mark (3).
   b. **Models equipped with belt deflection window:** Fit belt cradle (2) against bottom of drive belt in line with belt deflection window.
   c. **All other models:** Fit belt cradle (2) against bottom of drive belt halfway between drive pulleys.
   d. Press upward on knob (6) until O-ring slides down to 10 lb 4.5 kg mark (5) and hold steady.
4. Measure belt deflection:
   a. **Models equipped with belt deflection window:** See Belt Deflection Window. Measure belt deflection as viewed through belt deflection viewing window while holding gauge steady. Each deflection graduation is approximately 1/16 in 1.59 mm .
   b. **All other models:** See Checking Belt Deflection. Measure amount of deflection (4) while holding gauge steady.
5. Compare with specifications. Adjust as necessary. Refer to Belt Deflection.
6. Install main fuse.

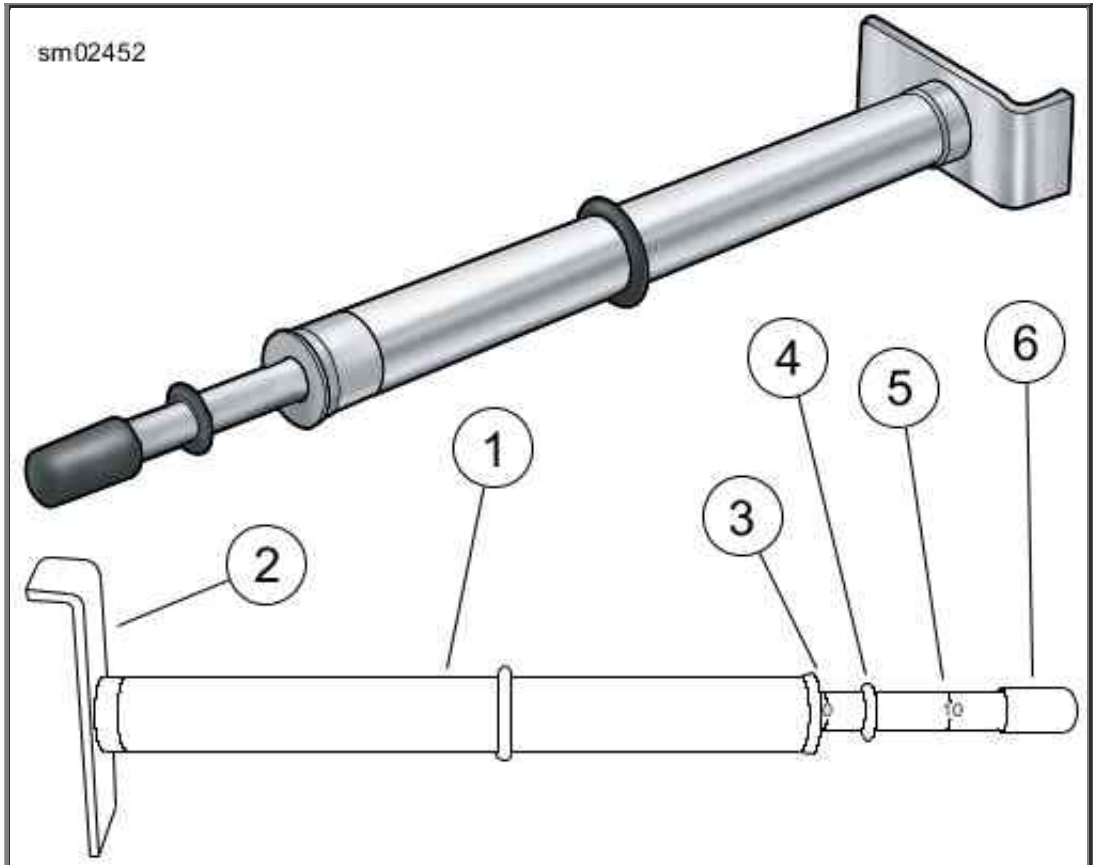

1. Belt tension gauge
2. Belt cradle
3. 0 lb (0 kg) mark
4. O-ring
5. 10 lb (4.5 kg) mark
6. Knob

Belt Tension Gauge

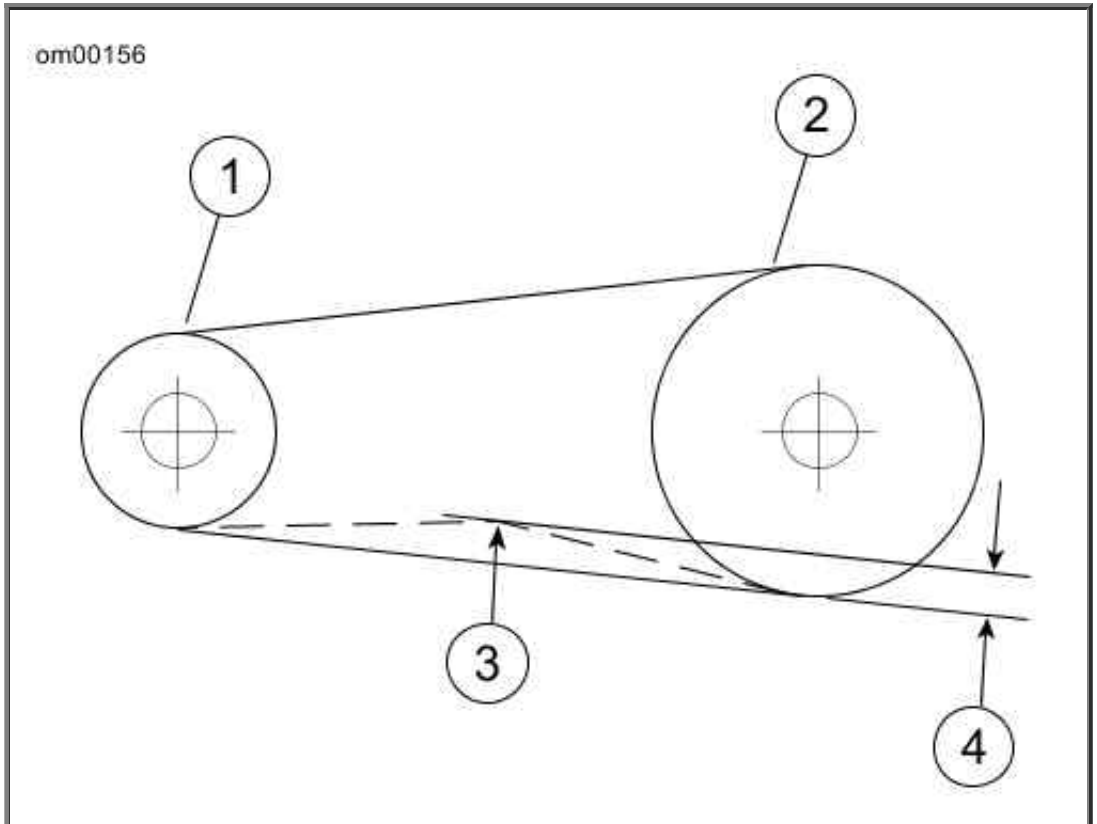

1. Transmission sprocket
2. Rear wheel sprocket
3. 10 lb (4.5 kg) of force
4. Amount of deflection

Checking Belt Deflection

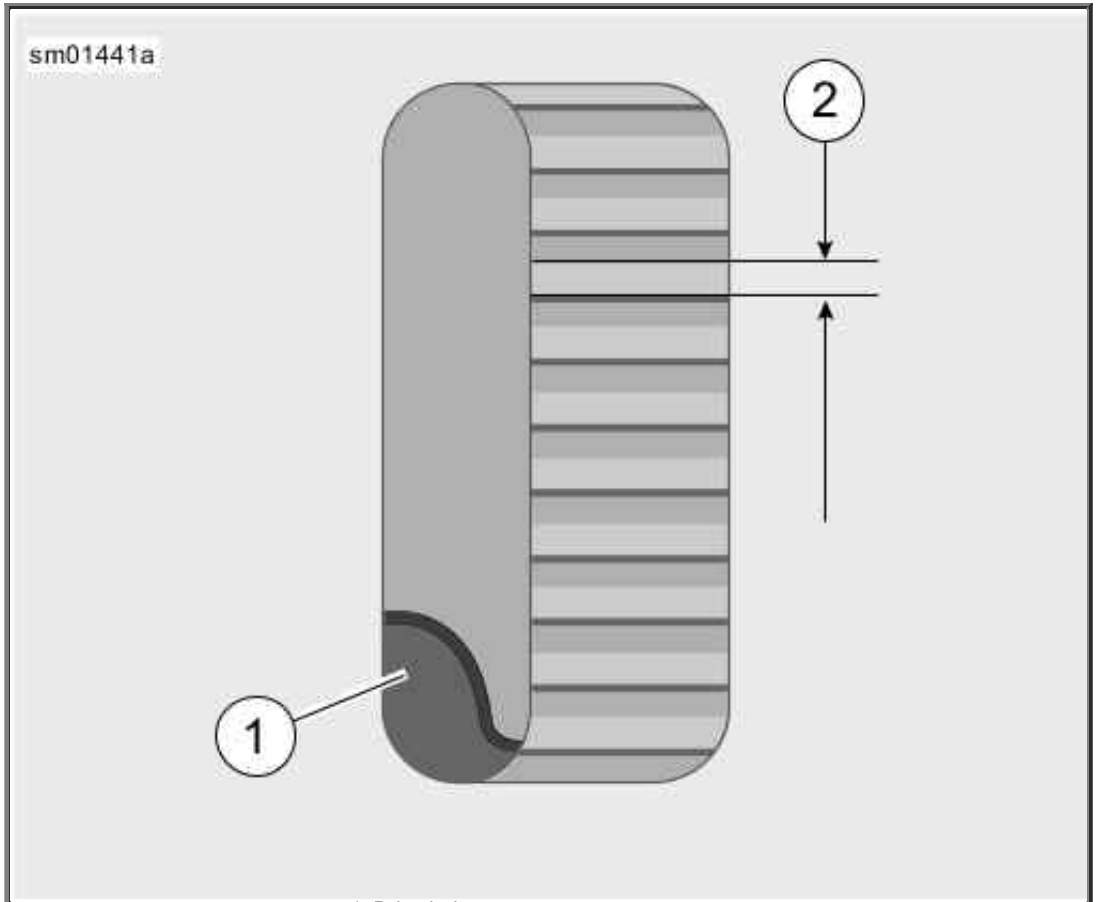

1. Drive belt
2. Deflection graduation

Belt Deflection Window

Belt Deflection

MODEL	in	mm
FLHR, FLHRC, FLHTCU, FLHTK, FLTRU (standard shock absorbers)	3/8-9/16	9.5-14.3
FLHTCUL, FLHTKL, FLHX, FLHXS, FLTRX, FLTRXS (low profile shock absorbers)	1/4-7/16	6.4-11.1

Chassis Lubrication

Inspect and lubricate the following components according to the maintenance schedule. Refer to Regular Service Intervals: 2016 Harley-Davidson Touring Models.

- Front brake lever pivot
- Clutch control hand lever pivot
- Foot shift lever pivot
- Rear brake lever pivot
- Hinges and latches (such as fuel door and footrests)
- Locks, as required
- Jiffy stand (use ANTI-SEIZE LUBRICANT)

Use HARLEY LUBE unless otherwise specified.

If motorcycle is operated on muddy or dusty roads, clean and lubricate more frequently.

Oil Applications

Lubricate motorcycle at regular intervals, particularly after washing motorcycle or driving in wet weather. Refer to Regular Service Intervals: 2016 Harley-Davidson Touring Models.

Front Fork Oil

Have a Harley-Davidson dealer service the front fork at the specified intervals. If fork does not appear to be working properly or an appreciable amount of oil leakage develops, see a Harley-Davidson dealer. If there is insufficient oil in either side of fork, the rebound action will be incorrect. Refer to Regular Service Intervals: 2016 Harley-Davidson Touring Models.

Clutch

Refer to Regular Service Intervals: 2016 Harley-Davidson Touring Models. Maintain the clutch at specified intervals. If the clutch is not operating properly, see a Harley-Davidson dealer for service.

FLHR, FLHRC: See Mechanical Clutch.

Other models: See Hydraulic Clutch.

Mechanical Clutch

CAUTION

The clutch control cable must be oiled and adjusted periodically to compensate for lining wear. See MAINTENANCE SCHEDULING in this manual. Failure to oil and adjust the clutch control cable can result in equipment damage. (00203b)

Adjust the clutch control cable at specified intervals. Refer to Regular Service Intervals: 2016 Harley-Davidson Touring Models.

If the clutch slips under load or drags when released, the control cable may need to be adjusted or clutch service may need to be performed. See a Harley-

Davidson dealer for service.

Hydraulic Clutch

Check clutch fluid level at specified intervals. Refer to Regular Service Intervals: 2016 Harley-Davidson Touring Models.

NOTE:

Clutch fluid should never need to be added or removed from the system during normal wear.

1. Position vehicle on a flat, level surface. Level the master cylinder by turning the handlebar and/or standing the motorcycle upright (not leaning on jiffy stand).
2. See Clutch Reservoir Sight Glass. View reservoir sight glass. Verify fluid presence. Sight glass appears dark if fluid is present. If the entire sight glass is not dark then proceed to the next step.

⚠CAUTION

Direct contact of D.O.T. 4 brake fluid with eyes can cause irritation. Avoid eye contact. In case of eye contact flush with large amounts of water and get medical attention. Swallowing large amounts of D.O.T. 4 brake fluid can cause digestive discomfort. If swallowed, obtain medical attention. Use in well ventilated area. KEEP OUT OF REACH OF CHILDREN. (00240a)

CAUTION

Do not allow dirt or debris to enter the master cylinder reservoir. Dirt or debris in the reservoir can cause improper operation and equipment damage. (00205c)

CAUTION

D.O.T. 4 brake fluid will damage painted and body panel surfaces it comes in contact with. Always use caution and protect surfaces from spills whenever brake work is performed. Failure to comply can result in cosmetic damage. (00239b)

NOTE:

If DOT 4 brake fluid contacts painted surfaces, IMMEDIATELY flush area with clear water.

3. Clean all dirt and debris from the clutch master cylinder cover. Remove the two clutch master cylinder cover screws. Remove the cover.

CAUTION

D.O.T. 4 hydraulic brake fluid is used in the hydraulic clutch. Do not use other types of fluids as they are not compatible and could cause equipment damage. (00353a)

NOTES:

- *Do **not** exceed FILL level. Clutch fluid volume increases with clutch wear. Over-filling can damage seals and damage clutch system.*
- *If fluid level is substantially above the FILL level, a worn clutch may be the cause.*
- *Check that clutch hand lever returns completely. If lever does not return completely, problems similar to over-filling can result.*

4. Verify that the fluid level in the clutch master cylinder reservoir is at the FILL level mark at the top of the ledge on the rear inside wall of the reservoir. If the fluid level is low, add DOT 4 BRAKE FLUID which is approved for clutch system use and available from a Harley-Davidson dealer.

5. Inspect the clutch master cylinder cover gasket for rips, cuts, cracks or other signs of damage. Replace the gasket if necessary. Carefully place the cover and cover gasket on the master cylinder reservoir. Secure with the two cover screws. Tighten to 8-10 in-lbs (0.9-1.1 Nm).

   NOTE:

   If the fluid level is correct but the clutch does not operate properly, refer to the service manual or see a Harley-Davidson dealer for service.

Clutch Reservoir Sight Glass

Hydraulic Lifters

The hydraulic lifters are self-adjusting. They automatically adjust length to compensate for engine expansion and valve mechanism wear. This keeps the valve mechanism free of lash when the engine is running.

When starting an engine which has been turned off even for a few minutes, the valve mechanism may be slightly noisy until the hydraulic units completely

refill with oil. If at any time the valve mechanism becomes abnormally noisy, other than for a short period immediately after engine is started, it is an indication that one or more of the hydraulic units may not be functioning properly.

Always check the engine oil level first since normal circulation of oil through the engine is necessary for proper operation of the hydraulic lifters.

If engine oil is at the proper level, the lifters may not be functioning properly because of dirt in the oil supply passages leading to the lifter units. See a Harley-Davidson dealer for service.

Steering Head Bearings

⚠WARNING

Adjustments to steering head bearings should be performed by a Harley-Davidson dealer. Improperly adjusted bearings can adversely affect handling and stability, which could result in death or serious injury. (00051b)

Service the steering head bearings at proper intervals. Refer to Regular Service Intervals: 2016 Harley-Davidson Touring Models.

With motorcycle front end raised off the floor, make sure that the front fork turns freely without any binding or interference. Make sure that there is no appreciable front to rear fork movement indicating excessive bearing looseness. If necessary, adjust the steering head bearings according to the service manual procedure. See a Harley-Davidson dealer.

Brakes

Inspect brake fluid level and check brake pads and discs for wear at proper intervals. Refer to Regular Service Intervals: 2016 Harley-Davidson Touring Models.

Brake Fluid

⚠WARNING

Clean reservoir filler cap or cover before removing. Use only DOT 4 brake fluid from a sealed container. Contaminated fluid can adversely affect braking or clutch disengagement, which could result in death or serious injury. (00504d)

⚠CAUTION

Direct contact of D.O.T. 4 brake fluid with eyes can cause irritation. Avoid eye contact. In case of eye contact flush with large amounts of water and get medical attention. Swallowing large amounts of D.O.T. 4 brake fluid can cause digestive discomfort. If swallowed, obtain medical attention. Use in well ventilated area. KEEP OUT OF REACH OF CHILDREN. (00240a)

CAUTION

D.O.T. 4 brake fluid will damage painted and body panel surfaces it comes in contact with. Always use caution and protect surfaces from spills whenever brake work is performed. Failure to comply can result in cosmetic damage. (00239b)

- **If DOT 4 brake fluid contacts painted surfaces, IMMEDIATELY flush area with clear water.**

CAUTION

Do not allow dirt or debris to enter the master cylinder reservoir. Dirt or debris in the reservoir can cause improper operation and equipment damage. (00205c)

NOTES:

- *If the brake system is not leaking, there should never be a need to add fluid. If the fluid level is low, the pads are probably worn. By replacing the pads, the fluid level will return to its normal level.*
- *Use only DOT 4 brake fluid and replace the brake fluid every two years. See a Harley-Davidson dealer.*

1. Place vehicle on a flat level surface.
    a. **Front brake:** Level the master cylinder by turning the handlebar and/or standing the motorcycle upright (not leaning on jiffy stand).
    b. **Rear brake:** Position the motorcycle so the master cylinder reservoir is level.
2. See Sight Glass Minimum Marks. View reservoir sight glass. Fluid level must be at or above the minimum mark on glass. If fluid level is below minimum mark, see a Harley-Davidson dealer.
3. Verify front brake hand lever and rear brake foot pedal have a firm feel when applied. If brakes are not firm, the brake system must be bled. See a Harley-Davidson dealer.

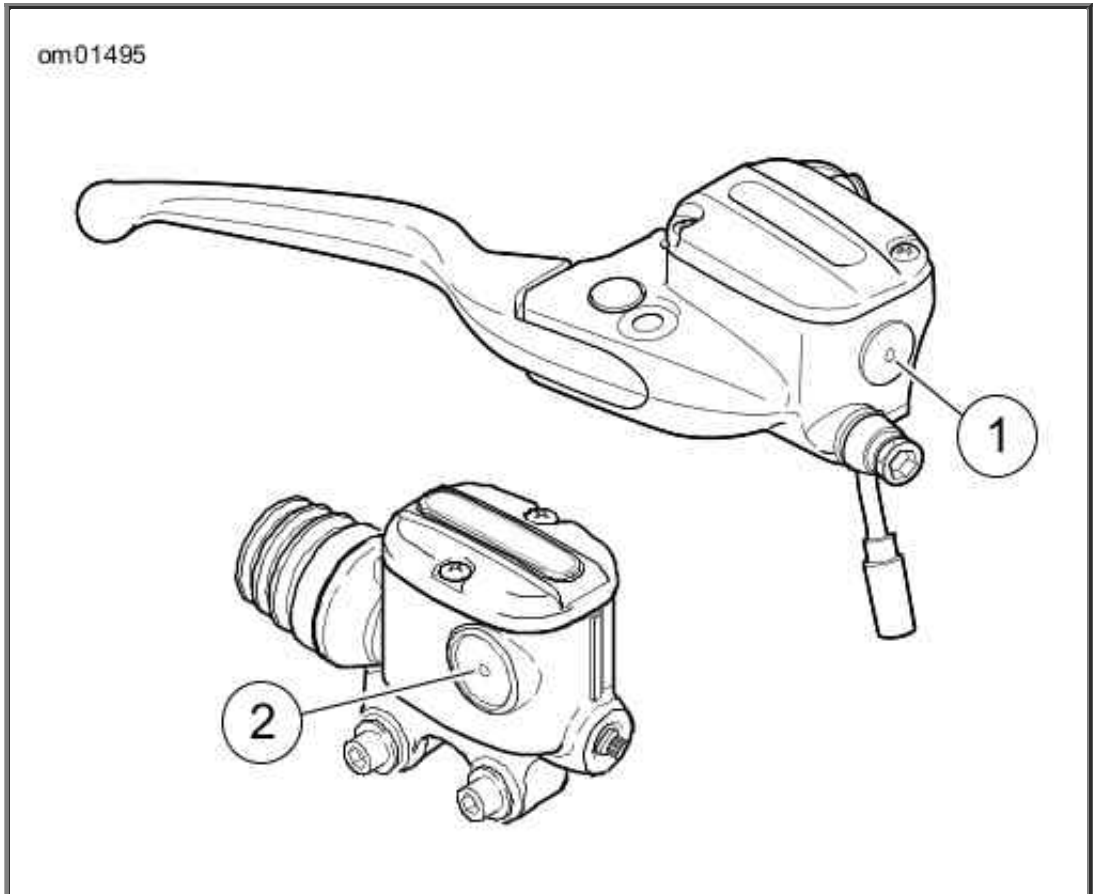

1. Front master cylinder reservoir
2. Rear master cylinder reservoir

Sight Glass Minimum Marks

Brake Pads

WARNING

Inspect brake pads for wear at service maintenance intervals. If you ride under adverse conditions (steep hills, heavy traffic, etc.), inspect more frequently. Excessively worn brake pads can lead to brake failure, which could result in death or serious injury. (00052a)

⚠WARNING

Always replace brake pads in complete sets for correct and safe brake operation. Improper brake operation could result in death or serious injury. (00111a)

⚠WARNING

Brakes are a critical safety component. Contact a Harley-Davidson dealer for brake repair or replacement. Improperly serviced brakes can adversely affect brake performance, which could result in death or serious injury. (00054a)

⚠WARNING

Perform routine scheduled brake maintenance. Lack of maintenance at recommended intervals can adversely affect brake performance, which could result in death or serious injury. (00055a)

⚠WARNING

Be sure wheel and brake caliper are aligned. Riding with a misaligned wheel or brake caliper can cause the brake disc to bind and lead to loss of control, which could result in death or serious injury. (00050a)

Harley-Davidson has provided your new motorcycle with the most optimum brake pad friction material available. It is selected to give the best performance possible under dry, wet and high operating temperature conditions. It exceeds all regulatory requirements currently in effect. However, during some braking conditions you can hear a brake noise. This noise is normal for this friction material.

Minimum Brake Pad Friction Material Thickness

in	mm
0.016	0.4

1. See Brake Pad Friction Material. Check the brake disc as it spins. The disc should run true in the brake caliper.
2. Measure the thickness of the brake pad friction material. The pads do not necessarily wear evenly. Check each pad. The grooves on the brake pads are no longer visible when the pads are near the end of service life.
3. Replace brake pads before friction material reaches mininum thickness. Always replace brake pads in pairs. See a Harley-Davidson dealer. Refer to Minimum Brake Pad Friction Material Thickness.

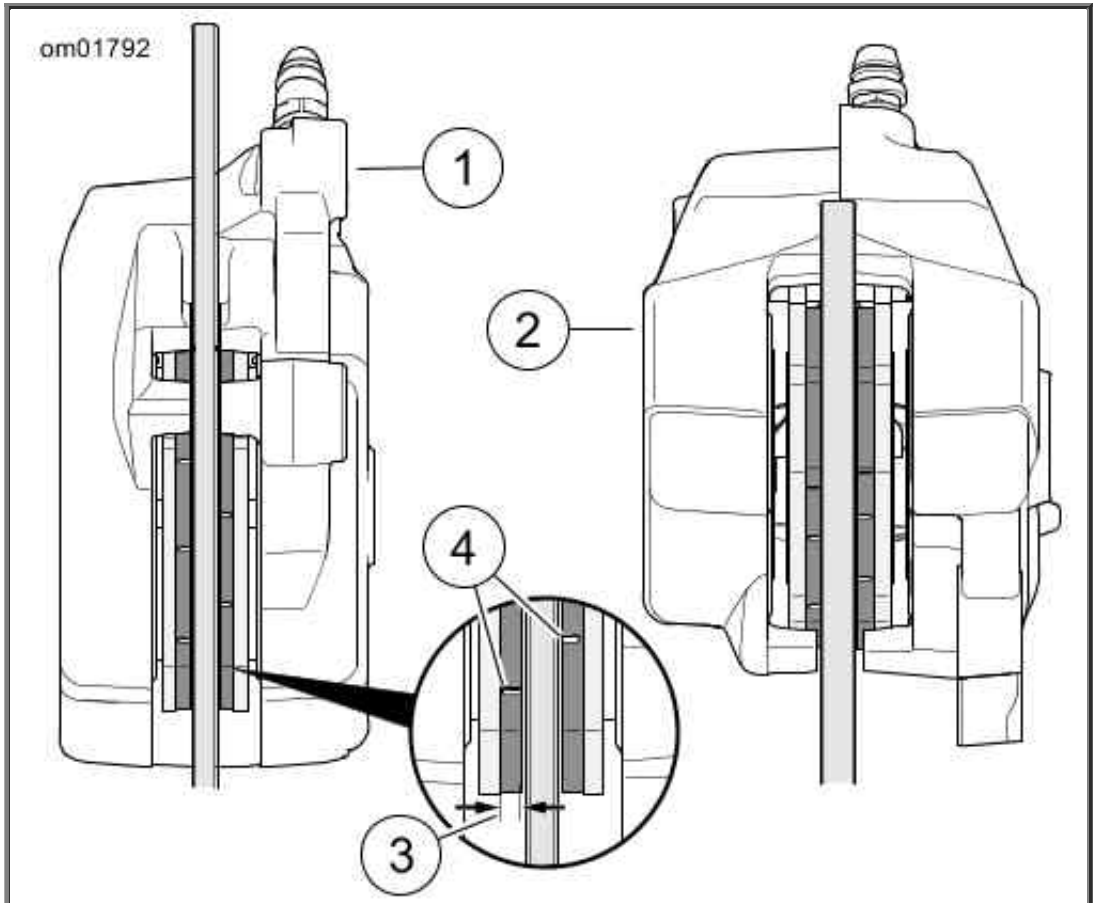

1. Front brake (as viewed from front of vehicle)
2. Rear brake (as viewed from rear of vehicle)
3. Brake pad friction material thickness
4. Brake pad grooves

Brake Pad Friction Material

Tires

Refer to Specified Tires for tires and pressures.

- Keep tires properly inflated.
- Follow tire data for correct cold tire inflation pressure.
- Check tire pressures when tires are cold.

⚠WARNING

Be sure tires are properly inflated, balanced, undamaged, and have adequate tread. Inspect your tires regularly and see a Harley-Davidson dealer for replacements. Riding with excessively worn, unbalanced, improperly inflated, overloaded or damaged tires can lead to tire failure and adversely affect stability and handling, which could result in death or serious injury. (00014b)

⚠WARNING

Match tires, tubes, rim strips or seals, air valves and caps to the correct wheel. Contact a Harley-Davidson dealer. Mismatching can lead to tire damage, allow tire slippage on the wheel or cause tire failure, which could result in death or serious injury. (00023c)

⚠WARNING

Only install original equipment tire valves and valve caps. A valve, or valve and cap combination, that is too long or too heavy can strike adjacent components and damage the valve, causing rapid tire deflation. Rapid tire deflation can cause loss of vehicle control, which could result in death or serious injury. (00281a)

Check tires for correct pressure, excessive wear or any signs of tire damage at least weekly if in daily use. Check before each trip if only used occasionally.

Use only Harley-Davidson specified tires. Other tires may not fit correctly and could adversely affect stability, handling and performance. Refer to Specified Tires.

⚠WARNING

Tires are a critical safety component. Contact a Harley-Davidson dealer for tire repair or replacement. Improper tire service can adversely affect stability and handling, which could result in death or serious injury. (00057a)

⚠WARNING

Replace punctured or damaged tires. In some cases, small punctures in the tread area may be repaired from within the removed tire by a Harley-Davidson dealer. Speed should NOT exceed 50 mph (80 km/h) for the first 24 hours after repair, and the repaired tire should NEVER be used over 80 mph (130 km/h). Failure to follow this warning could lead to tire failure and result in death or serious injury. (00015b)

⚠WARNING

Striking an object, such as a curb or pothole can cause internal tire damage. If an object is struck, have the tire inspected immediately inside and out by a Harley-Davidson dealer. A damaged tire can fail while riding and adversely affect stability and handling, which could

result in death or serious injury. (00058b)

Tire Replacement

Inspection

⚠WARNING

Be sure tires are properly inflated, balanced, undamaged, and have adequate tread. Inspect your tires regularly and see a Harley-Davidson dealer for replacements. Riding with excessively worn, unbalanced, improperly inflated, overloaded or damaged tires can lead to tire failure and adversely affect stability and handling, which could result in death or serious injury. (00014b)

⚠WARNING

Replace tire immediately with a Harley-Davidson specified tire when wear bars become visible or only 1/32 in (0.8 mm) tread depth remains. Riding with a worn tire could result in death or serious injury. (00090c)

Harley-Davidson tires have wear bars that run horizontally across the tread. When a tire is worn to the point the tread wear indicator bars become visible on the tread surfaces, or 1/32 in 0.8 mm tread depth remains, the tire can:

- Be more easily damaged leading to tire failure.
- Provide reduced traction.
- Adversely affect stability and handling.

See Tire Sidewall Wear Bar Locator. Arrows on tire sidewalls pinpoint location of wear bar indicators.

See Wear Bar Appearance. Always replace tires before the tread wear indicator bars appear.

When To Replace Tires

⚠WARNING

Use only Harley-Davidson specified tires. See a Harley-Davidson dealer. Using non-specified tires can adversely affect stability, handling or braking, which could result in death or serious injury. (00024b)

NOTE:

Always replace tires with the specified tires. Refer to Specified Tires.

New tires are needed if:

- Tread wear indicator bars become visible on the tread surfaces.
- Tire cords or fabric become visible through cracked sidewalls, snags or deep cuts.
- Bumps, bulges or slits in the tire.
- Punctures, cuts or other damage to the tire that cannot be repaired.

When installing tires on rims, do not rely on tread design to determine direction of rotation. Always make sure that the rotational arrows molded into the sidewalls point in the direction of rotation when the vehicle is moving forward.

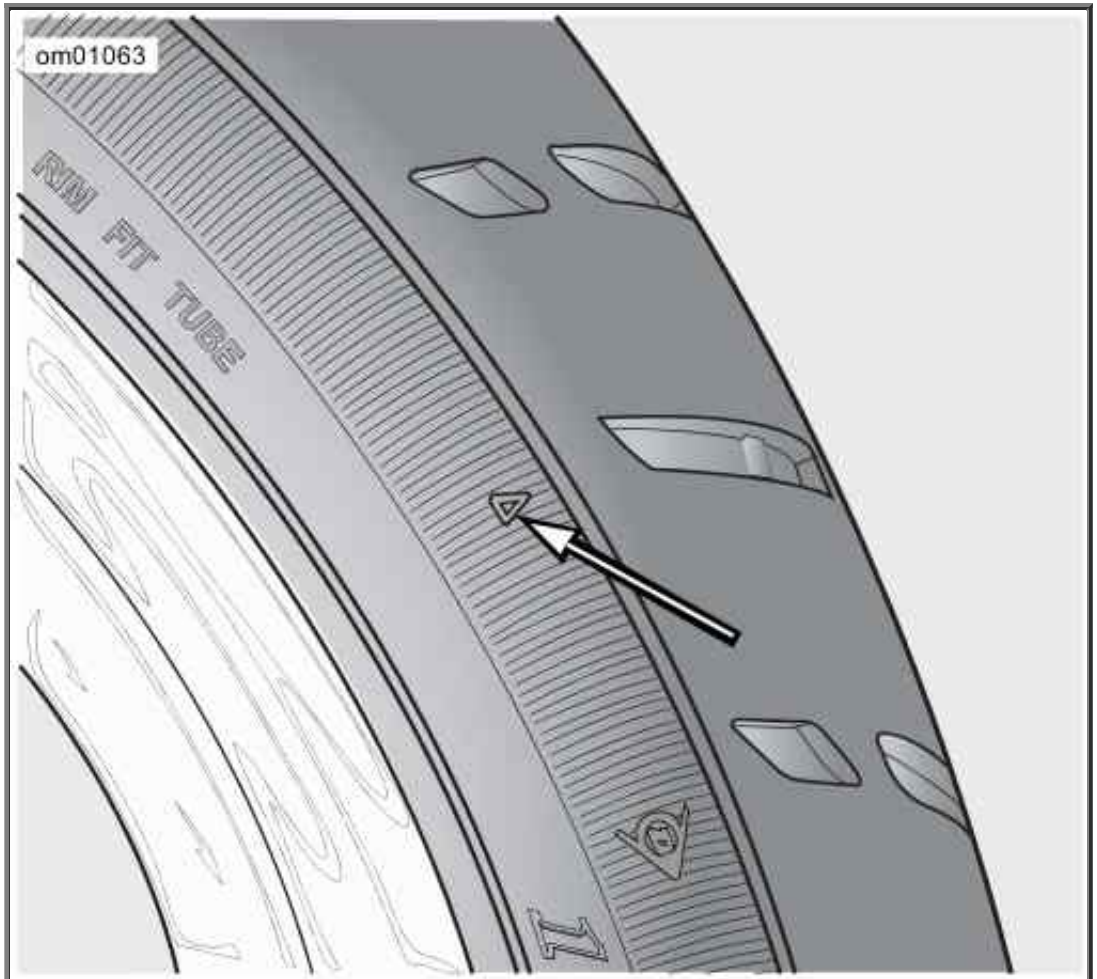

Tire Sidewall Wear Bar Locator

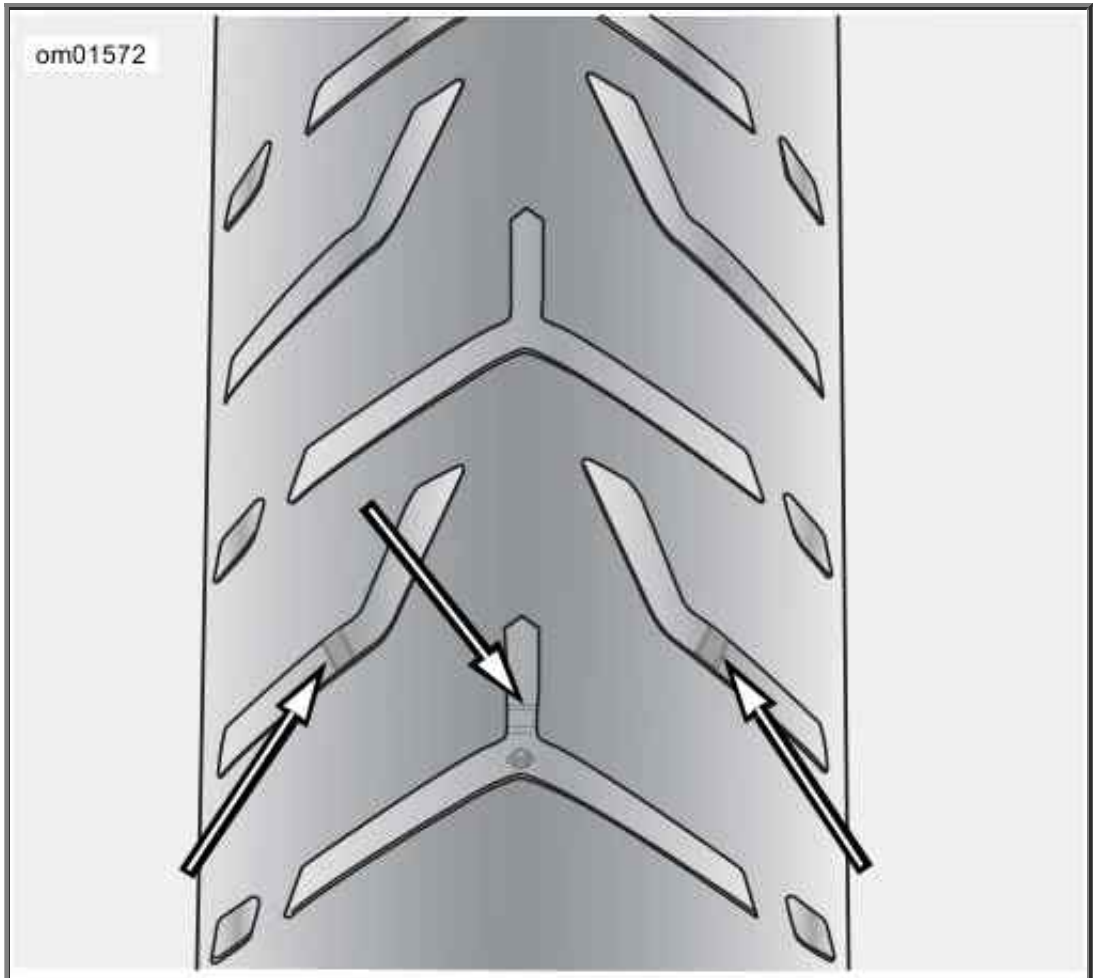

Wear Bar Appearance

Shock Absorbers

Inspect shock absorbers for leaks and rubber bushings for deterioration at proper intervals.

Spark Plugs

⚠WARNING

Disconnecting spark plug cable with engine running can result in electric shock and death or serious injury. (00464b)

⚠CAUTION

Do NOT pull on any electrical wires. Pulling on electrical wires may damage the internal conductor causing high resistance, which may result in minor or moderate injury. (00168a)

Check the spark plugs at proper intervals. Refer to Regular Service Intervals: 2016 Harley-Davidson Touring Models.

1. Disconnect spark plug cables from plugs by pulling up on the molded connector caps.
2. Check spark plug type. Only use those spark plugs specified for your model motorcycle.
3. Check spark plug gap against specifications. Refer to Electrical.

   NOTE:

   *If a torque wrench is not available, tighten **new** spark plugs finger-tight and then tighten an additional one-quarter turn with a spark plug wrench.*
4. Always tighten to the proper torque. Spark plugs must be tightened to the torque specified for proper heat transfer. Refer to Electrical.
5. Connect each molded connector cap until the cap snaps firmly into place over the spark plug.

Air Filter

Removal

NOTE:

When removing insert, only pull on the front edge without pushing in the middle. Otherwise the insert could be damaged.

1. **Models without screw access:** See Air Cleaner Assembly. Pull on front edge of insert (8) to remove.
2. Remove screw (1) and air cleaner cover with rubber seal (3).
3. Remove three screws (5) to release cover bracket (4) from filter element.
4. Remove filter element (6) pulling breather tube from hole on inboard side.
5. Remove breather tube (7) from breather bolts.
6. Inspect the breather tube and fittings for damage.

⚠WARNING

Do not use gasoline or solvents to clean filter element. Flammable cleaning agents can cause an intake system fire, which could result in death or serious injury. (00101a)

⚠WARNING

Compressed air can pierce the skin and flying debris from compressed air could cause serious eye injury. Wear safety glasses when working with compressed air. Never use your hand to check for air leaks or to determine air flow rates. (00061a)

7. Clean filter element.
    a. Wash the paper/wire mesh filter element (and breather tubes) in lukewarm water with a mild detergent. Do not strike filter element on a hard surface to dislodge dirt.
    b. Allow filter element to air dry or use low-pressure compressed air blowing from the inside. Do NOT use air cleaner filter oil on the Harley-Davidson paper/wire mesh air filter element.
    c. Hold the filter element up to a strong light source. The element is sufficiently clean when light is uniformly visible through the media.
    d. Replace the filter element if damaged or if filter media cannot be adequately cleaned.

Installation

NOTE:

Air cleaner mounting without installation of the breather tubes allows crankcase vapors to vent into the atmosphere. This violates emissions regulations.

1. See Air Cleaner Assembly. Install breather tube (7) onto breather bolts.
2. Insert breather tube into hole on inboard side of filter element.
3. Place filter element (6) onto backplate with the flat side at the 4 o'clock position.
4. Install cover bracket. Tighten screws (5) to 108-132 in-lbs (12.2-14.9 Nm).
5. Verify that rubber seal (3) is not damaged and is properly seated around perimeter of air cleaner cover.
6. Place air cleaner cover onto backplate. Apply LOCTITE 243 MEDIUM STRENGTH THREADLOCKER AND SEALANT (blue) to threads of screw (1). Install screw. Tighten to 36-60 in-lbs (4.1-6.8 Nm).
7. **Models without screw access:** Secure insert (8).

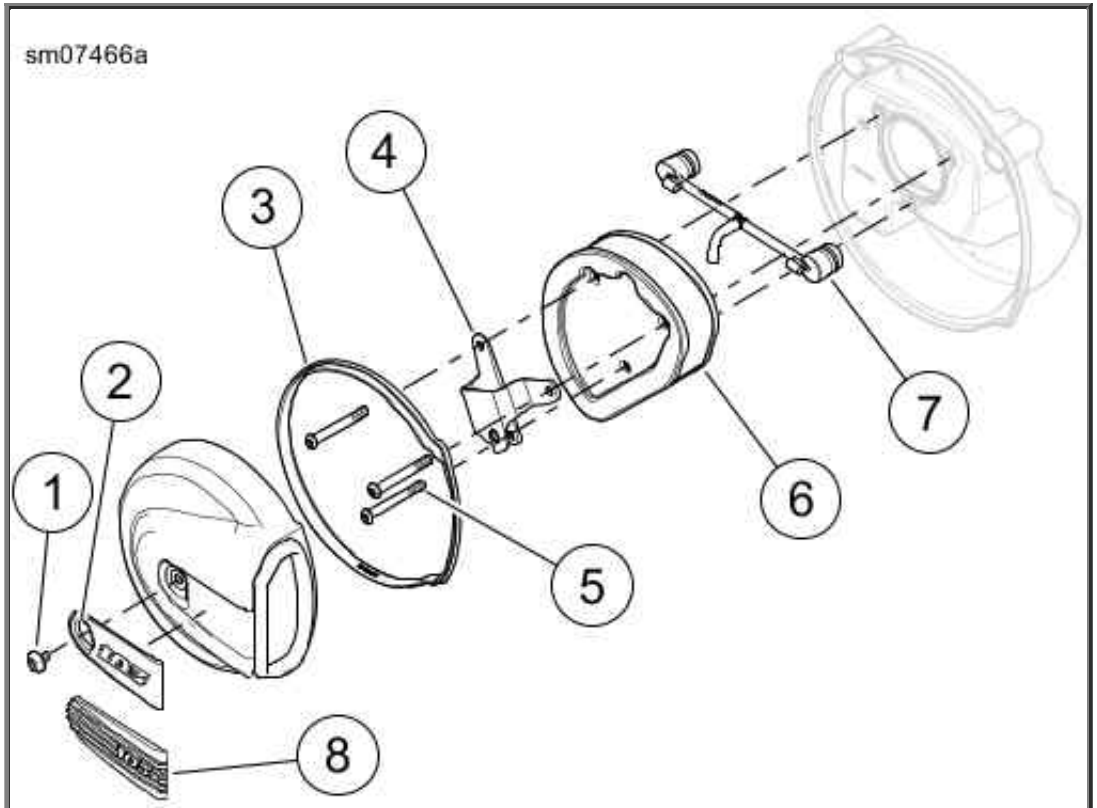

1. Cover screw
2. Insert with screw access
3. Rubber seal
4. Cover bracket
5. Cover bracket screw (3)
6. Filter element
7. Breather tube
8. Insert without screw access

Air Cleaner Assembly

LED Headlamp

FLHTCU, FLHTCU TC, FLHTCUL, FLHTCUL TC, FLHTK, FLHTKL, FLTRU, FLTRX, and FLTRXS models have an LED headlamp. The headlamp contains no replaceable bulbs. The entire assembly must be replaced upon failure. See a Harley-Davidson dealer for service.

Halogen Headlamp

FLHR, FLHRC, FLHX, and FLHXS models have halogen headlamps with replaceable bulbs.

Removal

1. Remove screw at bottom of headlamp door (chrome ring).
2. Rotate door counterclockwise a few degrees. Pull headlamp door straight forward to remove.
3. See Headlamp Retaining Ring. Remove screws (1) securing retaining ring.
4. Remove headlamp. Disconnect headlamp connectors.

Bulb Replacement

⚠WARNING

Handle bulb carefully and wear eye protection. Bulb contains gas under pressure, which, if not handled carefully, could cause serious eye injury. (00062b)

CAUTION

When replacement is required, use only the specified sealed beam unit or bulb, available from a Harley-Davidson dealer. An improper wattage sealed beam or bulb, can cause charging system problems. (00209a)

NOTE:

This headlamp assembly uses separate quartz halogen bulbs for the low beam and the high beam. HDI models also contain a position lamp bulb.

1. Remove headlamp assembly.
2. Disconnect wire harness connectors from the bulbs.
3. Rotate bulb assembly 1/4 turn counterclockwise to remove from the reflector/lens.

CAUTION

Never touch the quartz bulb. Fingerprints will etch the glass and decrease bulb life. Handle the bulb with paper or a clean, dry cloth. Failure to do so could result in bulb damage. (00210b)

4. Insert **new** bulb into reflector/lens and rotate 1/4 turn clockwise.
5. **HDI models:** Rotate position lamp bulb retainer 1/4 turn counterclockwise to remove. Replace bulb and install bulb retainer in lamp housing.
6. Connect the wiring harness connectors to the bulbs.
7. Secure the headlamp assembly and headlamp door.

Installation

1. Install headlamp connectors.
2. See Headlamp Retaining Ring. Secure headlamp assembly with retaining ring and screws (1). Tighten to 23-26 in-lbs (2.6-2.9 Nm).
3. Install the headlamp door (chrome ring):
    a. Verify that rubber seal is in place on headlamp door. Apply glass cleaner to seal to ease installation.
    b. With the headlamp door rotated a few degrees counterclockwise, push headlamp door straight onto headlamp.
    c. Rotate clockwise until screw can be installed. Tighten to 9-18 in-lbs (1.0-2.0 Nm).

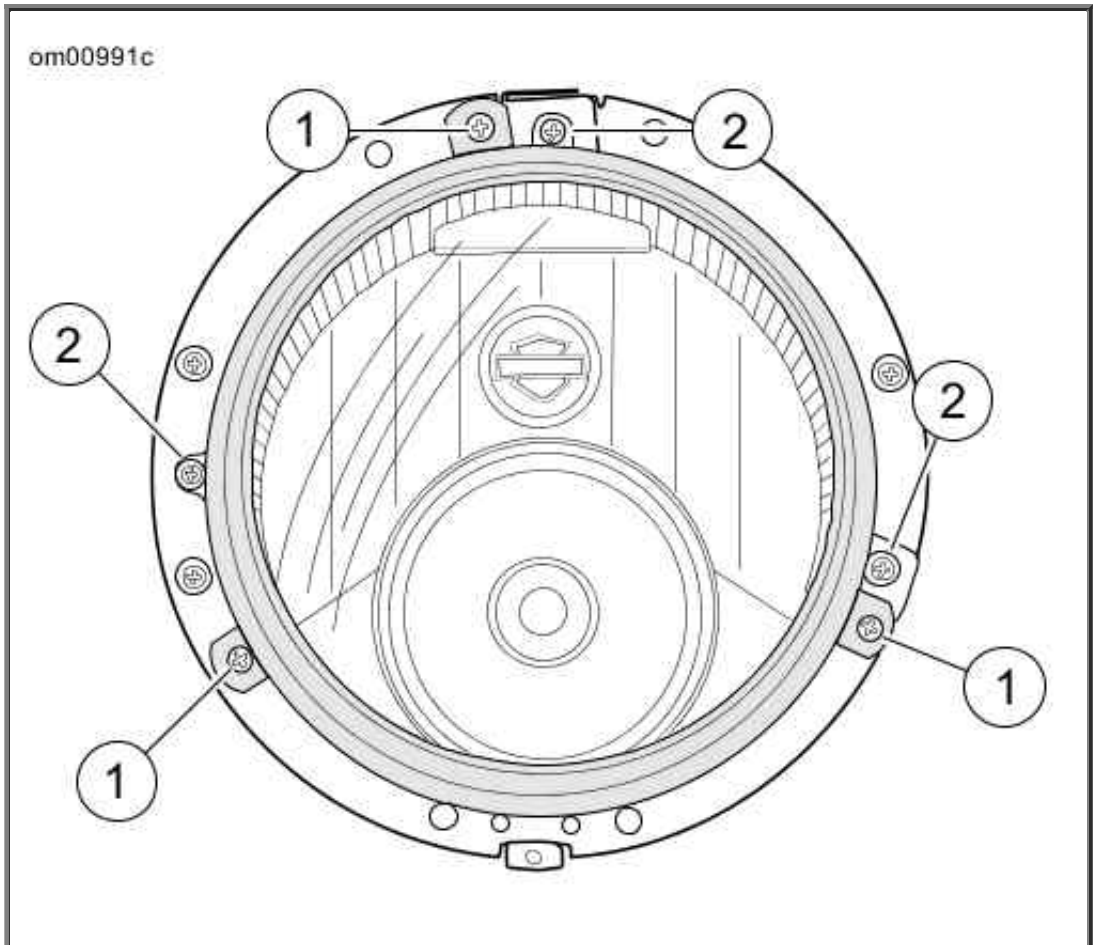

1. Retaining ring screw (3)
2. Headlamp adjusting screw (3)

Headlamp Retaining Ring

Checking Headlamp Alignment

1. Check tire pressure.
2. Adjust rear shocks for the rider and intended load.
3. Fill fuel tank or add an equal amount of ballast.

   NOTE:

   Choose a wall in minimum light.

4. See Headlamp Alignment: Quartz Halogen Type. Park the motorcycle on a line (1) perpendicular to the wall.
5. Position motorcycle with the front axle 25 ft 7.6 m from wall.
6. Draw a vertical centerline (2) on the wall aligned with line (1).

   NOTE:

   The upper lens is low beam on LED headlamps.

7. With the motorcycle loaded, point the front wheel straight forward at wall. Measure the distance (4) from the floor to the bulb centerline:
   a. **Quartz halogen:** Center of **high** beam bulb.
   b. **LED, fork-mounted fairing:** Center of **low** beam bulb.
   c. **LED, frame-mounted fairing:** Center of headlamp face.
8. Draw a horizontal line (5) through the vertical line:
   a. **Quartz halogen:** See Headlamp Alignment: Quartz Halogen Type. 2.1 in 53.3 mm lower than the measured distance.
   b. **LED, fork-mounted fairing:** See Headlamp Alignment: LED Type (typical). At the measured distance.
   c. **LED, frame-mounted fairing:** See Headlamp Alignment: Quartz Halogen Type. 2.1 in 53.3 mm lower than the measured distance.
9. The headlamp is aligned when the light beam hot spot is located as shown.
   a. **Quartz halogen:** See Headlamp Alignment: Quartz Halogen Type. Hot spot centered on mark with headlamp set to **high beam**.
   b. **LED, fork-mounted fairing:** See Headlamp Alignment: LED Type (typical). Top of hot spot at mark with headlamp set to **low beam**.
   c. **LED, frame-mounted fairing:** See Headlamp Pattern: Frame-Mounted Fairing Models. Center of hot spot at mark with headlamp set to **high beam**.

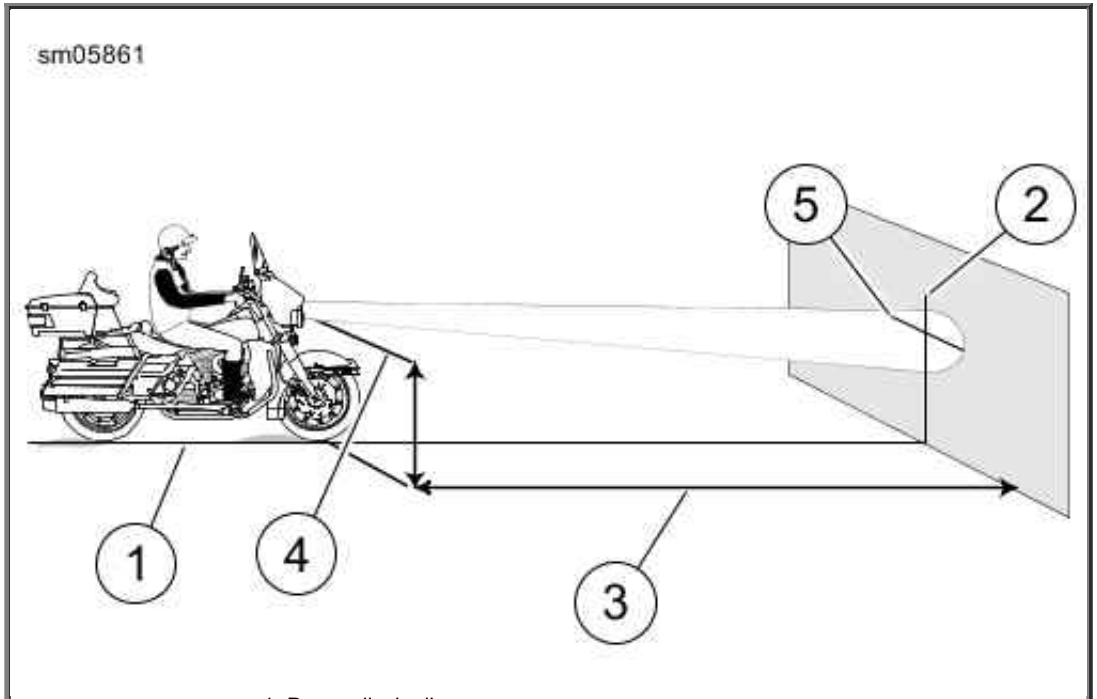

1. Perpendicular line
2. Vertical line
3. 25 ft (7.6 m)
4. High beam bulb centerline
5. Horizontal line 2.1 in (53.3 mm) lower than high beam centerline

Headlamp Alignment: Quartz Halogen Type

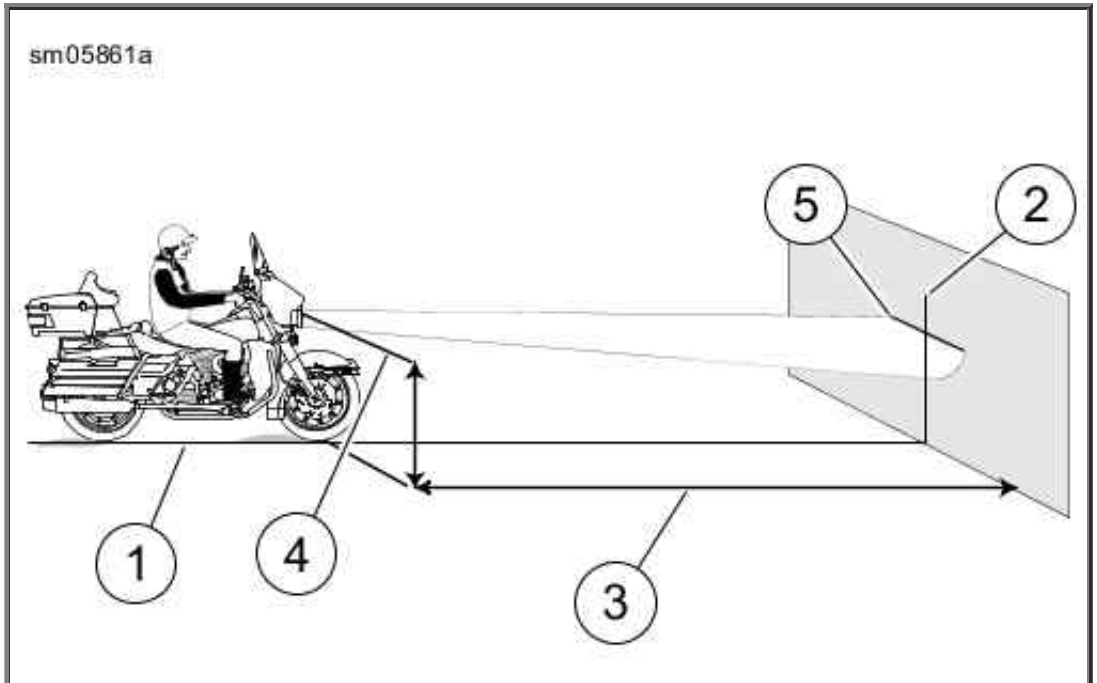

1. Perpendicular line
2. Vertical line
3. 25 ft (7.6 m)
4. Low beam bulb centerline
5. Horizontal line

Headlamp Alignment: LED Type (typical)

Adjust Headlamp

NOTE:

Do not remove trim ring for headlamp adjustment.

1. Set headlamp beam:
    a. **Quartz halogen:** Set headlamp to **high beam**.
    b. **LED, fork-mounted fairing:** Set headlamp to **low beam**.
    c. **LED, frame-mounted fairing:** Set headlamp to **high beam**.
2. **All except frame-mounted fairing:** See Headlamp Adjusters: All except Frame-Mounted Fairing (typical). Insert a 5/32 in ball end hex wrench through adjuster slots in trim ring.
    a. **Horizontal:** Turn the horizontal adjusting screw (1) to adjust light beam left and right.
    b. **Vertical:** Turn the vertical adjusting screw (2) to adjust light beam up and down.

c. See Headlamp Pattern: Quartz Halogen Type or Headlamp Pattern: LED Type with Auxiliary/Fog Lamps. Adjust headlamp light beam.

NOTES:

- *Frame-mounted fairing models allow only vertical adjustment.*
- *Any of three tools can be used: 9 mm socket, 6 mm hex or T15 Torx.*

3. **Frame-mounted fairing models:** See Headlamp Adjuster: FLTRU, FLTRX, FLTRXS.

   a. Turn the adjuster to adjust light beam up and down.

   b. See Headlamp Pattern: Frame-Mounted Fairing Models. Adjust headlamp light beam.

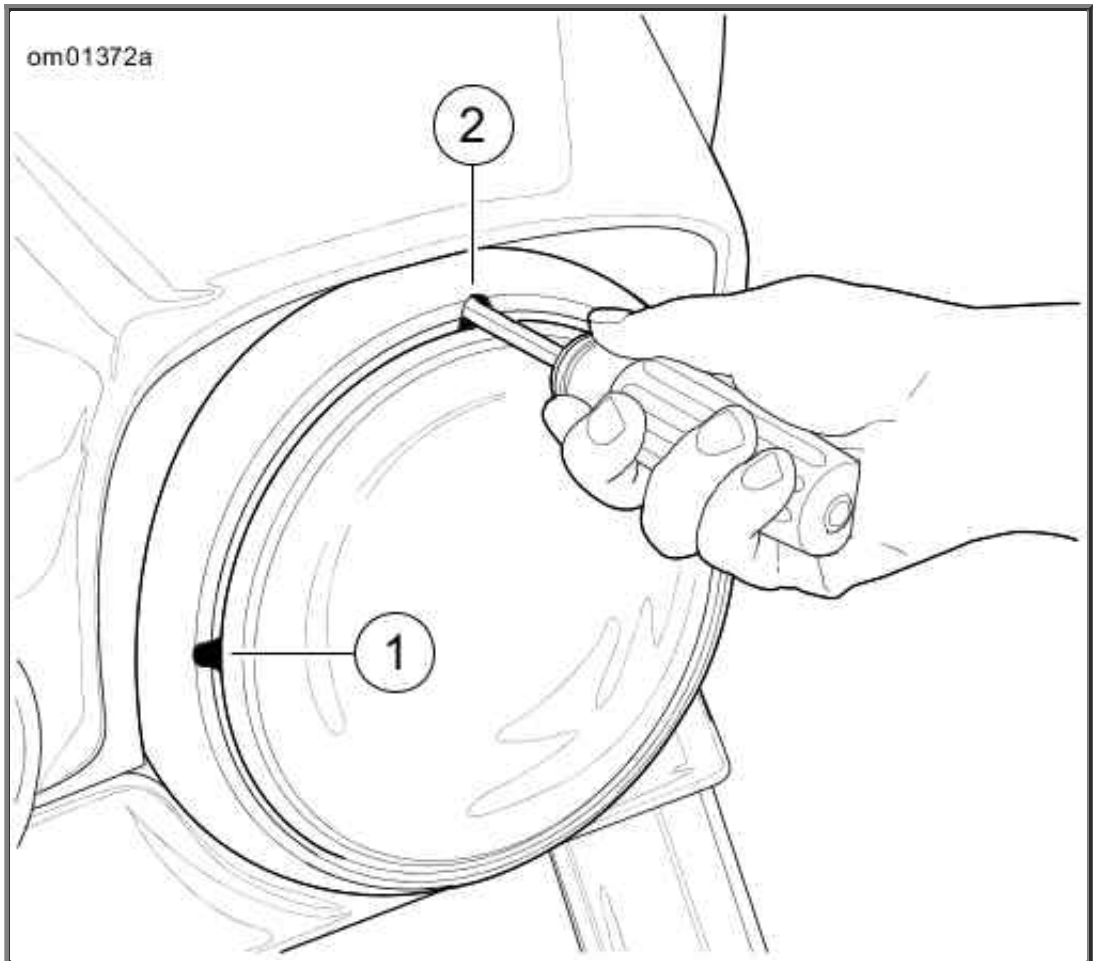

1. Horizontal adjuster
2. Vertical adjuster

Headlamp Adjusters: All except Frame-Mounted Fairing (typical)

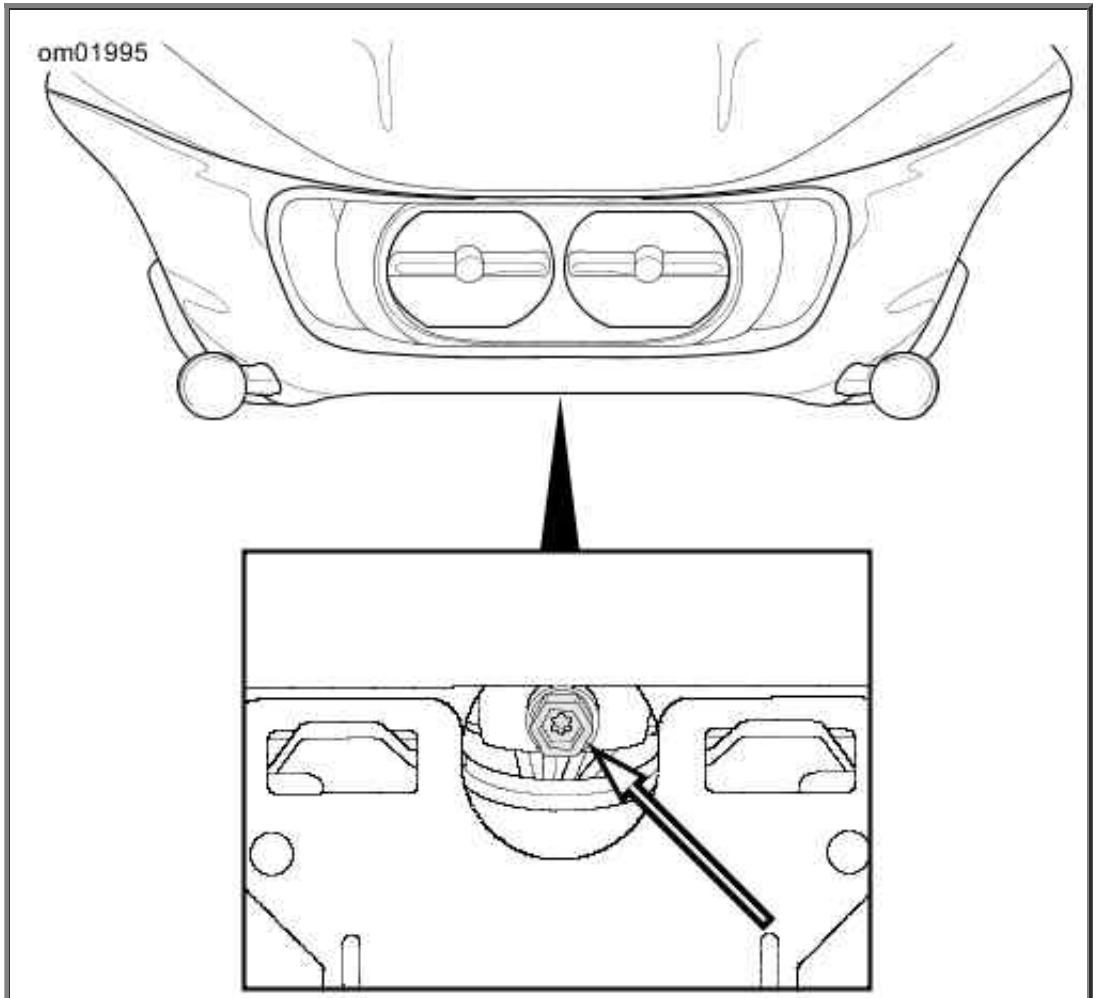

Headlamp Adjuster: FLTRU, FLTRX, FLTRXS

Adjust Auxiliary/Fog Lamps

1. Place the vehicle facing a target wall as described in Checking Headlamp Alignment.

   NOTE:

   Have a person weighing roughly the same as the principal rider sit on the motorcycle.

2. With the vehicle upright and a rider seated on the motorcycle, measure the distance from the floor to the centerline of each auxiliary/fog lamp.
3. Measure the horizontal distance from the headlamp vertical centerline to the vertical centerline of each auxiliary/fog lamp.
4. See Headlamp Pattern: Quartz Halogen Type or Headlamp Pattern: LED Type with Auxiliary/Fog Lamps. Mark the auxiliary/fog lamp

horizontal and vertical centerlines (2, 3) on the wall.

5. Remove the turn signal lamp from the mounting bracket.
6. Using Flare Nut Socket FRX181 , loosen the auxiliary/fog lamp flange nut only enough to allow movement of the lamp.
7. Turn on the headlamp low beam and cover both the headlamp and the right auxiliary/fog lamp.
    a. **Quartz halogen:** Adjust the left auxiliary/fog lamp so the entire high intensity zone (4) is below and to the right of the left auxiliary/fog lamp centerlines as shown in Headlamp Pattern: Quartz Halogen Type.
    b. **LED:** Adjust the left auxiliary/fog lamp so the entire high intensity zone (4) is below the centerline as shown in Headlamp Pattern: LED Type with Auxiliary/Fog Lamps.
8. Repeat procedure with right lamp.
9. Tighten auxiliary/fog lamp nut:
    a. **Models with flat lens turn signal lamps:** 15-18 ft-lbs (20.3-24.4 Nm).
    b. **Models with bullet style turn signal lamps:** 20-24 ft-lbs (27.1-32.5 Nm).
10. Install turn signal:
    a. **Models with flat lens turn signal lamps:** Start two screws to secure turn signal lamp to mounting bracket. Verify that conduit fits in slot at back of bracket and is not pinched. Tighten to 36-60 in-lbs (4.1-6.8 Nm).
    b. **Models with bullet style turn signal lamps:** Secure turn signal lamp to mounting bracket. Tighten to 96-120 in-lbs (10.9-13.5 Nm).

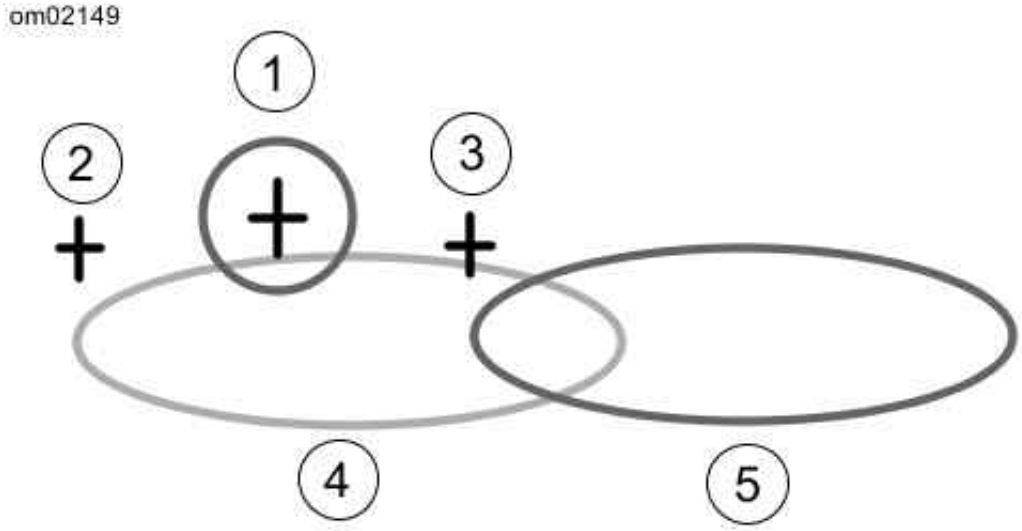

1. High beam area
2. Left auxiliary/fog lamp centerlines
3. Right auxiliary/fog lamp centerlines
4. Left auxiliary/fog high intensity zone
5. Right auxiliary/fog high intensity zone

Headlamp Pattern: Quartz Halogen Type

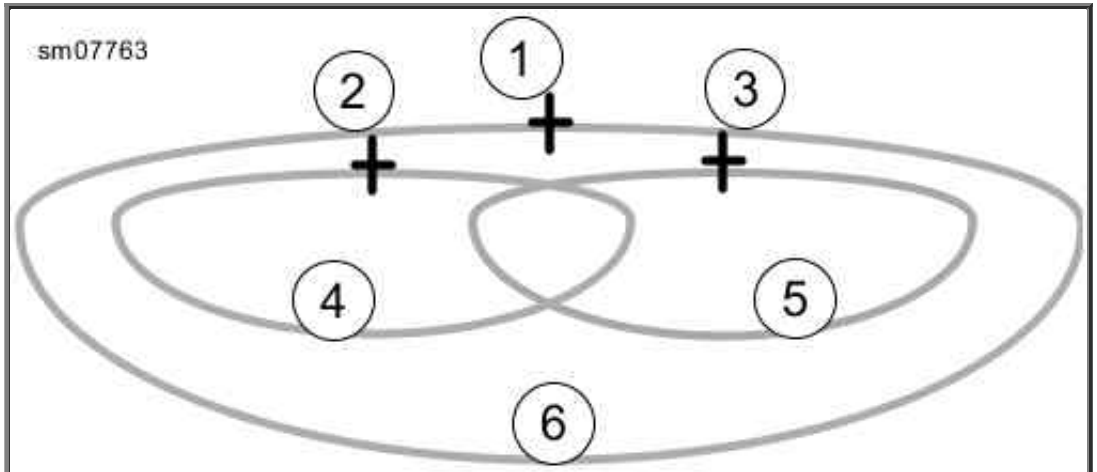

1. Headlamp centerline
2. Left auxiliary/fog lamp centerline
3. Right auxiliary/fog lamp centerline
4. Left auxiliary/fog lamp beam area
5. Right auxiliary/fog lamp beam area
6. Headlamp low beam area

Headlamp Pattern: LED Type with Auxiliary/Fog Lamps

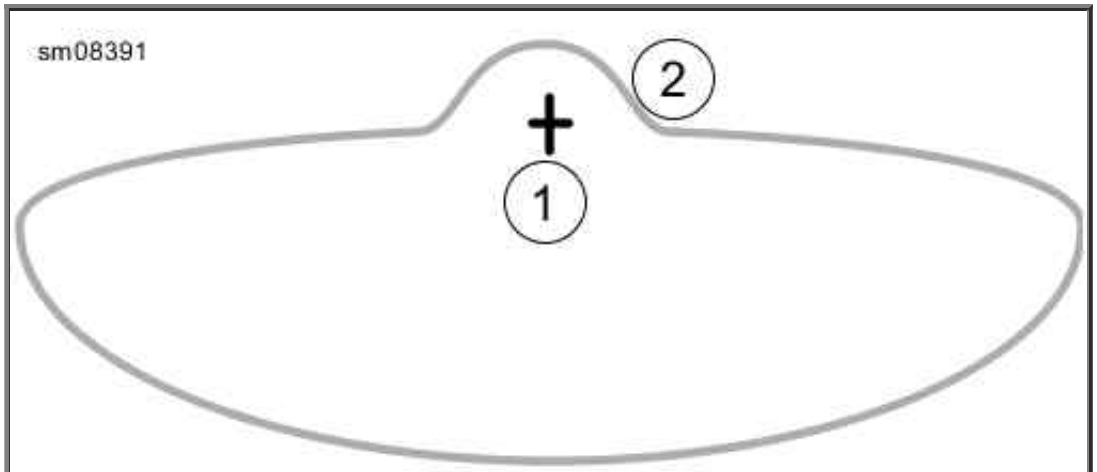

1. Headlamp centerline minus 2.1 in (53.3 mm)
2. Headlamp high beam area

Headlamp Pattern: Frame-Mounted Fairing Models

Turn Signal Bulb Replacement: Bullet Style

NOTE:

Models with LED lamps do not contain replacement bulbs. Replace the LED assembly.

1. See Lens Cap Notch. Insert a coin or the blade of a small screwdriver into the notch at the bottom of the lens cap. Carefully twist until the lens cap pops out of the lamp housing.
2. Push bulb in and rotate counterclockwise. Pull bulb from socket.
3. Inspect condition of electrical contacts in socket. If necessary, clean with a small wire brush and electrical contact cleaner.
4. Apply ELECTRICAL CONTACT LUBRICANT to contacts in socket and at bottom of **new** bulb.
5. Align pins on **new** bulb with pin guides in bulb socket. Push bulb in and turn clockwise to lock in place.
6. Snap lens cap onto the lamp housing with notch at bottom.

⚠WARNING

Be sure that all lights and switches operate properly before operating motorcycle. Low visibility of rider can result in death or serious injury. (00316a)

7. Test lamp operation.

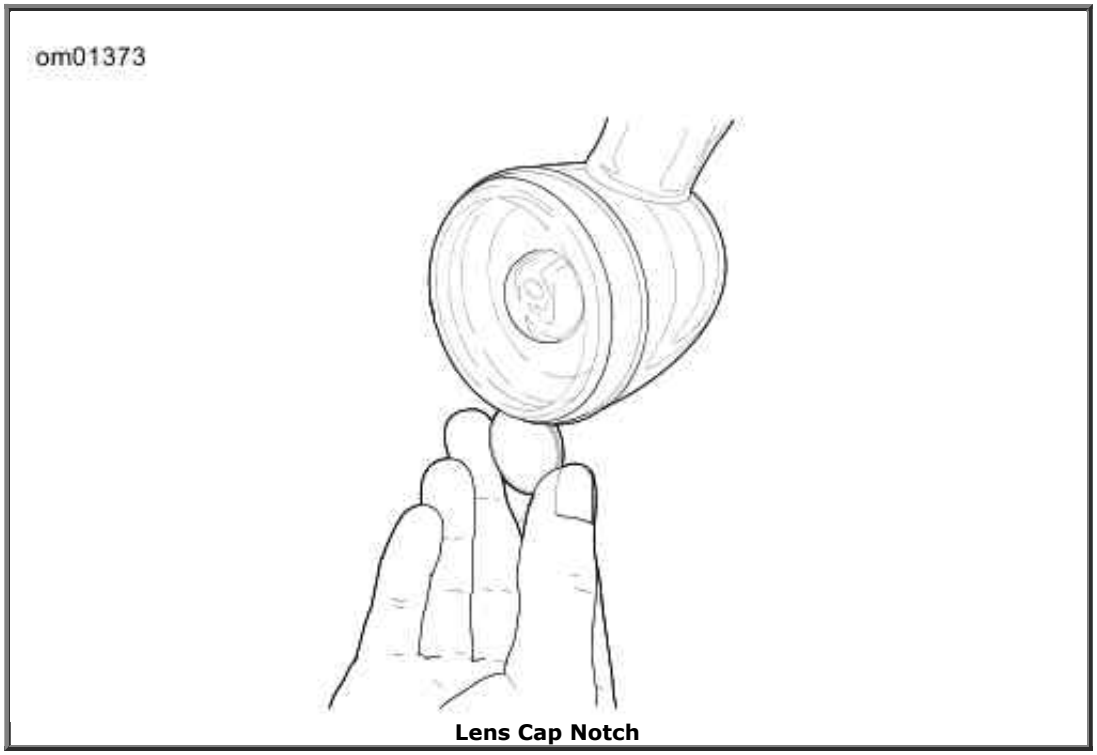

Lens Cap Notch

Turn Signal Bulb Replacement: Flat Lens Style

1. See Turn Signal Lamp Assembly: Flat Lens Style. Remove two screws (1) to release lens (2) from lamp housing (4).
2. While pushing bulb (3) in, rotate counterclockwise to remove.
3. Inspect condition of electrical contacts in socket. If necessary, clean with a small wire brush and electrical contact cleaner.
4. Apply ELECTRICAL CONTACT LUBRICANT to contacts in socket and at bottom of **new** bulb.
5. Align pins on **new** bulb with guides in bulb socket. Push and rotate new bulb clockwise into socket.
6. Secure lens (2) to lamp housing (4) with two screws (1).

⚠WARNING

Be sure that all lights and switches operate properly before operating motorcycle. Low visibility of rider can result in death or serious injury. (00316a)

7. Check operation of all lamps.

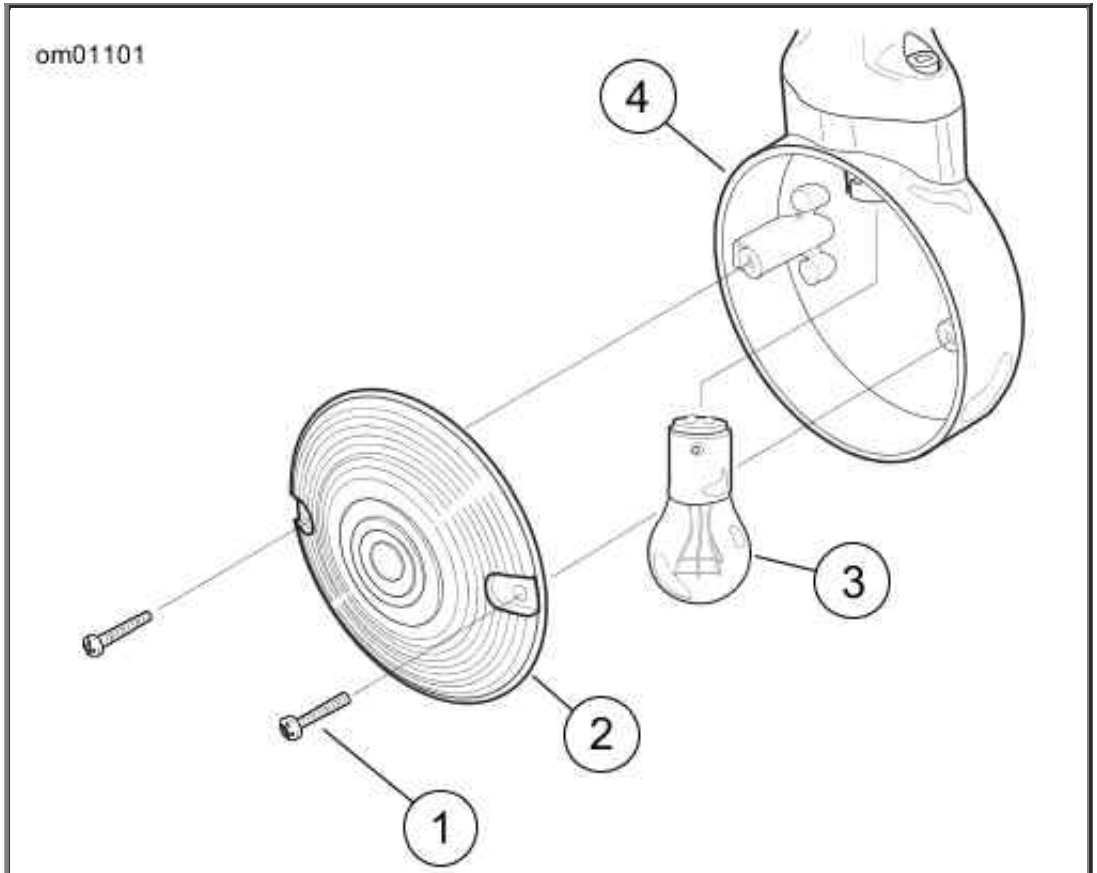

1. Screws (2)
2. Lens
3. Bulb
4. Lamp housing

Turn Signal Lamp Assembly: Flat Lens Style

Replace Tail Lamp Bulb

Removal

1. Remove two screws to release tail lamp assembly from chrome base.
2. See Tail Lamp Assembly. Disconnect tail lamp connector (3).
3. Rotate bulb socket (4) a quarter turn counterclockwise and remove from tail lamp assembly. Remove bulb.

Installation

1. Coat base of **new** bulb with ELECTRICAL CONTACT LUBRICANT. Install **new** bulb.
2. See Tail Lamp Assembly. Insert socket (4) into tail lamp assembly. Rotate a quarter turn clockwise.
3. Attach tail lamp connector (3).
4. Place tail lamp into position against chrome base.

   NOTE:

   Do not over-tighten screws.
5. Install two screws. Tighten to 20-24 in-lbs (2.3-2.7 Nm).

⚠WARNING

Be sure that all lights and switches operate properly before operating motorcycle. Low visibility of rider can result in death or serious injury. (00316a)

6. Check operation of all lamps.

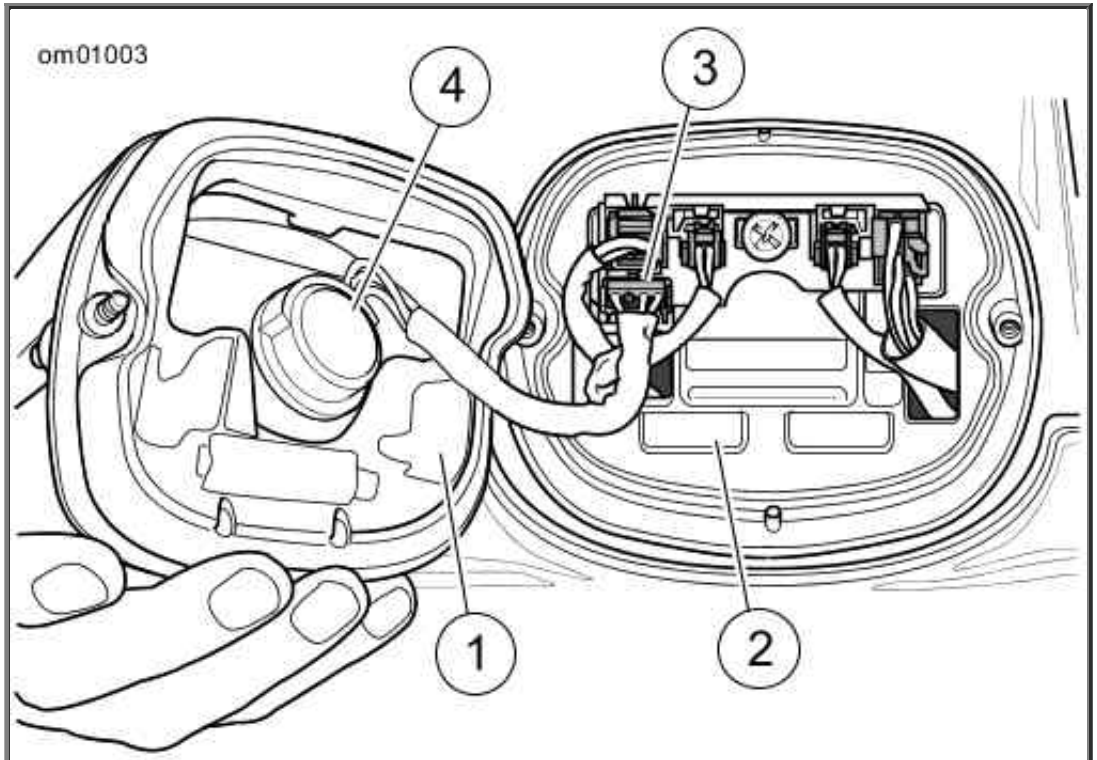

1. Lens
2. Base
3. Tail lamp connector
4. Bulb socket

Tail Lamp Assembly

Battery Maintenance

Type

Your motorcycle uses an Absorbed Glass Mat (AGM) battery. The AGM battery is permanently sealed, valve regulated, maintenance-free, lead/calcium and sulfuric acid battery. All batteries are shipped precharged and ready for service. Do not attempt to open the battery for any reason.

Antidotes for Battery Acid

CONTACT	TREATMENT
External	Flush with water.
Internal	Drink large quantities of milk or water, followed by milk of magnesia, vegetable oil or beaten eggs. Get immediate medical attention.
Eyes	Flush with water. Get immediate medical attention.

Eyes	Flush with water. Get immediate medical attention.

⚠WARNING

Batteries contain sulfuric acid, which could cause severe burns to eyes and skin. Wear a protective face shield, rubberized gloves and protective clothing when working with batteries. KEEP BATTERIES AWAY FROM CHILDREN. (00063a)

⚠WARNING

Explosive hydrogen gas, which escapes during charging, could cause death or serious injury. Charge battery in a well-ventilated area. Keep open flames, electrical sparks and smoking materials away from battery at all times. KEEP BATTERIES AWAY FROM CHILDREN. (00065a)

⚠WARNING

Batteries, battery posts, terminals and related accessories contain lead and lead compounds, and other chemicals known to the State of California to cause cancer, and birth defects or other reproductive harm. Wash hands after handling. (00019e)

⚠WARNING

Never remove warning label attached to top of battery. Failure to read and understand all precautions contained in warning, could result in death or serious injury. (00064a)

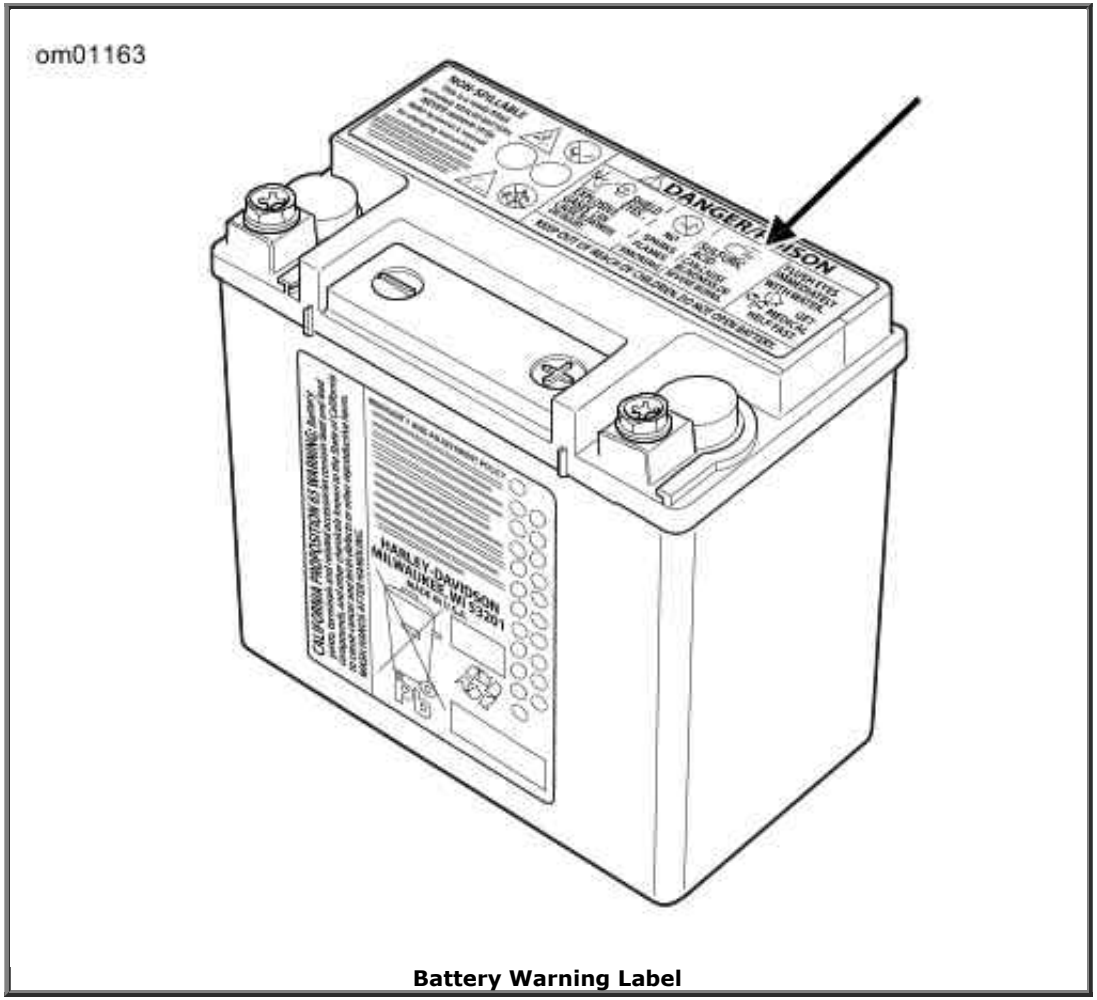

Battery Warning Label

1. Contents are corrosive
2. Wear safety glasses
3. Contents are explosive
4. Keep flames away
5. Read instructions
6. Keep away from children

Battery Warning Label

Voltmeter Test

The voltmeter test provides a general indicator of battery condition. Check the voltage of the battery to verify that it is in a 100 percent fully charged condition. If the open circuit (disconnected) voltage reading is below 12.7 V, charge the battery. Recheck the voltage after the battery has set for one to two hours. Refer to Voltmeter Test.

Voltmeter Test

READING IN VOLTS	PERCENT OF CHARGE
12.7	100
12.6	75
12.3	50
12.0	25
11.8	0

Cleaning and Inspection

Battery top must be clean and dry. Dirt and electrolyte on top of the battery can cause battery to self-discharge.

1. Clean battery top.
2. Clean cable connectors and battery terminals using a wire brush or fine grit sandpaper to remove any oxidation.
3. Inspect and clean the battery screws, clamps and cables. Check for breakage, loose connections and corrosion.
4. Check the battery posts for melting or damage caused by over-tightening.
5. Inspect the battery for discoloration, a raised top or a warped or distorted case. These conditions might indicate that the battery has been frozen, overheated or overcharged.
6. Inspect the battery case for cracks or leaks.

Charging

An automatic, constant monitoring battery charger/tender with a charging rate of 5 amps or less at less than 14.6 volts is recommended. The use of constant current chargers (including trickle chargers) to charge sealed AGM batteries is not recommended. Any overcharge will cause dry-out and premature battery failure. Never charge a battery without first reviewing the instructions for the charger being used. In addition to the manufacturer's instructions, follow these general safety precautions.

Charge the battery if any of the following conditions exist:

- Vehicle lamps appear dim.
- Electric starter sounds weak.
- Battery has not been used for an extended time.

⚠WARNING

Explosive hydrogen gas, which escapes during charging, could cause death or serious injury. Charge battery in a well-ventilated area. Keep open flames, electrical sparks and smoking materials away from battery at all times. KEEP BATTERIES AWAY FROM CHILDREN. (00065a)

⚠WARNING

Batteries contain sulfuric acid, which could cause severe burns to eyes and skin. Wear a protective face shield, rubberized gloves and protective clothing when working with batteries. KEEP BATTERIES AWAY FROM CHILDREN. (00063a)

1. Perform a voltmeter test to determine the state of charge. If battery needs to be charged, proceed to the next step.
2. Place the battery on a level surface.

⚠WARNING

Unplug or turn OFF battery charger before connecting charger cables to battery. Connecting cables with charger ON can cause a spark and battery explosion, which could result in death

or serious injury. (00066a)

⚠WARNING

Connect positive (+) battery cable first. If positive (+) cable should contact ground with negative (-) cable connected, the resulting sparks can cause a battery explosion, which could result in death or serious injury. (00068a)

⚠WARNING

Disconnect negative (-) battery cable first. If positive (+) cable should contact ground with negative (-) cable connected, the resulting sparks can cause a battery explosion, which could result in death or serious injury. (00049a)

CAUTION

Do not reverse the charger connections described in the following steps or the charging system of the motorcycle could be damaged. (00214a)

NOTES:

- *Do not use chargers with excessively high voltage designed for flooded batteries or excessively high current designed for much larger batteries. Do not charge at more than 5 amps or more than 14.6 volts.*
- *Most automatic, constant monitoring battery chargers are completely automatic and can be left connected to both AC power and to the battery that is being charged. When leaving this type of charger connected for extended periods of time, periodically check the battery to see if it is unusually warm. This is an indication that the battery may have a weak cell or internal short. Read the manufacturer's instructions for the charger being used.*

3. Connect the red battery charger lead to positive terminal of the battery.
4. Connect the black battery charger lead to negative terminal of the battery.

   NOTE:

   If the battery is still in the vehicle, connect the negative lead to the chassis ground. Make sure that the ignition and all electrical accessories are turned off.

5. Step away from the battery and turn on the charger.

⚠WARNING

Unplug or turn OFF battery charger before disconnecting charger cables from battery. Disconnecting clamps with charger ON can cause a spark and battery explosion, which could result in death or serious injury. (00067a)

6. After the battery is fully charged, turn OFF the charger. Disconnect the black battery charger lead from the negative terminal of the battery.
7. Disconnect the red battery charger lead from the positive terminal of the battery.

8. Mark the charging date on the battery.

Storage

If the motorcycle will not be operated for several weeks, such as during the winter season, remove the battery from the motorcycle and fully charge.

If the motorcycle will be stored with the battery installed, connect an automatic, constant monitoring charger/tender to maintain charge. See an authorized Harley-Davidson dealer for more information.

A battery that is removed from the vehicle is affected by self-discharge. A battery that is stored in the vehicle is affected by both self-discharge and, more significantly, parasitic loads.

- Batteries self-discharge at a faster rate at higher ambient temperatures.
- To reduce the self-discharge rate, store battery in a cool, dry place.
- Charge the battery every two weeks if stored in the vehicle.
- Charge the battery once per month if stored out of the vehicle.

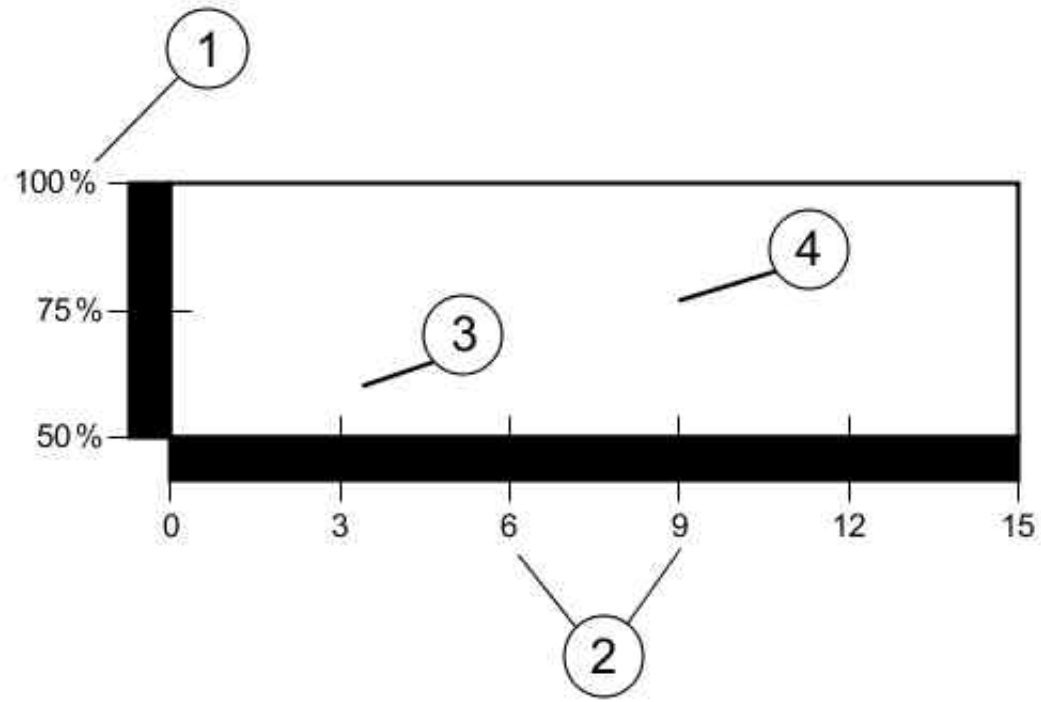

1. Capacity
2. Months of non-use
3. Measured at 105 °F (40 °C)
4. Measured at 77 °F (25 °C)

Effective Rate of Temperature on Battery Self-discharging Rate

Battery Tender Connector

See Battery Tender Connector (under left side cover). The motorcycle has a quick disconnect battery tender connector under the left side cover below the main fuse. Connecting a battery tender between rides and during storage can maintain battery charge and extend the life of the battery.

To access connector, remove left side cover. See Side Covers.

Route the connector through the slot in the bottom of the electrical caddy. Secure the harness and connector with cable straps in a location that prevents damage to the connector and surrounding areas. Make sure to apply ELECTRICAL CONTACT LUBRICANT to the terminals. Keep the connector capped to prevent moisture damage when not in use.

See Battery Tender Connection. Connect an automatic, constant monitoring battery charger/tender as shown. The connector is compatible with all Harley-Davidson battery tenders.

For more charging information, see Battery Maintenance.

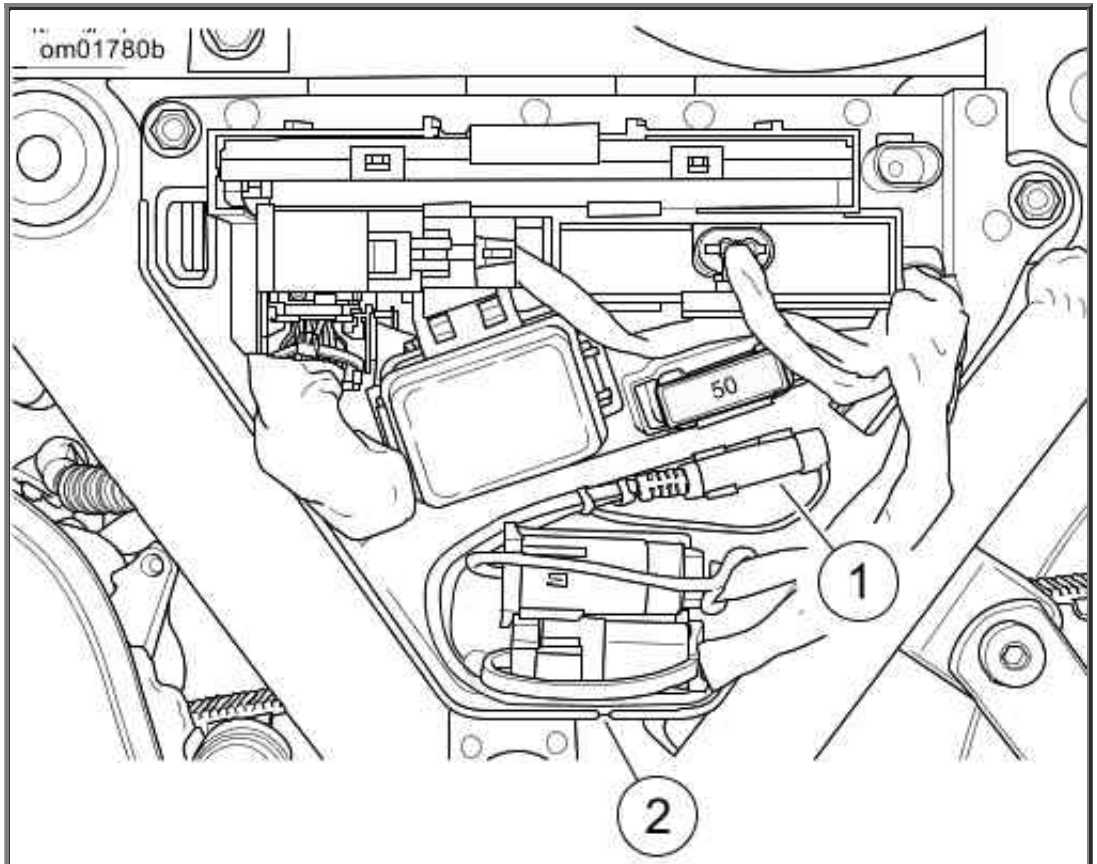

1. Battery tender connector
2. Route connector through slot

Battery Tender Connector (under left side cover)

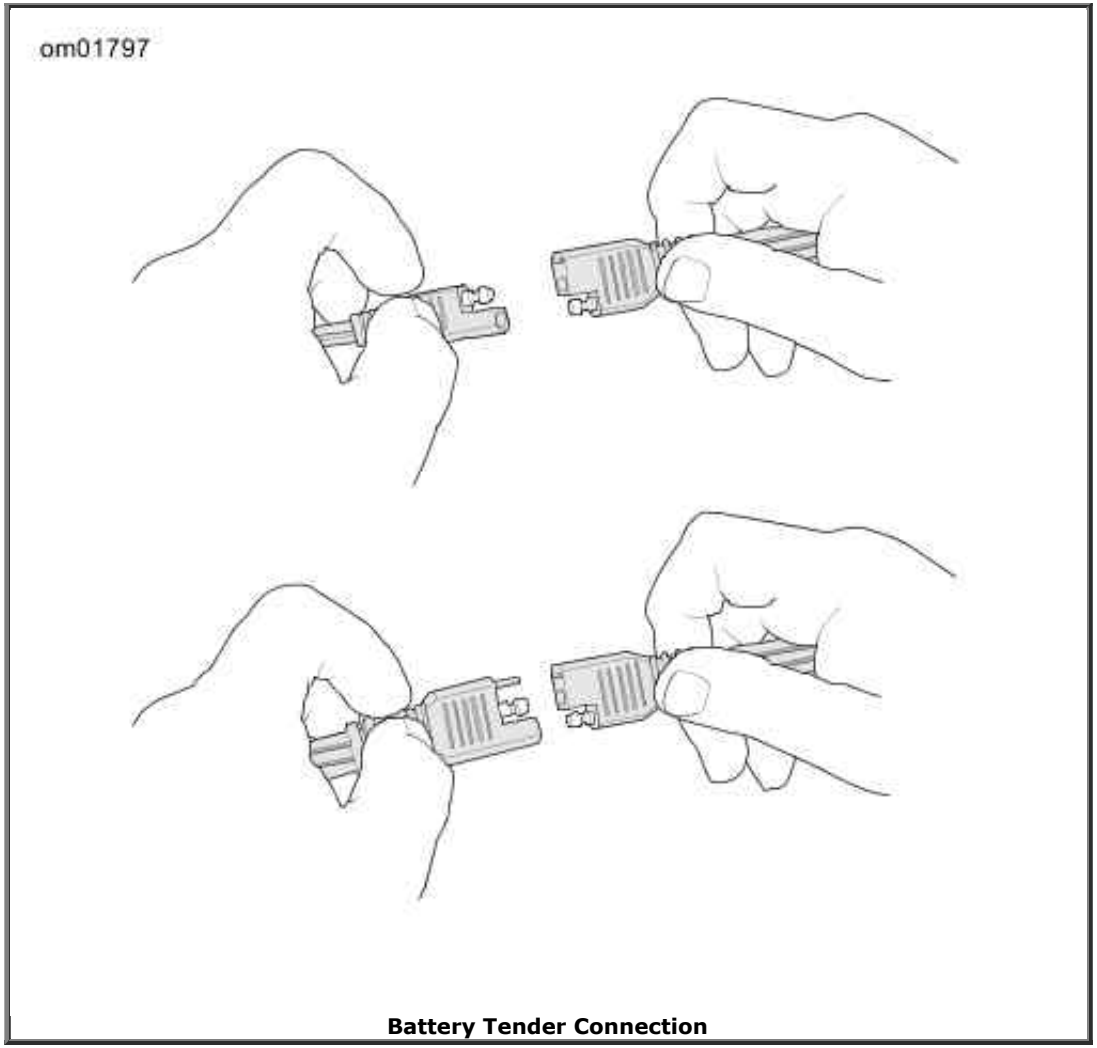

Battery Tender Connection

Battery

Disconnection and Removal

1. Remove seat.
2. See Top Caddy. Release ECM (1) from top caddy. Move out of the way.
3. If present, move purge solenoid (2) forward to release from top caddy.

4. **Models with security system:** Release HFSM antenna (3) from top caddy and move out of the way.
5. Release connectors (7) from anchors on top caddy.
6. Remove fasteners (5).
7. Cut cable straps (4). Move harnesses to allow more clearance for the top caddy.
8. Push top caddy forward to disengage front of caddy from front hold-down bracket. Lift and remove top caddy.
9. Disarm security system. See Arming and Disarming.

⚠WARNING

Disconnect negative (-) battery cable first. If positive (+) cable should contact ground with negative (-) cable connected, the resulting sparks can cause a battery explosion, which could result in death or serious injury. (00049a)

10. See Battery Compartment. Disconnect both battery cables, negative battery cable first.
11. Pull up battery strap to raise battery. When battery is extracted far enough to get a good grip, grasp battery and remove completely.

Installation and Connection

---

1. Run battery strap rearward across the bottom of the battery tray, then up and across the frame crossmember.
2. See Battery Compartment. Place the battery into the battery tray, terminal side forward.

⚠WARNING

Connect positive (+) battery cable first. If positive (+) cable should contact ground with negative (-) cable connected, the resulting sparks can cause a battery explosion, which could result in death or serious injury. (00068a)

CAUTION

Connect the cables to the correct battery terminals. Failure to do so could result in damage to the motorcycle electrical system. (00215a)

CAUTION

Do not over-tighten bolts on battery terminals. Use recommended torque values. Over-tightening battery terminal bolts could result in damage to battery terminals. (00216a)

3. Connect both battery cables, positive battery cable first. Tighten to 60-70 in-lbs (6.8-7.9 Nm).

CAUTION

Keep battery clean and lightly coat terminals with petroleum jelly to prevent corrosion. Failure to do so could result in damage to battery terminals. (00217a)

4. Apply a light coat of petroleum jelly or ELECTRICAL CONTACT LUBRICANT to both battery terminals.
5. Fold battery strap forward over top of battery.
6. See Top Caddy. Place top caddy into position and engage latch on hold-down bracket.
7. Fasten top caddy to frame crossmember with fasteners (5). Tighten to 72-96 in-lbs (8.1-10.9 Nm).
8. Engage HFSM antenna (3) and purge solenoid (2) on top caddy. Verify that all other connectors and harnesses are routed below the purge solenoid mounting tongue.
9. Secure connectors (7) to anchors on top caddy.
10. Latch ECM (1) into place on top caddy.
11. Secure harnesses to frame with cable straps (4).

⚠WARNING

After installing seat, pull upward on seat to be sure it is locked in position. While riding, a loose seat can shift causing loss of control, which could result in death or serious injury. (00070b)

12. Install seat.

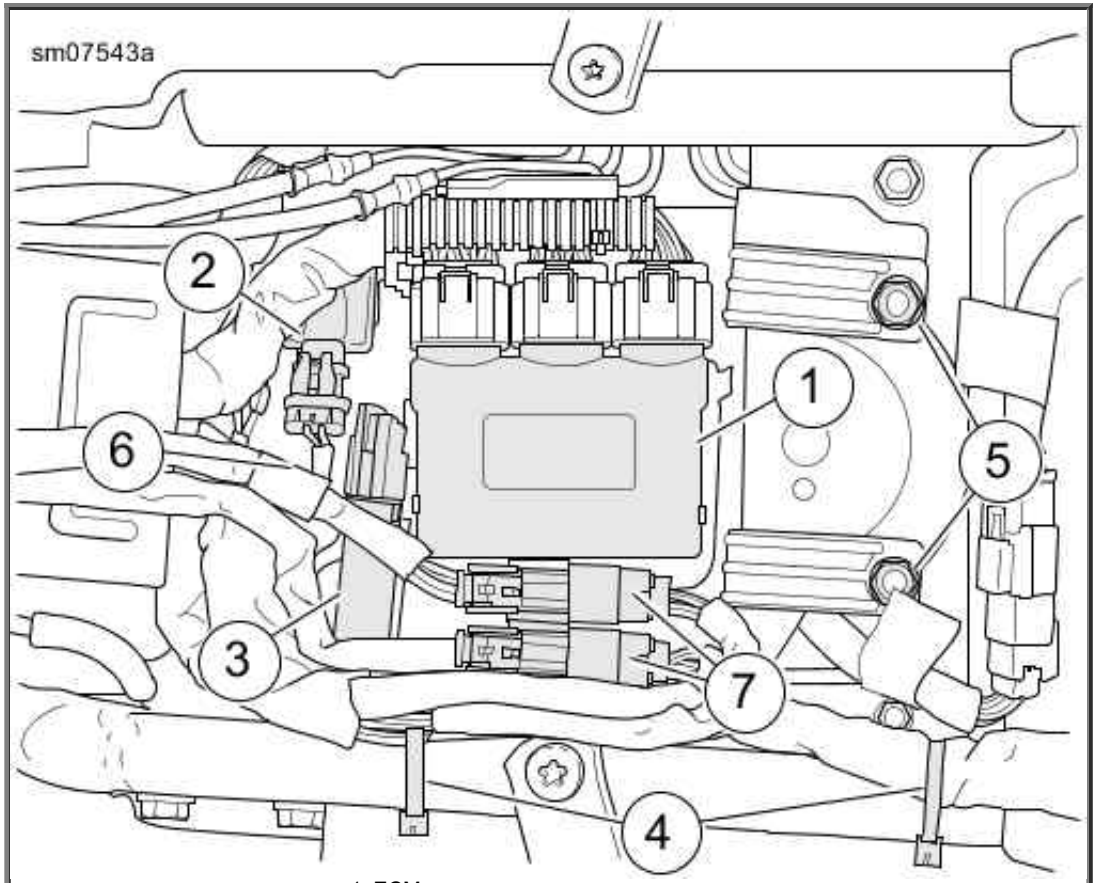

1. ECM
2. Purge solenoid
3. HFSM antenna
4. Cable straps
5. Screws (2)
6. Hold-down (not visible)
7. Connectors (2)

Top Caddy

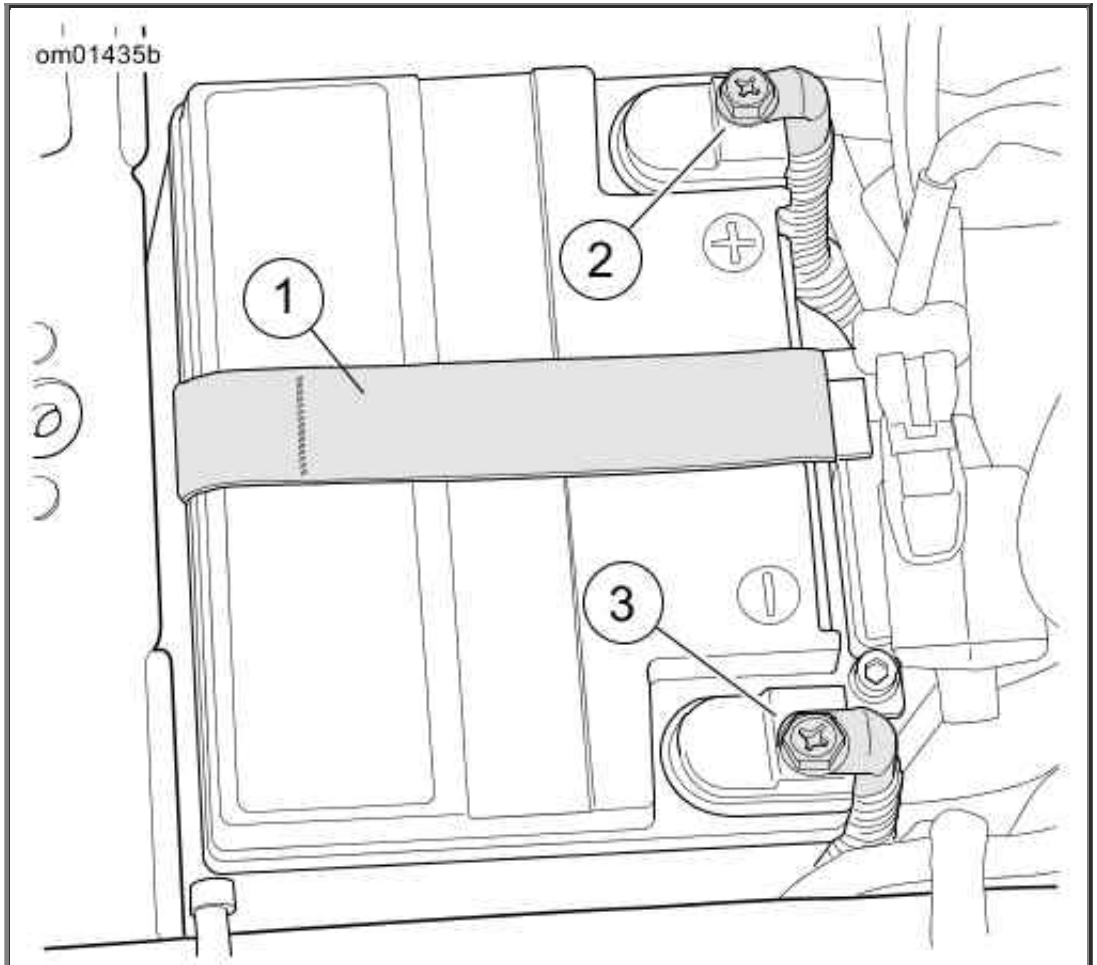

1. Lifting strap
2. Positive terminal
3. Negative terminal

Battery Compartment

Jump Starting

Jump starting a motorcycle is not recommended. However, in circumstances when a jump-start is necessary, use the following procedure.

⚠WARNING

Be sure jumper cables touch only appropriate battery terminals or ground. Allowing jumper cables to touch each other can result in sparks and a battery explosion, which could result in death or serious injury. (00072a)

⚠WARNING

Explosive hydrogen gas, which escapes during charging, could cause death or serious injury. Charge battery in a well-ventilated area. Keep open flames, electrical sparks and smoking materials away from battery at all times. KEEP BATTERIES AWAY FROM CHILDREN. (00065a)

CAUTION

Be sure both vehicles have the same battery voltage when jump starting. Connecting vehicles with different system voltages can result in vehicle damage. (00220c)

NOTES:

- *DO NOT jump-start from a running BOOSTER vehicle. The high output charging systems on some vehicles can damage the motorcycle's electrical components.*
- *Make sure the motorcycle and the BOOSTER vehicle are not touching one another.*

Connection

---

1. Turn off all unnecessary lamps and accessories.
2. See Jump Start Cable Connections. Connect one end of a jumper cable to the motorcycle DISCHARGED battery positive terminal (1).
3. Connect the other end of the same cable to the BOOSTER vehicle battery positive terminal (2).

⚠WARNING

Do not connect negative (-) cable to or near the discharged battery negative (-) terminal. Doing so could cause a spark and explosion, which could result in death or serious injury. (00073a)

4. Connect one end of a jumper cable to the BOOSTER vehicle battery negative terminal (3).

CAUTION

Do not connect the negative (-) cable to painted or chrome parts. Doing so could result in discoloration at the attachment point. (00221a)

5. Connect other end of the same cable (4) to a safe motorcycle ground away from the DISCHARGED battery.
6. Start the motorcycle.

Disconnection

1. See Jump Start Cable Connections. With the motorcycle continuing to run, remove the negative jumper cable motorcycle ground (4).
2. Remove the negative jumper cable from the BOOSTER vehicle battery negative terminal (3).
3. Remove the positive jumper cable from the BOOSTER vehicle battery positive terminal (2).
4. Remove the positive jumper cable from the DISCHARGED motorcycle battery positive terminal (1).

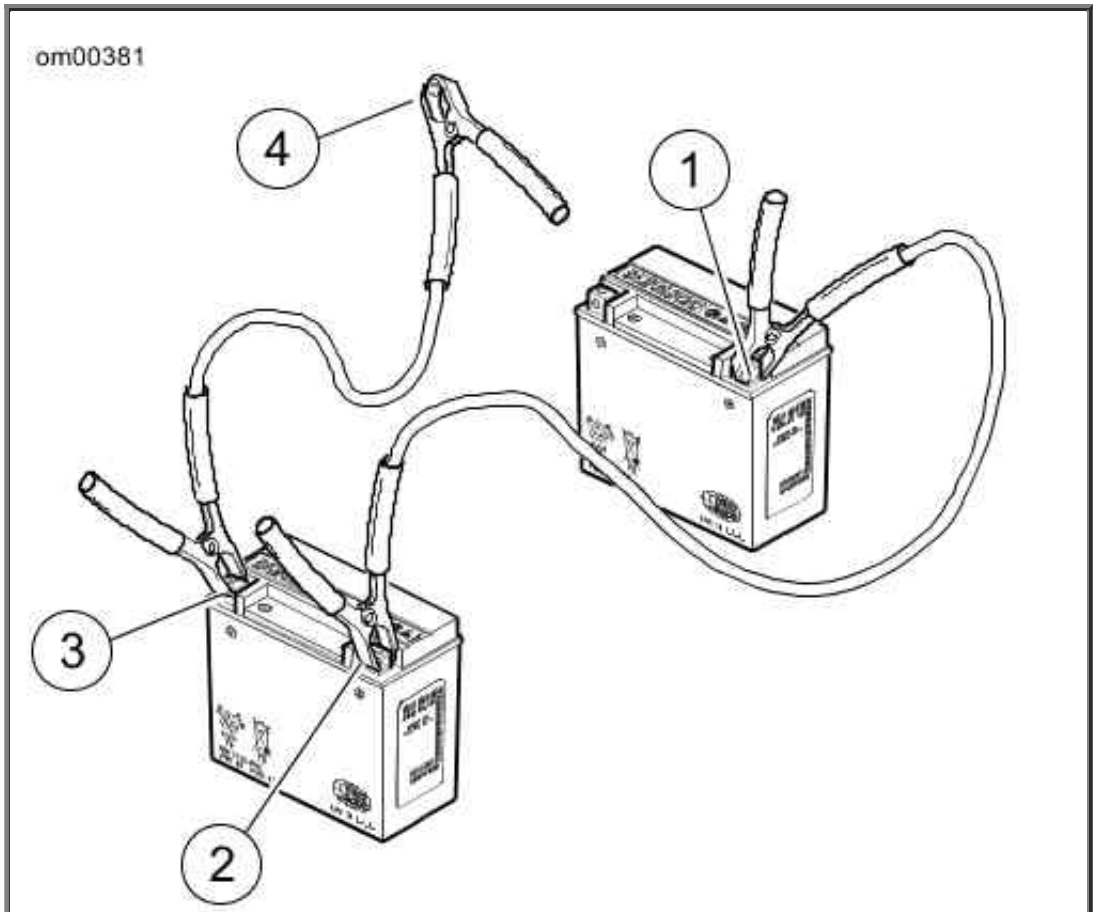

1. Discharged battery positive terminal
2. Booster battery positive terminal
3. Booster battery negative terminal
4. Ground

Jump Start Cable Connections

Side Covers

See Side Cover. Remove side covers to access fuses and other components.

Remove: Remove saddlebag. Pull side cover off.

Install: Align barbed studs on side cover with grommets in frame. Push in to secure cover.

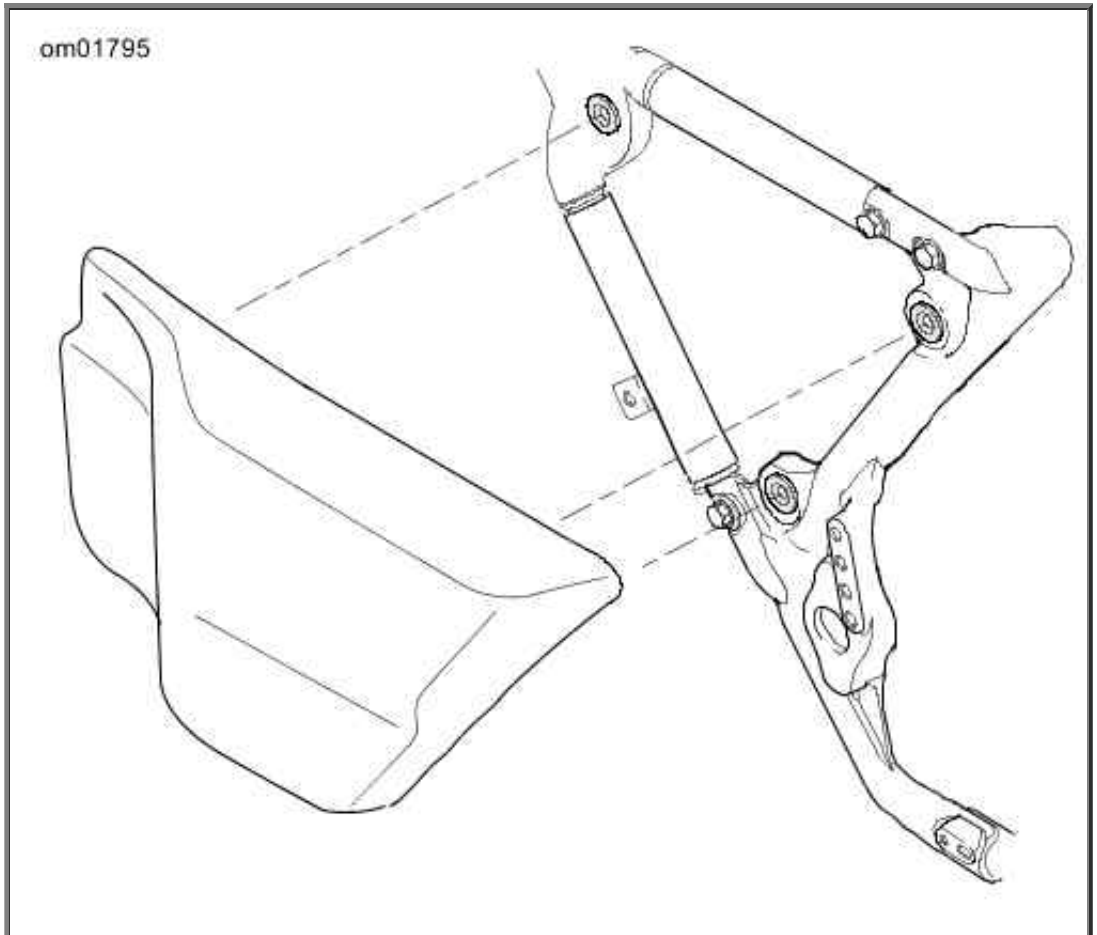

Side Cover

Fuses and Relays

Main Fuse

See Fuse Block (under left side cover). A 50 amp main fuse is located near the fuse block. Removing the main fuse disconnects power to all systems except the starter motor/solenoid.

If equipped with security system siren, turn the ignition switch ON with the hands-free fob present to disarm the security system before removing the main fuse or siren will sound.

NOTE:

Place the ignition switch in the OFF position before installing the main fuse.

System Fuses

CAUTION

Do not skip any steps for fuse replacement. Skipping fuse replacement steps can result in damage to the sound system and/or other motorcycle systems. (00223a)

See Fuse Block (under left side cover). Fuses are located under left side cover.

If fuse replacement does not correct a problem, see a Harley-Davidson dealer for electrical diagnosis.

1. Turn ignition switch OFF.
2. Remove left side cover. See Side Covers.
3. Press in tabs on the left and right sides of fuse block cover. Remove the cover.
4. See Fuses. Remove fuse and inspect the element.

CAUTION

Always use replacement fuses that are of the correct type and amperage rating. Use of incorrect fuses can result in damage to electrical systems. (00222a)

5. Replace the fuse if the element is burned or damaged.

   NOTE:

   Use automotive-type fuses for replacements. The fuse block has spare fuses.

6. Install the fuse block cover.
7. Install left side cover.

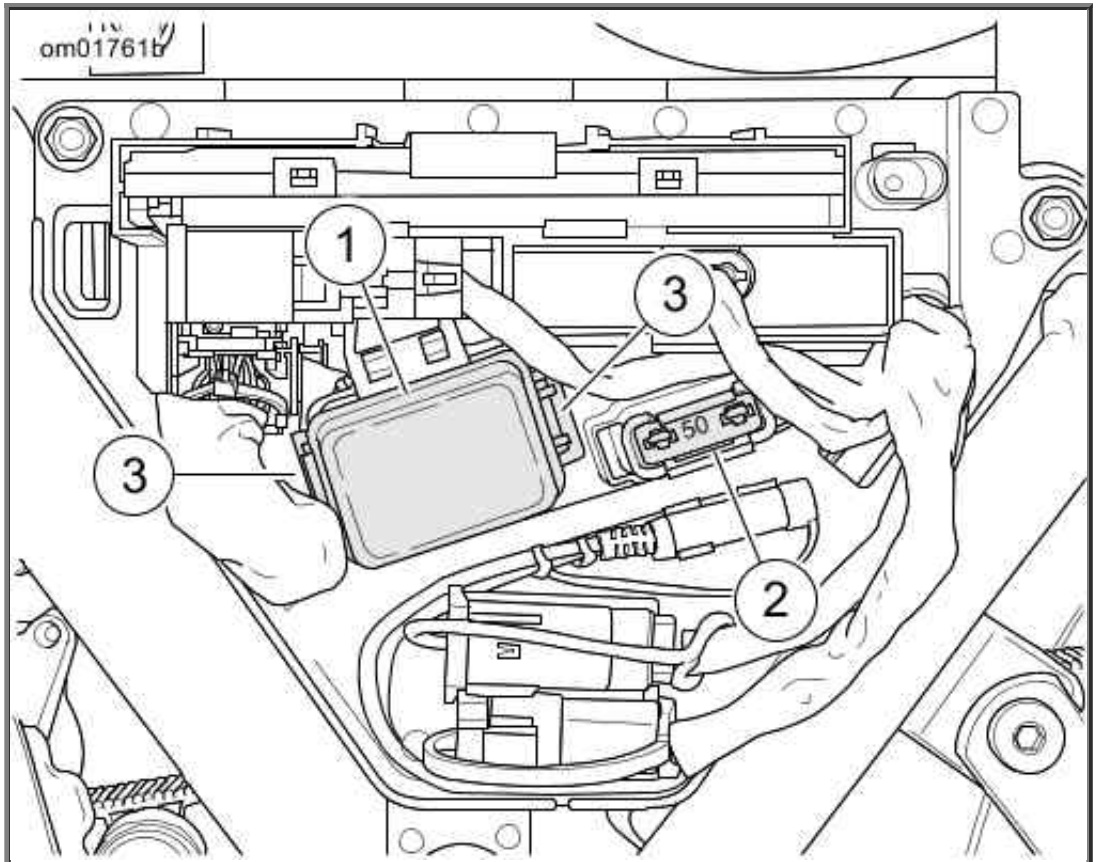

1. Fuse block cover
2. Main fuse
3. Press tabs to remove

Fuse Block (under left side cover)

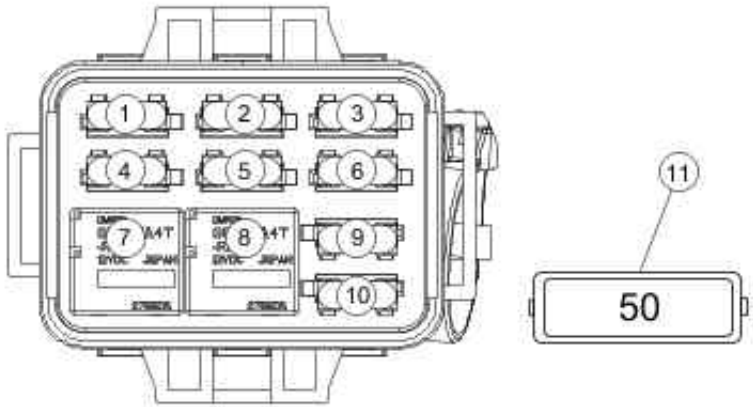

1. Radio power (20 A)
2. System power (7.5 A)
3. Battery (5 A)
4. P&A (20 A)
5. Cooling (10 A) (Twin-Cooled)
6. Spare (5 A)
7. P&A relay
8. Cooling relay (Twin-Cooled)
9. Spare (7.5 A)
10. Spare (20 A)
11. Main fuse (50 A)

Fuses

Seat

Removal

NOTE:

The seat screw may be difficult to access if the Tour-Pak is in the forward position. If necessary, see Tour-Pak to temporarily move the Tour-Pak.

1. Open Tour-Pak lid.
2. Open one of the saddlebag lids.
3. See Seat Strap Screw. Remove screw to release seat strap from bracket.

CAUTION

Detach passenger seat strap before removing seat. Failure to do so can result in damage to rear fender paint. (00225a)

4. **FLHRC:** See Strap Slots: FLHRC. Pull strap through slots in seat to remove.
5. Remove screw to release seat from top of rear fender.

   NOTE:

   Cover the seat mount mounting bracket with palm of hand to prevent damage to Tour-Pak.

6. See Seat Tongue and Seat Mounting Slot. Raise rear of seat. Pull seat rearward to disengage the tongue from the slot in the seat.

Installation

NOTE:

Cover the seat mount mounting bracket with palm of hand to prevent damage to Tour-Pak.

1. See Seat Tongue and Seat Mounting Slot. Align seat slot with tongue behind the fuel tank. Push seat forward to engage seat.
2. See Seat Strap Screw. Secure seat bracket to rear fender with screw. Tighten screw to 48-72 in-lbs (5.4-8.1 Nm).

⚠WARNING

After installing seat, pull upward on seat to be sure it is locked in position. While riding, a loose seat can shift causing loss of control, which could result in death or serious injury. (00070b)

3. Pull up on seat to check that it is properly secured.
4. **FLHRC:** See Strap Slots: FLHRC. Install strap through slots in seat.
5. See Seat Strap Screw. Insert strap in slot on seat strap bracket.
6. Install screw and washer. Tighten to 48-72 in-lbs (5.4-8.1 Nm).
7. Close the saddlebag lid.
8. Close Tour-Pak lid.

NOTE:

Install Tour-Pak back in desired position if removed. See Tour-Pak.

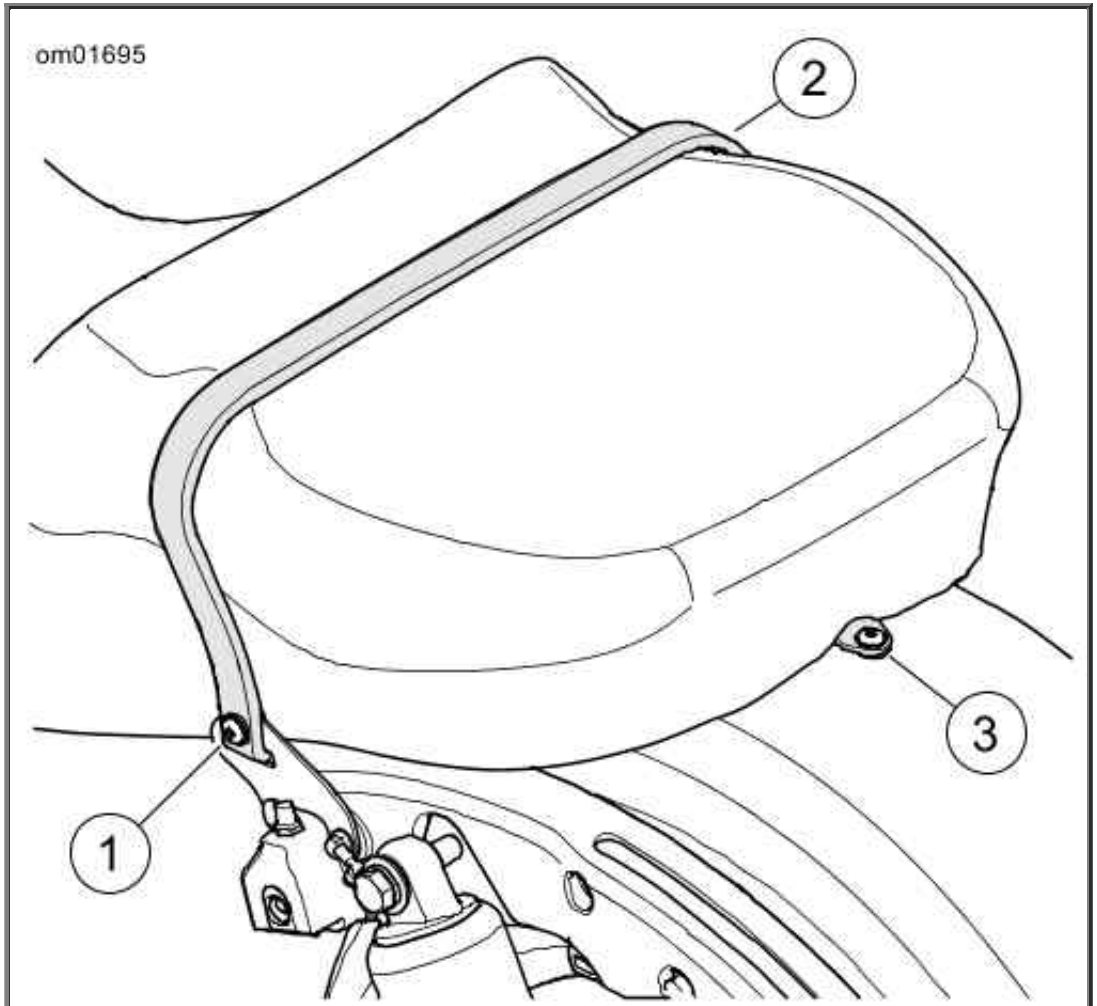

1. Seat strap screw
2. Seat strap
3. Seat screw

Seat Strap Screw

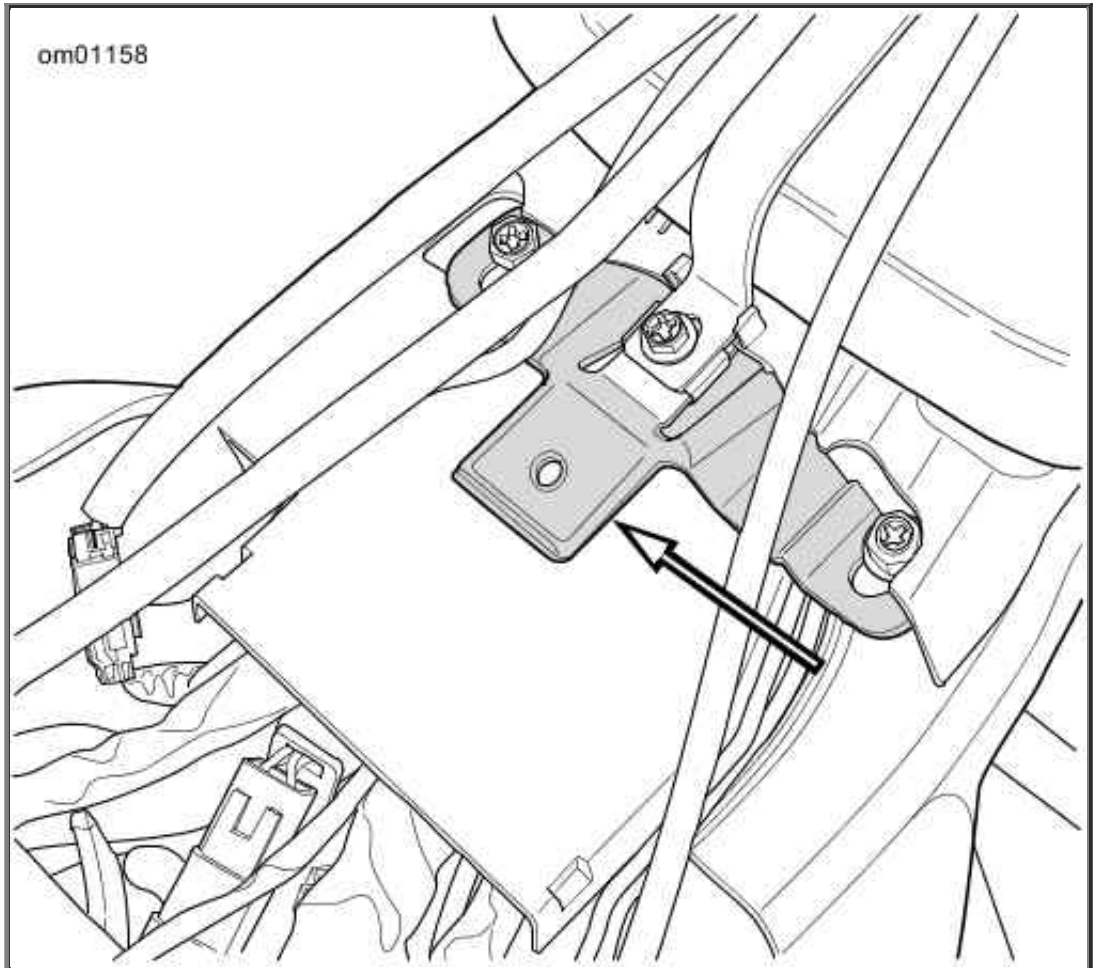

Seat Tongue

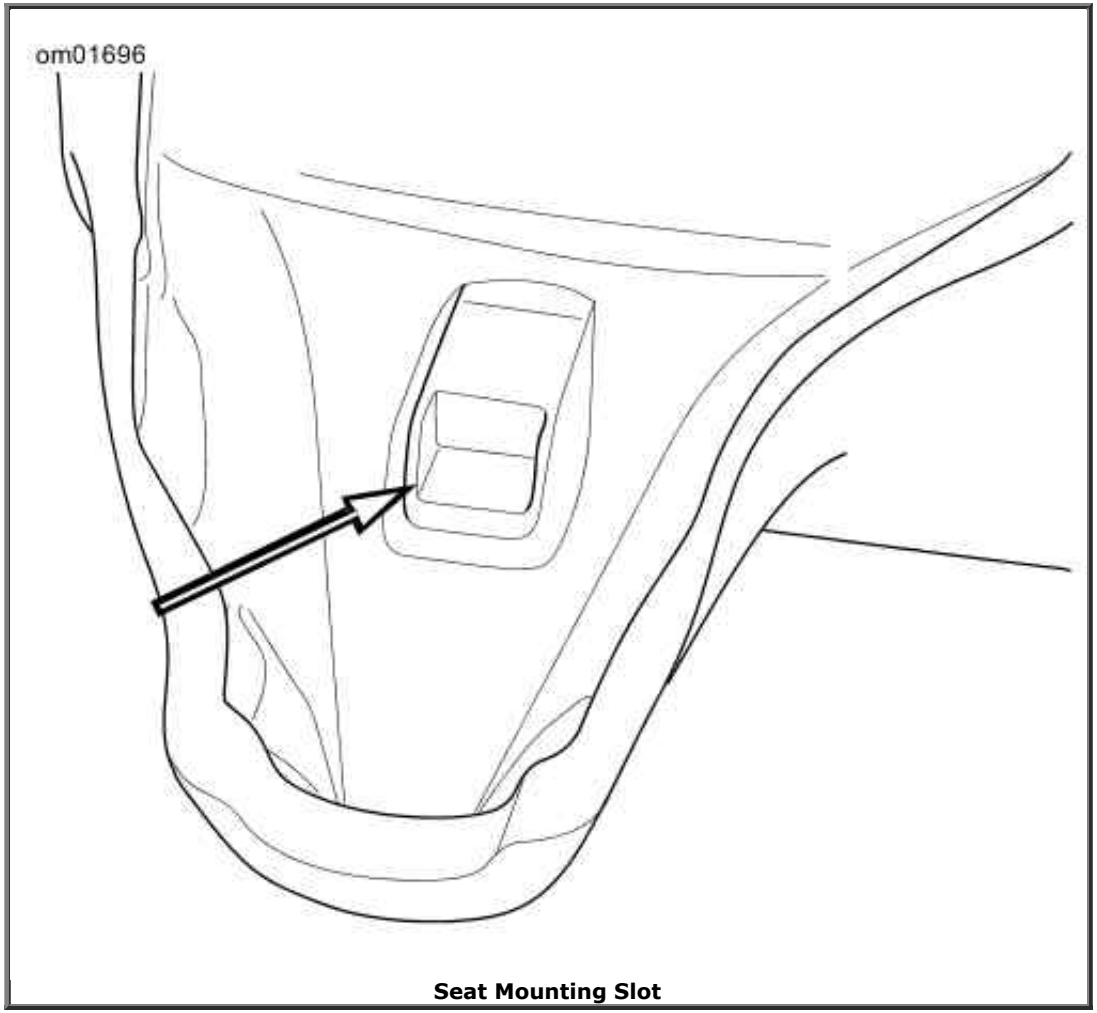

Seat Mounting Slot

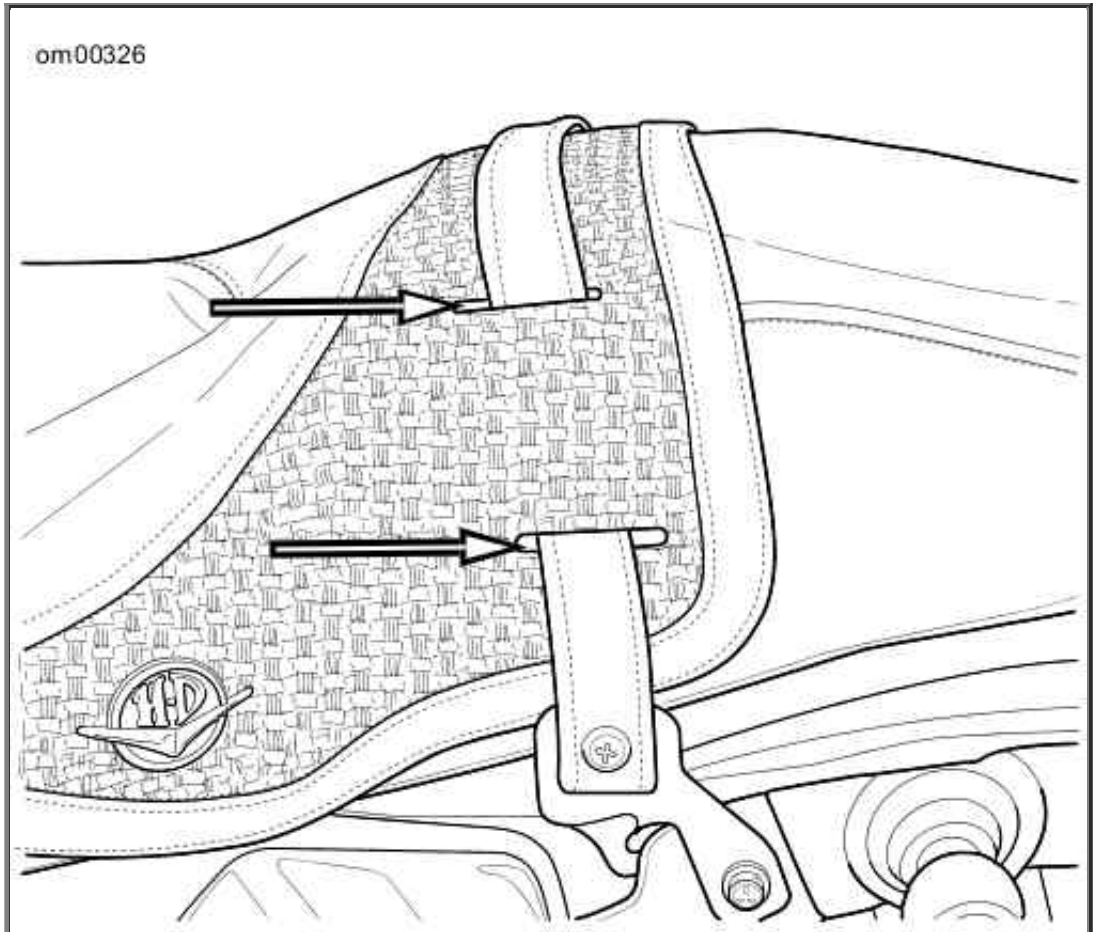

Strap Slots: FLHRC

Radio/CB Antenna

The antenna masts are threaded on mounts at the rear of the motorcycle. Unscrew the antennas if they must be removed. When installing, hand-tighten only.

The radio and CB antennas are different. For vehicles with a CB, install the CB antenna (marked with the letters "CB" at the base of the mast) on the right side of the motorcycle. Installing the incorrect antenna for the radio or CB results in degraded reception.

Motorcycle Storage

Placing Motorcycle in Storage

CAUTION

Proper storage is important for the trouble-free operation of your motorcycle. See your Owner's Manual for storage recommendations or see a Harley-Davidson dealer. Improper storage procedures can lead to equipment damage. (00046a)

If the motorcycle is not to be ridden for several months, such as during the winter season, there are several tasks which must be performed. These steps protect parts against corrosion, preserve the battery and prevent the build-up of gum and varnish in the fuel system.

If possible, store the motorcycle in a dry area with a stable temperature. Keep the motorcycle away from harsh chemicals or other substances such as fertilizers or salt.

⚠WARNING

Do not store motorcycle with gasoline in tank within the home or garage where open flames, pilot lights, sparks or electric motors are present. Gasoline is extremely flammable and highly explosive, which could result in death or serious injury. (00003a)

NOTE:

Make a list of everything you do and fasten it to a hand grip. When you take the motorcycle out of storage, this list is your reference/checklist to get your motorcycle in operating condition.

1. Fill fuel tank. Add fuel stabilizer following manufacturer's instructions.
2. Warm motorcycle to operating temperature. Change oil and turn engine over to circulate the **new** oil.
3. Check and adjust belt if necessary.
4. Check tire pressure. Refer to Specified Tires for specified pressure.
5. Protect the body panels, engine, chassis and wheels from corrosion. Follow the cosmetic care procedures described in the Care and Cleaning section before storage.
6. Prepare battery for storage. See Battery Maintenance.

⚠WARNING

Explosive hydrogen gas, which escapes during charging, could cause death or serious injury. Charge battery in a well-ventilated area. Keep open flames, electrical sparks and smoking materials away from battery at all times. KEEP BATTERIES AWAY FROM CHILDREN. (00065a)

NOTES:

- *If the motorcycle is being stored with the security system armed, connect a 750mA SUPERSMART BATTERY TENDER 66000038 to maintain battery charge.*
- *If the motorcycle is being stored with the security system disarmed, turn on the motorcycle while the hands-free fob is present. This operation prevents the optional siren from sounding. Disconnect the negative battery cable and prepare battery for storage. See Battery Maintenance.*

7. Use a material such as light canvas that can breathe to cover the motorcycle. Plastic materials that do not breathe promote the formation of condensation.

8. Remove the antennas or allow them to protrude through the cover, if equipped. Do not bend or tuck antennas under the cover.

Removing Motorcycle from Storage

⚠WARNING

The clutch failing to disengage can cause loss of control, which could result in death or serious injury. Prior to starting after extended periods of storage, place transmission in gear and push vehicle back and forth several times to assure proper clutch disengagement. (00075a)

NOTE:

Lubricants contaminated with water have a milky white appearance. Replace contaminated lubricants with the appropriate ***new*** *Harley-Davidson lubricant.*

1. Charge the battery.
2. Install battery. See Battery Maintenance.
3. Run motorcycle until engine is at normal operating temperature. Turn off engine.
4. Check engine oil level.
5. Check lubricant level.
6. Check controls to make sure that they are operating properly. Operate the front and rear brakes, throttle, clutch and shifter.
7. Check steering for smoothness by turning the handlebars through the full operating range.

⚠WARNING

Be sure tires are properly inflated, balanced, undamaged, and have adequate tread. Inspect your tires regularly and see a Harley-Davidson dealer for replacements. Riding with excessively worn, unbalanced, improperly inflated, overloaded or damaged tires can lead to tire failure and adversely affect stability and handling, which could result in death or serious injury. (00014b)

8. Check tire pressure. Refer to Specified Tires for specified pressure.
9. Check overall tire condition. See Tires.
10. Test all switches and lights for proper operation.
11. Check for any fluid leaks.

CAUTION

Turn engine over a few times to be sure there is no oil in the crankcase and that all oil has

been pumped back into the oil tank. Stop engine and re-check oil level. Failure to do so can result in engine damage. (00071a)

Care and Cleaning

Cleaning and General Care

Clean and protect the cosmetic surfaces on your motorcycle as often as possible to inhibit rust and corrosion. After the motorcycle is cleaned, polish and seal the motorcycle to create a barrier of protection against the weather and harsh substances.

Harley-Davidson cleaning products are tested extensively for use on vehicle surfaces. These products are formulated to be compatible with one another. See a Harley-Davidson dealer to purchase recommended cleaning products. Refer to Recommended Cleaning and Care Products and Recommended Surface Care Products.

NOTES:

- *Use recommended surface care products. Do not use paper towels, terry cloths, cloth diapers or other materials with nylon fibers which can create fine scratches to surfaces.*
- *Dirty cleaning materials can scratch finished surfaces. Use only clean sponges and detailing cloths to prevent damage to the motorcycle.*
- *For repair of scratched surfaces, see a Harley-Davidson dealer.*

⚠WARNING

Observe warnings on labels of cleaning compounds. Failure to follow warnings could result in death or serious injury. (00076a)

⚠WARNING

Do not wash brake discs with cleaners containing chlorine or silicone. Cleaners containing chlorine and silicone can impair brake function, which could result in death or serious injury. (00077a)

CAUTION

Do not use a pressure washer to clean motorcycle. Using a pressure washer can result in equipment damage. (00489c)

CAUTION

Use of abrasive products or powered buffing equipment will cause permanent cosmetic damage to body panels. Use only recommended products and techniques outlined in this

manual to avoid damaging body panels. (00245b)

Recommended Cleaning and Care Products

PRODUCT PART NO.	PURPOSE	FRAME	BODY PANELS	WHEELS	DENIM FINISH	OTHER
BARE ALUMINUM WHEEL PROTECTANT - INDIVIDUAL WIPES 93600063	Corrosion control for bare aluminum surfaces.	No	No	Yes	No	"Burst" collection
BARE METAL POLISH 93600028 (U.S.) 93600083 (Non-U.S.)	Polishes non-clear coated polished aluminum or polished stainless steel surfaces.	As applicable				
BLACK LEATHER REJUVENATOR 93600033 (U.S.) 93600081 (Non-U.S.)	Rejuvenates black leather products so they look brand new.	No	No	No	No	Black leather goods
BOOT MARK REMOVER 93600001 (U.S.) 93600069 (Non-U.S.)	Removes boot marks from chrome exhaust components.	No	No	No	No	Exhaust system
BUG REMOVER 93600022 (U.S.) 93600075 (Non-U.S.)	Removes bugs from metal, plastic or painted surfaces. Also available as individual wipes (93600065).	Yes	Yes	Yes	Yes	
CHROME CLEAN & SHINE 93600031 (U.S.) 93600082 (Non-U.S.)	Shines chrome-plated surfaces and cleans brushed aluminum or stainless steel surfaces.	As applicable				
DENIM PAINT CLEANER 93600064 (U.S.) 93600078 (Non-U.S.)	Waterless quick cleaner and detailer.	Yes	Yes	Yes	Yes	
ENGINE BRIGHTENER 93600002 (U.S.) 93600068 (Non-U.S.)	Rejuvenates wrinkle black engine finish.	No	No	No	No	Wrinkle black engines
GLAZE POLY SEALANT 93600026 (U.S.) 93600079 (Non-U.S.)	Provides a protective barrier for glossy paint surfaces and chrome.	Yes	Yes	As applicable	No	
GLOSS DETAILER	Produces high gloss with UV protection. Allows chrome to breathe, unlike wax. Good for windshields. Also available as individual wipes	Yes	Yes	Yes	No	

93600062 (U.S.) 93600073 (Non-U.S.)	(97401-10).					
HARLEY TRAVEL CARE KIT 93600007	Travel size cleaning and care products.	Yes	Yes	Yes	Yes	
LEATHER PROTECTANT 93600034 (U.S.) 93600080 (Non-U.S.)	Weatherproofs and preserves leather products.	No	No	No	No	Leather goods
QUICK WASH 93600012 (U.S.) 93600071 (Non-U.S.)	A quick wash for a lightly soiled motorcycle. Cleans all surfaces, sheeting action prevents spots.	Yes	Yes	Yes	Yes	
SCRATCH & SWIRL REPAIR 93600025 (U.S.) 93600074 (Non-U.S.)	Removes fine scratches and swirls.	Yes	Yes	No	No	
SEAT, SADDLEBAG & TRIM CLEANER 93600010	Cleans and conditions vinyl, leather and plastic. Use on seats, saddlebags, inner fairings and any other trim.	No	No	No	No	Seats, saddlebags and trim
SPRAY CLEANER & POLISH 93600029 (U.S.) 93600084 (Non-U.S.)	Aerosol quick cleaner and detailer. Reduces static attraction to dust. Works great for removing bugs.	Yes	Yes	Yes	No	
SUNWASH BIKE SOAP 93600023 (U.S.) 93600077 (Non-U.S.)	Thorough washing of all surfaces with a wash mitt. Reduces hard water spots when washing a motorcycle in the sun.	Yes	Yes	Yes	Yes	
WHEEL & TIRE CLEANER 93600024 (U.S.) 93600076 (Non-U.S.)	Removes brake dust and road grime from wheels, tires and whitewalls. Do not use on frames or anodized parts.	No	No	Yes	No	Black-coated exhaust pipes and mufflers
WINDSHIELD CLEANER 93600067	Quick windshield cleaner in convenient single use wipe.	Yes	Yes	No	No	Windshield
WINDSHIELD WATER REPELLENT 93600032 (Global)	Allows water to bead and dissipate from the windshield.	No	No	No	No	Windshield

Recommended Surface Care Products

PRODUCT	PURPOSE

PART NO.	
BUG EATER SPONGE 93600110	When paired with water and BUG REMOVER, the BUG EATER SPONGE breaks down and dissolves baked on bugs and road grime.
CLEANING BRUSH KIT 94844-10	Brush kit for detailing your motorcycle.
DETAILING SWABS 93600107	Large cotton swabs for cleaning crevices and detailed surfaces.
DISPOSABLE DETAILING SOFT CLOTH 93600114	Non-absorbent cloth for applying and buffing SWIRL & SCRATCH REPAIR and GLAZE POLY SEALANT to painted surfaces or chrome.
HARLEY WASH BUCKET 94811-10	Wash bucket with apron to hold your supplies. Includes GRIT GUARD insert.
HOG BLASTER MOTORCYCLE DRYER 94651-09 (120 V) 94865-09 (220 V)	Blows a stream of warm dry filtered air. Reduces streaks and water spots.
MICROFIBER DETAILING CLOTH 94663-02	Highly absorbent detailing cloth for polishing and sealing. Contains no nylon fibers.
SYNTHETIC DRYING CHAMOIS 94791-01	Extra-absorbent, non-streaking synthetic towel for drying. Dampen towel and wring out before using for greatest absorbency.
WASH MITT 94760-99	Absorbent wool-blended washing mitten.
WHEEL & SPOKE BRUSH 43078-99	Cone-shaped scrub brush for wheels.

Washing the Motorcycle

Use only recommended cleaning and care products. Refer to Recommended Cleaning and Care Products and Recommended Surface Care Products.

NOTE:

During rinsing and washing, avoid direct spray on electrical components and any luggage or saddlebag sealing areas (if equipped). Avoid spraying water under leather saddlebag covers (if equipped).

Preparation

1. Allow motorcycle to cool before rinsing or washing. Spraying water on hot surfaces can leave water spots and mineral deposits.
2. Rinse the motorcycle from the bottom up.
3. To loosen dried bugs or hardened dirt, allow surfaces to soak under a damp towel.

Cleaning Wheels and Tires

1. Rinse wheel and tire surfaces. Avoid splashing brake dust on chrome or painted parts.
2. Apply WHEEL & TIRE CLEANER. Allow cleaner to set for one minute.
3. Clean the wheel with a BUG EATER SPONGE or WHEEL & SPOKE BRUSH. Thoroughly scrub all brake dust and other sediments off the wheel. Accumulated brake dust can trap moisture and dirt, which leads to wheel corrosion.
4. Rinse well.

Washing the Motorcycle

NOTE:

See the appropriate instructions in this section for cleaning leather, denim (flat) finishes, windshields or other special surfaces.

1. If necessary, use BUG REMOVER to remove bug splatters.
    a. Rinse the affected surfaces during preparation.
    b. Spray the area with BUG REMOVER.
    c. Wait one minute while the BUG REMOVER penetrates the bug splatters.
    d. Use the BUG EATER SPONGE while washing to easily remove bugs.
2. Prepare the wash.
    a. Fill a HARLEY WASH BUCKET with clean water.
    b. Add SUNWASH BIKE SOAP, following the directions on the package.
    c. Soak the WASH MITT and/or a BUG EATER SPONGE in the SUNWASH solution.
3. Wash all surfaces starting at the top working down toward the ground.
4. Rinse the motorcycle twice in both directions:
    a. Rinse from the bottom up.
    b. Rinse from the top down.

Drying the Motorcycle

1. Dry the surfaces from the top down using a SYNTHETIC DRYING CHAMOIS or a HOG BLASTER MOTORCYCLE DRYER. Avoid using any type of forced air on speakers or other sensitive components.
2. Dampen chamois in clean water and wring out the excess. The chamois is more absorbent when wet.
3. Wipe across the vehicle surface.
4. Repeat as necessary until surface is dry.

Polishing and Sealing

NOTE:

If motorcycle has denim finish, skip the Polishing and Sealing procedure.

1. Apply GLAZE POLY SEALANT with a DISPOSABLE DETAILING SOFT CLOTH or MICROFIBER DETAILING CLOTH, following the instructions on the package.
2. Buff with a DISPOSABLE DETAILING SOFT CLOTH.
3. Polish and seal the wheels to prevent corrosion.

Audio System Care

Use only Harley-Davidson recommended products and methods to keep the radio, speakers and other audio system components clean and in good condition. Do not use any abrasives, polishes or rubbing compounds to clean the screen or other components. Do not use any ammonia-based cleaners on the screen. Use of other products or methods may cause damage to components.

Replaceable Screen Protector

Boom! Box 6.5GT radios have a replaceable screen protector. Keep the protector on the screen at all times. Damage to the screen due to use without the protector will not be covered under warranty. Remove and replace the protector if it becomes dull, scratched or worn.

Cleaning the Radio

Spray a light amount of HARLEY GLOSS on a MICROFIBER DETAILING CLOTH. Be careful to gently remove any sediments without rubbing them into the screen. Apply circular motions from the center and outwards. Use a dry MICROFIBER DETAILING CLOTH to dry the screen. Repeat the process as necessary.

NOTE:

Do not use any screen enhancing chemicals or products. These can damage the screen surface.

Speaker Care

If a haze develops on speakers with a protective grille, use HARLEY SEAT, SADDLEBAG, AND TRIM CLEANER and a SOFTCLOTH or SOFT DETAILING PAD to clean. Do not apply wax or any other similar products on speaker grilles.

Do not use compressed or forced air on speakers.

Vehicles with saddlebag speakers are designed to prevent water intrusion and to allow water to drain during washing or riding in all weather. To remove any standing water from saddlebag speakers, open the saddlebags and gently shake any remaining water from the speakers.

Denim Finish Care

Some motorcycles have a denim (flat or matte) finish. The denim finish has qualities which differ from high gloss finishes on all other Harley-Davidson motorcycles. Like denim fabric, denim paint will burnish or mar with age and use, thus adding character and personality to the finish. Refer to Recommended Cleaning and Care Products for recommended products.

- If scratched, the color coat of paint does nick/scuff and these marks cannot be rubbed out.
- If polished, the finish will become less matte and more glossy over time.

How to Clean

For light deposits: Use DENIM PAINT CLEANER and a MICROFIBER DETAILING CLOTH. This treatment helps remove finger prints and light soil.

For heavier deposits: Use either SUNWASH BIKE SOAP and a clean WASH MITT or QUICK WASH. Rinse thoroughly with clean water.

Leather and Vinyl Care

CAUTION

Do not use bleach or detergents containing bleach on saddlebags, seats, tank panels or painted surfaces. Doing so can result in equipment damage. (00229a)

Do not use ordinary soap to clean leather or fur. It could dry or remove the oils from the leather.

Leather, vinyl and other synthetic surfaces must be periodically cleaned and treated to maintain its appearance and extend its life. Clean and treat these surfaces once a season or more frequently under adverse conditions.

These surfaces are not designed for long-term exposure to inclement weather. Protect these surfaces with an HARLEY-DAVIDSON SEAT RAIN COVER or MOTORCYCLE STORAGE COVER (sold separately).

1. Vacuum or blow dust off surface.
2. Thoroughly clean surfaces with SEAT, SADDLEBAG & TRIM CLEANER, following directions on the bottle.
3. Allow the material to dry naturally and completely at room temperature before applying other products to the material. Do not use artificial means to dry the material quickly.
4. For leather only, rejuvenate faded black surfaces with BLACK LEATHER REJUVENATOR. Apply LEATHER PROTECTANT to weatherproof and preserve the leather.

NOTE:

Many Harley-Davidson accessories and seats are made of either treated or untreated leather or have leather inserts. Natural materials age differently and require different care than man-made materials. Seat covers and panels made of leather gain "character", such as wrinkles, with age. Leather is porous and organic and each leather product settles into its own distinct form with use. Your leather product matures into its own custom shape and style from the sun, rain and time. This maturing is natural and enhances the custom quality of your Harley-Davidson motorcycle.

Fairing Splitstream Vent Care

Keep the vent free of foreign objects. Periodically clean the vent mechanism to remove dirt, bugs and leaves, and to keep all parts from sticking. Clean the button and vent door if they become difficult to open or close.

1. With the vent door closed (button up), spray clean water into the area under the button.

⚠WARNING

Compressed air can pierce the skin and flying debris from compressed air could cause serious eye injury. Wear safety glasses when working with compressed air. Never use your hand to check for air leaks or to determine air flow rates. (00061a)

2. Blow low-pressure air in the same direction.
3. Using mild soapy water and a soft brush, remove dirt, leaves and bugs from vent duct and vent door.
4. Operate vent and repeat cleaning as necessary.

Whitewall Tires

Use HARLEY-DAVIDSON WHEEL & TIRE CLEANER to clean whitewall tires following directions on the bottle.

Wheel Care

Wheels can corrode or be cosmetically damaged if they are not properly cleaned, polished and preserved. Cleaning and sealing wheels with the proper treatment guards against pitting, corrosion, spots and stains. Harley-Davidson recommends that wheels be cared for weekly. Corrosion to wheels is not considered a defect in materials or workmanship.

NOTE:

Bare aluminum wheels do not have a protective coating and corrode unless properly treated. Apply BARE ALUMINUM WHEEL PROTECTANT when purchasing the motorcycle and at least twice per year to prevent cosmetic damage.

Keep wheels clean from harsh chemicals, acid-based wheel cleaners, salt and accumulated brake dust. After washing wheels with WHEEL & TIRE CLEANER, use the polish and sealing products according to the type of wheels. Refer to Wheel Polish and Sealing Products.

Wheel Polish and Sealing Products

WHEELS	PRODUCT	DESCRIPTION
Anodized	GLAZE POLY SEALANT	Cleans surface, removes fine scratches. Provides a breathable sealant against acid, chemicals, salt and brake dust.
	GLOSS DETAILER	Seals and protects against harsh chemicals, salt and other sediments to prevent corrosion.
Bare aluminum	BARE ALUMINUM WHEEL	Creates a protective coating for bare aluminum wheels to prevent oxidation. Individual

Bare aluminum	BARE ALUMINUM WHEEL PROTECTANT	Creates a protective coating for bare aluminum wheels to prevent oxidation. Individual wipe.
Chrome	CHROME CLEAN & SHINE	Non-abrasive cleaner to brighten chrome wheels.
	GLOSS DETAILER	Seals and protects against harsh chemicals, salt and other sediments to prevent oxidation.
Polished aluminum or stainless steel	BARE METAL POLISH	Microabrasive polish to refurbish polished wheels. Do not use on chrome.

Windshield Care

CAUTION

Polycarbonate windscreens/windshields require proper attention and care to maintain. Failure to maintain polycarbonate properly can result in damage to the windscreen/windshield. (00483d)

CAUTION

Use only Harley-Davidson recommended products on Harley-Davidson windshields. Do not use harsh chemicals or rain sheeting products, which can cause windshield surface damage, such as dulling or hazing. (00231c)

- Powdered, abrasive or alkaline cleanser can damage windscreen/windshields. Ammonia-based window cleaners cause permanent yellow effects to windshields.
- Do not use gas station windshield cleaner as finish can be damaged.
- Do not use a brush or squeegee as finish can be damaged.
- Do not clean in hot sun or high temperature.

Windshields require special care. However, windshields can be washed with WINDSHIELD CLEANER - INDIVIDUAL WIPES, SUNWASH BIKE SOAP or QUICK WASH when washing the entire motorcycle. Refer to Recommended Cleaning and Care Products.

NOTES:

- *To treat windshields with water repellent use WINDSHIELD WATER REPELLENT.*
- *Use BUG REMOVER to soft bug splatters. Wipe clean with a BUG EATER SPONGE.*
- *Covering windshields with a clean, wet cloth for approximately 15-20 minutes before washing makes dried bug removal easier.*

1. Use WINDSHIELD CLEANER to detail windshields.
2. Wipe dry with a clean MICROFIBER DETAILING CLOTH.

NOTE:

To minimize swirl marks, clean windshield when the motorcycle is cool and parked in the shade. Faint swirl marks are normal. Swirl marks are more visible on tinted windshields.

Troubleshooting

Troubleshooting: General

WARNING

The troubleshooting section of the Owner's Manual is a guide to diagnose problems. Read the service manual before performing any work. Improper repair and/or maintenance could result in death or serious injury. (00080a)

Use the following checklists for troubleshooting. Carefully check each cause because more than one condition can cause trouble.

Engine

Starter Does Not Operate or Does Not Turn Engine Over

1. Engine off/run switch off.
2. Ignition switch off.
3. Discharged battery or loose or corroded connections (solenoid chatters).
4. Clutch lever not squeezed against handlebar or transmission not in neutral.
5. Jiffy stand not in retracted position (for models equipped with jiffy stand interlock).
6. Blown fuse.

Engine Turns Over But Does Not Start

1. Fuel tank empty.
2. Fuel filter clogged.
3. Discharged battery or loose or damaged battery terminal connections.
4. Fouled spark plugs.
5. Spark plug cable connections loose or in bad condition and shorting.
6. Loose or corroded wire or cable connection at coil or battery.
7. Fuel pump inoperative.

8. Blown fuse.

Starts Hard

---

1. Spark plugs in bad condition, have improper gap or are partially fouled.
2. Spark plug cables in bad condition and leaking.
3. Battery nearly discharged.
4. Loose wire or cable connection at one of the battery terminals or at coil.
5. Engine oil too heavy (cold weather).
6. Fuel tank vent plugged or fuel line closed off, restricting fuel flow.
7. Water or dirt in fuel system or filter.
8. Fuel pump inoperative.

Starts But Runs Irregularly or Misses

---

1. Spark plugs in bad condition or partially fouled.
2. Spark plug cables in bad condition and leaking.
3. Spark plug gap too close or too wide.
4. Battery nearly discharged.
5. Damaged wire or loose connection at battery terminals or coils.
6. Intermittent short circuit due to damaged wire insulation.
7. Water or dirt in fuel system or filter.
8. Fuel vent system plugged. See dealer.
9. One or more injectors fouled.

A Spark Plug Fouls Repeatedly

---

1. Fuel mixture too rich.
2. Incorrect spark plug for service

Pre-ignition or Detonation (Knocks or Pings)

---

1. Incorrect fuel.
2. Incorrect spark plug for service

Overheats

1. Insufficient oil supply or oil not circulating.
2. Heavy carbon deposit from lugging engine. See dealer.
3. Insufficient air flow over cylinder heads during extended periods of idling or parade duty.

Excessive Vibration

1. Rear fork pivot shaft loose. See dealer.
2. Front engine mounting bolts loose. See dealer.
3. Front chain or links tight as a result of insufficient lubrication or belt badly worn.
4. Engine to transmission mounting bolts loose (applicable models). See dealer.
5. Damaged frame. See dealer.
6. Wheels and/or tires damaged. See dealer.
7. Vehicle not properly aligned. See dealer.

Engine Oil Not Circulating (Oil Pressure Lamp Lit)

1. Insufficient or diluted oil supply.
2. Oil feed clogged with ice and sludge in freezing weather.
3. Grounded oil signal switch wire or faulty signal switch. See dealer.
4. Damaged or improperly installed check valve. See dealer.
5. Oil pump problem. See dealer.

Electrical System

Alternator Does Not Charge

1. Regulator not grounded. See dealer.

2. Engine ground wire loose or damaged. See dealer.
3. Loose or damaged wires in charging circuit. See dealer.

Alternator Charge Rate is Below Normal

1. Weak battery.
2. Excessive use of add-on accessories.
3. Loose or corroded connections.
4. Extensive periods of idling or low speed riding.

Transmission

Transmission Shifts Hard

1. Bent shifter rod. See dealer.

Transmission Jumps Out of Gear

1. Worn shifter dogs in transmission. See dealer.

Clutch Slips

1. Clutch controls improperly adjusted. See dealer.
2. Worn friction discs. See dealer.
3. Insufficient clutch spring tension. See dealer.

Clutch Drags or Does Not Release

1. Clutch controls improperly adjusted. See dealer.
2. Primary chaincase overfilled.
3. Clutch discs warped. See dealer.

Clutch Chatters

1. Friction discs or steel discs worn or warped. See dealer.

Brakes

ABS System Behavior

1. ABS lamp does not shut off above 3 mph 5 km/h . See dealer.
2. Other ABS symptoms. Refer to ABS Symptoms and Conditions.

Brakes Do Not Hold Normally

1. Master cylinder low on fluid. See dealer.
2. Brake line contains air bubbles. See dealer.
3. Master or wheel cylinder piston worn. See dealer.
4. Brake pads contaminated with grease or oil. See dealer.
5. Brake pads badly worn. See dealer.
6. Brake disc badly worn or warped. See dealer.
7. Brake fades because of heat build up. Excessive braking or brake pads dragging. See dealer.
8. Brake drags. Insufficient hand lever free play. See dealer.

Cooling System: Twin-Cooled Models

Overheats

1. Low coolant level.
2. Restricted radiator air flow.
3. Faulty thermostat. See dealer.
4. Coolant pump or fans inoperative. See dealer.
5. Vent hose crimped.

6. Air in coolant.

Handling

Irregularities

---

1. Improperly loaded motorcycle. Non-standard equipment such as heavy radio receivers, extra lighting equipment excess or unsecured luggage may cause unstable handling.
2. Load (people and gear) exceeds maximum GVWR.
3. Damaged tire(s) or improper front-rear tire combination.
4. Irregular or peaked front tire tread wear.
5. Incorrect tire pressure.
6. Shock absorber not functioning normally.
7. Incorrect suspension adjustment.
8. Loose wheel axle nuts. Tighten to recommended torque specification.
9. Excessive wheel hub bearing play.
10. Rear wheel out of alignment with frame and front wheel.
11. Steering head bearings improperly adjusted. Correct adjustment and replace pitted or worn bearings and races.
12. Loose spokes (laced wheel vehicles only).
13. Tire and wheel unbalanced.
14. Rims and tires out-of-round or eccentric with hub.
15. Rims and tires out-of-true sideways.
16. Rear fork pivot assembly: improperly tightened or assembled, or loose/pitted or damaged pivot bearings.
17. Engine mounts and/or stabilizer links loose, worn or damaged.
18. Incorrect, non-specified tire mounted on front or rear wheel.

Heated Hand Grips

---

1. Engine must be running. Start engine.
2. Turn ignition switch off then back on. Start engine and set hand grip heat.
3. Check the P&A fuse.
4. See dealer.

Accessories

Genuine Motor Parts and Accessories

Stop at your Harley-Davidson dealer to pick up a copy of the Genuine Motor Parts and Accessories catalog or go to *www.harley-davidson.com* to view thousands of Genuine Motor Accessories that are available for Harley-Davidson motorcycles.

The website includes the following tools and resources for accessorizing and personalizing your motorcycle.

Online Catalog

The full Genuine Motor Parts and Accessories catalog is available online in PDF format. The catalog includes hundreds of pages of Harley-Davidson accessories and maintenance products. For performance parts, check out the Screamin' Eagle Pro Racing Parts catalog.

NOTE:

Performance parts may not be available in some countries due to local restrictions on emissions. See your Harley-Davidson dealer for more information.

Shop for Your Bike

Browse through categories of accessories and options available specifically for your motorcycle. View product descriptions, pricing, fitment and online instruction sheets for many of the available products.

Customizer

Virtually redesign your motorcycle with parts and accessories using the Customizer. This tool allows you to experiment with different accessory and color combinations and shows how your motorcycle would look with the accessories installed. You can easily create a custom list of accessories to print out for your dealer.

Fit Shop

Learn how to customize your motorcycle to fit you personally. See how making changes to the suspension, seat, handlebars or foot controls can enhance the ergonomics and comfort of your motorcycle.

Custom Seats

Create a custom seat using selected designs, colors and textured materials. Custom seat specifications can be easily printed out for your dealer.

Custom Coverage

Add Accessories to Your New Motorcycle

NOTE:

Custom Coverage is not offered in some regions. See an authorized Harley-Davidson dealer to determine the parts and accessories warranty policies, terms and conditions in your area.

Harley-Davidson offers the Custom Coverage extended limited warranty for parts and accessories that are purchased and installed at an authorized Harley-Davidson dealer within 60 days after retail purchase of the motorcycle.

This limited warranty provides coverage for eligible *street legal* Genuine Harley-Davidson Motor Parts and Genuine Harley-Davidson Motor Accessories. This extended coverage on parts and accessories remains in effect for the remainder of the Harley-Davidson Motorcycle Limited Warranty for the vehicle. See Limited Motorcycle Warranty.

Purchases qualifying for Custom Coverage must be made at an authorized Harley-Davidson dealership within 60 days after retail purchase. Additional parts and accessories may be purchased and installed as often as desired within 60 days after retail purchase of the motorcycle.

Parts and accessories must be purchased and installed at an authorized Harley-Davidson dealership to qualify for Custom Coverage. Parts and accessories purchased via the internet are not eligible.

Warranties and Responsibilities

Warranty and Maintenance

This owner's manual contains your new motorcycle limited warranty and your owner's maintenance record.

It is your responsibility as the owner to follow the maintenance schedule at the mileage intervals as specified in the owner's manual. All of the specified maintenance services must be performed on schedule to keep your limited warranty valid.

Some countries, states or other locations may require all regular maintenance and service work to be done by an authorized Harley-Davidson dealer for your limited warranty to remain in effect. Check with your authorized Harley-Davidson dealer for local requirements.

1. Make an appointment with a Harley-Davidson dealer for inspection and service prior to the first 1000 miles 1600 kilometers , and as soon as possible after any issue arises.
2. Bring this owner's manual with you when you visit your authorized Harley-Davidson dealer to have your motorcycle inspected and serviced.
3. Have the dealer technician sign the maintenance record in the owner's manual at the proper mileage interval. These records should be retained by the owner as proof of proper maintenance.
4. Keep receipts covering any parts, service or maintenance performed.

These records should be transferred to each subsequent owner.

Use only Harley-Davidson approved parts and accessories that have been designed, tested and approved for your model and model year motorcycle.

Use of aftermarket performance parts may void all or parts of your limited warranty. See an authorized Harley-Davidson dealer for details.

Harley-Davidson authorized dealerships are independently owned and operated and may sell and install parts and accessories that are not manufactured or

approved by Harley-Davidson for use on your motorcycle. Therefore, you should understand that Harley-Davidson is not and cannot be responsible for the quality, suitability, or safety of any non-Harley-Davidson part, accessory or design modification, including labor, which may be sold and/or installed by authorized Harley-Davidson dealerships.

Keeping It All Harley-Davidson

Genuine Harley-Davidson parts are engineered and tested specifically for use on your motorcycle. Insist that your authorized Harley-Davidson dealer uses only genuine Harley-Davidson replacement parts and accessories to keep your Harley-Davidson motorcycle and its limited warranty intact. Not all Harley-Davidson parts and accessories are appropriate for your model or model year motorcycle.

CAUTION

It is possible to overload your vehicle's charging system by adding too many electrical accessories. If the combined electrical accessories operating at any one time consume more electrical current than the vehicle's charging system can produce, the electrical consumption can discharge the battery and cause damage to the vehicle's electrical system. See an authorized Harley-Davidson dealer for advice about the amount of current consumed by additional electrical accessories or for necessary wiring changes. (00211c)

NOTE:

Installing off-road or competition parts to enhance performance may void all or parts of your limited warranty. See the Harley-Davidson Motorcycle Limited Warranty in this owner's manual or an authorized Harley-Davidson dealer for details.

California and Select International Markets Evaporative Emission Controls: 2016 Models

All new 2016 Harley-Davidson motorcycles sold in the State of California and select international markets have an evaporative emission control system. This system is designed to meet CARB and local regulations in effect at the time of manufacture.

The system requires a small amount of maintenance. Periodically inspect system to verify that hoses are properly routed, not kinked or blocked and that all fittings are secure. Periodically check mounting hardware for tightness.

EPA Noise Regulations in the United States

EPA noise regulations require that the following statements be included in the Owner's Manual.

EPA Regulations

TAMPERING WITH NOISE CONTROL SYSTEM PROHIBITED: Federal law prohibits the following acts or the causing thereof: (1) The removal or rendering inoperative by any person other than for purposes of maintenance, repair, or replacement of any device or element of design incorporated into any new vehicle for the purpose of noise control prior to its sale or delivery to the ultimate purchaser or while it is in use, or (2) the use of the vehicle after such device or element of design has been removed or rendered inoperative by any person.

AMONG THOSE ACTS PRESUMED TO CONSTITUTE TAMPERING ARE THE FOLLOWING:

1. Replacing the muffler(s) and/or the entire exhaust system with parts not certified to be noise legal for street use.

2. Removing or modifying the muffler internal baffles in any way.
3. Replacing the air intake/cleaner assembly with one not certified to be noise legal for street use.
4. Modifying the air intake/cleaner assembly in such a way as to make the vehicle no longer noise legal for street use.

Harley-Davidson recommends that any and all noise related maintenance be done by an authorized Harley-Davidson dealer using genuine Harley-Davidson parts.

Warranty/Service Information

Any authorized Harley-Davidson dealer may provide warranty repair work on your motorcycle. The fact that an authorized Harley-Davidson dealership performs warranty repairs does not create an agency relationship between Harley-Davidson and the authorized dealership. If you have any questions regarding warranty obligations contact your authorized Harley-Davidson dealer.

For normal service work or warranty work under the above conditions, you may obtain the name and location of your nearest U.S. authorized Harley-Davidson dealer by calling 1-800-258-2464 (U.S. only). To find dealers worldwide, see www.harley-davidson.com.

Reporting Safety Defects in the United States

Safety defects must be reported to the National Highway Traffic Safety Administration (NHTSA) and Harley-Davidson.

NHTSA Statement

If you believe that your motorcycle has a defect which could cause a crash or could cause injury or death, you should immediately inform the National Highway Traffic Safety Administration (NHTSA) in addition to notifying Harley-Davidson.

If NHTSA receives similar complaints, it may open an investigation, and if it finds that a safety defect exists in a group of motorcycles, it may order a recall and remedy campaign. However, NHTSA cannot become involved in individual problems between you, your authorized Harley-Davidson dealer, or Harley-Davidson.

You can contact NHTSA through the following means. Additional information about motor vehicle safety is available through the website.

Telephone: Vehicle Safety Hotline (toll-free) at 1-888-327-4236 (TTY: 1-800-424-9153).

Website: www.safercar.gov

Address: Administrator, NHTSA, 400 Seventh Street SW, Washington, DC 20590

Required Documentation for Imported Motorcycles

If a Harley-Davidson motorcycle is imported into the United States, additional documentation is required for that motorcycle to be eligible for the United States Harley-Davidson Motorcycle Limited Warranty. An authorized Harley-Davidson dealer can provide a form explaining the requirements.

Owner Contact Information

If you move from your present address, sell your motorcycle, or purchase a pre-owned Harley-Davidson motorcycle, see an authorized Harley-Davidson dealer to update your owner contact information.

This will provide Harley-Davidson with an accurate registration (as required by law in some countries), and will allow Harley-Davidson to notify you in the event of a recall or product program.

The rights and benefits conferred upon you and the obligations of Harley-Davidson as set forth herein are separate and distinct from any rights and duties set forth in any service contract you may have purchased from a dealership and/or third-party insurance company. Harley-Davidson does not authorize any entity to expand Harley-Davidson's warranty obligations in connection with your motorcycle or this limited warranty.

When updating your contact information, your authorized Harley-Davidson dealer will need your Vehicle Identification Number (VIN), odometer mileage, and date of vehicle transfer (if applicable).

Questions and Concerns

If you have questions or concerns regarding the performance of your motorcycle or the application of the limited warranty described here, or are not satisfied with the service you are receiving from an authorized Harley-Davidson dealership, do the following:

1. Contact the selling and/or servicing dealership and speak to the sales and/or service manager.
2. If your concern cannot be addressed to your satisfaction by the dealership, contact the Harley-Davidson Customer Support Center by mailing your concern to the following address or calling the phone number below.

In the U.S., state warranty laws, often referred to as lemon laws, may provide you with certain rights not specifically mentioned here. To the extent allowed by your state, Harley-Davidson requests that you first send written notification of any defect or warranty non-conformity that you have experienced with your motorcycle to Harley-Davidson. Harley-Davidson appreciates the opportunity to investigate your concerns and restore your satisfaction in your motorcycle by making the necessary repairs consistent with the terms of Harley-Davidson's limited warranty. Harley-Davidson requests that you send your complaint to the Harley-Davidson Customer Support Center.

- Harley-Davidson Motor Company
- Attention: Harley-Davidson Customer Support Center
- P.O. Box 653
- Milwaukee, Wisconsin 53201
- 1-800-258-2464 (U.S. only)
- 1-414-343-4056

This warranty does not mean that each Harley-Davidson motorcycle is free from defects. Defects may be unintentionally introduced into motorcycles during the design and manufacturing processes and such defects could result in the need for repairs. For this reason, Harley-Davidson provides the Limited Warranty in order to remedy any such defects that result in a component malfunction or failure during the warranty period. The remedy under this written warranty, and any implied warranty, is limited to repair, replacement or adjustment of the defective part. This exclusive remedy shall not be deemed to have failed its essential purpose so long as Harley-Davidson, through its authorized dealers, is willing and able to repair, replace or adjust defective parts in the prescribed manner. Harley-Davidson's liability, if any, shall in no event exceed the cost of correcting any defect as herein provided and upon expiration of this warranty, any such liability shall terminate.

Limited Motorcycle Warranty

2016 Harley-Davidson Motorcycle Limited Warranty

---

24 Months/Unlimited Miles

Harley-Davidson warrants for any new 2016 Harley-Davidson motorcycle that an authorized Harley-Davidson dealer will repair or replace without charge any parts found under normal use to be defective in factory materials or workmanship. Such repair or replacement of defective parts will be Harley-Davidson's

sole obligation and your sole and exclusive remedy under this limited warranty. This limited warranty applies only for the duration identified below.

No person, including Harley-Davidson dealers, may modify, extend or waive any part of this warranty.

As a condition of this warranty, you are responsible for properly using, maintaining, and caring for your motorcycle as outlined in your Owner Manual. Harley-Davidson recommends that you maintain copies of all maintenance records and receipts.

THERE IS NO OTHER EXPRESS WARRANTY (OTHER THAN THE SEPARATE EMISSIONS, NOISE, AND RADIO LIMITED WARRANTIES) ON THE MOTORCYCLE. Any implied warranty of merchantability or fitness for particular purpose is limited to the duration of the express warranty, or to the duration set forth in your state's warranty statutes, whichever is shorter. Any implied warranty is not transferred to subsequent purchasers/buyers of the motorcycle.

The implied warranty of fitness for a particular purpose does not apply if your motorcycle is used for racing, even if the motorcycle is equipped for racing.

Some states do not allow limitations on how long an implied warranty lasts, so the above limitation may not apply to you.

TO THE FULLEST EXTENT ALLOWED BY LAW, NEITHER HARLEY-DAVIDSON NOR ITS AUTHORIZED DEALERS SHALL BE LIABLE FOR LOSS OF TIME, INCONVENIENCE, LOSS OF MOTORCYCLE USE, COMMERCIAL LOSS OR ANY OTHER INCIDENTAL OR CONSEQUENTIAL DAMAGES.

Harley-Davidson and your dealer are not responsible for any time or income that you lose, any inconvenience, the loss of your transportation or use of your motorcycle, the cost of a rental motorcycle, fuel, travel, meals, or lodging, or for any other incidental or consequential damages you may have.

Punitive, exemplary, or multiple damages may not be recovered unless applicable law prohibits their disclaimer. You may not bring any warranty-related claim as a class representative, a private attorney general, a member of a class of claimants or in any other representative capacity. Harley-Davidson shall not be liable for any damages caused by delay in delivery or furnishing of any products and/or services.

Some states do not allow the exclusion or limitation of incidental or consequential damages, so the above limitation or exclusion may not apply to you.

This warranty gives you specific legal rights, and you may also have other rights which vary from state to state.

The following terms and conditions apply to this limited warranty:

Duration

---

1. The duration of this limited warranty is twenty-four months, starting from the earlier of (a) the date of initial retail purchase and delivery of the motorcycle from an authorized Harley-Davidson dealer, or (b) the third anniversary of the last day of the model year of the motorcycle. Your authorized Harley-Davidson dealer will submit an electronic Sales and Warranty Registration form to initiate your limited warranty.

2. Any unexpired portion of this limited warranty will be transferred to subsequent owners, upon the resale of the motorcycle during the limited warranty period.

Owner's Obligations

To obtain warranty service, return your motorcycle at your expense within the limited warranty period to an authorized Harley-Davidson dealer. The authorized Harley-Davidson dealer should be able to provide warranty service during normal business hours, depending upon the workload of the authorized dealer's service department and the availability of necessary parts.

Exclusions

This limited warranty will not apply to any motorcycle.

1. Which has not been operated or maintained as specified in the owner's manual.

2. Which has been abused, neglected, misused, improperly stored, used "off the highway," or used for racing or competition of any kind.
3. Which is not manufactured to comply with the laws of the market in which it is registered.
4. Which has off-road or competition parts installed to enhance performance, a trailer hitch, or has other unapproved modifications (even if these modifications include genuine Harley-Davidson parts and accessories that are not approved for use on your motorcycle). These modifications may void all or parts of your new motorcycle limited warranty. See an authorized Harley-Davidson dealer for details.
5. Which has been subjected to an act of God, war, riot, insurrection, nuclear contamination, natural disasters, including, but not limited to, lightning, forest fires, dust storms, hail storms, ice storms, earthquakes, or floods, or other circumstances out of Harley-Davidson's control.
6. Which has been in an accident or collision or has been dropped or struck.

Other Limitations

This limited warranty does not cover:

1. Parts and labor for normal maintenance as recommended in the owner's manual, or the replacement of parts due to normal wear and tear including, but not limited to, the following: tires, lubrication, oil and filter change, fuel system cleaning, battery maintenance, engine tune-up, spark plugs, brake, clutch, chain/belt adjustment and chain replacement.
2. Cosmetic concerns that arise as a result of owner abuse, lack of proper maintenance or environmental conditions (except concerns that result from defects in factory materials or workmanship, which are covered by this limited warranty for the duration of the limited warranty period).
3. Any cosmetic condition existing at the time of retail delivery that has not been documented by the authorized Harley-Davidson selling dealer prior to retail delivery.
4. Defects or damage to the motorcycle caused by alterations outside of Harley-Davidson's factory specifications or caused by alterations or use of parts or accessories not approved for the make and model year of your motorcycle.
5. Damage caused by installation or use of non-Harley-Davidson components, even those installed by an authorized Harley-Davidson dealership, that cause a Harley-Davidson part to fail. Examples include, but are not limited to performance-enhancing powertrain components or software, exhaust systems, trailer hitches, non-approved tires, lowering kits, handlebars, and add-ons connected to the factory electrical system.

Important: Read Carefully

---

1. Authorized Harley-Davidson dealers are independently owned and operated and may sell non-Harley-Davidson products. Because of this, HARLEY-DAVIDSON IS NOT RESPONSIBLE FOR THE SAFETY, QUALITY, OR SUITABILITY OF ANY NON-HARLEY-DAVIDSON PART, ACCESSORY OR DESIGN MODIFICATION INCLUDING, BUT NOT LIMITED TO, LABOR WHICH MAY BE SOLD AND/OR INSTALLED BY AUTHORIZED HARLEY-DAVIDSON DEALERS.
2. This limited warranty is a contract between you and Harley-Davidson. It is separate and apart from any warranty you may receive or purchase from an authorized Harley-Davidson dealer. An authorized Harley-Davidson dealer is not authorized to alter, modify, expand, or in any way change the terms and conditions of this limited warranty.
3. Any warranty work or parts replacement authorized by Harley-Davidson will not preclude Harley-Davidson from later relying on any exclusion where applicable.
4. Harley-Davidson and its authorized dealers reserve the right to modify or service motorcycles designed and manufactured by Harley-Davidson at any time without incurring any additional obligation to make the same alteration or change to a motorcycle previously built and sold. Harley-Davidson reserves the right to provide post-warranty repairs, conduct repair campaigns, offer good-will or customer satisfaction repairs or extend the warranty coverage for certain motorcycles at its sole discretion. Said repairs or extensions of warranty coverage in no way obligates Harley-Davidson to provide similar accommodations to other owners of similar motorcycles. Sometimes Harley-Davidson may offer a special adjustment program to pay all or part of the cost of certain repairs beyond the terms of your limited warranty. Check with your authorized Harley-Davidson dealer to learn whether such programs are available to you. Your state may prohibit these types of offers, in which case, they may not be available

to you.

5. The fact that a part is labeled or branded Harley-Davidson does not necessarily make it appropriate or warranted for the make and model of your motorcycle. The use of parts not designed and tested for your motorcycle may have negative consequences on the performance of your motorcycle and may create conditions not covered by this limited warranty.

Limited Motorcycle Warranty (Australia)

2016 Australia/New Zealand Harley-Davidson Motorcycle Manufacturer's Limited Warranty

---

24 Months/Unlimited Miles

This motorcycle limited warranty, referred to below as the "H-D Motorcycle Warranty" applies to all persons who purchase a new 2016 or prior-model Harley-Davidson motorcycle in Australia and New Zealand only after 1st January 2016.

Your Consumer Rights

The benefits given to you under this H-D Motorcycle Warranty are additional to, and do not detract from, other rights and remedies that you may have in respect of the motorcycle under Australian and New Zealand laws, including consumer protection laws.

In Australia, our goods come with guarantees that cannot be excluded under the Australian Consumer Law. You are entitled to a replacement or refund for a major failure and compensation for any other reasonably foreseeable loss or damage. You are also entitled to have the goods repaired or replaced if the goods fail to be of acceptable quality and the failure does not amount to a major failure.

In New Zealand, our goods also come with guarantees that cannot be excluded under the New Zealand Consumer Guarantees Act.

Warranty

This H-D Motorcycle Warranty, is provided by **Harley-Davidson, Motor Company**, P.O. Box 653, Milwaukee, Wisconsin 53201, U.S.A, phone: +1 (414) 343-4056, ("Harley-Davidson").

Harley-Davidson warrants for any new 2016 Harley-Davidson motorcycle that an authorised Harley-Davidson dealer will repair or replace without charge any parts found to be defective in factory materials or workmanship under normal use during the warranty period set out below.

Such repair or replacement of parts will be Harley-Davidson's sole obligation and your sole remedy under this H-D Motorcycle Warranty, however you may have other rights under Australian and New Zealand laws, as described above.

Note: Goods presented for repair may be replaced by refurbished goods of the same type rather than being repaired. Refurbished parts may be used to repair goods.

The following terms and conditions apply to this H-D Motorcycle Warranty:

Warranty Period

The duration of this H-D Motorcycle Warranty is twenty-four months, starting from the earlier of:

(a) the date of delivery by an authorised Harley-Davidson dealer to the first retail purchaser; or

(b) the third anniversary of the last day of the model year of the motorcycle (if not sold to a retail purchaser before that date).

Your authorised Harley-Davidson dealer will submit an electronic Sales and Warranty Registration form to initiate your H-D Motorcycle Warranty.

Note: If the motorcycle was used as a demonstrator or company motorcycle, then the warranty period may have started and/or expired prior to the initial retail sale. See an authorised Harley-Davidson dealer for details.

Any unexpired portion of this H-D Motorcycle Warranty will be transferred to subsequent owners, upon the resale of the motorcycle during the warranty period. See the OWNER CONTACT INFORMATION section of the Owner's Manual for information regarding notification of ownership changes.

Obtaining Warranty Service

To obtain warranty service, return your motorcycle at your expense within the warranty period to an authorised dealer. Harley-Davidson's network of authorised dealers is large, and continues to expand. To find current contact information for your nearest authorised dealer, visit our website at www.h-d.com.au.

The authorised Harley-Davidson dealer should be able to provide warranty service during normal business hours and as soon as possible, depending upon the workload of the authorised dealer's service department and the availability of necessary parts

You are responsible for collecting the motorcycle from the authorized dealer once the warranty service has been completed, at your expense.

Exclusions

This H-D Motorcycle Warranty will not apply to any motorcycle (or part or accessory):

1. Which has not been operated or maintained as specified in the Owner's Manual.
2. Which has been abused, neglected, misused, improperly stored, used "off the highway," or used for racing or competition of any kind.
3. Which was not originally manufactured for use or sold in Australia and New Zealand and/or does not comply with Australian and New Zealand homologation requirements.
4. Which has off-road or competition parts installed to enhance performance, or has unapproved modifications. These modifications may void all or part of your new H-D Motorcycle Warranty. See an authorised Harley-Davidson dealer for details.
5. Where damage is caused by, or Harley-Davidson is unable to honour this H-D Motorcycle Warranty due to, acts of God, war, riot, insurrection, natural disasters, including, but not limited to, nuclear contamination, lightning, forest fires, dust storms, hail storms, ice storms, earthquakes, floods, or other circumstances out of Harley-Davidson's control.
6. Which has been in an accident, collision, dropped or struck.

Note: Even though this H-D Motorcycle Warranty does not apply in the circumstances set out above, you may still have rights under Australian and New Zealand laws, including the Australian Consumer Law in such circumstances.

Other Limitations

This H-D Motorcycle Warranty does not cover:

1. Parts and accessories not manufactured by Harley-Davidson, or any damage caused to the motorcycle by the installation of such parts and accessories, even if such parts and accessories are installed on the motorcycle at the date of initial retail purchase. A separate third party warranty may apply to such parts and accessories. See an authorised Harley-Davidson dealer for details.

2. Parts and labour for normal maintenance as recommended in the Owner's Manual, or the replacement of parts due to normal wear and tear including, but not limited to, the following: tyres, lubrication, oil and filter change, fuel system cleaning, battery maintenance, engine tune-up, spark plugs, brake, clutch, chain/belt adjustment and chain replacement.

3. Cosmetic or other concerns that arise as a result of owner abuse, lack of proper maintenance or environmental conditions (except concerns that result from defects in factory materials or workmanship, which are covered by this H-D Motorcycle Warranty for the duration of the warranty period).

4. Any cosmetic condition existing at the time of retail delivery that has not been documented by the authorised Harley-Davidson selling dealer prior to retail delivery.

5. Defects or damage to the motorcycle caused by alterations outside of Harley-Davidson's factory specifications, including the installation of competition or closed course parts and accessories and the addition of loads and stresses to the motorcycle above those recommended by Harley-Davidson.

6. Damage caused by installation or use of non-Harley-Davidson components, even those installed by an authorised dealership, that cause a Harley-Davidson part to fail. Examples include, but are not limited to performance-enhancing powertrain components or software, exhaust systems, non-approved tyres, lowering kits, handlebars, add-ons connected to the factory electrical system, tow bars, etc.

Note: Even though this H-D Motorcycle Warranty does not cover the circumstances set out above, you may still have rights under Australian and New Zealand laws, including the Australian Consumer Law.

Important: Read Carefully

1. Authorised Harley-Davidson dealers are independently owned and operated and may sell non-Harley-Davidson products. Because of this, HARLEY-DAVIDSON IS NOT RESPONSIBLE FOR THE SAFETY, QUALITY, OR SUITABILITY OF ANY NON-HARLEY-DAVIDSON PART, ACCESSORY OR DESIGN MODIFICATION WHICH MAY BE SOLD AND/OR INSTALLED BY AUTHORISED HARLEY-DAVIDSON DEALERS OR LABOUR CARRIED OUT BY DEALERS.

2. This H-D Motorcycle Warranty is a contract between you and Harley-Davidson. It is separate and apart from any warranty you may receive or purchase from an authorised Harley-Davidson dealer. An authorised Harley-Davidson dealer is not authorised to alter, modify, or in any way change the terms and conditions of this H-D Motorcycle Warranty.

Any warranty work or parts replacement authorised by Harley-Davidson will not preclude Harley-Davidson from later relying on any exclusion where Harley-Davidson later becomes aware that an exclusion applied or the warranty claim did not otherwise comply with the terms of this H-D Motorcycle Warranty.

Limited Noise Warranty

2016 Harley-Davidson Motorcycle Noise Control System Limited Warranty

The following limited warranty applies to the noise control system, is in addition to the MOTORCYCLE LIMITED WARRANTY and EMISSION CONTROL SYSTEM LIMITED WARRANTY, and applies only to Harley-Davidson motorcycles sold in the U.S.

Harley-Davidson warrants to the first owner and each subsequent owner that this motorcycle is designed and built so as to conform at the time of sale with applicable regulations of the U.S. Environmental Protection Agency (as tested following F-76 Drive-By test procedure) and that it is free from defects in factory materials and workmanship which can cause this motorcycle not to meet U.S. Environmental Protection Agency Standards within one (1) year from initial retail purchase and delivery from an authorized Harley-Davidson dealer or one (1) year from the [second] anniversary of the last day of the model year of the motorcycle, or 3,730 miles 6,000 kilometers whichever occurs first. Any unexpired portion of this limited warranty will be transferred to subsequent owners, upon the resale of the motorcycle during the limited warranty period. If the motorcycle was used as a demonstrator or company motorcycle, then the limited warranty period may have started and/or expired prior to the initial retail sale. See an authorized Harley-Davidson dealer for details.

THERE IS NO OTHER EXPRESS WARRANTY (OTHER THAN THE SEPARATE MOTORCYCLE AND EMISSIONS LIMITED WARRANTIES) ON THE MOTORCYCLE. ANY IMPLIED WARRANTY OF MERCHANTABILITY OR FITNESS FOR PARTICULAR PURPOSE IS LIMITED TO THE DURATION OF THIS LIMITED WARRANTY.

Some states do not allow limitations on how long an implied warranty lasts, so the above limitation may not apply to you.

The limited warranty period shall begin on the date the motorcycle is delivered to the first retail purchaser or, if the motorcycle is placed in service as a demonstrator or company motorcycle prior to sale at retail, on the date it is first placed in service.

THE FOLLOWING ITEMS ARE NOT COVERED BY THE NOISE CONTROL SYSTEM LIMITED WARRANTY

1. Failures which arise as a result of misuse, alteration, or non-performance of maintenance as specified in the Owner's Manual.
2. Replacing, removing, or modifying any portion of the NOISE CONTROL SYSTEM (consisting of the exhaust system and air intake/cleaner assembly) with parts not certified to be noise legal for street use.
3. Any motorcycle on which the odometer mileage has been changed so that the mileage cannot be determined.
4. TO THE FULLEST EXTENT ALLOWED BY LAW, NEITHER HARLEY-DAVIDSON NOR ITS AUTHORIZED DEALERS SHALL BE LIABLE FOR LOSS OF TIME, INCONVENIENCE, LOSS OF MOTORCYCLE USE, COMMERCIAL LOSS OR OTHER INCIDENTAL OR CONSEQUENTIAL DAMAGES.

Some states do not allow the exclusion or limitation of incidental or consequential damages, so the above limitation or exclusion may not apply to you.

Other Rights

This limited warranty gives you specific legal rights, and you may have other rights which vary from state to state.

Recommendations for Required Maintenance

It is recommended that any noise system maintenance be performed by an authorized Harley-Davidson dealer using genuine Harley-Davidson replacement parts. The maintenance, replacement or repair of the noise control system may be performed by any other qualified service outlet or individual. Non-genuine Harley-Davidson parts may be used only if such parts are certified to comply with U.S. Environmental Protection Agency Standards.

Limited Emission Warranty

2016 Harley-Davidson Emission Control System Limited Warranty

---

The following limited warranty applies to the emission control system, is in addition to the MOTORCYCLE LIMITED WARRANTY and NOISE CONTROL SYSTEM LIMITED WARRANTY, and applies only to Harley-Davidson motorcycles certified for sale, registered, and normally operated in the U.S. Refer to the CALIFORNIA EMISSIONS CONTROL WARRANTY STATEMENT for additional warranty provisions applicable to California motorcycles.

Harley-Davidson Motor Company warrants to the first owner and each subsequent owner that this vehicle is designed, built, and equipped so as to conform at the time of sale with applicable regulations under section 7521 of Title 42 of the United States Code, and that it is free from defects in materials and workmanship which would cause this motorcycle to fail to conform with applicable regulations for five (5) years from the initial retail purchase and delivery from an authorized Harley-Davidson dealer (or five (5) years from the date the motorcycle is first placed in service, if it is first placed in service as a "demonstrator" or "company" motorcycle prior to delivery), or 18,641 miles 30,000 kilometers , whichever occurs first. Any unexpired portion of this limited warranty will be transferred to subsequent owners, upon the resale of the motorcycle during the warranty period.

THERE IS NO OTHER EXPRESS WARRANTY (OTHER THAN THE SEPARATE MOTORCYCLE AND NOISE LIMITED WARRANTIES) ON THE MOTORCYCLE. ANY IMPLIED WARRANTY OF MERCHANTABILITY OR FITNESS FOR PARTICULAR PURPOSE IS LIMITED TO THE DURATION OF THIS WARRANTY.

Some states do not allow limitations on how long an implied warranty lasts, so the above limitation may not apply to you.

The limited warranty period shall begin on the date the motorcycle is delivered to the first retail purchaser or, if the motorcycle is placed in service as a demonstrator or company motorcycle prior to sale at retail, on the date it is first placed in service.

THE FOLLOWING ITEMS ARE NOT COVERED BY THE EMISSION CONTROL SYSTEM LIMITED WARRANTY

1. Failures which arise as a result of misuse, tampering, alterations, accident, acts of nature, or improper or inadequate maintenance as specified in the Owner's Manual.

2. Required maintenance services (as specified in the Owner's Manual) and the replacement of parts (such as spark plugs, fuel and oil filters, etc.) used in required maintenance.

3. Any motorcycle on which the odometer mileage has been changed so that the mileage cannot be determined.

4. TO THE FULLEST EXTENT ALLOWED BY LAW, NEITHER HARLEY-DAVIDSON NOR ITS AUTHORIZED DEALERS SHALL BE LIABLE FOR LOSS OF TIME, INCONVENIENCE, TOWING OF THE VEHICLE, LOSS OF MOTORCYCLE USE, COMMERCIAL LOSS OR OTHER INCIDENTAL OR CONSEQUENTIAL DAMAGES.

Some states do not allow the exclusion or limitation of incidental or consequential damages, so the above limitation or exclusion may not apply to you.

Items Covered by this Emission Warranty

The emission control system warranty may cover the following parts if the defect is deemed to be emissions-related:

- Air cleaner assembly
- Cam shaft
- Spark plug
- Ignition coil
- Ignition wires
- Vapor valve
- Catalytic converter
- Crankcase breather
- MAP sensor
- TMAP sensor
- Intake air temperature sensor
- Throttle position sensor
- Fuel injectors
- Induction module or throttle body
- Engine temperature sensor
- Electronic control unit
- Regulator/fuel pump (for leaks and/or high and low-pressure failures)
- Fuel filter
- Oxygen sensors

Fuel Tank (non-cosmetic failures only)

- Leaks
- Fuel vapor separator
- Fuel cap

If used on the above: hoses, clamps, fittings, tubing, sealing gaskets and mounting hardware.

Detailed instructions for proper maintenance and use of this motorcycle, including the time and/or mileage intervals at which such maintenance is to be performed, may be found in this Owner's Manual under Service Records.

Other Rights

This limited warranty gives you specific legal rights, and you may have other rights which vary from state to state.

Recommendations for Required Maintenance

It is recommended that any emission system maintenance be performed by an authorized Harley-Davidson dealer using genuine Harley-Davidson replacement parts. However the maintenance, replacement or repair of the emissions control system may be performed by any other qualified service outlet or individual. Non-genuine Harley-Davidson parts may be used only if such parts are certified to comply with U.S. Environmental Protection Agency Standards.

California Emissions Control Warranty

California Emissions Control Warranty Statement

Your Warranty Rights and Obligations

The California Air Resources Board and Harley-Davidson Motor Company are pleased to explain the emission control system warranty on your 2016 model year motorcycle. In California, new motor vehicles must be designed, built and equipped to meet the State's stringent anti-smog standards. Harley-Davidson Motor Company must warrant the emission control system on your motorcycle for the periods of time listed below provided there has been no abuse, unapproved modification, neglect or improper maintenance of your motorcycle.

Your emission control system may include parts such as the carburetor or fuel-injection system, the ignition system, catalytic converter, and engine computer. Also included may be hoses, connectors and other emission-related assemblies.

Where a warrantable condition exists, within the warranty period noted below, your authorized Harley-Davidson dealer will repair your motorcycle at no cost to you including diagnosis, parts and labor.

Manufacturer's Warranty Coverage

For a period of use of five years or 18,641 miles 30,000 kilometers , whichever first occurs, beginning on the date the motorcycle is delivered to the ultimate purchaser or, if the motorcycle is placed in service as a demonstrator or company motorcycle prior to sale at retail, the date it is first placed in service.

If any emission related part on your motorcycle is defective, the part will be repaired or replaced by Harley-Davidson Motor Company. This is your emission control system DEFECTS WARRANTY.

Owner's Warranty Responsibilities

As the motorcycle owner, you are responsible for the performance of the required maintenance listed in your Owner's Manual. Harley-Davidson recommends that you retain all receipts covering maintenance on your motorcycle, but Harley-Davidson cannot deny emissions warranty coverage solely for the lack of receipts or for your failure to ensure the performance of all scheduled maintenance.

You are responsible for presenting your motorcycle to an authorized Harley-Davidson dealer as soon as a problem exists. The warranty repairs should be completed in a reasonable amount of time, not to exceed 30 days.

As the motorcycle owner, you should also be aware that Harley-Davidson may deny you warranty coverage if your motorcycle or a part has failed due to abuse, neglect, improper maintenance or unapproved modifications.

If you have any questions regarding your warranty rights and responsibilities, you should contact Harley-Davidson Customer Service Department at 1-800-258-2464 (U.S. only) or 1-414-343-4056, or the California Air Resources Board at 9528 Telstar Ave., El Monte, California 91731.

Additional Warranty Terms

The warranty period starts the date the motorcycle is delivered to the ultimate purchaser or, if the motorcycle is placed in service as a demonstrator or company motorcycle prior to sale at retail, the date it is first placed in service.

The emission control system of each new Harley-Davidson motorcycle was designed, built and tested using only Genuine Harley-Davidson parts and with these parts the motorcycle is certified as being in conformity with California emission control regulations.

We recommend that you take your motorcycle to an authorized Harley-Davidson dealer for repairs under this warranty. The dealer has factory-trained mechanics and genuine Harley-Davidson parts. However, in the case of an "emergency" (as defined below), you could have repairs performed at any available service establishment or by the owner, using any replacement part. An authorized Harley-Davidson dealer not being reasonably available, or a part not being available within a reasonable time period (not to exceed 30 days from the time the motorcycle is initially presented to a Harley-Davidson dealer for repair) constitutes an emergency. Harley-Davidson will reimburse the owner for such repairs, including diagnosis, only if it is established that the repairs are covered under this emission warranty. Harley-Davidson's parts reimbursement, however, will not exceed our suggested retail price for all warranted parts replaced and our labor reimbursement will be limited to our recommended time allowances for emission system repairs at the geographically appropriate hourly labor rate.

To obtain reimbursement from Harley-Davidson for such emergency repairs, you must keep all failed parts and original receipts, so you can present them to an authorized Harley-Davidson dealer for inspection. Harley-Davidson recommends that you bring your motorcycle to an authorized dealer for inspection to ensure that the emergency repairs were done properly.

Remember: Use of non-Harley-Davidson replacement parts may impair the effectiveness of the emission control system or otherwise damage your motorcycle. If other than genuine Harley-Davidson parts are used for maintenance, replacement or repair of components affecting emission control, you should obtain written assurances that such non-Harley-Davidson parts are warranted by their manufacturer to be equal in quality to Genuine Harley-Davidson parts in both performance and durability. The use of non-Harley-Davidson replacement parts does not invalidate the existing warranty, if any, on other Harley-Davidson components unless the non-Harley-Davidson parts cause damage to warranted parts or result in the creation of an emissions non-compliant motorcycle. However, HARLEY-DAVIDSON ASSUMES NO LIABILITY UNDER THIS WARRANTY WITH RESPECT TO ANY PARTS WHICH ARE NOT GENUINE HARLEY-DAVIDSON PARTS, unless Harley-Davidson parts cause damage to non-genuine Harley-Davidson parts.

What Is Covered by this Emission Warranty

The emission control system warranty covers the following "warranted parts" only:

- Air cleaner assembly
- Cam shaft
- Spark plug
- Ignition coil
- Ignition wires
- Vapor valve
- Catalytic converter
- Crankcase breather
- MAP sensor
- TMAP sensor
- Intake air temperature sensor
- Throttle position sensor
- Fuel injectors
- Induction module or throttle body
- Engine temperature sensor
- Electronic control unit
- Regulator/fuel pump (for leaks and/or high and low pressure failures)
- Fuel filter
- Oxygen sensors
- Carbon canister
- Purge control valve

Fuel Tank (non-cosmetic failures only)

- Leaks
- Fuel vapor separator
- Fuel cap

If used on the above: hoses, clamps, fittings, tubing, sealing gaskets and mounting hardware.

What Is Not Covered by this Emission Warranty

The emission control system warranty does not cover:

Malfunctions in any "warranted parts" caused by any of the following: abuse, misuse, unapproved modification or alteration, tampering, disconnection, or improper or inadequate maintenance. The warranty also does not cover replacement of listed parts in the event that the vehicle has been rendered emissions non-compliant in the state of California through actions noted above.

Damage resulting from accident, acts of nature or other events beyond the control of Harley-Davidson.

The repair or replacement of "warranted parts" which are scheduled for replacement prior to 18,641 mi 30,000 km , once these parts have been replaced at the first replacement interval as part of required maintenance services.

Repairs and services performed by anyone other than an authorized Harley-Davidson Dealer (except in case of emergency as defined above).

Loss of time, inconvenience, loss of use of the motorcycle, towing of the vehicle, or commercial loss and/or consequential damages.

Repairs on any motorcycle of which odometer mileage has been changed so that mileage cannot be readily determined.

Limited Radio Warranty

2016 Limited Radio Warranty

Harley-Davidson warrants that your Harley-Davidson radio will be free from factory defects in factory materials and workmanship, under normal use and service, for a period of twenty-four (24) months starting from the earlier of (a) the date of initial retail purchase of the motorcycle on which the radio is installed, or (b) the third anniversary of the last day of the model year of the motorcycle on which the radio is installed. Any unexpired portion of this limited warranty will be transferred to subsequent owner(s), upon the resale of the motorcycle during the limited warranty period. If the motorcycle was used as a demonstrator or company motorcycle, then the limited warranty period may have started and/or expired prior to the initial retail sale. See an authorized Harley-Davidson Dealer for details.

This limited warranty does not cover defects or damage due to abuse, misuse or improper installation, or any radio on a motorcycle which has been registered with Harley-Davidson as a collector's vehicle. Radios with a touchscreen have a replaceable protective film. Damage to the radio due to use without this screen protector is not covered under warranty. The screen protector itself is a serviceable wear part which can be purchased at an authorized Harley-Davidson dealer. Wear or subsequent damage to the screen protector is not covered under warranty. Also, the limited warranty does not cover syncing issues or an improper functioning radio caused by an incompatible phone or other media storage device (MP3, jump drive, etc.). See an authorized Harley-Davidson dealer for details. Use of aftermarket parts may void all or parts of your limited warranty.

This limited warranty does not cover repairs under certain conditions. Examples include:

- Loss of personal media, software or data.
- Failure to provide proper installation environment.
- Damage caused by abnormal use, unauthorized modification, computer viruses, or installation of unauthorized software, peripherals and attachments; unauthorized, unapproved or incompatible devices or upgrades; or malfunction of a mobile phone or digital media device, including inadequate signal reception by the external antenna, viruses or other software problems.

To obtain warranty service, return your motorcycle with sound system intact, at your expense, within the limited warranty period to an authorized Harley-Davidson dealer. Authorized Harley-Davidson dealers should be able to provide warranty service during normal business hours depending upon the workload of the authorized dealer's service department and the availability of necessary parts.

The remedy for breach of this warranty is expressly limited to the repair or replacement **(which may include a refurbished replacement radio)**, without charge for parts and labor, of any part that proves to be defective, AND DOES NOT EXTEND TO LIABILITY FOR CONSEQUENTIAL DAMAGES, COSTS OR EXPENSES, INCLUDING LOSS OF TIME, INCONVENIENCE, COMMERCIAL LOSS, OR LOSS OF USE OF THE VEHICLE, RESULTING FROM ANY PART THAT PROVES TO BE DEFECTIVE.

THERE IS NO OTHER EXPRESS WARRANTY ON THE RADIO. ANY IMPLIED WARRANTY RELATING TO THIS RADIO, INCLUDING WARRANTIES OF MERCHANTABILITY OR FITNESS FOR A PARTICULAR PURPOSE, IS EXPRESSLY LIMITED TO THE DURATION OF THIS LIMITED WARRANTY.

TO THE FULLEST EXTENT ALLOWED BY LAW, HARLEY-DAVIDSON AND ITS AUTHORIZED DEALERS SHALL NOT BE LIABLE FOR LOSS OF TIME, INCONVENIENCE, LOSS OF MOTORCYCLE USE, COMMERCIAL LOSS OR ANY OTHER INCIDENTAL OR CONSEQUENTIAL DAMAGES.

Some states do not allow the exclusion or limitation of incidental or consequential damages, so the above limitation or exclusion may not apply to you.

Other Rights

This warranty gives you specific legal rights, and you may also have other rights which vary from state to state.

Limited Radio Warranty (Australia)

2016 Australia/New Zealand Limited Radio Warranty

Your Consumer Rights

The benefits given to you under this H-D Radio Warranty are additional to, and do not detract from, other rights and remedies that you may have in respect of the radio or its installation under Australian and New Zealand laws, including consumer protection laws.

In Australia, our goods come with guarantees that cannot be excluded under the Australian Consumer Law. You are entitled to a replacement or refund for a major failure and compensation for any other reasonably foreseeable loss or damage. You are also entitled to have the goods repaired or replaced if the goods fail to be of acceptable quality and the failure does not amount to a major failure.

In New Zealand, our goods also come with guarantees that cannot be excluded under the New Zealand Consumer Guarantees Act.

Warranty

This warranty is provided by Harley-Davidson Motor Company P.O. Box 653, Milwaukee, Wisconsin 53201, U.S.A, phone: +1 (414 343-4056) ("Harley-Davidson").

Harley-Davidson warrants that an authorised Harley-Davidson dealer will repair or replace your Harley-Davidson radio if it is found to be defective in factory materials or workmanship, under normal use and service, during the warranty period set out below.

Such repair or replacement will be Harley-Davidson's sole obligation and your sole remedy under this H-D Radio Warranty, however you may have other rights under Australian and New Zealand laws, as described above.

Note that goods presented for repair may be replaced by refurbished goods of the same type rather than being repaired. Refurbished parts may be used to repair goods.

Warranty Period

The warranty period is a period of twenty-four (24) months starting from the earlier of:

(a) the date of delivery of the motorcycle on which the radio is installed by an authorised Harley-Davidson dealer to the first retail purchaser; or

(b) the third anniversary of the last day of the model year of the motorcycle on which the radio is installed (if not sold to a retail purchaser before that date).

Any unexpired portion of this H-D Radio Warranty will be transferred to subsequent owners, upon the resale of the motorcycle during the limited warranty period. See the OWNER CONTACT INFORMATION section of this Owner's Manual for information regarding notification of ownership changes.

Note: If the motorcycle was used as a demonstrator or company motorcycle, then the warranty period may have started and/or expired prior to the initial retail sale. See an authorised Harley-Davidson dealer for details.

Exclusions

This H-D Radio Warranty does not cover defects or damage due to abuse, misuse or improper installation, or any radio on a motorcycle which has been registered with Harley-Davidson as a collector's vehicle. Radios with a touchscreen have a replaceable protective film. Damage to the radio due to use without this screen protector is not covered under warranty. The screen protector itself is a serviceable wear part which can be purchased at an authorized Harley-Davidson dealer. Wear or subsequent damage to the screen protector is not covered under warranty. Also, the limited warranty does not cover syncing issues or an improper functioning radio caused by an incompatible phone or other media storage device (MP3, jump drive, etc.). See an authorised Harley-Davidson dealer for details.

Obtaining Warranty Service

To obtain warranty service, return your motorcycle with sound system intact, at your expense, within the warranty period to an authorised Harley-Davidson dealer.

Harley-Davidson's network of authorised dealers is large, and continues to expand. To find current contact information for your nearest authorised dealer, visit our website at www.h-d.com.au.

Maintenance Scheduling

Service Records

Regular Service Intervals

⚠WARNING

Perform the service and maintenance operations as indicated in the regular service interval table. Lack of regular maintenance at the recommended intervals can affect the safe operation of your motorcycle, which could result in death or serious injury. (00010a)

⚠WARNING

If you operate your motorcycle under adverse conditions (severe cold, extreme heat, very dusty environment, very bad roads, through standing water, etc.), you should perform the regular maintenance intervals more frequently to ensure the safe operation of your motorcycle. Failure to maintain your motorcycle could result in death or serious injury. (00094a)

Regular maintenance must be performed at specified intervals to help keep your new Harley-Davidson motorcycle operating at peak performance and keep your new motorcycle limited warranty in force. Your authorized Harley-Davidson dealer knows best how to service your motorcycle with factory approved methods and equipment assuring you of thorough and competent workmanship.

Some maintenance items are scheduled at least once per year, even if the next mileage interval has not been reached. In severe riding conditions, some maintenance items need to be performed more frequently. Refer to Regular Service Intervals: 2016 Harley-Davidson Touring Models.

NOTES:

- *The use of parts and service procedures other than Harley-Davidson approved parts and service procedures may void the limited warranty. Any alterations to the emission system components, such as the intake and exhaust system, may be in violation of motor vehicle laws.*
- *Some countries, such as Brazil, may require all regular maintenance to be performed by an authorized Harley-Davidson dealer for your limited warranty to remain in effect. Check with your authorized Harley-Davidson dealer.*
- *Some countries, such as Brazil, require additional annual (or semi-annual) regular maintenance steps to keep your limited warranty in effect and/or comply with vehicle regulations. Check with your authorized Harley-Davidson dealer and the motorcycle regulations in your country for local requirements.*
- *After completing the final service interval, repeat the service schedule starting at the 5000 mi 8000 km interval. Refer to Regular Service Intervals: 2016 Harley-Davidson Touring Models.*

- *Whenever a vehicle is in for maintenance, always check for and complete open recalls and product programs.*
- *Whenever a vehicle is in for maintenance, always verify that the latest calibration is installed.*

Regular Service Intervals: 2016 Harley-Davidson Touring Models

ITEM SERVICED	1000 mi 1600 km	5000 mi 8000 km	10000 mi 16000 km	15000 mi 24000 km	20000 mi 32000 km	25000 mi 40000 km	30000 mi 48000 km	35000 mi 56000 km	40000 mi 64000 km	45000 mi 72000 km	50000 mi 80000 km	NOTES
Check operation of electrical equipment and switches	X	X	X	X	X	X	X	X	X	X	X	
Check front tire pressure, inspect tread	X	X	X	X	X	X	X	X	X	X	X	1
Check front wheel spoke tightness (if equipped)	X	X			X			X			X	2, 3, 4
Inspect front brake fluid sight glass	X	X	X	X	X	X	X	X	X	X	X	5, 6
Inspect clutch fluid sight glass (hydraulic operated)	X	X	X	X	X	X	X	X	X	X	X	5, 7
Check front brake and hydraulic clutch reservoir cover screw torque	X		X		X		X		X		X	1, 2, 8
Check hand control fastener switch housing screw torque	X		X		X		X		X		X	1, 2, 8
Check clutch lever handlebar clamp screw torque	X		X		X		X		X		X	1, 2, 8
Check master cylinder handlebar clamp screw torque	X		X		X		X		X		X	1, 2, 8
Inspect, lubricate and adjust steering head bearings						X					X	2, 9
Inspect windshield bushings (if equipped)			X		X		X		X		X	2
Inspect air cleaner, service as required		X	X	X	X	X	X	X	X	X	X	4
Replace engine oil and filter	X	X	X	X	X	X	X	X	X	X	X	1, 4
Check engine coolant freeze point, inspect for leaks	X	X	X	X	X	X	X	X	X	X	X	
Replace coolant every 30,000 mi 48,000 km												2
Clean radiators	X	X	X	X	X	X	X	X	X	X	X	
Replace primary chaincase lubricant	X		X		X		X		X		X	4
Replace transmission lubricant	X				X				X			4
Check right front engine mount end cap screw torque	X		X		X		X		X		X	1, 2, 8
Check engine mount to front crankcase screw torque	X		X		X		X		X		X	1, 2, 8
Inspect oil lines and brake system for leaks, contact or abrasion	X	X	X	X	X	X	X	X	X	X	X	1, 2
Inspect fuel lines and fittings for leaks, contact or abrasion	X	X	X	X	X	X	X	X	X	X	X	1, 2
Inspect rear brake fluid sight glass	X	X	X	X	X	X	X	X	X	X	X	5, 6
Check rear brake reservoir cover screw torque	X		X		X		X		X		X	1, 2, 8
Inspect brake pads and discs for wear	X	X	X	X	X	X	X	X	X	X	X	

Check front axle nut torque	X		X		X		X		X		X	1, 2, 8
Inspect and lubricate jiffy stand	X	X	X	X	X	X	X	X	X	X	X	2, 4
Check clutch cable adjustment (FLHR, FLHRC, FLHP)	X	X	X	X	X	X	X	X	X	X	X	2, 4
Check, adjust and lubricate (with HARLEY LUBE) brake and clutch controls	X	X	X	X	X	X	X	X	X	X	X	
Check tightness of rear wheel spokes (if equipped)	X	X			X			X			X	2, 3, 4
Check rear tire pressure, inspect tread	X	X	X	X	X	X	X	X	X	X	X	1
Inspect and adjust drive belt and sprockets	X	X	X	X	X	X	X	X	X	X	X	2
Check rear axle nut torque	X		X		X		X		X		X	1, 2, 8
Check pressure, operation and leakage of air suspension (if equipped)	X	X	X	X	X	X	X	X	X	X	X	1, 2, 4
Inspect exhaust system for leaks, cracks and loose, or missing fasteners or exhaust shields	X	X	X	X	X	X	X	X	X	X	X	4
Check battery, terminal torque and clean connections annually. Lubricate terminals with ELECTRICAL CONTACT LUBRICANT.												1
Replace spark plugs every two years or every 30,000 mi 48,000 km , whichever comes first.												
Lubricate fuel door hinge and latch with HARLEY LUBE	X	X	X	X	X	X	X	X	X	X	X	
Rebuild front forks											X	2, 10
Replace fuel filter element every 100,000 mi 160,000 km .												2, 4
Inspect rear sprocket isolators for wear at each rear tire change.												
Road test to verify component and system functions	X	X	X	X	X	X	X	X	X	X	X	

NOTES:

1. Perform annually or at specified intervals, whichever comes first.

2. Should be performed by an authorized Harley-Davidson dealer, unless you have the proper tools, service data and are mechanically qualified.

3. Perform spoke tension check at 1000 mi 1600 km , 5000 mi 8000 km , 20,000 mi 32,000 km services and every 15,000 mi 24,000 km interval thereafter. Not all vehicles are equipped with spoke wheels. Consult appropriate topic in service manual.

4. Perform maintenance more frequently in severe riding conditions such as extreme temperatures, dusty environments, mountainous or rough roads, long storage conditions, short runs, heavy stop/go traffic or poor fuel quality.

5. Replace DOT 4 hydraulic fluid and flush system every two years.

6. Brake fluid level will drop as brake pads wear.

7. Clutch fluid level will rise as clutch wears.

8. For torque instructions, see Shop Practices in the service manual.

9. Disassemble, lubricate, inspect and adjust every 25,000 mi 40,000 km .

	10. Disassemble, inspect, rebuild forks and replace fork oil every 50,000 mi 80,000 km .

Maintenance Records

Maintain a record of all service. Refer to Owner's Maintenance Records.

Owner's Maintenance Records

SERVICE MILE INTERVAL	DATE	DEALER NUMBER	TECHNICIAN NAME	TECHNICIAN SIGNATURE
1,000 mi 1,600 km				
5,000 mi 8,000 km				
10,000 mi 16,000 km				
15,000 mi 24,000 km				
20,000 mi 32,000 km				
25,000 mi 40,000 km				
30,000 mi 48,000 km				
35,000 mi 56,000 km				
40,000 mi 64,000 km				
45,000 mi 72,000 km				
50,000 mi 80,000 km				

Service Literature

Visit any Harley-Davidson dealer or go to *www.harley-davidson.com* to purchase a service or parts manual for your motorcycle. Factory authorized manuals are the most complete and detailed source of information outside of your Harley-Davidson dealer. Refer to Service Literature: 2016 Touring Models.

Service Literature: 2016 Touring Models

DOCUMENT	PART NUMBER
Touring Models Service Manual	99483-16
Touring Models Electrical Diagnostic Manual	99497-16
Touring Models Parts Catalog	99456-16
Publication numbers listed are English language manuals. Other languages are available from a Harley-Davidson dealer.	

H-D U.S.A., LLC Trademark Information

Bar & Shield, Boom!, Cross Bones, Cruise Drive, CVO, Digital Tech, Digital Technician, Digital Technician II, Dyna, Electra Glide, Evolution, Fat Bob, Fat Boy, Forty-Eight, Glaze, Gloss, H-D, H-Dnet.com, Harley, Harley-Davidson, HD, Heritage Softail, Iron 883, Low Rider, Night Rod, Nightster, Night Train, Profile, Reflex, Revolution, Road Glide, Road King, Road Tech, Rocker, Screamin' Eagle, Seventy-Two, Softail, Sportster, Street Glide, Street Rod, Sun Ray, Sunwash, Super Glide, SuperLow, Supersmart, Switchback, SYN3, TechLink, TechLink II, Tour-Pak, Tri Glide, Twin Cam 88, Twin Cam 88B, Twin Cam 96, Twin Cam 96B, Twin Cam 103, Twin Cam 103B, Twin Cam 110, Twin Cam 110B, Twin-Cooled, Ultra Classic, V-Rod, VRSC and Harley-Davidson Genuine Motor Parts and Genuine Motor Accessories are among the trademarks of H-D U.S.A., LLC.

Product Registered Marks

Apple, Alcantara S.p.A., Allen, Amp Multilock, Bluetooth, Brembo, City Navigator, Delphi, Deutsch, Dunlop, Dynojet, Fluke, G.E. Versilube, Garmin, Gunk, Hydroseal, Hylomar, iPhone, iPod, Kevlar, Lexan, Loctite, Lubriplate, Keps, K&N, Magnaflux, Marson Thread-Setter Tool Kit, MAXI fuse, Molex, Michelin, MPZ, Mulitilock, nano, NGK, Novus, Packard, Pirelli, Permatex, Philips, PJ1, Pozidriv, Road Tech, Robinair, S100, Sems, SiriusXM, Snap-on, Teflon, Threadlocker, Torca, Torco, TORX, Tufoil, Tyco, Ultratorch, Velcro, X-Acto, XM Satellite Radio, and zumo are among the trademarks of their respective owners.