Safety First

Safe Operating Rules

⚠WARNING

Motorcycles are different from other vehicles. They operate, steer, handle and brake differently. Unskilled or improper use could result in loss of control, death or serious injury. (00556c)

- Take a rider training course.
- Read Owner's Manual before riding, adding accessories or servicing.
- Wear a helmet, eye protection and protective clothing.
- Never tow a trailer.

Before operating your new motorcycle it is your responsibility to read and follow the operating and maintenance instructions in this manual, and follow these basic rules for your personal safety.

- Know and respect the rules of the road (see Rules of the Road). Carefully read and familiarize yourself with the motorcycle safety information that is provided by your country or state. In the United States, read the RIDING TIPS booklet that is provided with your Owner's Manual, and read through the MOTORCYCLE HANDBOOK which is made available by your state.
- Before starting engine, check for proper operation of brake, clutch, shifter, throttle controls, correct fuel and oil supply.

⚠WARNING

Harley-Davidson parts and accessories are designed for Harley-Davidson motorcycles. Using non-Harley-Davidson parts or accessories can adversely affect performance, stability or handling, which could result in death or serious injury. (00001b)

- Use only Harley-Davidson approved parts and accessories. Use of certain other manufacturer's performance parts will void your new motorcycle warranty. See your Harley-Davidson dealer for details.

⚠WARNING

Stop the engine when refueling or servicing the fuel system. Do not smoke or allow open flame or sparks near gasoline. Gasoline is extremely flammable and highly explosive, which could result in death or serious injury. (00002a)

When refueling your motorcycle, the following rules should be observed.

- Refuel in a well ventilated area with the engine turned off.
- Remove fuel filler cap slowly.
- Do not smoke or allow open flames or sparks when refueling or servicing the fuel system.
- Do not fill fuel tank above the bottom of the filler neck insert.
- Leave air space to allow for fuel expansion.

⚠WARNING

Do not store motorcycle with gasoline in tank within the home or garage where open flames, pilot lights, sparks or electric motors are present. Gasoline is extremely flammable and highly explosive, which could result in death or serious injury. (00003a)

⚠WARNING

Engine exhaust from this product contains chemicals known to the State of California to cause cancer, and birth defects or other reproductive harm. (00004f)

⚠WARNING

Do not run motorcycle in a closed garage or confined area. Inhaling motorcycle exhaust, which contains poisonous carbon monoxide gas, could result in death or serious injury. (00005a)

⚠WARNING

The jiffy stand locks when placed in the full forward (down) position with vehicle weight on it. If the jiffy stand is not in the full forward (down) position with vehicle weight on it, the vehicle can fall over which could result in death or serious injury. (00006a)

⚠WARNING

Be sure jiffy stand is fully retracted before riding. If jiffy stand is not fully retracted, it can contact the road surface causing a loss of vehicle control, which could result in death or serious injury. (00007a)

- A new motorcycle must be operated according to the special break-in procedure. See Break-in Riding Rules.
- Operate motorcycle only at moderate speed and out of traffic until you have become thoroughly familiar with its operation and handling characteristics under all conditions.

NOTE:

We recommend that you obtain information and formal training in the correct motorcycle riding technique. In the United States, the Motorcycle Safety Foundation® offers beginning and

advanced rider safety courses. Call 800-446-9227 for information.

⚠WARNING

Travel at speeds appropriate for road and conditions and never travel faster than posted speed limit. Excessive speed can cause loss of vehicle control, which could result in death or serious injury. (00008a)

- Do not exceed the legal speed limit or drive too fast for existing conditions. Always reduce speed when poor driving conditions exist. High speed increases the influence of any other condition affecting stability and increases the possibility of loss of control.
- Pay strict attention to road surfaces and wind conditions. Any two wheeled vehicle may be subject to upsetting forces such as wind blasts from passing trucks, holes in the pavement, rough road surfaces, rider control error, etc. These forces may influence the handling characteristics of your motorcycle. If this happens, reduce speed and guide the motorcycle with a relaxed grip to a controlled condition. Do not brake abruptly or force the handlebar. This may aggravate an unstable condition.
- Keep cargo weight concentrated close to the motorcycle and as low as possible to minimize the change in the motorcycle's center of gravity. Distribute weight evenly on both sides of the vehicle and do not load bulky items too far behind the rider or add weight to the handlebars or front forks. Do not exceed maximum specified load in each saddlebag.

NOTE:

New riders should gain experience under various conditions while driving at moderate speeds.

- Operate your motorcycle defensively. Remember, a motorcycle does not afford the same protection as an automobile in an accident. One of the most common accident situations occurs when the driver of the other vehicle fails to see or recognize a motorcycle and turns left into the on-coming motorcyclist. Operate only with headlamp on.
- Wear an approved helmet, clothing, and foot gear suited for motorcycle riding. Bright or light colors are best for greater visibility in traffic, especially at night. Avoid loose, flowing garments and scarves.

⚠WARNING

Avoid contact with exhaust system and wear protective clothing that completely covers legs while riding. Exhaust pipes and mufflers get very hot when engine is running and remain too hot to touch, even after engine is turned off. Failure to wear protective clothing could result in burns or other serious injury. (00009a)

- When carrying passengers, it is your responsibility to instruct them on proper riding procedures. (See the RIDING TIPS booklet included in your Harley-Davidson Owner's Kit.)

- Do not allow other individuals, under any circumstances, to operate your motorcycle unless you know they are experienced, licensed riders and are thoroughly familiar with the operation of your particular motorcycle.

- Protect your motorcycle against theft. After parking your motorcycle, lock the steering head and remove the key from the motorcycle. Set security alarm if present.
- Safe motorcycle operation requires alert mental judgment combined with a defensive driving

attitude. Do not allow fatigue, alcohol or drugs to endanger your safety or that of others.

- Vehicles equipped with a sound system should have the volume adjusted to a non-distracting level before operating vehicle.
- Maintain your motorcycle in proper operating condition in accordance with Regular Service Intervals: 2011 Softail Models. Particularly important to motorcycle stability is proper tire inflation pressure, tread condition, and proper adjustment of wheel bearings and steering head bearings.

⚠WARNING

Do not operate vehicle with forks locked. Locking the forks restricts the vehicle's turning ability, which could result in death or serious injury. (00035a)

⚠WARNING

Perform the service and maintenance operations as indicated in the regular service interval table. Lack of regular maintenance at the recommended intervals can affect the safe operation of your motorcycle, which could result in death or serious injury. (00010a)

⚠WARNING

Do not operate motorcycle with loose, worn or damaged steering or suspension systems. Contact a Harley-Davidson dealer for repairs. Loose, worn or damaged steering or suspension components can adversely affect stability and handling, which could result in death or serious injury. (00011a)

⚠WARNING

Regularly inspect shock absorbers and front forks. Replace leaking, damaged or worn parts that can adversely affect stability and handling, which could result in death or serious injury. (00012a)

⚠WARNING

Use Harley-Davidson replacement fasteners. Aftermarket fasteners can adversely affect performance, which could result in death or serious injury. (00013a)

- See your Harley-Davidson service manual for proper torque values.
- Aftermarket fasteners may not have the specific property requirements to perform properly.

⚠WARNING

Be sure tires are properly inflated, balanced and have

adequate tread. Inspect your tires regularly and see a Harley-Davidson dealer for replacements. Riding with excessively worn, unbalanced or under-inflated tires can adversely affect stability and handling, which could result in death or serious injury. (00014a)

⚠WARNING

Replace punctured or damaged tires. In some cases, small punctures in the tread area may be repaired from within the demounted tire by a Harley-Davidson dealer. Speed should NOT exceed 50 mph (80 km/h) for the first 24 hours after repair, and the repaired tire should NEVER be used over 80 mph (130 km/h). Failure to follow this warning could result in death or serious injury. (00015a)

⚠WARNING

Do not exceed the motorcycle's Gross Vehicle Weight Rating (GVWR) or Gross Axle Weight Rating (GAWR). Exceeding these weight ratings can affect stability and handling, which could result in death or serious injury. (00016e)

- GVWR is the sum of the weight of the motorcycle, accessories, and the maximum weight of the rider, passenger and cargo that can be safely carried.
- The GVWR is shown on the information plate, located on the frame steering head or the frame downtube.
- GAWR is the maximum amount of weight that can be safely carried on each axle.

⚠WARNING

Do not tow a disabled motorcycle. Towing can adversely affect stability and handling, which could result in death or serious injury. (00017a)

⚠WARNING

Do not pull a trailer with a motorcycle. Pulling a trailer can cause tire overload, reduced braking efficiency and adversely affect stability and handling, which could result in death or serious injury. (00018b)

⚠CAUTION

Direct contact of D.O.T. 4 brake fluid with eyes can cause irritation. Avoid eye contact. In case of eye contact flush with large amounts of water and get medical attention. Swallowing large amounts of D.O.T. 4 brake fluid can cause digestive discomfort. If swallowed, obtain medical attention. Use in well ventilated area. KEEP OUT OF

REACH OF CHILDREN. (00240a)

⚠WARNING

Batteries, battery posts, terminals and related accessories contain lead and lead compounds, and other chemicals known to the State of California to cause cancer, and birth defects or other reproductive harm. Wash hands after handling. (00019e)

⚠WARNING

Do not open storage compartments while riding. Distractions while riding can lead to loss of control, which could result in death or serious injury. (00082a)

⚠WARNING

Consult a Harley-Davidson dealer regarding any questions or problems that occur in the operation of your motorcycle. Failure to do so can aggravate an initial problem, cause costly repairs, cause an accident and could result in death or serious injury. (00020a)

- Be sure all equipment required by federal, state and local law is installed and in good operating condition.

Additional Safe Operating Rules

⚠WARNING

If ABS lamp remains on continuously, the ABS is not operating. The standard brake system is operational, but wheel lock up can occur. Contact a Harley-Davidson Dealer to have ABS repaired. A locked wheel will skid and can cause loss of vehicle control, which could result in death or serious injury. (00361a)

⚠WARNING

ABS cannot prevent lockup of rear wheel due to engine braking. ABS will not aid in cornering or on loose/uneven surfaces. A locked wheel will skid and can cause loss of vehicle control, which could result in death or serious injury. (00362a)

See Brake System to properly operate motorcycles equipped with an Anti-lock Brake System (ABS).

Rules of the Road

- Always sound your horn, actuate your turn signals, and exercise caution when passing other vehicles going in the same direction. Never try to pass another vehicle going in the same direction at street intersections, on curves, or when going up or down a hill.
- At street intersections give the right-of-way. Do not presume you have the right-of-way, as the other driver may not know it is your turn.
- Always signal when preparing to stop, turn or pass.
- All traffic signs, including those used for the control of traffic at intersections, should be obeyed promptly. SLOW DOWN signs near schools and CAUTION signs at railroad crossings should always be observed and your actions governed accordingly.
- When intending to turn, signal at least 100 ft 30.5 m before reaching the turning point. If turning across an intersection, move over to the centerline of the street (unless local rules require otherwise). Slow down when entering the intersection and turn carefully.
- Never anticipate a traffic light. When a change is indicated from GO to STOP (or STOP to GO) in the traffic control systems at intersections, slow down and wait for the light to change. Never run through a yellow or red traffic light.
- While turning either right or left, watch for pedestrians, animals, as well as vehicles.
- Do not leave the curb or parking area without signaling. Be sure your way is clear to enter moving traffic. A moving line of traffic always has the right-of-way.
- Be sure your license plate is installed in the position specified by law and is clearly visible at all times. Keep the plate clean.
- Ride at a safe speed that is consistent with the type of highway you are on. Pay strict attention to whether the road is dry, oily, icy or wet.
- Watch for debris such as leaves or loose gravel.
- Weather and traffic conditions on the highway dictate adjusting your speed and driving habits accordingly.

Accessories and Cargo

Harley-Davidson Motor Company cannot test and make specific recommendations concerning every accessory or combination of accessories sold. Therefore, the rider must be responsible for safe operation of the motorcycle when installing accessories or carrying additional weight.

CAUTION

Rocker models have a rear fork-mounted fender. The fender will not support a passenger or fender-mounted luggage rack. Damage to the fender could occur. (00557g)

⚠WARNING

See the Accessory and Cargo section in your Owner's Manual. Improper loading of cargo or installation of accessories can affect motorcycle stability and handling, which could result in death or serious injury. (00021a)

⚠WARNING

Do not exceed the motorcycle's Gross Vehicle Weight Rating (GVWR) or Gross Axle Weight Rating (GAWR). Exceeding these weight ratings can affect stability and

handling, which could result in death or serious injury. (00016e)

⚠WARNING

Do not pull a trailer with a motorcycle. Pulling a trailer can cause tire overload, reduced braking efficiency and adversely affect stability and handling, which could result in death or serious injury. (00018b)

- GVWR is the sum of the weight of the motorcycle, accessories, and the maximum weight of the rider, passenger and cargo that can be safely carried.
- GAWR is the maximum amount of weight that can be safely carried on each axle.
- The GVWR and GAWR are shown on the information plate which is located on the frame down tube.

Accessory and Cargo Guidelines

The following guidelines should be used when equipping a motorcycle, carrying passengers and/or cargo.

⚠WARNING

Travel at speeds appropriate for road and conditions and never travel faster than posted speed limit. Excessive speed can cause loss of vehicle control, which could result in death or serious injury. (00008a)

- Do not exceed the legal speed limit or drive too fast for existing conditions. Always reduce speed when poor driving conditions exist. High speed increases the influence of any other condition affecting stability and increases the possibility of loss of control.
- Pay strict attention to road surfaces and wind conditions. Any two wheeled vehicle may be subject to upsetting forces such as wind blasts from passing trucks, holes in the pavement, rough road surfaces, rider control error, etc. These forces may influence the handling characteristics of your motorcycle. If this happens, reduce speed and guide the motorcycle with a relaxed grip to a controlled condition. Do not brake abruptly or force the handlebar. This may aggravate an unstable condition.
- Keep cargo weight concentrated close to the motorcycle and as low as possible. This minimizes the change in the motorcycle's center of gravity.
- Distribute weight evenly on both sides of the vehicle.
- Do not load bulky items too far behind the rider or add weight to the handlebars or front forks.
- Do not exceed maximum specified load in each saddlebag.
- Luggage racks are designed for lightweight items. Do not overload racks.
- Be sure cargo is secure and will not shift while riding and recheck the cargo periodically. Accessories that change the operator's riding position may increase reaction time and affect handling of the motorcycle.
- Additional electrical equipment may overload the motorcycle's electrical system possibly resulting in electrical system and/or component failure.

⚠WARNING

The front and/or rear guard(s) can provide limited leg and cosmetic vehicle protection under unique circumstances. (Fall over while stopped, very slow speed slide.) It is not made or intended to provide protection from bodily injury in a collision with another vehicle or any other object. (00022a)

Large surfaces such as fairings, windshields, backrests, and luggage racks can adversely affect handling. Only genuine Harley-Davidson items designed specifically for the motorcycle model should be used with proper installation.

⚠WARNING

Harley-Davidson parts and accessories are designed for Harley-Davidson motorcycles. Using non-Harley-Davidson parts or accessories can adversely affect performance, stability or handling, which could result in death or serious injury. (00001b)

⚠WARNING

Only Touring Harley-Davidson Motorcycles are suitable for sidecar use. Consult a Harley-Davidson dealer. Use of motorcycles other than Touring models with sidecars could result in death or serious injury. (00040a)

Noise Control System

Tampering

Owners are warned that removal or replacement of any noise control system component may be prohibited by law. This prohibition applies prior to vehicle sale or delivery to the ultimate purchaser. Use of a vehicle on which noise control system components have been removed or rendered inoperative may also be prohibited by law.

Identification

Vehicle Identification Number (VIN)

General

See Typical Harley-Davidson VIN: 2011 Softail Models. A unique 17-digit serial or Vehicle Identification Number (VIN) is assigned to each motorcycle. Refer to Harley-Davidson VIN Breakdown: 2011 Softail Models.

Location

See VIN Locations. The full 17-digit VIN is stamped on the right side of the frame near the steering head. In some destinations, a printed VIN label is also attached to the right front downtube.

Abbreviated VIN

An abbreviated VIN showing the vehicle model, engine type, model year, and sequential number is stamped on the left side of the crankcase between the engine cylinders.

NOTE:

Always give the full 17-digit Vehicle Identification Number when ordering parts or making any inquiry about your motorcycle.

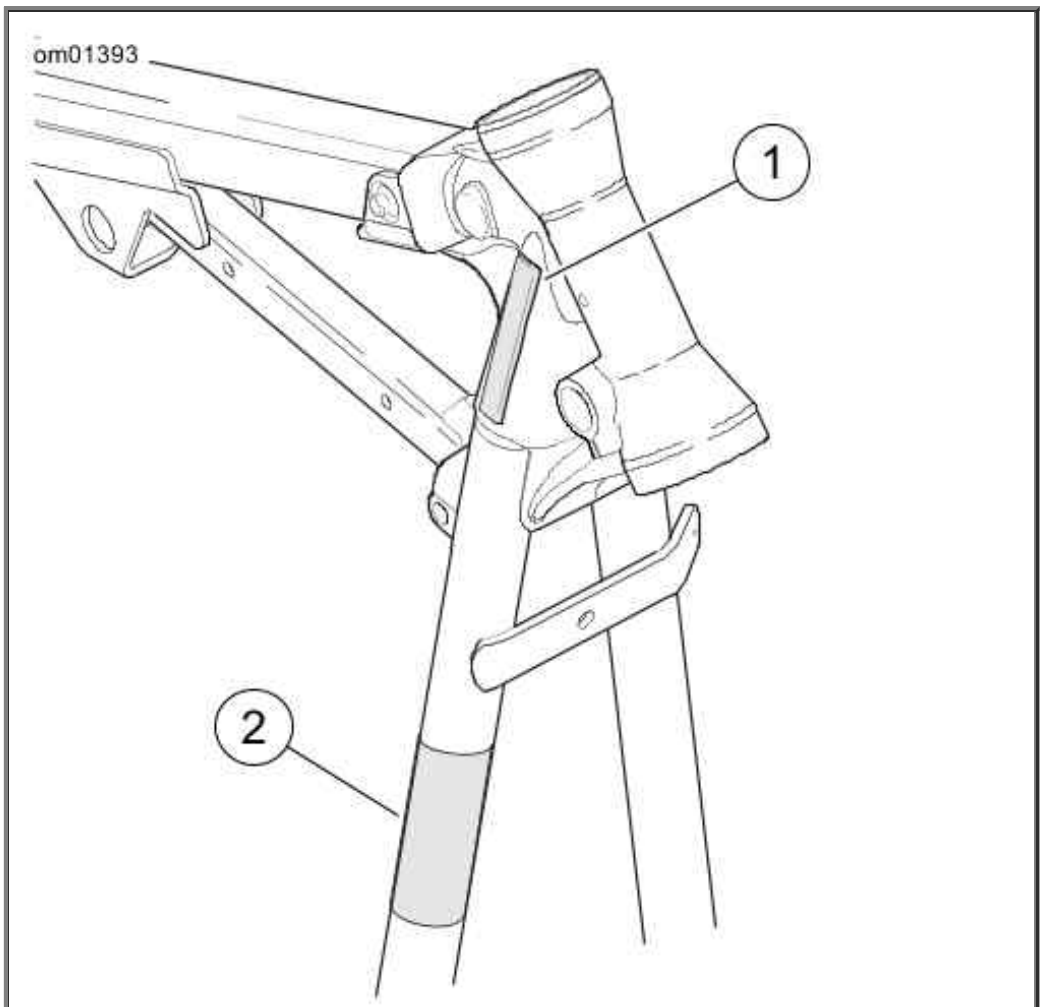

1. Stamped VIN
2. VIN label

VIN Locations

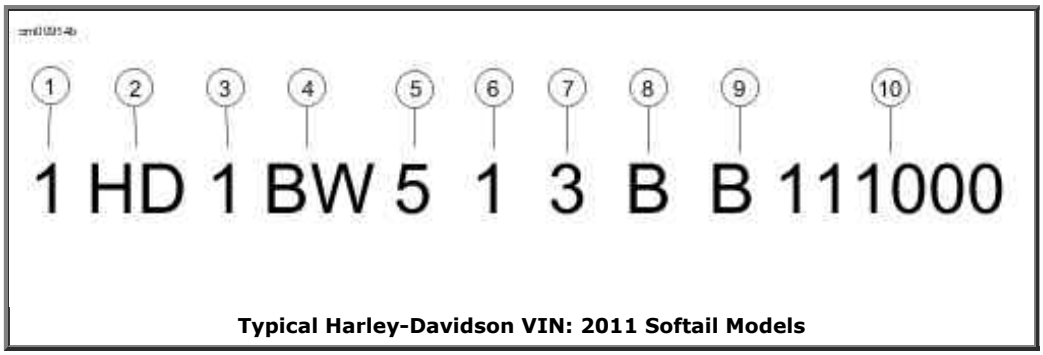

Typical Harley-Davidson VIN: 2011 Softail Models

Harley-Davidson VIN Breakdown: 2011 Softail Models

POSITION	DESCRIPTION	POSSIBLE VALUES	
1	Market designation	1=Originally manufactured for sale **within** the United States 5=Originally manufactured for sale **outside** of the United States	
2	Manufacturer/vehicle type	HD=Harley-Davidson motorcycle	
3	Motorcycle type	1=Heavyweight motorcycle (901 cm^3 and larger)	
4	Model	See VIN model table	
5	Engine type	5=Twin Cam 96B™, 1584 cm^3 air-cooled, fuel-injected,balanced	
6	Introduction date/calibration	**Normal Introduction**	**Mid-year or Special Introduction**
		1=Domestic	2, 4=Domestic
		3=California	5, 6=California
		A=Canada	B=Canada
		C=HDI	D=HDI
		E=Japan	F=Japan
		G=Australia	H=Australia
		J=Brazil	K=Brazil
		L=Asia Pacific	M=Asia Pacific
		N=India	P=India
7	VIN check digit	Can be 0-9 or X	
8	Model year	B=2011	
9	Assembly plant	B=York, PA U.S.A.	
10	Sequential number	Varies	

VIN Model Codes: 2011 Softail Models

CODE	MODEL	CODE	MODEL

BV	FXST Softail® Standard (HDI, JPN, AUS markets)	JH	FLSTC Shrine
BW	FLSTC Heritage Softail® Classic	JK	FXCWC Softail Rocker™ C
BX	FLSTF Fat Boy®	JM	FLSTSB Softail™ Cross Bones™
JD	FLSTN Softail® Deluxe	JN	FLSTFB Softail® Fat Boy® Lo (CAL, CAN, DOM, JPN markets) FLSTFB Softail® Fat Boy® Special (HDI, HDE markets)
JG	FLSTF Shrine	JP	FXS Blackline™

Labels

See Labels: Softail Models for safety and maintenance labels which were on the vehicle when new. If removed, replacement labels may be purchased for your motorcycle. Refer to Labels.

NOTE:

Some labels may be available in different languages for destinations outside the United States. See a Harley-Davidson dealer for all labels available for purchase.

Labels

ITEM	PART NO.	DESCRIPTION	LOCATION
1	29127-95B	General warnings	Top of chrome air cleaner cover
2	29404-01A	General warnings	Top of black air cleaner cover (FLSTFB/FLSTSB only)
3	15368-01A	Battery warning	On frame, left of battery
	14263-04	Battery warning (Brazil)	Side of battery
4	Not sold separately	Shock absorber label	On shock absorbers

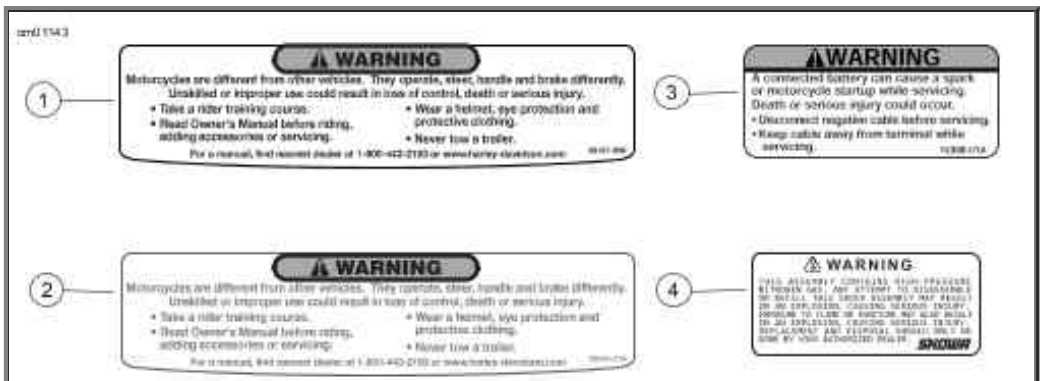

Labels: Softail Models

Specifications

Specifications

Engine

ITEM	SPECIFICATION	
Number of cylinders	2	
Type	4-cycle, 45 degree V-Type, air cooled	
Compression ratio	9.2-1	
Bore	3.750 in	95.25 mm
Stroke	4.380 in	111.25 mm
Displacement	96.0 in^3	1585 cm^3

Electrical

COMPONENT	SPECIFICATION	
Ignition timing	Not adjustable	
Battery	12 V, 19 Ah, sealed and maintenance-free	
Charging system	Three-phase, 38 A system (439W @ 13V, 2000 rpm, 489W max power @ 13V)	
Spark plug type	6R12	
Spark plug size	12 mm	
Spark plug gap	0.038-0.043 in	0.97-1.09 mm
Spark plug torque	12-18 ft-lb	16.3-24.4 Nm

NOTE:

Specifications in this publication may not match those of official certification in some markets due to timing of publication printing, variance in testing methods, and/or vehicle differences. Customers seeking officially recognized regulatory specifications for their vehicle should refer to certification documents and/or contact their respective dealer or distributor.

Transmission

TRANSMISSION	SPECIFICATION
Type	Constant mesh, foot shift
Speeds	6 forward

Sprocket Teeth

DRIVE	ITEM	NUMBER OF TEETH
Primary	Engine	34
	Clutch	46
Final	Transmission	32
	Rear wheel	66*
*64 teeth on Japanese models		

Gear Ratios

GEAR	RATIO	
	DOMESTIC AND INTERNATIONAL	JAPANESE MODELS
1st Gear	9.311	9.029
2nd Gear	6.454	6.259
3rd Gear	4.793	4.648
4th Gear	3.882	3.764
5th Gear	3.307	3.207
6th Gear	2.790	2.706

Capacities

ITEM	U.S.	L
Fuel tank (total): All Models but FXCWC	5.00 gal	18.93
Fuel tank (total): FXCWC	4.90 gal	18.54
Low fuel warning light on	1.00 gal	3.79
Oil tank with filter	3.50 qt	3.31
Transmission (approximate)	1.00 qt	0.95
Primary chaincase (approximate)	1.00 qt	0.95

Dimensions: FLSTFB, FLSTC, FLSTF, FLSTN and FLSTSB

ITEM	FLSTFB		FLSTC		FLSTF		FLSTN		FLSTSB	
	in	mm	in	mm	in	mm	in	mm	in	mm

Wheel base	64.5	1638	64.5	1638	64.5	1638	64.5	1638	64.5	1638
Overall length	94.3	2395	94.5	2400	94.3	2395	94.7	2405	90.5	2299
Overall width	39.2	996	37.6	955	39.2	996	38.6	980	38.1	968
Road clearance	4.8	122	5.1	130	5.1	130	4.8	122	4.9	124
Overall height	44.3	1125	55.2	1402	44.5	1130	44.3	1125	52.6	1337
Saddle height*	24.3	616	25.5	648	25.4	645	24.5	622	26.6	676
*With 180 lb 81.6 kg rider on seat										

Dimensions: FXCWC, FXST and FXS

ITEM	FXCWC		FXST		FXS	
	in	mm	in	mm	in	mm
Wheel base	69.2	1758	64.5	1638	66.5	1689
Overall length	95.0	2413	94.5	2400	93.0	2362
Overall width	35.1	892	36.2	919	34.0	864
Road clearance	5.1	130	5.1	130	5.25	133
Saddle height*	25.2	640	26.1	663	24.0	610
*With 180 lb 81.6 kg rider on seat.						

Weights: FLSTC, FLSTF, FLSTN and FLSTSB

ITEM	FLSTC		FLSTF		FLSTN		FLSTSB	
	lb	kg	lb	kg	lb	kg	lb	kg
Weight as shipped from factory	730	331.1	694	314.8	695	315.3	700	317.5
GVWR	1160	526.2	1160	526.2	1160	526.2	1150	521.6
GAWR front	430	195.0	430	195.0	430	195.0	426	193.2
GAWR rear	730	331.1	730	331.1	730	331.1	724	328.4

Weights: FXCWC, FLSTFB, FXST and FXS

ITEM	FXCWC		FLSTFB		FXST		FXS	
	lb	kg	lb	kg	lb	kg	lb	kg
Weight as shipped from factory	686	311.3	700	317.5	654	296.7	639	289.8
GVWR	1175	533.0	1160	526.2	1125	510.3	1124	509.8
GAWR front	415	188.2	430	195.1	415	188.2	414	187.8
GAWR rear	760	344.7	730	331.1	710	322.1	710	322.1

NOTE:

Gross Vehicle Weight Rating (GVWR) (maximum allowable loaded vehicle weight) and corresponding Gross Axle Weight Ratings (GAWR) are given on a label located on the frame

below the steering head.

⚠WARNING

Use only Harley-Davidson approved tires. See a Harley-Davidson dealer. Using non-approved tires can adversely affect stability, which could result in death or serious injury. (00024a)

Tires

MODEL	MOUNT	SIZE	APPROVED TIRE	PRESSURE (COLD)	
				psi	kPa
FLSTSB, FLSTC	front	16 in	Dunlop D402F MT90B16	36	248
FLSTN, FLSTC (whitewall)	front	16 in	Dunlop D402F MT90B16	36	248
FLSTF, FLSTFB	front	17 in	Dunlop D408F 140/75R17	36	248
FXS, FXST	front	21 in	Dunlop D408F MH90-21	30	206
FXCWC	front	19 in	Dunlop D408F 90/90-19	30	206
FLSTC	rear	16 in	Dunlop D401 150/80B16	40	276
FLSTN, FLSTC (whitewall)	rear	16 in	Dunlop D402 MU85B16	40	276
FXS	rear	16 in	Dunlop D402 MU85B16	40	276
FLSTF, FXST, FLSTFB	rear	17 in	Dunlop D407 200/55R17	42	290
FLSTSB	rear	17 in	Dunlop D401 200/55R17	42	290
FXCWC	rear	18 in	Dunlop D407 240/40R18	42	290

Bulb Chart

LAMP	DESCRIPTION (ALL LAMPS 12 V)	BULBS REQUIRED	CURRENT DRAW (AMPERAGE)		HARLEY-DAVIDSON PART NUMBER
Headlamp	High beam/low beam	1	4.7 (HI)	4.3 (LO)	68329-03
	Position lamp international	1	0.32		53436-97
Tail and stop lamp (all models except FLSTN, FXCWC and international FXS)	Tail/stop lamp	1	0.59/2.10		68167-04
	Tail/stop lamp international	1	0.59/2.10		68167-04
Tail and stop lamp (FLSTN)	Tail/stop lamp	1	0.59/2.10		68168-89A
	Tail/stop lamp international	1	0.59/2.10		68169-90A
Turn signal lamps	Front/running	2	2.25 (turn	0.59 (front	68168-89A

			signals)	running)
	Front international (except FLSTC)	2	1.75	68163-84
	Front international (FLSTC)	2	1.75	68572-64B
	Rear (except FXS and FXCWC)	2	2.25	68572-64B
	Rear (FXS)	2	2.25	68168-89A
	Rear international (except FXS and FXCWC)	2	1.75	68163-84
	Rear turn signal/tail/stop lamp (FXCWC and international FXS)	Illuminated with LEDs. Replace entire assembly upon failure.		
Auxiliary lamps	FLSTC/FLSTN	2	2.50	68453-05
	Fog lamp international	2	2.92	68453-05
Fender tip lamp	FLSTC	2	0.10	68193-95
Instrument panel lamps	Illuminated with LEDs. Replace entire assembly upon failure.			

Tire Data

⚠WARNING

Match tires, tubes, rim seals, air valves and caps to the correct wheel rim. Contact a Harley-Davidson dealer. Mismatching can result in damage to the tire bead, allow tire slippage on the rim or cause tire failure, which could result in death or serious injury. (00023b)

⚠WARNING

Use only Harley-Davidson approved tires. See a Harley-Davidson dealer. Using non-approved tires can adversely affect stability, which could result in death or serious injury. (00024a)

See Tires for approved tires and recommended pressures.

Tubeless tires fitted with the correct size inner tubes may be used on Harley-Davidson laced (wire spoked) wheels.

⚠WARNING

Use inner tubes on laced (wire spoked) wheels. Using tubeless tires on laced wheels can cause air leaks, which could result in death or serious injury. (00025a)

Tubeless tires are used on all Harley-Davidson cast and disc wheels.

Tire sizes are molded on the tire sidewall. Inner tube sizes are printed on the tube.

⚠WARNING

Harley-Davidson front and rear tires are not the same. Interchanging front and rear tires can cause tire failure, which could result in death or serious injury. (00026a)

⚠WARNING

Do not inflate tire beyond maximum pressure as specified on sidewall. Over inflated tires can blow out, which could result in death or serious injury. (00027a)

⚠WARNING

Harley-Davidson tires are equipped with wear bars that run horizontally across the tread. When wear bars become visible and only 1/32 in. (0.8 mm) tread depth remains, replace tire immediately. Using a worn tire can adversely affect stability and handling, which could result in death or serious injury. Use only Harley-Davidson approved replacement tires. (00090b)

Gasoline Blends

Your motorcycle was designed to get the best performance and efficiency using unleaded gasoline. Most gasoline is blended with alcohol and/or ether to create oxygenated blends. The type and amount of alcohol or ether added to the fuel is important.

CAUTION

Do not use gasoline that contains methanol. Doing so can result in fuel system component failure, engine damage and/or equipment malfunction. (00148a)

- Gasoline containing METHYL TERTIARY BUTYL ETHER (MTBE): Gasoline/MTBE blends are a mixture of gasoline and as much as 15% MTBE. Gasoline/MTBE blends can be used in your motorcycle.
- ETHANOL is a mixture of 10% ethanol (Grain alcohol) and 90% unleaded gasoline. Gasoline/ethanol blends can be used in your motorcycle if the ethanol content does **not** exceed 10%.
- REFORMULATED OR OXYGENATED GASOLINES (RFG): Reformulated gasoline is a term used to describe gasoline blends that are specifically designed to burn cleaner than other types of gasoline, leaving fewer tailpipe emissions. They are also formulated to evaporate less when you are filling your tank. Reformulated gasolines use additives to oxygenate the gas. Your motorcycle will run normally using this type of gas and Harley-Davidson recommends you use it when possible, as an aid to cleaner air in our

environment.
- Do not use race gas or octane boosters. Use of these fuels will damage the fuel system.

Some gasoline blends might adversely affect the starting, driveability or fuel efficiency of the motorcycle. If any of these problems are experienced, try a different brand of gasoline or gasoline with a higher octane blend.

Fuel

Always use a good quality unleaded gasoline. Octane ratings are usually found on the pump. Refer to Octane Ratings.

⚠WARNING

Avoid spills. Slowly remove filler cap. Do not fill above bottom of filler neck insert, leaving air space for fuel expansion. Secure filler cap after refueling. Gasoline is extremely flammable and highly explosive, which could result in death or serious injury. (00028a)

⚠WARNING

Use care when refueling. Pressurized air in fuel tank can force gasoline to escape through filler tube. Gasoline is extremely flammable and highly explosive, which could result in death or serious injury. (00029a)

Modern service station pumps dispense a high flow of gasoline into a motorcycle fuel tank making air entrapment and pressurization a possibility.

Octane Ratings

SPECIFICATION	RATING
Pump Octane (R+M)/2	91 (95 RON)

Catalytic Converter

The motorcycle is equipped with catalytic converters.

CAUTION

Do not operate catalytic converter-equipped vehicle with engine misfire. If you operate the vehicle under this condition, the exhaust will become abnormally hot, which can cause vehicle damage, including emission control loss. (00149c)

CAUTION

Use only unleaded fuel in catalytic converter-equipped motorcycles. Using leaded fuel will damage the emission control system. (00150b)

Controls and Indicators

General: Controls and Indicators

⚠WARNING

Read the CONTROLS AND INDICATORS section before riding your motorcycle. Failure to understand the operation of the motorcycle could result in death or serious injury. (00043a)

Some features explained are unique to certain models. These features may be available as accessories for your Harley-Davidson motorcycle. See a Harley-Davidson dealer for a complete list of accessories that will fit your specific motorcycle.

Ignition Switch

General

⚠WARNING

The automatic-on headlamp feature provides increased visibility of the rider to other motorists. Be sure headlamp is on at all times. Poor visibility of rider to other motorists can result in death or serious injury. (00030b)

Refer to Ignition Switch Positions: Softail Models. The ignition switch controls electrical functions of the motorcycle.

See the "YOUR OWNER'S MANUAL" section at the front of this book. Be sure to record all your key numbers in the space provided.

NOTE:

The lamps work when the switch is in the IGN position, as required by law in some localities.

CAUTION

Protect your vehicle against theft. Failure to lock the motorcycle after parking could result in theft and/or equipment damage. (00151b)

⚠WARNING

Do not operate vehicle with forks locked. Locking the forks restricts the vehicle's turning ability, which could result in death or serious injury. (00035a)

CAUTION

Do not lubricate barrel locks with petroleum based lubricants or graphite. Inoperative locks may result. (00152a)

All Models Except FXS/FXCWC

See Ignition Switch: Softail Models (Except FXS/FXCWC). The ignition switch is located on the instrument panel on top of the tank.

Unlock: To unlock the switch, insert key and turn clockwise to unlock position. Remove the key from ignition switch before operating motorcycle. If you do not remove key, it can fall out while riding.

Operate: Rotate switch to desired position. Refer to Ignition Switch Positions: Softail Models for ignition switch functions.

Lock: The switch can be locked in the OFF or ACC position. To lock the switch, raise the switch cover, insert key, and turn counterclockwise to LOCK position.

CAUTION

Turn the ignition switch to the OFF position before locking the motorcycle. Leaving the switch in the ACC position will keep the instrument lights on and result in a discharged battery. (00492b)

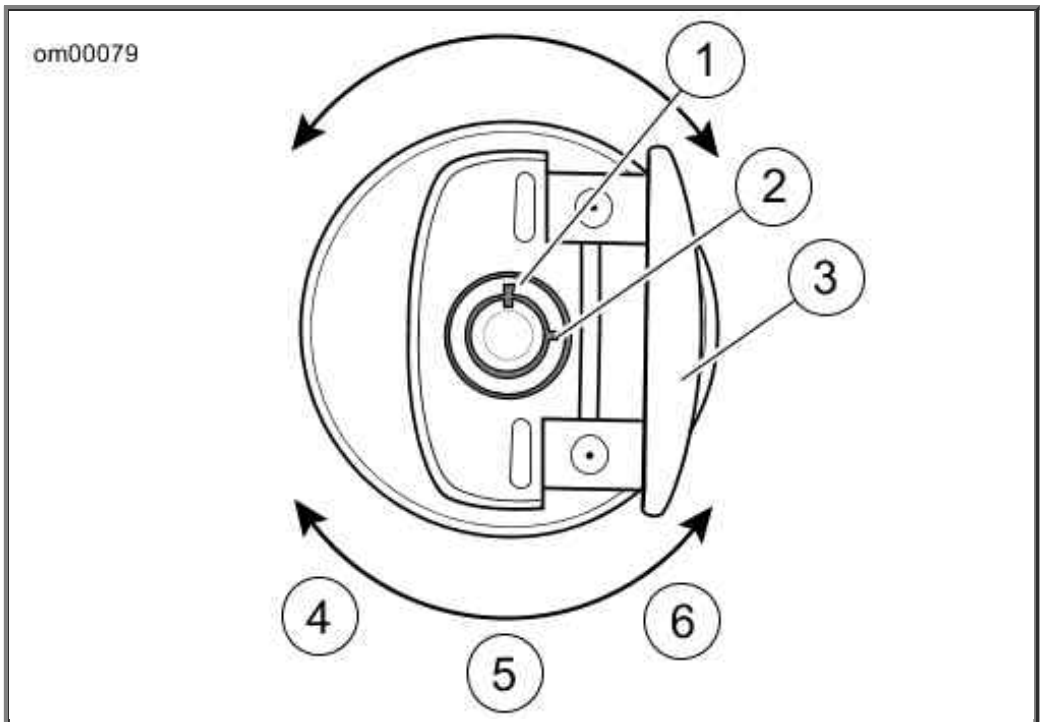

1. Lock position
2. Unlock position
3. Open switch cover
4. IGN
5. OFF (lock)
6. Accessory (lock)

Ignition Switch: Softail Models (Except FXS/FXCWC)

FXS/FXCWC Models

See Ignition Switch: FXS/FXCWC Models. The ignition switch is located on the left side of the vehicle between the engine cylinders.

Unlock: Insert key and turn clockwise to unlock the thumb lever. Remove the key when riding. Riding with a key attached to a keychain or fob can damage the cosmetic surface of the ignition coil.

Operate: Use the thumb lever to select the ACC or IGN positions. Refer to Ignition Switch Positions: Softail Models for ignition switch functions.

Lock: Turn the thumb lever to OFF. Insert the key and turn counterclockwise to lock the thumb lever. Remove the key.

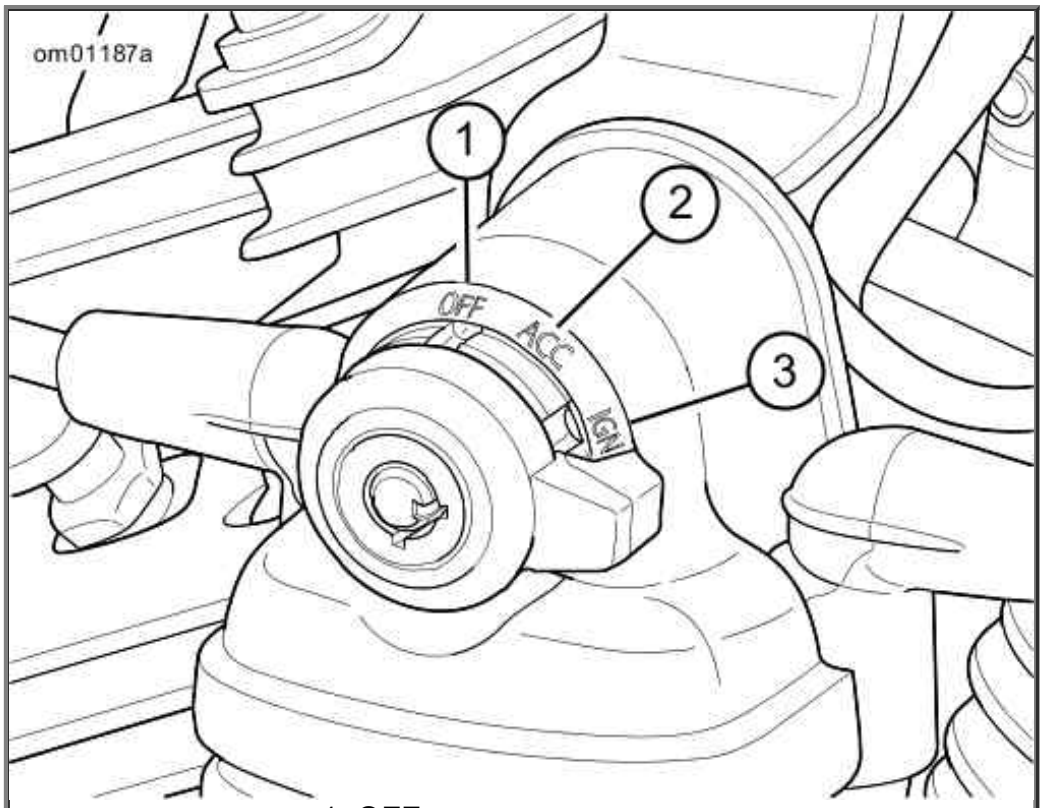

1. OFF
2. ACC
3. IGN

Ignition Switch: FXS/FXCWC Models

Ignition Switch Positions: Softail Models

SWITCH POSITION	FUNCTION
OFF	Ignition, lamps and accessories are off.
ACC*	Accessories are on. Hazard warning flashers can be operated. Instrument lamps are on. The headlamp switch can be switched between HI and LO. Brake lamp and horn can be activated.
IGNITION*	Ignition, lamps and accessories are on.
*International models have an additional function - position lamp and tail lamp are also on. NOTE: Leaving the motorcycle in ACC for an extended amount of time can discharge the battery. If in ACC, the motorcycle will be automatically turned OFF after two hours to prevent battery from complete discharge. To resume normal operation turn the ignition switch back to OFF and then to the desired position.	

Hand Controls

Electric Starter Switch

See Handlebar Controls. The electric starter switch (5) is located on the right handlebar control group. See Starting the Engine.

1. Put the engine OFF/RUN switch (6) in the RUN position and the transmission in neutral. Neutral (green) indicator lamp should be illuminated.

2. See Ignition Switch: Softail Models (Except FXS/FXCWC). Turn the ignition switch to IGN and push the START switch to operate starter motor.

   NOTES:
   - *When the starter is activated, the headlamp will be momentarily turned off to reduce battery load.*
   - *If the engine does not start, the starter motor will operate for five seconds and then stop. Release and press the START switch. After several unsuccessful start attempts, see a Harley-Davidson dealer.*

Hazard Warning 4-Way Flasher

The hazard warning switch (5) is located above the electric starter switch. This system allows a stranded motorcycle to be left in the 4-way flashing mode and secured until help is found.

1. With the ignition switch in the IGN or ACC position, press on the hazard warning triangle to activate the 4-way flashers.

   NOTE:

   If equipped with the optional security system, the fob must be present when turning the 4-way flashers on and when canceling the flashers.

2. Turn the ignition to OFF. The 4-way flashers will continue for two hours or until the operation is cancelled by the rider.

3. To cancel, turn the ignition to ACC or ON and press the warning triangle above the electric starter switch.

Engine OFF/RUN Switch

See Handlebar Controls. The engine OFF/RUN switch (6) turns the engine power on or off. The engine OFF/RUN switch is located on the right handlebar control. Push the top portion of the engine OFF/RUN switch to turn off engine power and shut the engine off. Push the bottom portion of the engine OFF/RUN switch to enable engine start and run.

NOTES:

- *The engine OFF/RUN switch must be in the RUN position to start or operate the engine.*
- *The engine OFF/RUN switch should be used to shut the engine off.*

1. To shut the engine off, push the top of the OFF/RUN switch to the OFF position.

2. See Ignition Switch: Softail Models (Except FXS/FXCWC). Turn the ignition switch to the OFF position to turn the electric power completely OFF.

Throttle Control Grip

See Handlebar Controls. The throttle control grip (8) is located on the right handlebar control and is operated with the right hand.

To reduce rider fatigue on long trips, a spring-loaded throttle friction adjustment screw (10) is located at the bottom of the throttle grip clamp on non-cruise equipped models.

1. Slowly turn throttle control grip clockwise (toward the front of the motorcycle) to close the throttle (decelerate).
2. Slowly turn throttle control grip counterclockwise (toward rear of motorcycle) to open the throttle (accelerate).

⚠WARNING

Do not tighten throttle friction adjustment screw to the point where the engine will not return to idle automatically. Over-tightening can lead to loss of vehicle control, which could result in death or serious injury. (00031b)

3. Loosen the throttle friction adjustment screw so the throttle returns to the idle position when the hand is removed from the grip.
4. Screw the throttle adjustment screw in to increase friction on the grip. This provides a damping effect on throttle motion.

NOTE:

The throttle friction adjustment screw should not be used under normal stop and go operating conditions.

Clutch Hand Lever

⚠WARNING

Do not position fingers between hand control lever and handlebar grip. Improper hand positioning can impair control lever operation and cause loss of vehicle control, which could result in death or serious injury. (00032a)

See Handlebar Controls. The clutch hand lever (1) is located on the left handlebar and is operated with the fingers of the left hand.

1. Slowly pull clutch hand lever in against handlebar grip to fully disengage clutch.
2. Shift to first gear using the gear shifter lever. See Gear Shift Lever.
3. Slowly release the clutch hand lever to engage clutch.

A clutch switch is incorporated into the left handlebar switch assembly. It enables the rider to start the vehicle in any gear (or in neutral) as long as the clutch lever is pulled in. If the clutch is not disengaged and the vehicle is in gear, the vehicle will not start.

HORN/TRIP Switch

HORN: See Handlebar Controls. The horn is operated by pressing on the HORN switch (2)

located on the left handlebar control. The horn can be activated for up to 10 seconds at a time. If the Horn Button is held for a longer period, the horn will automatically deactivate.

TRIP: The TRIP switch activates the trip odometers and is used to activate the odometer display to scroll through different screens of the display and to enter diagnostics mode to retrieve Diagnostic Trouble Codes (DTCs). With the ignition switch in OFF, the trip switch can activate time or odometer displays.

Headlamp Dimmer Switch

See Handlebar Controls. The headlamp dimmer switch (3) is located on the left handlebar. The switch has two positions to activate the headlamps high or low beams.

- Press the top of the headlamp dimmer beam switch to activate the high beam.
- Press the bottom of the headlamp dimmer switch to return to the low beam.

See Indicator Lamps (Typical). The (blue) high beam indicator lamp will illuminate when the high beam is on.

Turn Signal Switches

See Handlebar Controls. Each handlebar control group contains a turn signal switch.

- The right turn signal switch (11) operates the right front and right rear flashing lamps.
- The left turn signal switch (4) operates the left front and left rear flashing lamps.

NOTE:

Front turn signal lamps also function as running lamps. Due to local regulations, this feature may not be available in all locations.

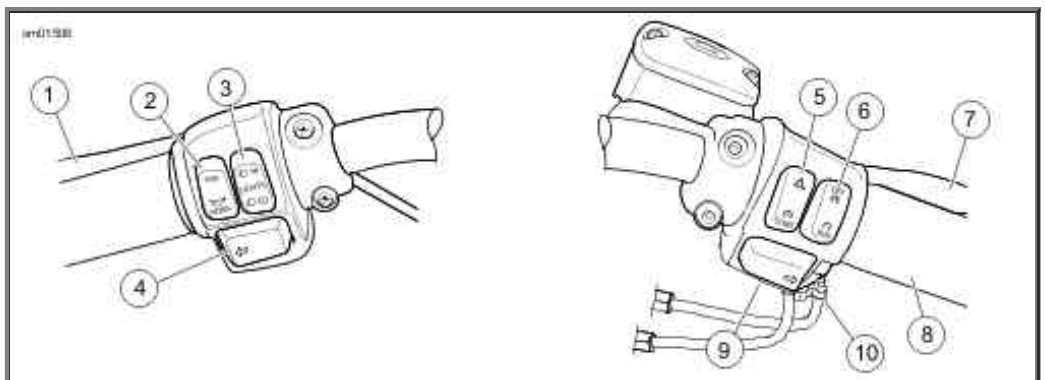

1. Clutch hand lever
2. Horn/trip switch
3. Headlamp dimmer switch
4. Left turn signal switch
5. Electric starter/hazard warning switch
6. Engine off/run switch
7. Brake hand lever
8. Throttle control grip
9. Right turn signal switch
10. Friction adjustment screw

Handlebar Controls

Turn Signal Switch Operation

The turn signal switches are used by the turn signal module to control turn signal operation based on vehicle speed, vehicle acceleration and turn completion.

Momentarily press the desired turn signal switch. The turn signal lamps will begin and continue flashing until they are manually or automatically cancelled. As long as the motorcycle is stationary, the signals will flash.

NOTES:

- *If you are signaling to turn in one direction and you press the switch for the opposite turn signal, the first signal is cancelled and the opposite side begins flashing.*
- *If you want to stop the lamps from flashing, briefly press the turn signal switch a second time. The turn signal lamps will stop flashing.*
- *If a turn signal indicator is flashing at a high rate, a turn signal bulb is not operating. Exercise caution and use hand signals. Replace defective bulbs immediately.*

Instruments

Speedometer

⚠WARNING

Travel at speeds appropriate for road and conditions and never travel faster than posted speed limit. Excessive speed can cause loss of vehicle control, which could result in death or serious injury. (00008a)

See Speedometer/Odometer/Tachometer (Typical) and Instruments: FLSTSB. The speedometer registers miles per hour (U.S. models only) or kilometers per hour (international models only).

Odometer

Pressing the TRIP switch with the ignition switch in any position will activate the odometer reading.

The odometer window in the speedometer face also provides the following selectable displays:

- Odometer
- Trip odometer A
- Trip odometer B
- Fuel range
- Time
- Gear number and tachometer

Press and release the TRIP switch to cycle through the displays.

Trip Odometers A and B

To check mileage or to reset trip odometers, the ignition switch must be in the ACC or IGN position. Press and release the TRIP switch until the desired trip odometer register (A or B) is displayed. An A or B in the upper left of the display window identifies the trip odometer.

To reset or zero trip odometers, have desired (A or B) odometer in display window. Press the TRIP switch and hold for approximately three seconds. The trip odometer will be reset to zero.

Gear Selection

Press and release the TRIP switch to cycle through the odometer window displays to the gear number and the tachometer display. The gear number will read 1-6.

In neutral or with the clutch lever pulled in, the gear number in the display will be blank.

Tachometer

Press and release the TRIP switch to cycle through the odometer window displays to the gear number and the tachometer display. The tachometer will read in rpms.

Time

Press and release the TRIP switch to cycle through the odometer window displays to the time display. To set the time:

1. Turn the ignition switch to ACC or IGN.
2. See Speedometer/Odometer/Tachometer (Typical) and Instruments: FLSTSB. Press and release the TRIP switch until time (hour and minutes) is displayed. Press and hold the TRIP switch until 12HR begins to blink in the speedometer display window. Release the switch.
3. Press and release the TRIP switch once to advance to a blinking 24HR or military style time display. Each time you press and release the switch, the display will switch between 12HR and 24HR.
4. When the desired time style is displayed, press and hold the TRIP switch for until the hours display is blinking.
5. Press and release the TRIP switch repeatedly to advance the hours.
6. When the correct hour is displayed, press and hold the TRIP switch until the minutes display starts blinking.
7. Press and release the TRIP switch repeatedly to advance the minutes display.
8. When the correct minutes are displayed, press and hold the TRIP switch until the display advances to the selection of AM or PM.

   NOTE:

   AM or PM will not appear in the regular time display. The motorcycle uses the selection for diagnostic purposes.

9. In the 12HR display, AM or PM will appear flashing. Select AM or PM with the TRIP switch and press and hold the switch for five seconds.
10. Turn the ignition switch OFF.

Fuel Range

The fuel range display shows the approximate mileage available with the amount of fuel left in the fuel tank.

With the ignition switch in the ACC or IGN position, press the TRIP switch until fuel range is displayed, as indicated by the letter "R" in the left side of the display. The calculated remaining distance (miles or kilometers) to empty is displayed, based on the amount of fuel in tank. Range can be accessed at any time using the TRIP switch.

Low Fuel Warning

When the low fuel warning lamp illuminates, the fuel range feature will automatically be displayed in the odometer window. The rider can press the TRIP switch to return to the cycle of odometer displays. The fuel range warning will not be repeated until the ignition switch is cycled off and back on.

After the fuel range drops to 10 mi 16 km remaining, the fuel range display will scroll "LO RNG" to indicate that the motorcycle will shortly run out of fuel.

Resetting the low fuel warning lamp and range requires an ignition cycle change. Always turn the ignition switch to OFF when fueling.

Disable: To disable this function while riding, press and hold the TRIP switch while in the fuel range display mode. Automatic range pop-up feature will show that it is disabled by blinking twice.

Enable: To enable the automatic low fuel warning range display, press and hold the TRIP switch. The low fuel range will blink once when the automatic feature is enabled.

NOTE:

- *When the low fuel warning lamp turns on, the fuel level is low. Refuel as soon as possible.*
- *The range display is only updated when the vehicle is moving.*
- *The automatic fuel range display is enabled after the ignition is turned OFF-IGN.*

Tip Indicator

⚠WARNING

If tip occurs, check all controls for proper operation. Restricted control movement can adversely affect the performance of the brakes, clutch or ability to shift, which could result in loss of vehicle control and death or serious injury. (00350a)

Should motorcycle be tipped over, the word "tIP" will appear in the odometer window. The engine will not start until reset.

Reset: To reset, set the motorcycle upright and turn the ignition switch OFF-IGN.

No Fob Message

If the motorcycle is equipped with a security system and is driven off leaving the fob behind, 'NO FOB' will be displayed in the odometer window as soon as the motorcycle starts moving. The display will last for 10 seconds as a reminder to retrieve the fob.

With the motorcycle separated from its assigned fob, the motorcycle can only be started with a manual PIN entry to disarm the security system. See Arming and Disarming.

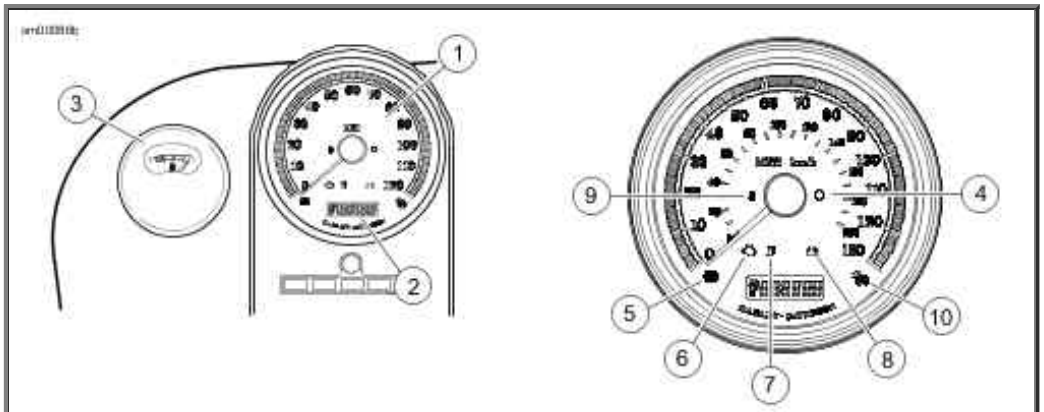

1. Speedometer
2. Odometer/tachometer
3. Fuel gauge
4. Electrical system lamp (security system)
5. ABS lamp
6. Check engine lamp
7. Low fuel warning lamp
8. Battery lamp
9. Sixth gear indicator
10. Cruise enabled lamp (not used)

Speedometer/Odometer/Tachometer (Typical)

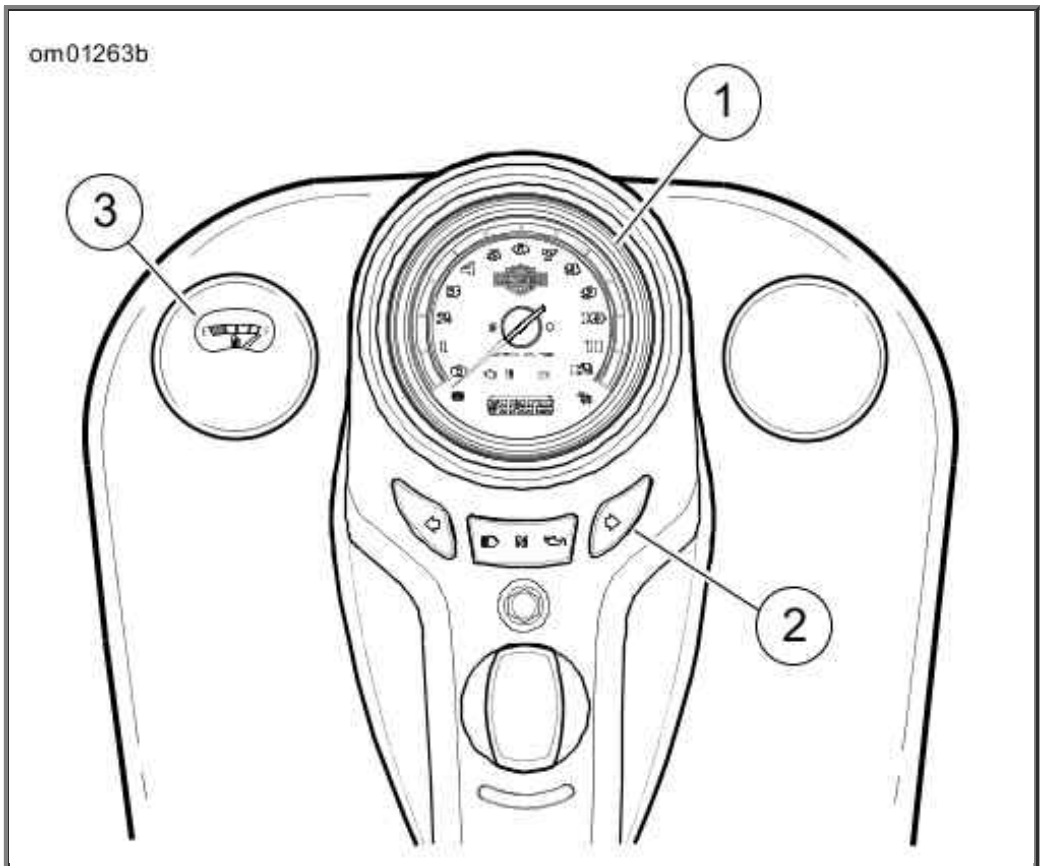

1. Speedometer (domestic shown)
2. Indicator lamps
3. Fuel gauge

Instruments: FLSTSB

Instrument Lamps

Check Engine Lamp

See Speedometer/Odometer/Tachometer (Typical). The check engine lamp (6) is located inside the instrument cluster. Its purpose is to indicate whether or not the engine/engine management system is operating normally. The check engine lamp color is amber.

The check engine lamp normally comes on when the ignition is first turned on and remains on for approximately 4 seconds, as the engine management system runs a series of self-diagnostics.

If the check engine lamp comes on at any other time, see a Harley-Davidson dealer.

Low Fuel Lamp

Solid: See Speedometer/Odometer/Tachometer (Typical). The amber low fuel warning lamp (7) illuminates when the gasoline in the tank reaches the low fuel level. Refer to Capacities.

Flashing: If the low fuel lamp flashes continuously, it indicates the presence of a fault in the fuel level circuitry. See a Harley-Davidson dealer.

Sixth Gear Lamp

See Speedometer/Odometer/Tachometer (Typical). The sixth gear lamp (9) indicates when the transmission is in sixth gear.

Battery Discharge Lamp

See Speedometer/Odometer/Tachometer (Typical). The battery lamp (7) indicates either overcharging or undercharging of the battery. Refer to Battery: General.

Electrical System Lamp

See Speedometer/Odometer/Tachometer (Typical). On motorcycles equipped with the security system, the electrical system lamp flashes when the security system is armed. Refer to Harley-Davidson Smart Security System.

If the electrical system lamp remains lit after the security system is disarmed, see a Harley-Davidson dealer.

ABS Lamp

Flashing: See Speedometer/Odometer/Tachometer (Typical). On ABS equipped models, the amber ABS indicator lamp (5) flashes when the ignition switch is turned to IGN to indicate that the system is operational. It continues to flash until motorcycle speed exceeds 3 mph 5 km/h .

Solid: Continuous illumination of the lamp indicates a malfunctioning ABS system. The ABS is disabled and the brakes are operating as if they were non-ABS brakes. See a Harley-Davidson dealer for service.

⚠WARNING

If ABS lamp remains on continuously, the ABS is not operating. The standard brake system is operational, but wheel lock up can occur. Contact a Harley-Davidson Dealer to have ABS repaired. A locked wheel will skid and can cause loss of vehicle control, which could result in death or serious injury. (00361a)

Indicator Lamps

See Indicator Lamps (Typical). Five indicator lamps are provided.

- The green TURN indicators will flash when turn signals are activated; therefore, flashing indicates the chosen turn direction. When the 4-way hazard flashers are operating, both turn indicators will flash simultaneously. If a turn indicator starts flashing at fast rate, one of the turn signal bulbs is not working.
- The blue BEAM indicator lamp, when lit, signals high beam headlamp operation. If the indicator does not illuminate after the HI switch has been pressed, the high beam lamp is inoperative.
- The green NEUTRAL lamp, when lit, signals the transmission is in neutral gear.
- The red OIL indicator lamp, when lit, signals that oil is not circulating through the engine.

NOTE:

The OIL indicator lamp will glow when the ignition is turned on prior to starting engine. With engine running, lamp should be off when engine speed is above idle.

Several other circumstances that could cause the red oil indicator lamp to signal, include the following:

- If the oil pressure indicator lamp does not go off at speeds above idling, it is usually because of an empty oil tank or diluted oil.
- In freezing weather the oil feed may clog with ice and sludge, preventing oil circulation.
- A grounded oil signal switch wire.
- A faulty signal switch.
- A damaged or improperly installed check valve.
- Trouble with the pump.

CAUTION

If the oil pressure indicator lamp remains lit, always check the oil supply first. If the oil supply is normal and the lamp is still lit, stop the engine at once and do not ride further until the trouble is located and the necessary repairs are made. Failure to do so may result in engine damage. (00157a)

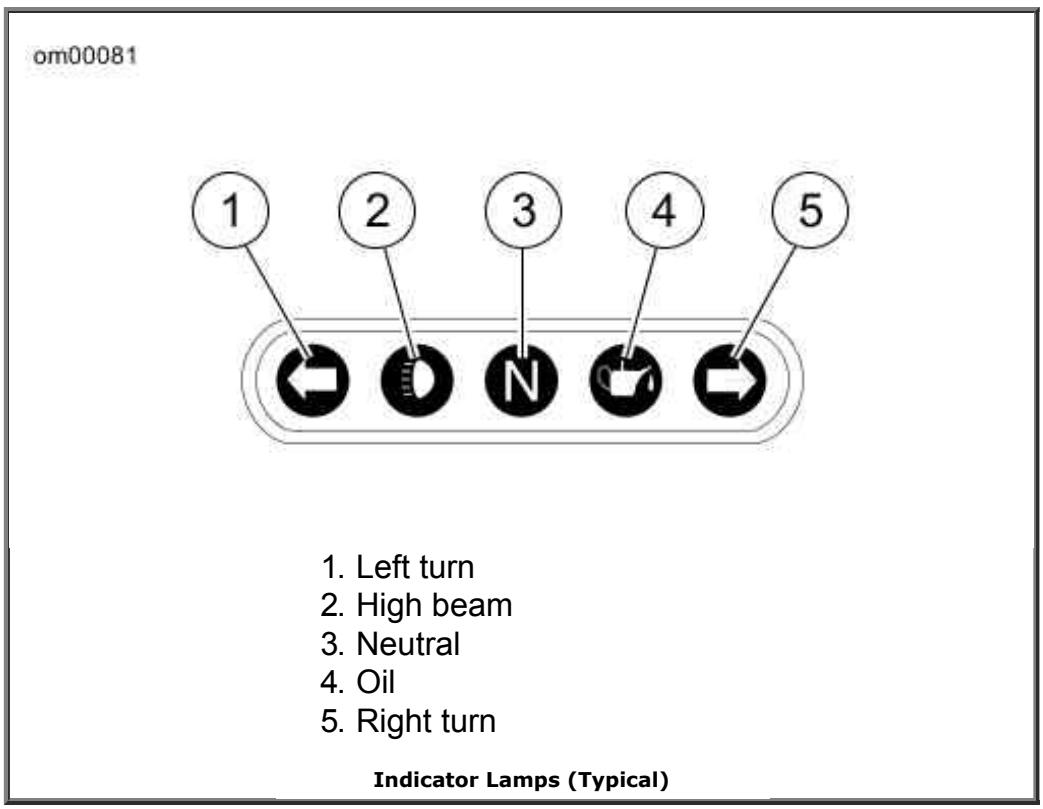

Indicator Lamps (Typical)

Gear Shift Lever

Location

See Shift Lever and Shift Pattern. The gear shift lever is located on the left side of the motorcycle and is operated with the left foot. The shift lever changes gears in a sequential six-

speed transmission.

Shift Pattern

CAUTION

The clutch must be fully disengaged before attempting a gear shift. Failure to fully disengage the clutch can result in equipment damage. (00182a)

See Shift Lever and Shift Pattern. Each gear must be engaged in sequence. Lift the gear shift lever to upshift and press the lever to downshift. After each gear change, release the gear shift lever to allow it to return to its resting position. See Shifting Gears.

Neutral

Neutral is located between first and second gear. The transmission can be shifted to neutral from either first or second gear. Lift or press the gear shift lever 1/2 of its stroke. In neutral, the indicator lamp will light.

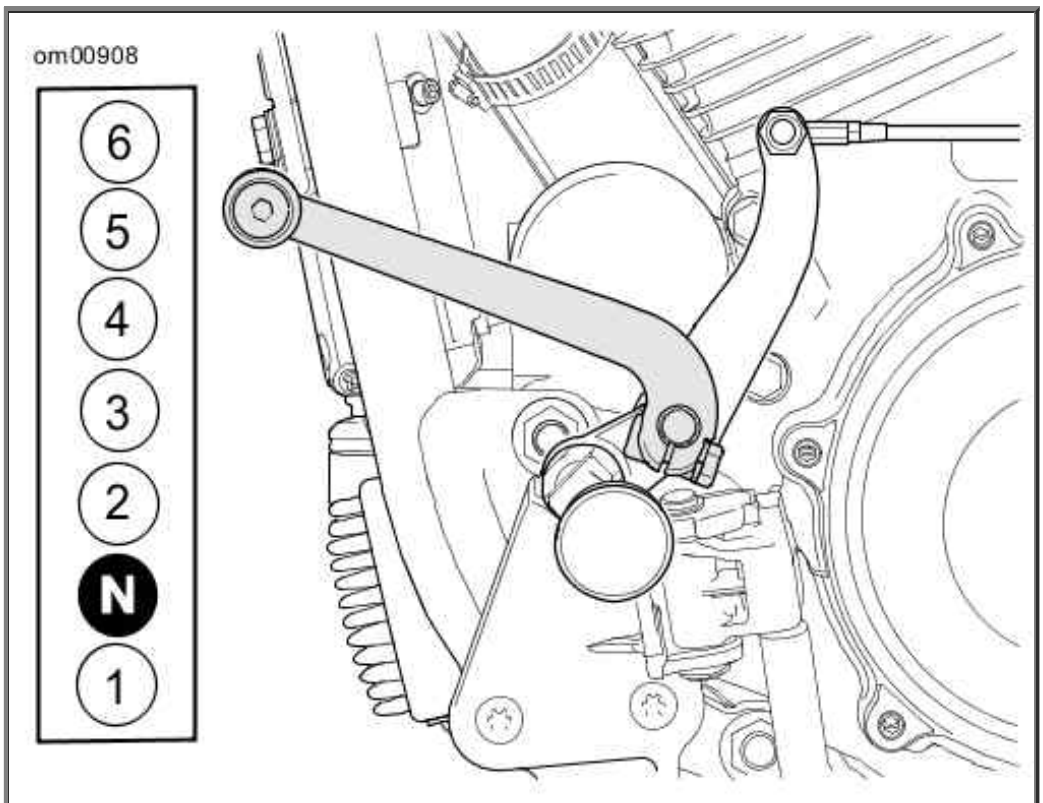

Shift Lever and Shift Pattern

Heel-Toe Foot Shifter

See Heel-Toe Foot Shift Lever. Some motorcycles have a heel-toe shifter lever. With this shift lever, upshifts can be made with the heel of the left foot. Downshifts can be made with the toe.

- Pushing toe shift lever all the way down (full stroke) shifts the transmission to the next lower gear.

- Lifting the toe shift lever all the way up (full stroke) shifts the transmission into the next higher gear.
- Pushing the heel shift lever all the way down (full stroke) shifts the transmission to the next higher gear.

Release the foot shift lever after each gear change to allow the lever to return to its center position before another gear change.

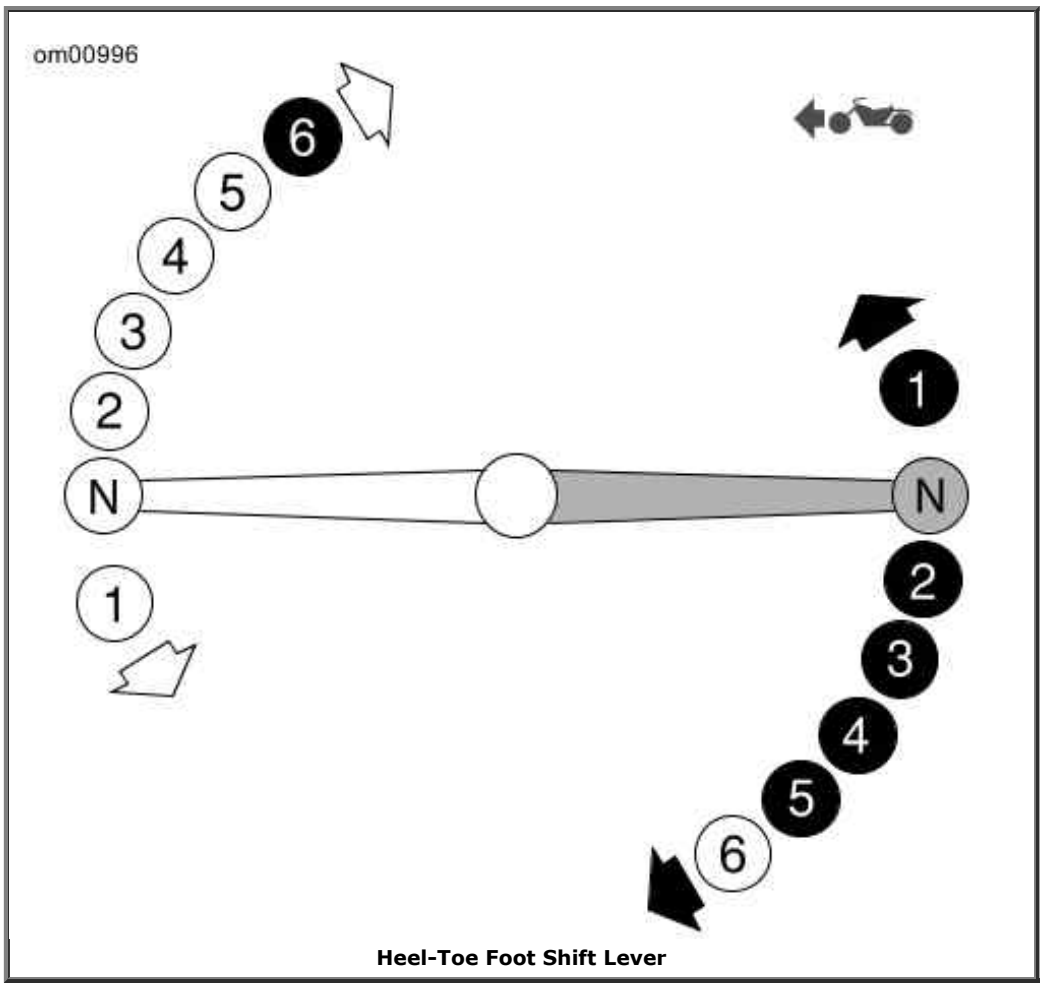

Heel-Toe Foot Shift Lever

Anti-Lock Brake System (ABS)

Identification

See Hydraulic Control Unit. Models that are equipped with the ABS option can be identified by the presence of a hydraulic control unit as shown.

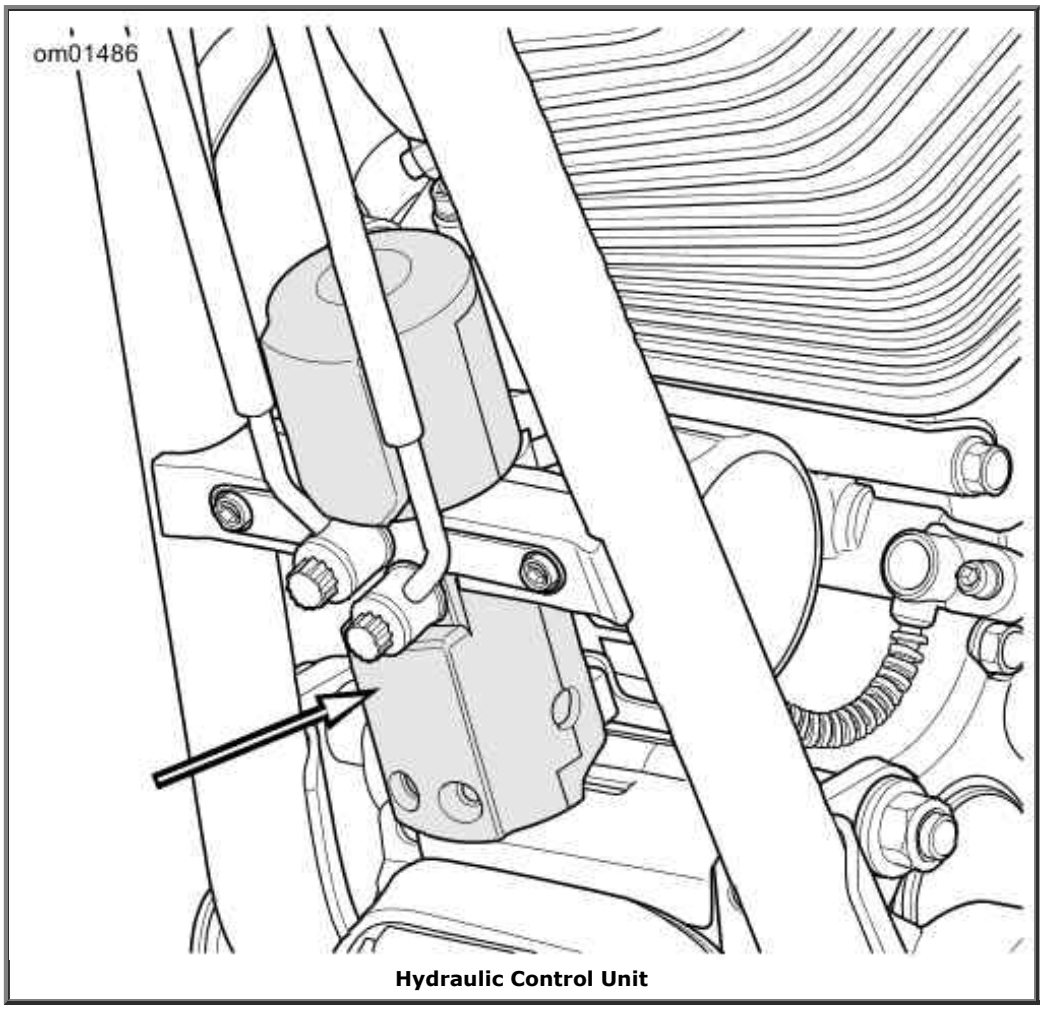

Hydraulic Control Unit

Brake System

General

The rear brake pedal controls the rear wheel brake and is located on the motorcycle's right side. Operate the rear brake pedal with the right foot.

The front brake hand lever controls the front wheel brake and is located on the right handlebar. Operate the hand lever with the fingers of the right hand.

⚠WARNING

Do not position fingers between hand control lever and handlebar grip. Improper hand positioning can impair control lever operation and cause loss of vehicle control, which could result in death or serious injury. (00032a)

Some models are equipped with an anti-lock braking system.

Non-ABS Brake System

Apply brakes uniformly and evenly to prevent wheels from locking. Use front and rear brakes equally for best results.

⚠WARNING

Do not apply brake strongly enough to lock the wheel. A locked wheel will skid and can cause loss of vehicle control, which could result in death or serious injury. (00053a)

Anti-Lock Brake System (ABS)

Harley-Davidson's Anti-Lock Brake System assists the rider in maintaining control when braking in a straight-line emergency situation. ABS operates independently on front and rear brakes to keep the wheels rolling and prevent uncontrolled wheel lock-ups either on dry pavement or on slick surfaces such as gravel, leaves or when riding in wet conditions.

ABS: How It Works

The ABS monitors sensors at the front and rear wheels to determine wheel speed. If the system detects one or both wheels are slowing down too quickly, which indicates they are close to locking, or if the deceleration rate does not match a criteria stored in memory, the ABS reacts. The system rapidly opens and closes valves to modulate the brake caliper pressure utilizing only the brake lever/pedal pressure being applied by the rider. During ABS activation, the system provides the electronic equivalent of manually pumping the brakes and is capable of cycling up to seven times per second.

The rider will recognize ABS activation by the slight pulsing sensation in the hand lever or the rear brake pedal. The pulsing sensation may also be accompanied by a clicking sound from the ABS module. Both are the result of normal operation. Refer to ABS Symptoms and Conditions.

ABS: How To Use

While an advantage in emergency braking, ABS is not a substitute for safe riding. The safest way to stop a motorcycle is upright with both wheels straight.

Harley-Davidson ABS is a manual assist system. When in an emergency stopping situation, maintain pressure on the brakes through all ABS events. Do not modulate or "pump" the brake controls. The wheels won't lock until the end of the stop when motorcycle speed reaches approximately 4 mph 6 km/h and ABS is no longer needed.

⚠WARNING

ABS cannot prevent lockup of rear wheel due to engine braking. ABS will not aid in cornering or on loose/uneven surfaces. A locked wheel will skid and can cause loss of vehicle control, which could result in death or serious injury. (00362a)

More information is available at www.harley-davidson.com/abs.

ABS: Tires and Wheels

ABS motorcycles must always use tires and wheels that are the same as the original equipment. The ABS monitors the rotational speed of the wheels through individual wheel speed sensors. Changing to different diameter wheels or different sized tires can alter the rotational speed. This can upset the calibration of the ABS and have an adverse effect on its ability to detect and prevent uncontrolled wheel lockups. Tire inflation pressure that is significantly low also can have an adverse effect.

ABS Symptoms and Conditions

SYMPTOM	CONDITION
Pulsing brake lever or pedal during an ABS event	Normal condition.
Clicking sound during an ABS event	Normal condition.
ABS lamp flashing	Normal condition - motorcycle turned on - speed under 3 mph 5 km/h .
Perceived "surge" while braking	Normal condition - most noticeable when braking with one brake (front only or rear only). Result of a reduction in deceleration which can be caused by cracks or bumps in road, engine braking (high engine RPMs causing the rear wheel to slow down), hard braking at slow speeds, and other conditions. This is due to ABS modulating caliper brake pressure to prevent uncontrolled wheel lock.
Temporarily stiff rear brake pedal	Normal condition - engine braking (high engine RPMs causing the rear wheel to slow down) or down shifting can activate ABS. If applying the rear brake at the same time or immediately after, the ABS may be closing a valve to prevent pressure to the rear brake. This is due to ABS modulating caliper brake pressure to prevent uncontrolled wheel lock.
Tire chirp	Normal condition - depending on surface, tire can chirp without locking the wheel.
Black mark on pavement	Normal condition - depending on surface, tire can leave a black mark without locking the wheel.
Wheel lock at low speed	Normal condition - ABS will not activate on front wheel below 3 mph 5 km/h or on rear wheel below 5 mph 8 km/h .

Jiffy Stand

⚠WARNING

Always park motorcycle on a level, firm surface. An unbalanced motorcycle can fall over, which could result in

death or serious injury. (00039a)

The jiffy stand is located on the left side of the motorcycle and swings outward to support the motorcycle for parking.

⚠WARNING

The jiffy stand locks when placed in the full forward (down) position with vehicle weight on it. If the jiffy stand is not in the full forward (down) position with vehicle weight on it, the vehicle can fall over which could result in death or serious injury. (00006a)

⚠WARNING

Be sure jiffy stand is fully retracted before riding. If jiffy stand is not fully retracted, it can contact the road surface causing a loss of vehicle control, which could result in death or serious injury. (00007a)

Jiffy Stand Interlock: International Models

Some international models are equipped with a jiffy stand interlock feature.

The vehicle will start and run with the jiffy stand down while the transmission is in neutral. If the jiffy stand is down, the transmission is in gear, and the clutch is released, the vehicle will stall. The message "SidE StAnd" will scroll across the odometer to indicate this to the rider. Raising the jiffy stand (or putting the transmission in neutral) will permit the engine to run and clear the message.

If the jiffy stand falls out of the fully retracted position while riding at speeds greater than 10 mph 15 km/h , then the jiffy stand interlock system will maintain engine operation and alert the rider about this by illuminating the indicators (flash twice) and scroll the message "SidE StAnd" across the odometer. The message will remain until the system detects the jiffy stand in the fully retracted position again. The rider may continue to operate the vehicle while in this mode.

The rider may clear the text messages at any time by pressing the TRIP switch once while the vehicle is powered up.

Rear View Mirrors

⚠WARNING

Objects in mirrors are closer than they appear. Use caution when judging distance of objects in mirrors. Failure to judge correct distances could result in death or serious injury. (00033a)

Your vehicle is equipped with two convex rear view mirrors.

This type of mirror is designed to give a much wider view to the rear than a flat mirror. However, cars and other objects seen in this type of mirror will look smaller and farther away than they

actually are.

- Use caution when judging the size or relative distance of objects seen in rear view mirrors.
- Always adjust the rear view mirrors to clearly reflect the area behind the motorcycle before riding.

NOTE:

Adjust mirrors so you can see a small portion of your shoulders in each mirror. This will help you establish the relative distance of vehicles to the rear of your motorcycle.

Fuel Filler Cap

⚠WARNING

Avoid spills. Slowly remove filler cap. Do not fill above bottom of filler neck insert, leaving air space for fuel expansion. Secure filler cap after refueling. Gasoline is extremely flammable and highly explosive, which could result in death or serious injury. (00028a)

See Fuel Tank: Softail Models. To open, turn fuel filler cap counterclockwise and lift up. To close, turn fuel filler cap clockwise until it clicks. The ratchet action of the cap prevents overtightening.

NOTES:

- *Fuel filler cap turns approximately a three-quarter turn before it begins to loosen.*
- *Softail model fuel filler caps are located on the right side of the fuel tank. The cap on the left side is the fuel gauge and is NOT removable.*

See SAFE OPERATING RULES section and review safety procedures listed below.

⚠WARNING

Do not store motorcycle with gasoline in tank within the home or garage where open flames, pilot lights, sparks or electric motors are present. Gasoline is extremely flammable and highly explosive, which could result in death or serious injury. (00003a)

⚠WARNING

Do not use aftermarket fuel caps. Aftermarket fuel caps may fit improperly and leak, which could lead to death or serious injury. See a Harley-Davidson dealer for approved fuel caps. (00034a)

CAUTION

Do not spill fuel onto the motorcycle while refueling. Immediately wipe up fuel spills on your motorcycle. Fuel can cause damage to cosmetic surfaces. (00147b)

CAUTION

Use only unleaded fuel in catalytic converter-equipped motorcycles. Using leaded fuel will damage the emission control system. (00150b)

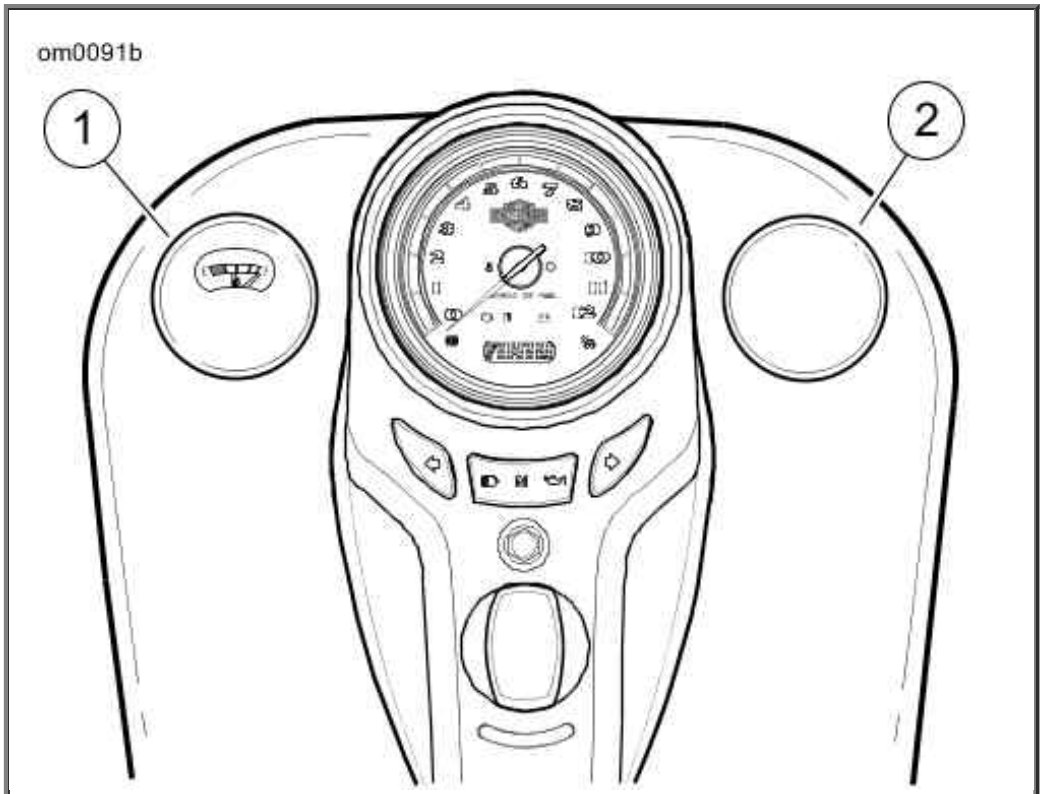

1. Fuel gauge
2. Fuel filler cap

Fuel Tank: Softail Models

Fork Lock

CAUTION

Protect your vehicle against theft. Failure to lock the motorcycle after parking could result in theft and/or equipment damage. (00151b)

⚠WARNING

Do not operate vehicle with forks locked. Locking the forks restricts the vehicle's turning ability, which could result in death or serious injury. (00035a)

See Fork Lock. The fork lock is incorporated in the steering head on the right side.

Using the fork lock immediately after parking your motorcycle will discourage unauthorized use or theft when parking your motorcycle.

To Lock Fork

1. Turn fork to full left position.
2. Insert key into fork lock.
3. Push in on fork lock and turn to left position.
4. Remove key.

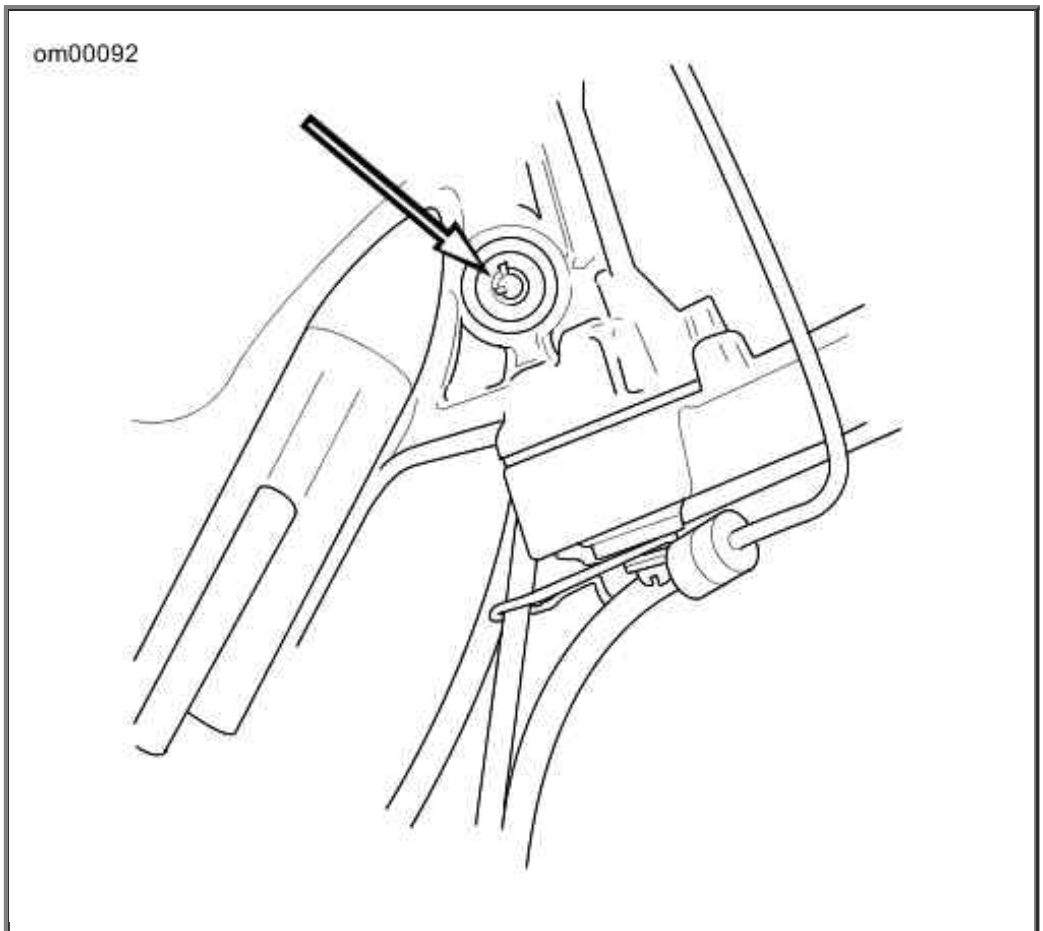

Fork Lock

Shock Absorbers

Calculate Number of Turns

Softail models feature adjustable rear shock absorbers which are located under the motorcycle. The rear shock spring preload is adjusted to the total load or may be varied to suit your own personal comfort.

1. Identify the number of preload turns for the weight of the rider.
    a. **FLSTC, FLSTF, FXST:** Refer to Shock Preload: FLSTC, FLSTF and FXST.
    b. **FXS, FLSTFB, FLSTN, FLSTSB:** Refer to Shock Preload: FXS, FLSTFB, FLSTSB and FLSTN.
    c. **FXCWC:** Refer to Shock Preload: FXCWC.

2. Calculate the number of turns for the intended passenger and cargo.

3. Add the number of turns for the rider to the number of additional turns required for the total weight of the passenger and/or cargo.

Shock Preload: FLSTC, FLSTF and FXST

RIDER WEIGHT*		TURNS**
lb	kg	
Less than 165	75	0
165-220	75-100	1
220-275	100-125	2
275-335	175-152	3
335-395	152-179	4
Greater than 395	179	5
***Passenger/Cargo:** For every 40 lb 18.1 kg increase preload one turn. **Turns out (counterclockwise) from minimum preload.		

Shock Preload: FXS, FLSTFB, FLSTSB and FLSTN

RIDER WEIGHT*		TURNS**
lb	kg	
Less than 185	84	0
185-235	84-107	1
235-285	100-129	2
285-340	129-154	3
Greater than 340	154	4
***Passenger/Cargo:** For every 35 lb 15.8 kg increase preload one turn. **Turns out (counterclockwise) from minimum preload.		

Shock Preload: FXCWC

RIDER WEIGHT*		TURNS**
lb	kg	
Less than 150	68	0
150-195	68-88	1
195-240	88-109	2
240-290	109-132	3
290-340	132-154	4
Greater than 340	154	5
***Passenger/Cargo:** For every 35 lb 15.8 kg increase		

Passenger/Cargo: For every 33 lb (15.0 kg) increase preload one turn. **Turns out (counterclockwise) from minimum preload.

Adjustment

NOTES:

- *Adjust the shocks with the motorcycle resting on the jiffy stand.*
- *Adjust both shocks the same number of turns.*

1. See Shock Absorber Adjustment. Hold the shaft with a wrench on the flats of the shock shaft and loosen the jamnut (1) with the SHOCK ADJUSTMENT SPANNER 94448-82B .
2. Use the tangs of the spanner in the holes (2) in the spring canister to turn the canister clockwise until it stops. This is the minimum preload position.
3. Mark the face of the canister for reference.
4. Turn the canister counterclockwise the number of turns calculated for the total load.
5. Tighten the jamnut.

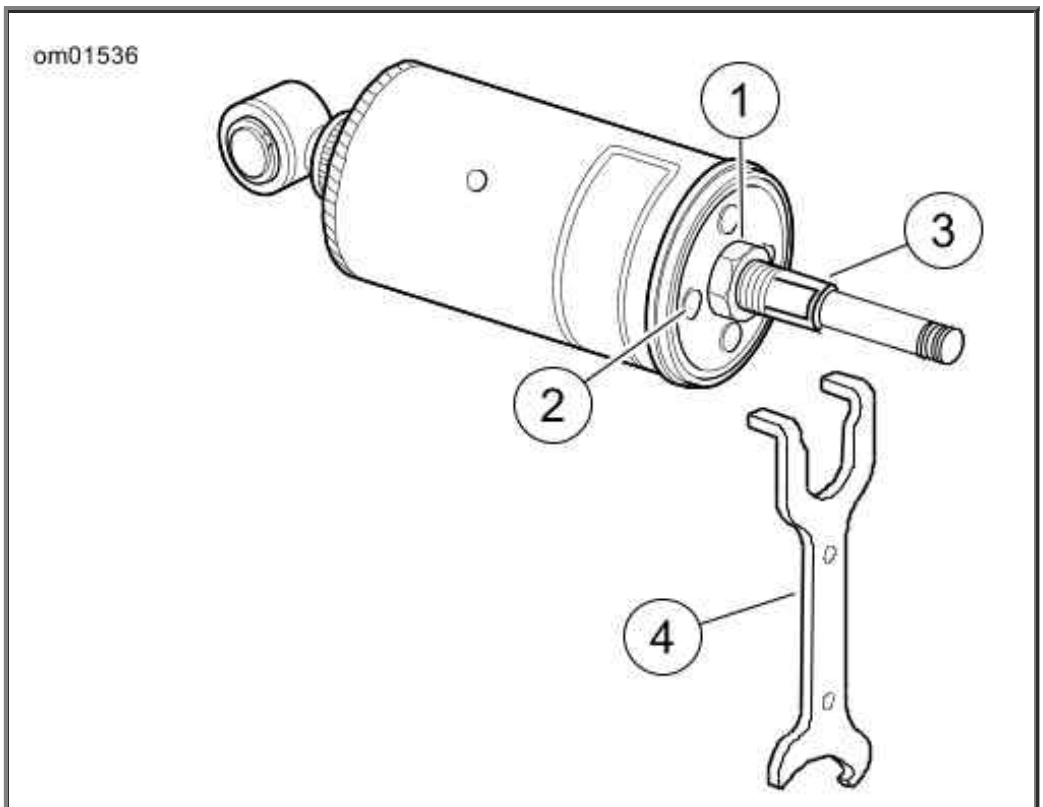

1. Jamnut
2. Holes for spanner
3. Flat
4. Spanner wrench

Shock Absorber Adjustment

Saddlebags: FLSTC Models

⚠WARNING

See the Accessory and Cargo section in your Owner's Manual. Improper loading of cargo or installation of accessories can affect motorcycle stability and handling, which could result in death or serious injury. (00021a)

CAUTION

Check that saddlebag frame(s) are fully seated and tightly secured with mounting hardware. Failure to do so could result in the saddlebags becoming detached and/or damaged. (00171b)

Removal

1. See Saddlebag Assembly: FLSTC Shown. Unbuckle the saddlebag straps.
2. Use one hand to support the saddlebag and another hand to remove the flanged locknuts from the saddlebag mounting bracket.
3. Remove flanged locknuts, washers, acorn nuts and the saddlebag from the fender support.

Installation

1. See Saddlebag Assembly: FLSTC Shown. Align the saddlebag with the mounting holes on the fender support.
2. Push the mounting studs, washers and flanged locknuts through the saddlebag mounting holes, saddlebag mounting bracket and fender support as shown.
3. Tighten fasteners to 120-144 in-lbs (13.6-16.3 Nm).
4. Buckle saddlebag straps.

⚠WARNING

Do not allow passenger to use saddlebags as grab handles. Failure to use a grab strap, designed for passengers to hold onto when riding, could result in death or serious injury. (00081a)

For proper saddlebag maintenance, see Leather Care.

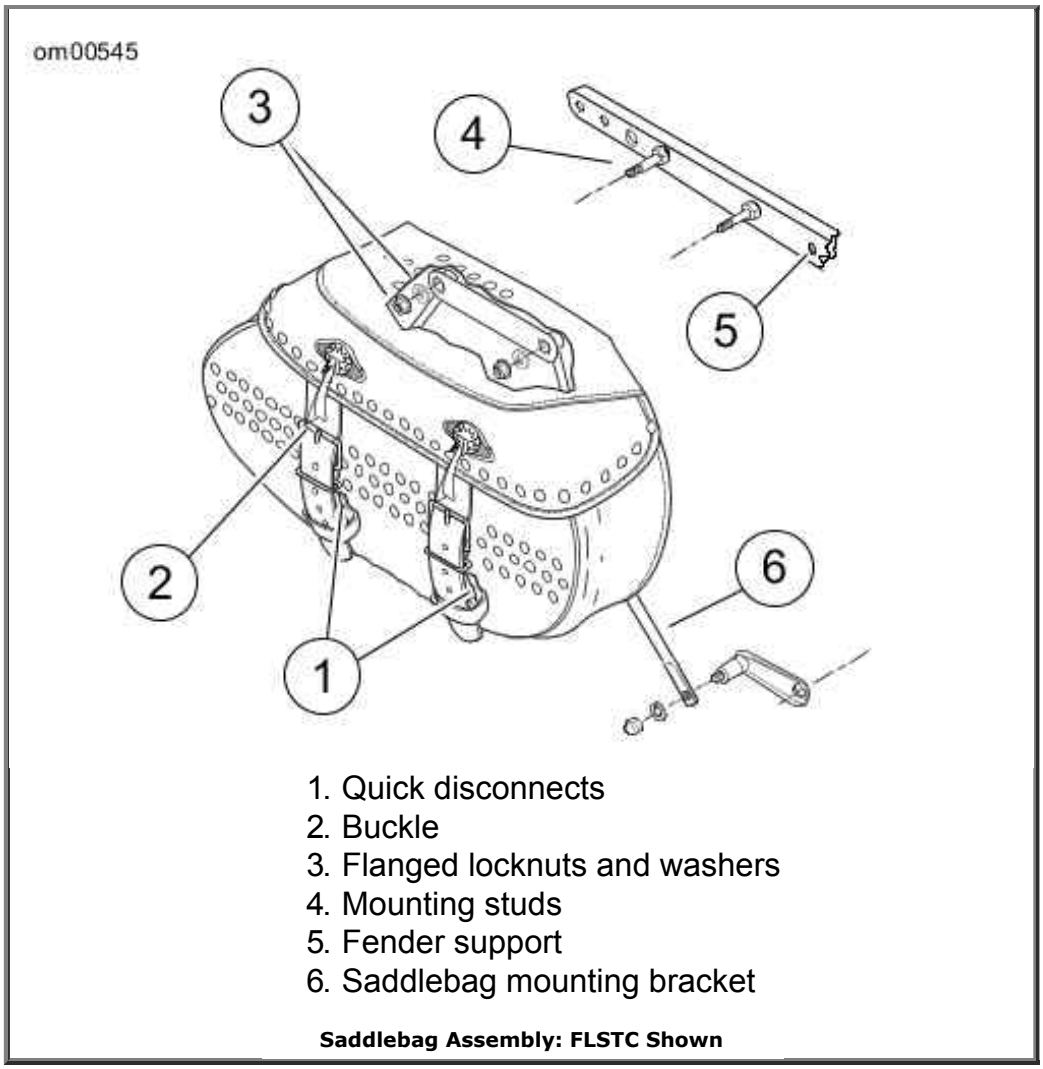

Saddlebag Assembly: FLSTC Shown

Saddlebag Operation

Opening

See Saddlebag Quick Disconnect. Some saddlebags have a quick disconnect feature. To use the quick disconnect strap feature:

1. Lift up the strap end to expose the quick release buckle.
2. Press on the lock tabs as shown.

NOTE:

The straps may also be opened and closed using the buckle in a conventional manner.

Closing

1. Insert the male strap end into the receptacle on the bag.
2. Push until a positive click is felt.

CAUTION

Check that saddlebag frame(s) are fully seated and tightly

Check that saddlebag frame(s) are fully seated and tightly secured with mounting hardware. Failure to do so could result in the saddlebags becoming detached and/or damaged. (00171b)

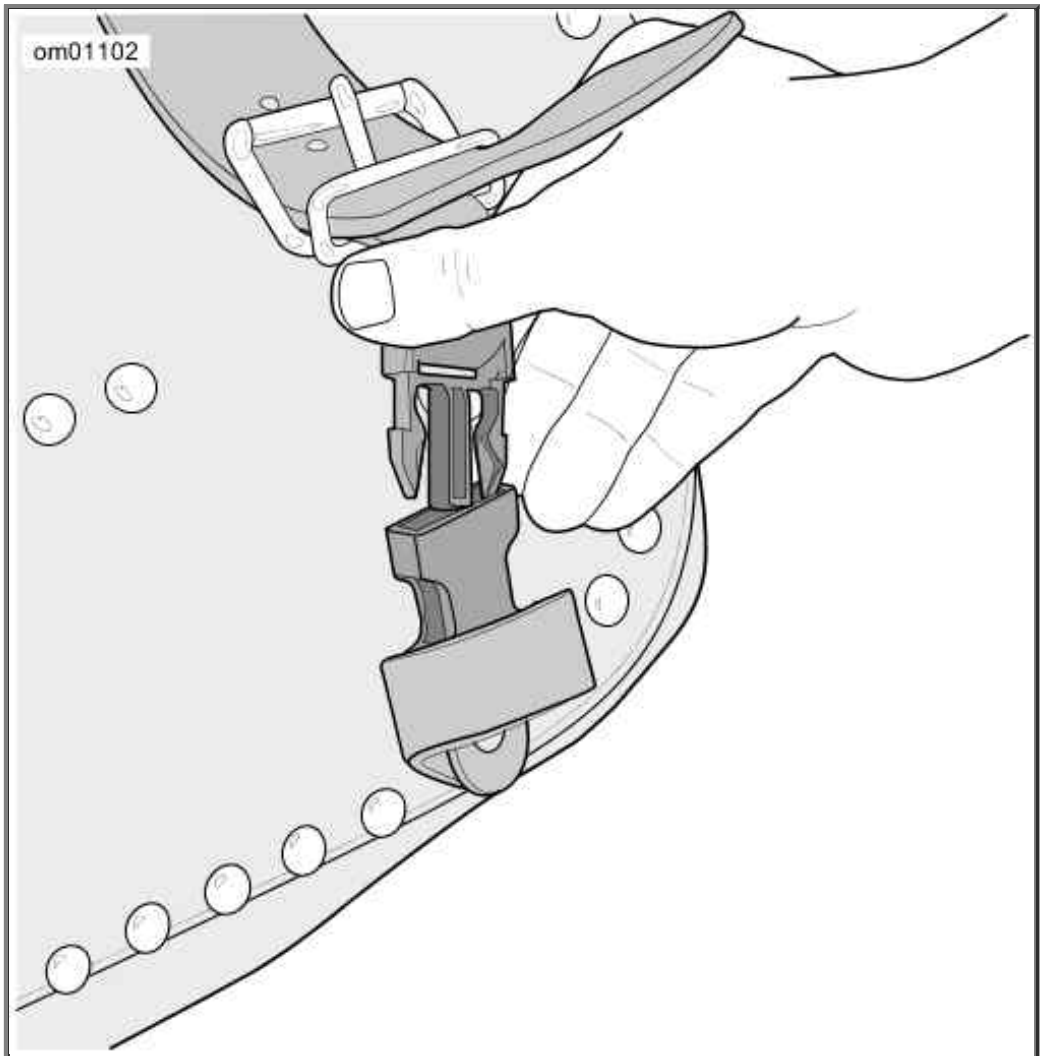

Saddlebag Quick Disconnect

Windshield: FLSTC Models

Removal

1. See Windshield Assembly. Insert your fingers into the wireform latch springs at either side of the windshield and move the TOP of the windshield assembly forward, until the TOP bracket notches slide away from the grommets.
2. Carefully lift the windshield bracket BOTTOM notches off the bottom grommets. Remove windshield.

Installation

1. See Windshield Assembly. Insert your fingers into the wireform latch springs at either side of the windshield and slide the BOTTOM windshield bracket notches onto the bottom grommets.

2. Slide the TOP bracket notches onto the top grommets.

NOTE:

For proper windshield maintenance, see Windshield Care.

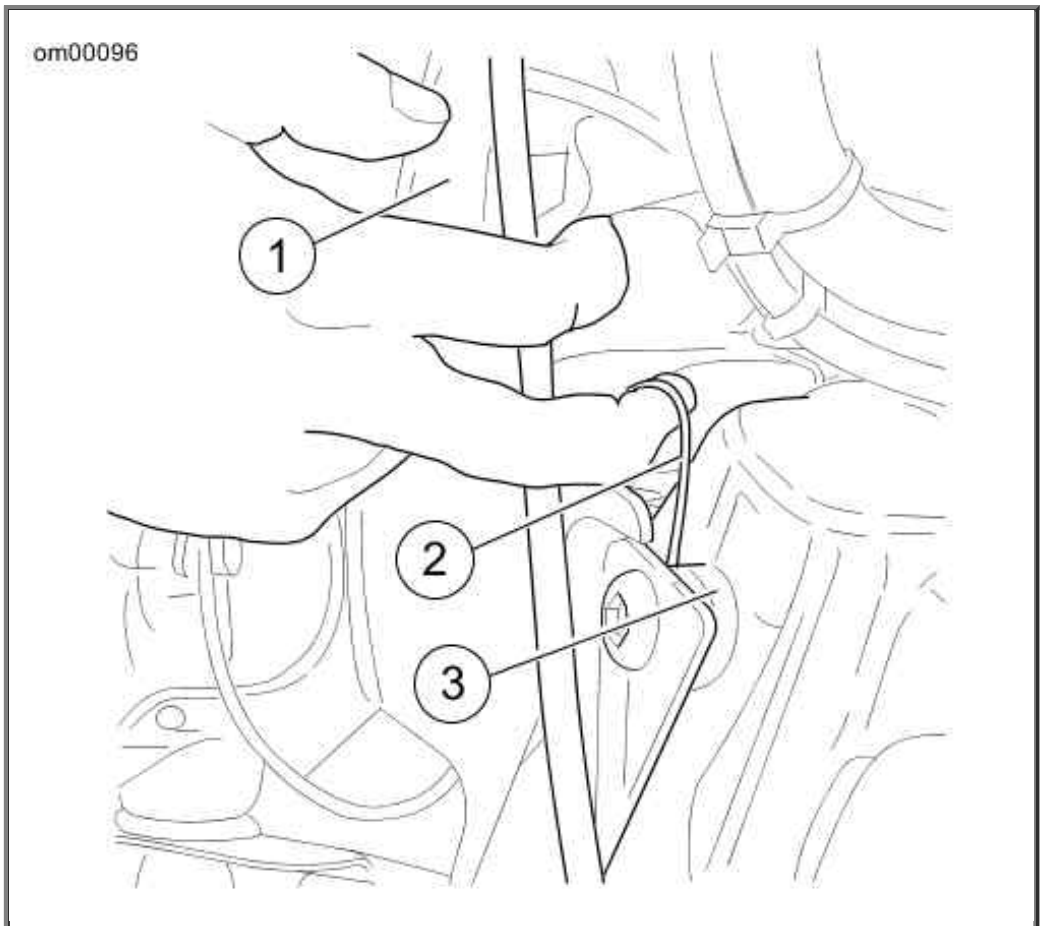

1. Windshield
2. Wireform latch spring
3. Grommet

Windshield Assembly

Auxiliary Lamps: FLSTC/FLSTN Models

See Auxiliary Lamp Switch. Use the auxiliary lamp switch to turn on the auxiliary lamps as required.

NOTES:

- *The auxiliary lamp switch is on the left, inside of the triple clamp shroud.*
- *The auxiliary lamps turn off when the headlamp is on high beam.*
- *Refer to service manual for alignment procedure.*

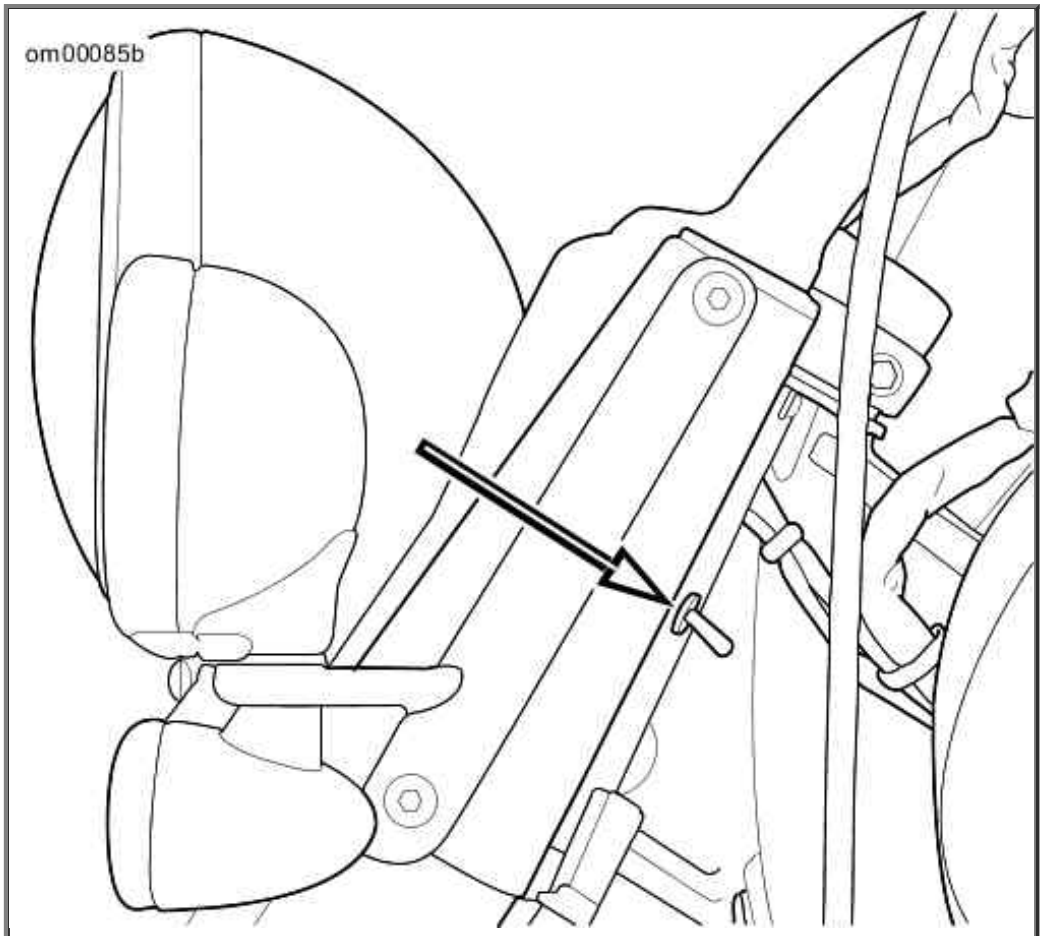

Auxiliary Lamp Switch

Harley-Davidson Smart Security System

Harley-Davidson Smart Security System

Components

The Harley-Davidson Smart Security System (H-DSSS) consists of a control module, a hands-free antenna mounted on the motorcycle and a hands-free fob **carried** by the rider/passenger.

After parking the motorcycle, turn the ignition to OFF or ACC and the security system will automatically **arm** within five seconds. While armed, the starter and ignition are disabled and the rider may leave the motorcycle knowing that the module will disable the ignition if someone tampers with the ignition switch or activate an alarm if someone attempts to move the motorcycle.

If the fob is present, the module will automatically **disarm** when the ignition is turned to IGN or ACC.

Options

Several options are available for the Harley-Davidson Smart Security System from the Harley-Davidson Genuine Motor Accessories and Motor Parts catalog. Options include:

- Smart Siren and Smart Siren II.
- Security Pager and Security Pager Receiver II.

- Replacement Fobs.

See a Harley-Davidson dealer for details.

FCC Regulations

FCC ID: L2C0027TR IC ID: 3432A-0027TR

FCC ID: L2C0028TR IC ID: 3432A-0028TR

This device complies with Part 15 of the FCC Rules and with RSS-210 of Industry Canada rules. Operation is subject to the following two conditions:

(1) This device may not cause harmful interference, and (2) This device must accept any interference received, including interference that may cause undesired operation.

NOTE:

Changes or modifications not expressively approved by the party responsible for compliance could void the user's authority to operate the equipment.

The term "IC:" before the radio certification number only signifies that Industry Canada technical specifications were met.

Security System Fob

Fob Assignment

See Fob: Smart Security System. Fobs are electronically assigned to the Harley-Davidson Smart Security System by a Harley-Davidson dealer so that the motorcycle can recognize a fob's unique signal. Only two fobs can be assigned at any one time.

Replacement fobs can be purchased from a dealership but can only be assigned to the motorcycle by a trained Harley-Davidson technician.

NOTES:

- *The reusable label found on the fob packaging lists the serial number of the fob. For reference, affix the label to a blank "NOTES" page in this Owner's Manual.*
- *The serial number of the fob is also found on the inside of the fob. See Fob Battery.*
- *The module will arm only if the fob has been assigned by a Harley-Davidson dealer and a Personal Identification Number (PIN) has been entered in the system. The PIN should be recorded on the Personal Information page in the front of this Owner's Manual and on the removable wallet card.*
- *Should the rider misplace the fob or if the fob fails, the rider can refer to the wallet card and use the PIN to manually disarm the system. Refer to Arming and Disarming and Troubleshooting.*
- *The PIN can easily be changed by the rider at any time. Refer to Personal Identification Number (PIN).*

Riding with a Fob

- Always carry the fob when riding, loading, fueling, moving, parking or servicing the

motorcycle. Carry the fob in a convenient pocket.

- Do not leave the fob attached to the handlebars or store the fob in a luggage compartment. Unintentionally leaving the fob with the motorcycle when it is parked prevents the system from disabling the ignition and activating the alarm. If the ignition switched is unlocked, the ignition switch can be set to IGN and the engine started.
- Do not ride with the fob stored in a metal case or with the fob closer than 3.0 in 76 mm to a cell phone, PDA, display or other electronic device. Any electromagnetic interference may prevent the fob from disarming the system.
- For added security, always lock the fork and remove the key when parked. If the fob is within range and the motorcycle is unlocked, tampering with the motorcycle will not activate the alarm.

Riding without a Fob

If the motorcycle is ridden off without the fob, the odometer window will display "No Fob" after five seconds at any speed above 5 mph 8 km/h . If the motorcycle is stopped and the ignition turned to OFF, it will require a PIN entry to disarm the security system and restart the motorcycle.

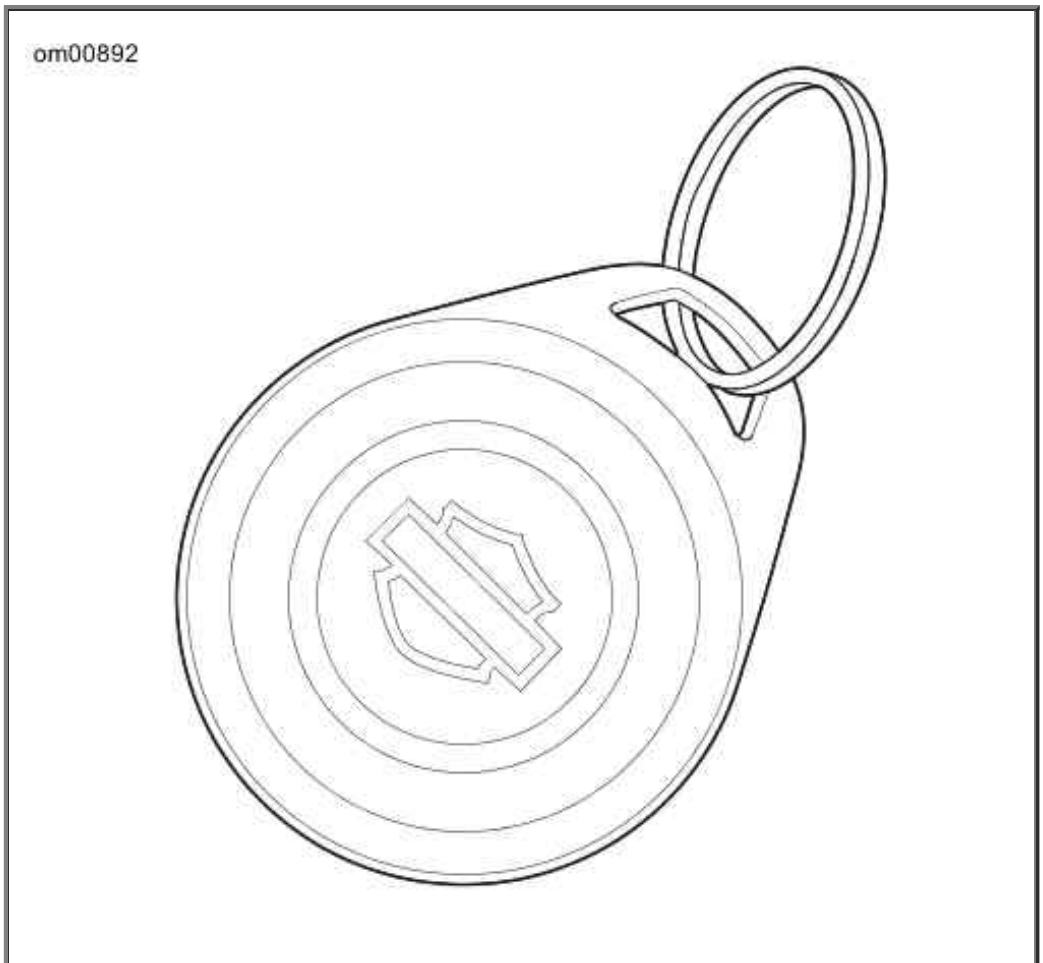

Fob: Smart Security System

Personal Identification Number (PIN)

The Personal Identification Number (PIN) is a number that can be used to disarm the security system in case an assigned fob is misplaced, fails or if the fob cannot communicate with the motorcycle because of electromagnetic interference.

A PIN is a five-digit number (1-9, no zeros).

Changing the PIN

To maintain security, the rider can change the PIN at any time. Refer to Changing the PIN.

Changing the PIN

STEP NO.	ACTION	WAIT FOR CONFIRMATION	NOTES
1	Select a 5-digit (1 thru 9) PIN and record on the wallet card from Owner's Manual.		
2	With an assigned fob present, turn the OFF/RUN switch to **OFF**.		
3	Turn the ignition switch to **IGN**.		
4	Cycle the OFF/RUN switch twice: **RUN - OFF - RUN - OFF - RUN**.		
5	Press **left** turn signal switch **2 times**.	ENTER PIN will scroll through the odometer window.	
6	Press **right** turn signal switch **1 time** and release.	Turn signals will flash 3 times. Current PIN will appear in odometer. The first digit will be flashing.	
7	Enter first digit of new PIN by pressing and releasing the **left** turn signal switch until the selected digit appears.		
8	Press **right** turn signal switch **1 time** and release.	The new digit will replace the current in odometer window.	
9	Enter second digit of selected PIN by pressing and releasing the **left** turn signal switch until the selected digit is present.		
10	Press **right** turn signal switch **1 time** and release.	The new digit will replace the current in odometer window.	
11	Enter third digit of the selected PIN by pressing and releasing the **left** turn signal switch until the selected digit is present.		
12	Press **right** turn switch **1 time** and release.	The new digit will replace the current in odometer window.	
13	Enter fourth digit of new PIN by pressing and releasing the **left** turn signal switch until the selected digit is present.		
14	Press **right** turn switch **1 time** and release.	The new digit will replace the current in odometer window.	

15	Enter fifth digit of the new PIN by pressing and releasing the **left** turn signal switch until the selected digit is present.		
16	Press **right** turn switch **1 time** and release.	The new digit will replace the current in odometer window.	
17	Turn the OFF/RUN switch **OFF**, then turn the ignition switch to **OFF**.		Pushing the OFF/RUN switch to **OFF** stores the new PIN in the module.

Security Status Indicator

See Speedometer/Odometer/Tachometer (Typical). The electrical system lamp in the speedometer face indicates the status of the Harley-Davidson Smart Security System.

- **Armed:** A lamp that blinks approximately every 3 seconds indicates that the system is armed.
- **Disarmed:** After the system disarms and the ignition is on, the lamp will remain illuminated for approximately four seconds and then turn off.
- **Service:** A lamp that remains illuminated longer than four seconds when the system is disarmed indicates that service of the module is required.

Arming and Disarming

Arming

When the motorcycle is parked and the ignition is turned to OFF or ACC, the security system arms automatically within five seconds if no motion is detected. Even when the fob is present, the system will arm.

On arming, the turn signals will flash twice and the optional siren will chirp twice if the siren is in the chirp mode. While armed, the indicator lamp in the speedometer face will flash every three seconds.

NOTE:

International Models: *The system must be in the chirp mode for the siren to chirp on arming or on disarming. See Siren Chirp Mode (Confirmation).*

Disarming

With the fob present, the rider may ride or move the motorcycle for parking, storage or service without setting off the alarm. Disarming is automatic as long as the fob is within range.

Fob: An armed security system is automatically disarmed when the fob is present and the motorcycle is moved or the ignition switch is turned to IGN or ACC.

When the system disarms, the optional siren will chirp once and the security indicator lamp will

illuminate for a solid four seconds and then turn off.

NOTE:

On any motion, like lifting the motorcycle up off of its jiffy stand or turning the ignition to ON, the system will electronically "poll" for the presence of the fob. If the fob is present, the system disarms.

Personal Identification Number (PIN): If the fob is misplaced or if the present fob fails to communicate, the system can be disarmed with the Personal Identification Number (PIN).

Disarming with a PIN

Disarm the security system manually using the PIN if the fob is lost, the fob battery is discharged or if where you parked there is a strong electromagnetic interference.

Do not turn handlebars, straddle seat or lift motorcycle off the jiffy stand. During a PIN disarm, if the security system detects motorcycle motion the system will activate the alarm.

Entering a PIN to Disarm Harley-Davidson Smart Security System

STEP NO.	ACTION	WAIT FOR CONFIRMATION	NOTES
1	If necessary, verify the current 5-digit PIN.		Should be recorded on wallet card.
2	Turn ignition to **IGN**.	If armed, the odometer window display will read: ENTER PIN and the security lamp will be flashing at a fast rate. The headlight will not be on.	
3	Press and release the left turn signal switch.	In the odometer window, a flashing 1 will appear.	
4	Increment the digit by tapping the left turn signal until the odometer window displays the first digit of the PIN.	The first digit in the odometer will be the first digit in the PIN.	
5	Press **right** turn switch **1 time.**	The first digit is stored and the next digit will flash.	Serves as enter key.
6	Increment the second digit using the left turn switch until the digit reaches the second digit of the PIN.	The second digit in the odometer will be the second digit in the PIN.	
7	Press right turn switch 1 time.	The second digit is stored and the next dash will flash.	Serves as enter key.
8	Increment the third digit using the left turn switch until it reaches the third digit of the PIN.	The third digit (**c**) in the odometer will be the third digit in the PIN.	
9	Press **right** turn switch **1 time**.	The third digit is stored and the next dash will flash.	Serves as enter key.
10	Increment the fourth digit using	The fourth digit (**d**) in the odometer will be	

10	Increment the fourth digit using the left turn switch until it reaches the fourth digit of the PIN.	The fourth digit (**d**) in the odometer will be the fourth digit in the PIN.	
11	Press **right** turn switch **1 time.**	The fourth digit is stored and the next dash will flash.	Serves as enter key.
12	Increment the fifth digit using the left turn switch until it reaches the fifth digit of the PIN.	The fifth digit (**e**) in the odometer will be the fifth digit in the PIN.	
13	Press **right** turn switch **1 time**.	The fifth digit is stored. The security system indicator lamp stops blinking.	Smart Security System is disarmed.

NOTES:

- *If a mistake is made while entering PIN, turn the ignition Switch to OFF before entering the last digit and then start the procedure from the beginning.*
- *If the procedure fails to disarm the security system, wait two minutes before attempting another PIN disarm.*
- *The security system will remain disarmed until the ignition is turned to OFF.*
- *At any time during a PIN disarm if the fob is brought within range of the motorcycle, the security system will disarm as the module receives the coded signal from the fob.*

Arming with Hazard Warning 4-Way Flashers On

If it should be necessary to leave a motorcycle parked along side a roadway, the hazard warning four-way flashers can be turned on and the security system armed.

1. Turn ignition to IGNITION.
2. Press the hazard warning triangle on the starter switch.
3. Turn the ignition to OFF to arm the security system.

To turn hazard warning flashers OFF, turn the ignition to IGN and press the hazard warning triangle switch on the starter switch.

Alarm

Ignition Disabled

When the fob is not present and the system is armed, if the ignition switch is turned to IGN or ACC, the security lamp will flash at a fast rate and the odometer window display will scroll "ENtER PIN". The headlamp will not turn on.

After approximately 10 seconds, if the system does not receive a left turn signal switch input, the display will go blank. The ignition system will remain disabled until the fob is present or the current PIN is entered.

Warnings

Once armed, if the motorcycle is moved or lifted up off of its jiffy stand and the fob is not present, the alarm will warn the operator with three alternate flashes of the turn signals and a chirp of the optional siren.

Within four seconds, if the motorcycle is back on its jiffy stand and no further motion is detected and/or the ignition is turned to OFF, the system will remain armed without activating the alarm.

If the motorcycle motion continues, the system will issue a second warning four seconds after the first.

NOTE:

During warnings and alarms, the starter motor and the ignition circuits are disabled.

The Alarm

If the security system is still detecting motion and/or if the ignition has not been turned back to OFF after a second warning, the system will activate the alarm.

When activated, the security system will:

- Alternately flash the four turn signals.
- Sound the optional siren.

Duration: The alarm will stop within 30 seconds and if no motion is detected, the alarm will not restart.

However, if motorcycle motion continues the system will repeat the 30 second alarm and recheck for motion. The alarm will repeat this 30 second alarm cycle for five minutes (10 cycles) or until the alarm is deactivated.

NOTE:

The alarm will also activate the LED, vibration or audible modes of a Harley-Davidson Security Pager. A pager can operate either in silent or in combination with an optional siren. The range of a pager can be up to 0.5 mi 0.8 km . See a Harley-Davidson dealer for details.

Deactivate the Alarm

Fob: Bring the fob to the motorcycle. After the system identifies that the fob is present, the system will terminate the alarm.

Siren Chirp Mode (Confirmation)

Chirp Mode

In chirp mode, the siren sounds two chirps when arming, and a single chirp when disarming.

Chirpless Mode

In chirpless mode, the siren does not chirp on arming or disarming.

The siren will still provide warning chirps and sound the alarm if the motorcycle is moved or the ignition switch is turned on without the fob present.

Switching Modes

Cycling quickly through three armings and disarmings will switch the system from one mode to the other.

1. With the fob present, turn the ignition switch to IGN.
2. When the security lamp turns off, turn the ignition switch to OFF.
3. When the security lamp turns off (but before the turn signals flash twice), immediately turn the ignition switch to IGN.
4. When the security lamp turns off, immediately turn the ignition switch to OFF.
5. When the security lamp turns off (but before the turn signals flash twice), immediately turn the ignition switch to IGN.
6. When the security lamp turns off, immediately turn the ignition switch to OFF.
7. When the security lamp turns off (but before the turn signals flash twice), immediately turn the ignition switch to IGN.

Transport Mode

When transporting the motorcycle, place the system in the Transport Mode. Otherwise, the alarm activated by motion detection can discharge the battery.

In the transport mode, the security system is armed without enabling the motion detector for one ignition cycle. This allows the vehicle to be picked up and moved in an armed state, however, any attempt to start the engine when the fob is not within range will trigger the alarm.

To Enter Transport Mode

1. With an assigned fob within range, turn the ignition switch to IGN.
2. Before the security system lamp goes out, turn the ignition switch to OFF.
3. Within three seconds, simultaneously press both the left and the right turn signal switches.
4. After the turn signals flash once, the system enters the transport mode. With the fob removed, the motorcycle can be moved without setting off the alarm.

To Exit Transport Mode

With the fob present, turn the ignition switch to IGN to disarm the system.

Long-Term Parking

To maintain arming, store the fob beyond the range (more than 20 feet 6 meters away) of the antenna. If the motorcycle is to be moved while parked, have the fob present.

If the motorcycle will not be operated for several months, such as during the winter season, refer to Motorcycle Storage.

Service Departments

When the motorcycle is to be left at a Harley-Davidson dealer, there are two options:

1. Leave an assigned fob with the dealer.
2. To maintain possession of the fob, ask the dealer to disable the system for service (service mode) before leaving the dealership.

Fob Battery

Replacing the Battery

Replace the fob battery every year.

1. See Fob Battery. Slowly turn a thin blade in the thumbnail slot (1) on the side of the fob to separate the two halves.
2. Remove the battery (2) and discard.

   NOTE:

   Dispose of the old battery in accordance with local regulations.

3. Install a **new** battery (Panasonic 2032 or equivalent) with the positive (+) side down.
4. Align the two halves of the fob and snap together.

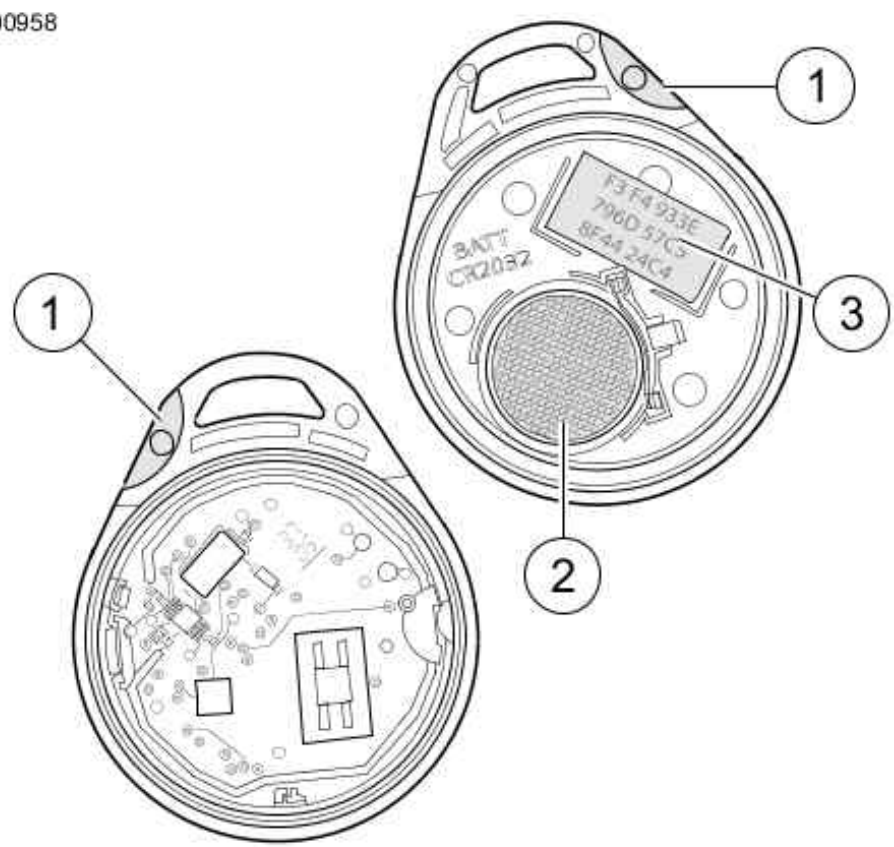

1. Thumbnail slot
2. Battery
3. Fob serial number

Fob Battery

Disconnecting Power

Optional Siren

When disconnecting the battery or removing the main fuse, perform the following steps to prevent the optional siren from sounding.

1. Verify that the fob is present.
2. Turn the ignition switch to IGNITION.
3. Pull the main fuse from its holder or disconnect the battery.

Troubleshooting

Security System Indicator

If the system indicator lamp stays illuminated while riding, see a Harley-Davidson dealer.

Fob

If the Smart Security System continues to actuate warnings and alarms with the fob present, one of the following can be the cause:

1. **Electromagnetic Interference:** Other electronic devices, power lines, or other electromagnetic sources can cause the Smart Security System to operate inconsistently.

   a. Verify that the fob is not in a metal enclosure or within 3.0 in 76 mm of any other electronic devices.

   b. Place the fob on the seat and turn the ignition to IGN. After the system disarms, return the fob to a convenient location.

   c. Move motorcycle at least 15 ft 5 m from the spot of interference.

   NOTE:

   Leaving a fob next to a computer monitor can run down the battery.

2. **Discharged Fob Battery:** Use the PIN to disarm the system. Replace the battery. Refer to Fob Battery.

3. **A Damaged Fob:** Use the PIN to disarm the motorcycle. Replacement fobs are available for purchase from a Harley-Davidson dealer.

Siren

- If the siren does not chirp two or three times on a valid arming command from the security module, the siren is either in the Chirpless Mode, not connected, not working, or the siren wiring was opened or shorted while the siren was disarmed.
- If the siren is armed and the internal siren battery is dead, shorted, disconnected, or has been charging for a period longer than 24 hours, the siren will respond with three chirps on arming instead of two.
- The internal siren battery may not charge if the vehicle's battery is less than 12.5 volts.
- If the siren enters the self-driven mode where it is powered from the siren's internal 9 volt battery, the turn signal lamps may or may not alternately flash. If the security module activates the siren, the turn signal lamps will alternately flash. If the siren has been armed and a security event occurs, and the siren is in self-driven mode, the siren will alarm for 20-30 seconds and then turn off for 5-10 seconds. This alarm cycle will be repeated ten times if the siren is in the self-driven mode.

Operation

Operating Recommendations

⚠WARNING

Motorcycles are different from other vehicles. They operate, steer, handle and brake differently. Unskilled or improper use could result in loss of control, death or serious injury. (00556c)

- Take a rider training course.

- Read Owner's Manual before riding, adding accessories or servicing.
- Wear a helmet, eye protection and protective clothing.
- Never tow a trailer.

CAUTION

Do not run the engine at extremely high RPM with clutch disengaged or transmission in neutral. Running an engine at high RPM can result in engine damage. (00177a)

CAUTION

Do not exceed the maximum safe RPM specified below under any conditions. Exceeding the maximum safe engine RPM can result in equipment damage. (00248a)

- The maximum recommended safe engine speed is 5500 rpm.
- Do not idle engine unnecessarily for more than a few minutes with motorcycle standing still.

CAUTION

Air-cooled engines require air movement over the cylinders and heads to maintain proper operating temperature. Extended periods of idling or parade duty can overheat the engine, resulting in serious engine damage. (00178a)

An engine running long distances at high speed must be given closer than ordinary attention to avoid overheating and possible engine damage.

This applies particularly to a motorcycle equipped with windshield and fairing.

NOTE:

Have the engine checked regularly and keep it well tuned.

⚠WARNING

When riding on wet roads, brake efficiency and traction are greatly reduced. Failure to use care when braking, accelerating or turning on wet roads can cause loss of control, which could result in death or serious injury. (00041a)

NOTE:

When descending upon a long, steep grade, downshift and use engine compression together with intermittent application of both brakes to slow the motorcycle.

⚠WARNING

Continuous use of brake causes overheating and reduced

efficiency, which could result in death or serious injury. (00042a)

⚠WARNING

Do not tow a disabled motorcycle. Towing can adversely affect stability and handling, which could result in death or serious injury. (00017a)

Rocker Models

CAUTION

Rocker models have a rear fork-mounted fender. The fender will not support a passenger or fender-mounted luggage rack. Damage to the fender could occur. (00557g)

Break-in Riding Rules

The First 500 Miles (800 Kilometers)

The sound design, quality materials, and workmanship that are built into your new Harley-Davidson will give you optimum performance right from the start.

To allow your engine to wear-in its critical parts, we recommend that you observe the riding rules provided below for the first 500 mi 800 km .

1. During the first 50 mi 80 km of riding, keep the engine speed below 3000 rpm in any gear. Do not lug the engine by running or accelerating at very low rpm, or by running at high rpm longer than needed for shifting or passing.

   NOTE:

   For models without a tachometer, upshift and downshift gears at the recommended speeds. Refer to Upshift (Acceleration) Gear Speeds: Six Speed and Downshift (Deceleration) Gear Speeds: Six Speed.

2. Up to 500 mi 800 km , vary the engine speed and avoid operating at any steady engine speed for long periods. Engine speed up to 3500 rpm in any gear is permissible.

3. Drive slowly and avoid fast starts at wide open throttle until the engine has warmed up.

4. Avoid lugging the engine by not running the engine at very low speeds in higher gears.

5. Avoid hard braking. Break-in new brakes with moderate use for the first 200 mi 300 km .

Pre-Riding Checklist

⚠WARNING

Read the CONTROLS AND INDICATORS section before

riding your motorcycle. Failure to understand the operation of the motorcycle could result in death or serious injury. (00043a)

Before riding your motorcycle at any time, make a general inspection to be sure it is in safe riding condition.

⚠WARNING

Stop the engine when refueling or servicing the fuel system. Do not smoke or allow open flame or sparks near gasoline. Gasoline is extremely flammable and highly explosive, which could result in death or serious injury. (00002a)

⚠WARNING

Avoid spills. Slowly remove filler cap. Do not fill above bottom of filler neck insert, leaving air space for fuel expansion. Secure filler cap after refueling. Gasoline is extremely flammable and highly explosive, which could result in death or serious injury. (00028a)

⚠WARNING

Use care when refueling. Pressurized air in fuel tank can force gasoline to escape through filler tube. Gasoline is extremely flammable and highly explosive, which could result in death or serious injury. (00029a)

1. Verify fuel is present in tank and add fuel if required.
2. Adjust mirrors to proper riding positions.
3. Check the oil level. Add oil if necessary.
4. Check controls to make sure they operate properly. Operate the front and rear brakes, throttle, clutch and shifter. All controls should operate freely without binding.
5. Check steering for proper operation by turning the handlebars through the full operating range. Handlebars should turn smoothly without binding.

⚠WARNING

Be sure tires are properly inflated, balanced and have adequate tread. Inspect your tires regularly and see a Harley-Davidson dealer for replacements. Riding with excessively worn, unbalanced or under-inflated tires can adversely affect stability and handling, which could result in death or serious injury. (00014a)

6. Check tire condition and pressure. Incorrect pressure will result in poor riding characteristics and can affect handling and stability. Refer to tire specifications for correct inflation pressure to use.

⚠WARNING

Be sure headlamp, tail and stop lamp and turn signals are operating properly before riding. Poor visibility of rider to other motorists can result in death or serious injury. (00478b)

7. Check all electrical equipment and switches including the headlamp, stop lamp, turn signals and horn for proper operation.
8. Check for any fuel, oil or hydraulic fluid leaks.
9. Check drive belt for wear or damage.
10. Service your motorcycle as necessary.

Starting the Engine

General

CAUTION

The engine should be allowed to run slowly for 15-30 seconds. This will allow the engine to warm up and let oil reach all surfaces needing lubrication. Failure to comply can result in engine damage. (00563b)

Do not roll the throttle before starting. Rolling the throttle before starting the motorcycle is unnecessary.

Starting

⚠WARNING

Shift transmission to neutral before starting engine to prevent accidental movement, which could result in death or serious injury. (00044a)

1. Turn the ignition switch to IGN. Do not roll the throttle.
2. See Right Handlebar Controls. Turn the OFF/RUN switch to RUN position.

   NOTE:

   The engine lamp will light for approximately 4 seconds and you will hear the fuel pump purr for approximately two (2) seconds as it operates to fill the fuel lines with gasoline.

3. Pull in clutch lever.

   NOTE:

   To activate the starting system, the clutch interlock circuitry requires that the clutch be disengaged. The clutch lever must be pulled in against the left handlebar grip and/or the transmission must be shifted to the neutral position (with the green neutral lamp lit).

4. Raise the jiffy stand (required on international models).

5. Press the starter button to start the motorcycle.

   NOTE:

   If the engine does not start, the starter will operate for 5 seconds and stop. Release the starter button and reapply. If after two 5 second starting attempts, the motorcycle still will not start, see a Harley-Davidson dealer.

6. When the engine has started, you can operate your motorcycle as you normally would after raising the jiffy stand.

NOTE:

If the fuel tank becomes completely dry, it may take a few seconds longer to start the motorcycle after filling the tank. It will not be necessary to take any extraordinary measures before starting the motorcycle.

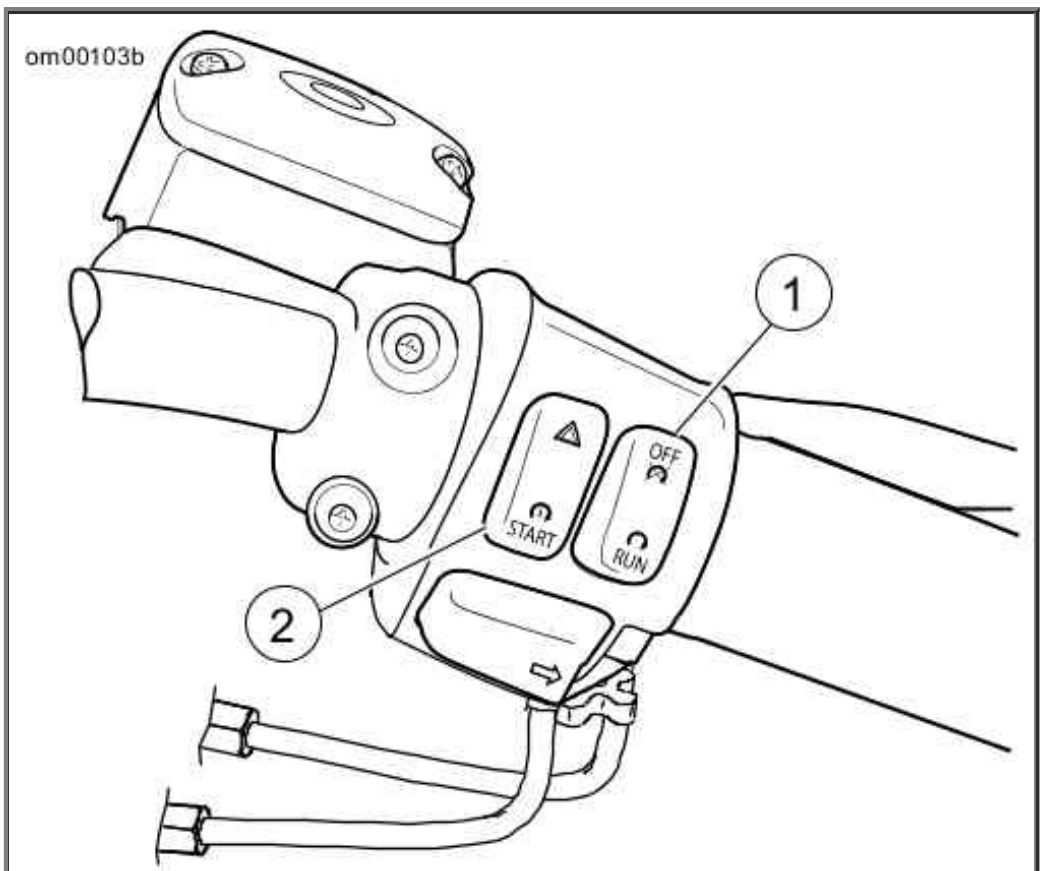

1. Engine off/run switch
2. Engine start switch

Right Handlebar Controls

Engine Idle Temperature Management System

For those riders who frequently find themselves in riding conditions where the vehicle is subjected to prolonged idle conditions or traffic congestion, an optional dealer enabled engine calibration is available. This calibration offers limited rear cylinder cooling with the vehicle stopped while the engine is left at idle.

This option is available for original equipment engine calibrations only. Motorcycles are delivered from the factory with the engine idle temperature management disabled. Engine idle temperature management can be enabled and disabled by your dealer.

Stopping the Engine

1. Stop the engine by turning the engine OFF/RUN switch on the right handlebar to OFF.
2. Turn the ignition switch to OFF. If the engine should be stalled or stopped in any way, turn the ignition switch to OFF at once to prevent battery discharge.

Shifting Gears

Shifting while Stopped

Motorcycle Stopped, Engine Off: Squeeze in the clutch lever to fully disengage the clutch. Rock the motorcycle backward and forward while lightly pressing on the shift lever.

Motorcycle Stopped, Engine Running: Gears may not engage because the transmission shafts are not turning and shifter components are not lined up.

Starting from a Stop

CAUTION

The clutch must be fully disengaged before attempting a gear shift. Failure to fully disengage the clutch can result in equipment damage. (00182a)

NOTE:

Always start the engine with the transmission in neutral. Always start forward motion in first gear.

1. With the engine running and the jiffy stand retracted, pull the clutch hand lever in against the handlebar grip to fully disengage the clutch.
2. Press the gear shift lever down to end of its travel and release. The transmission is now in first gear.
3. Ease out the clutch lever and at the same time, gradually open the throttle.

Upshift (Acceleration)

See Shifting Sequence: Upshift. Engage the next higher gear when the motorcycle reaches the shifting speed. Refer to Upshift (Acceleration) Gear Speeds: Six Speed.

Upshift (Acceleration) Gear Speeds: Six Speed

GEAR CHANGE	mph	km/h
First to second	15	25
Second to third	25	40
Third to fourth	35	55
Fourth to fifth	45	70
Fifth to sixth	55	85

1. Close the throttle.
2. Disengage the clutch (pull the clutch lever in).
3. Lift the gear shift lever up to the end of its travel and release.
4. Ease out the clutch lever and gradually open the throttle.

NOTES:

- *Disengage the clutch completely before each gear change.*
- *Partially close the throttle so the engine will not drag when clutch is again engaged (clutch lever released).*

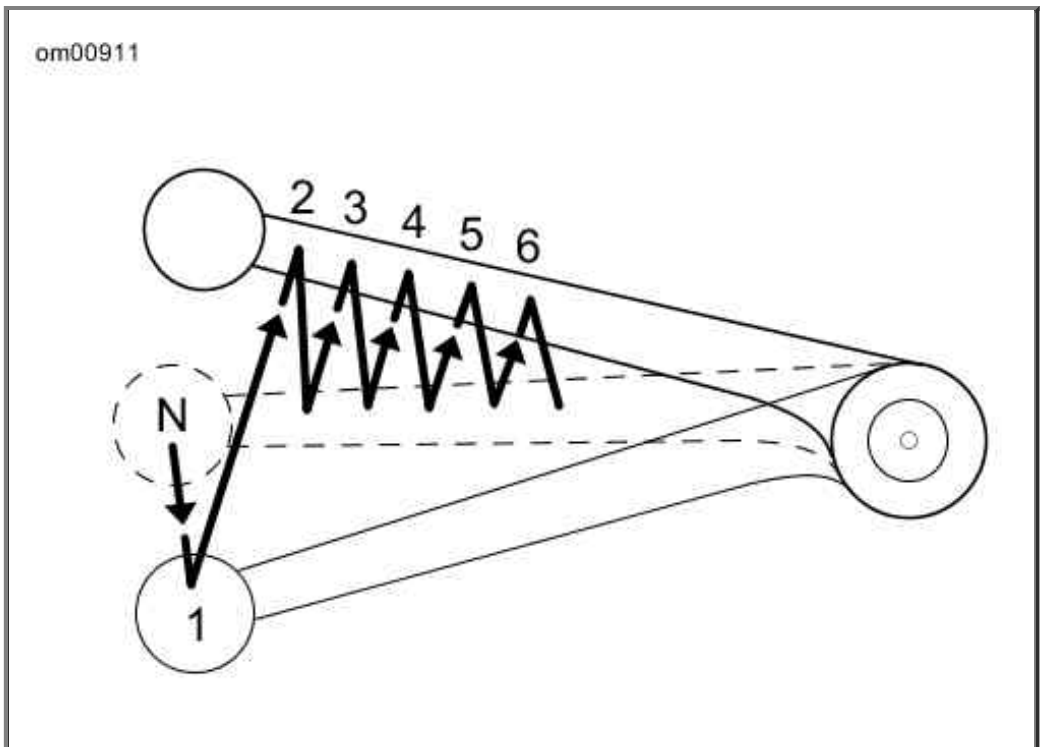

Shifting Sequence: Upshift

Downshift (Deceleration)

⚠WARNING

Do not downshift at speeds higher than those listed. Shifting to lower gears when speed is too high can cause

the rear wheel to lose traction and lead to loss of vehicle control, which could result in death or serious injury. (00045b)

See Shifting Sequence: Downshift. When engine speed decreases, as when climbing a hill or slowing for a turn, shift to the next lower gear. Refer to Downshift (Deceleration) Gear Speeds: Six Speed.

Downshift (Deceleration) Gear Speeds: Six Speed

GEAR CHANGE	mph	km/h
Sixth to fifth	50	80
Fifth to fourth	40	65
Fourth to third	30	50
Third to second	20	30
Second to first	10	15

1. Close the throttle.
2. Disengage the clutch (pull the clutch lever in).
3. Press the gear shift lever down to the end of its travel and release.
4. Ease out the clutch lever and gradually open the throttle.

NOTES:

- *Disengage the clutch completely before each gear change.*
- *Partially close the throttle so the engine will not drag when clutch is again engaged (clutch lever released).*

CAUTION

Shift to neutral before stopping engine. Shifting mechanism can be damaged by shifting gears while engine is stopped. (00183a)

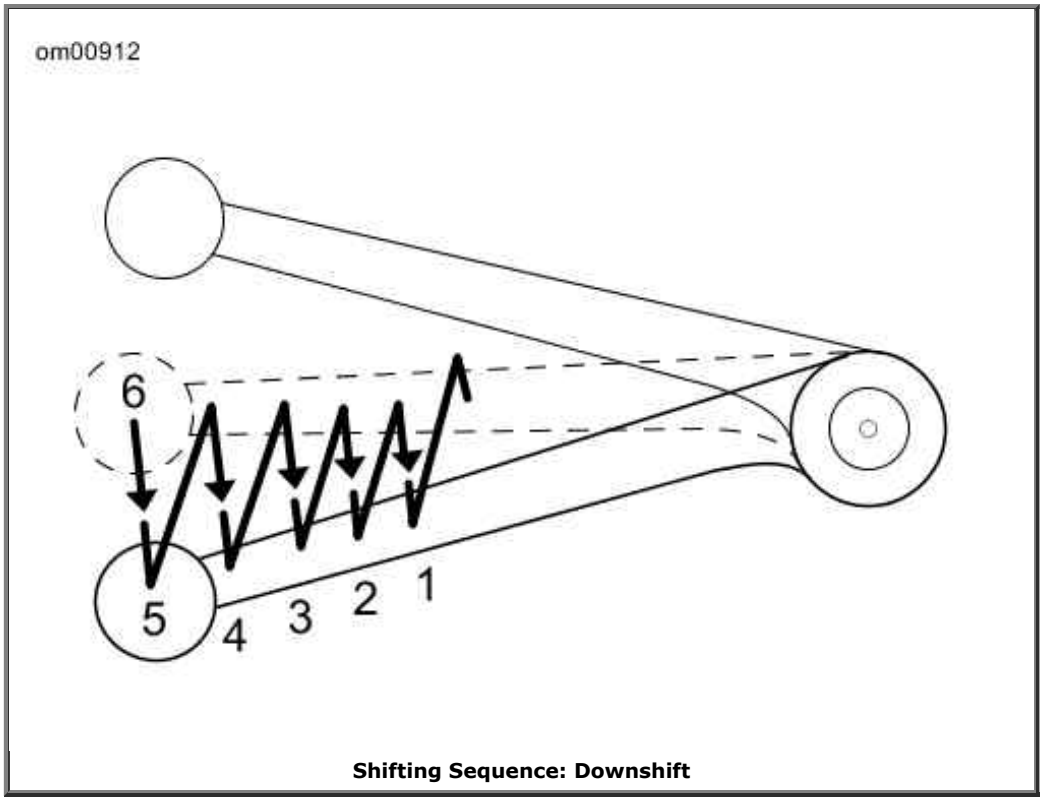

Shifting Sequence: Downshift

Maintenance and Lubrication

Safe Operating Maintenance

⚠WARNING

Perform the service and maintenance operations as indicated in the regular service interval table. Lack of regular maintenance at the recommended intervals can affect the safe operation of your motorcycle, which could result in death or serious injury. (00010a)

⚠WARNING

If you operate your motorcycle under adverse conditions (severe cold, extreme heat, very dusty environment, very bad roads, through standing water, etc.), you should perform the regular maintenance intervals more frequently to ensure the safe operation of your motorcycle. Failure to maintain your motorcycle could result in death or serious injury. (00094a)

Good maintenance leads to safe motorcycling. A careful check of certain equipment must be made after periods of storage. Also, frequently inspect the motorcycle between the regular service intervals to determine if additional maintenance is necessary.

Check the following items:

1. Tires for correct pressure, abrasions or cuts.

2. Drive belt for proper tension, wear or damage.
3. Brakes, steering and throttle for responsiveness and freedom from binding.
4. Brake fluid level and condition. Hydraulic lines and fittings for leaks. Also, check brake pads and discs for wear.
5. Cables for fraying or crimping and free operation.
6. Engine oil and primary chaincase/transmission fluid levels.
7. Headlamp, tail lamp, brake lamp and turn signals for proper operation.

Break-in Maintenance

NOTE:

The performance of new motorcycle initial service is required to keep your new motorcycle warranty in force and for proper emissions system operation.

Refer to Regular Service Intervals: 2011 Softail Models. After a new motorcycle has been ridden its first 1000 miles (1600 kilometers), it should be taken to an authorized Harley-Davidson dealer for initial service operations.

NOTE:

Because of unique design features, Springer models require the first scheduled maintenance at 500 miles (800 kilometers).

Engine Lubrication

⚠CAUTION

Prolonged or repeated contact with used motor oil may be harmful to skin and could cause skin cancer. Promptly wash affected areas with soap and water. (00358b)

⚠CAUTION

If swallowed, do not induce vomiting. Contact a physician immediately. In case of contact with eyes, immediately flush with water. Contact a physician if irritation persists. (00357c)

CAUTION

Do not switch lubricant brands indiscriminately because some lubricants interact chemically when mixed. Use of inferior lubricants can damage the engine. (00184a)

Engine oil is a major factor in the performance and service life of the engine. Always use the proper grade of oil for the lowest temperature expected before the next scheduled oil change. Your authorized dealer has the proper oil to suit your requirements. Refer to Recommended

Engine Oils.

If it is necessary to add oil and Harley-Davidson oil is not available, use an oil certified for diesel engines. Acceptable diesel engine oil designations include: CH-4, CI-4 and CJ-4.

The preferred viscosities for the diesel engine oils in descending order are: 20W50, 15W40 and 10W40.

At the first opportunity, see an authorized dealer to change back to 100 percent Harley-Davidson oil.

Recommended Engine Oils

H-D TYPE	VISCOSITY	H-D RATING	LOWEST AMBIENT TEMPERATURE	COLD WEATHER STARTS BELOW 50 °F (10 °C)
H-D Multi-grade	SAE 10W40	HD 360	Below 40 °F 4 °C	Excellent
Screamin' Eagle SYN3 Synthetic Motorcycle Lubricant	SAE 20W50	HD 360	Above 40 °F 4 °C	Excellent
Screamin' Eagle Synthetic Blend Motorcycle Engine Oil	SAE 20W50	HD 360	Above 40 °F 4 °C	Good
H-D Multi-grade	SAE 20W50	HD 360	Above 40 °F 4 °C	Good
H-D Regular Heavy	SAE 50	HD 360	Above 60 °F 16 °C	Poor
H-D Extra Heavy	SAE 60	HD 360	Above 80 °F 27 °C	Poor

Checking Oil Level

Engine oil level should be checked only when engine is at normal operating temperature.

- Check engine oil supply at each complete fuel refill.
- Refer to Regular Service Intervals: 2011 Softail Models. Oil should be changed at proper intervals in normal service at warm or moderate temperatures.
- Oil change intervals should be shorter in cold weather. See Winter Lubrication.

NOTES:

- *See Oil Dipstick Location: FXCWC. On FXCWC models, remove the dipstick by unscrewing the cap. On all other models, remove the dipstick by pulling out the oil filler cap. To install, insert dipstick in oil tank and push the filler cap in until seated in the fill spout.*
- *The motorcycle should be on jiffy stand when checking oil level.*

CAUTION

Oil level cannot be accurately measured on a cold engine. For pre-ride inspection, with motorcycle leaning on jiffy stand on level ground, oil should register on dipstick

between arrows when engine is cold. Do not add oil to bring the level to the FULL mark on a COLD engine. (00185a)

CAUTION

Do not allow hot oil level to fall below Add/Fill mark on dipstick. Doing so can result in equipment damage and/or equipment malfunction. (00189a)

CAUTION

Do not overfill oil tank. Doing so can result in oil carryover to the air cleaner leading to equipment damage and/or equipment malfunction. (00190a)

Oil Level Cold Check

Perform engine oil level **COLD CHECK** as follows:

1. For pre-ride inspection with the vehicle on jiffy stand on level ground, remove and wipe off the dipstick. Install the dipstick back into the oil tank.

   NOTE:

   For FXCWC models, thread the filler cap onto the spout until tight. On all other models, push the filler cap until fully seated in the spout.

2. See Engine Oil Level: Softail Models (Typical). Remove the dipstick and verify oil registers on the dipstick between the two marks.

   a. If oil level registers on the dipstick, proceed to Oil Level Hot Check.

   b. If oil does not register on the dipstick, proceed to step 3.

3. With the dipstick removed, look into the dipstick opening and verify the oil level is at the filler neck weld.

   a. If the oil level is at or near the filler neck weld, proceed to Oil Level Hot Check.

   b. If the oil level is not at or near the filler neck weld, add only enough oil to bring the level to the filler neck weld. Then proceed to Oil Level Hot Check.

Oil Level Hot Check

Perform engine oil level **HOT CHECK** as follows:

1. Ride motorcycle until engine is at normal operating temperature.

   NOTE:

   The engine will require a longer warm up period in colder weather.

2. With the vehicle upright on level ground, allow engine to idle for 1-2 minutes. Turn engine off.

3. With vehicle on jiffy stand remove and wipe off the dipstick. Install the dipstick back into the oil tank.

   NOTE:

   For FXCWC models, thread the filler cap onto the spout until tight. On all other models, push the filler cap until fully seated in the spout.

4. See Engine Oil Level: Softail Models (Typical). Remove the dipstick and note the level of the oil. Add only enough oil to bring the level to the FULL mark on the dipstick. Do not overfill.

   NOTE:

   Refer to Recommended Engine Oils. Use only recommended oil specified under Engine Lubrication.

5. Start engine and carefully check for oil leaks around drain plug and oil filter.

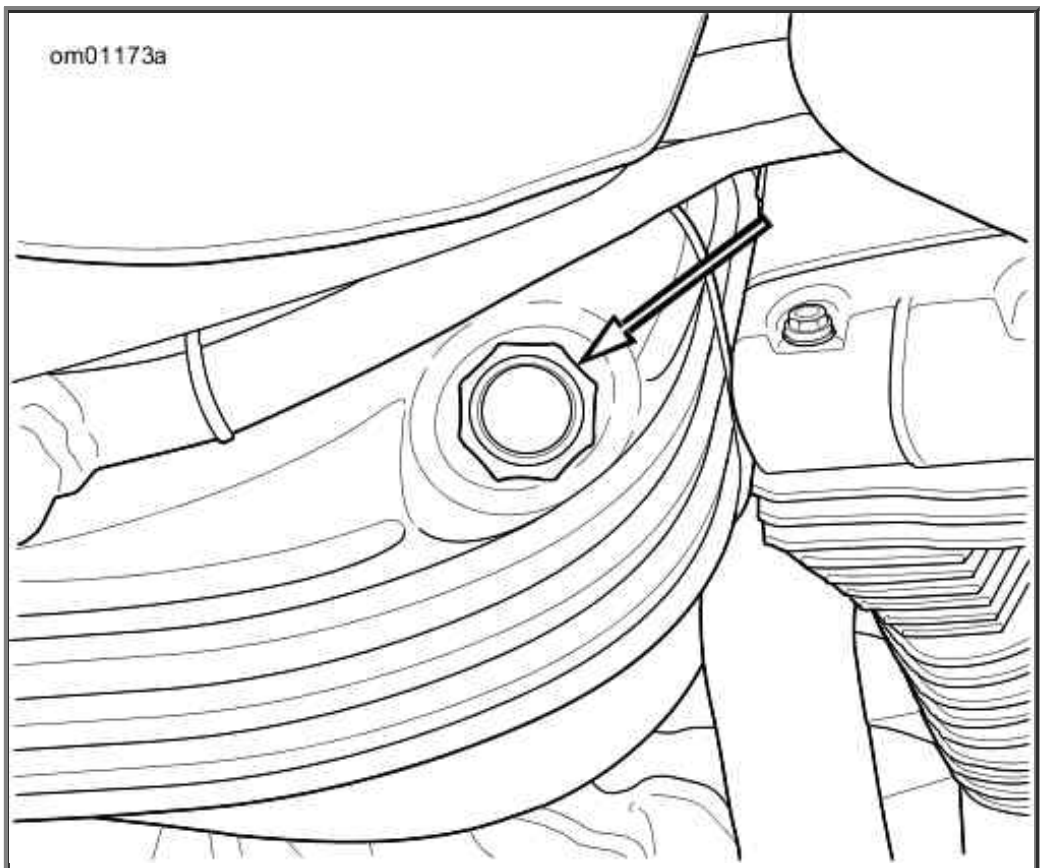

Oil Dipstick Location: FXCWC

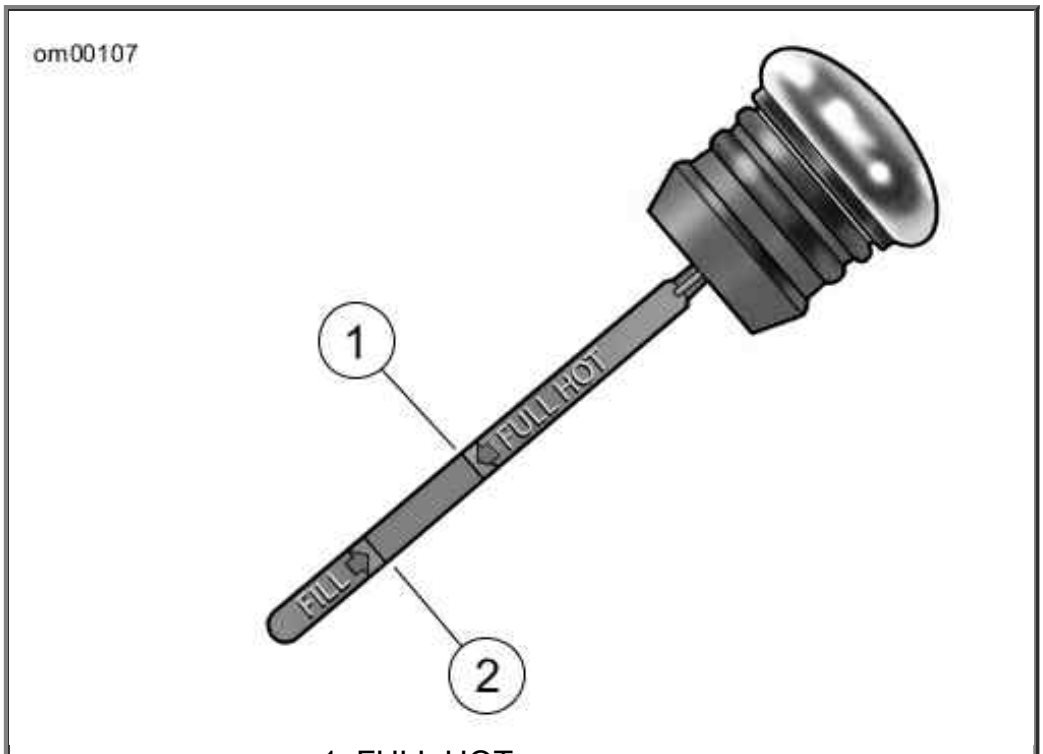

1. FULL HOT
2. FILL

Engine Oil Level: Softail Models (Typical)

Changing Oil and Oil Filter

Oil filter is located on an oil filter mount in front of the engine.

CAUTION

Do not switch lubricant brands indiscriminately because some lubricants interact chemically when mixed. Use of inferior lubricants can damage the engine. (00184a)

⚠WARNING

Be sure that no lubricants or fluids get on tires, wheels or brakes when changing fluid. Traction can be adversely affected, which could result in loss of control of the motorcycle and death or serious injury. (00047d)

Twin Cam 96B equipped vehicles require the premium oil filter (Part No. 63798-99A Chrome or Part No. 63731-99A Black).

1. See Oil Dipstick Location: FXCWC. On FXCWC models, loosen oil filler cap and remove. On other models, pull on filler cap while moving plug back and forth to remove.
2. See Oil Tank Drain Plug: Softail Models. Remove engine oil drain plug with O-ring (2). Allow oil to completely drain into a suitable container.

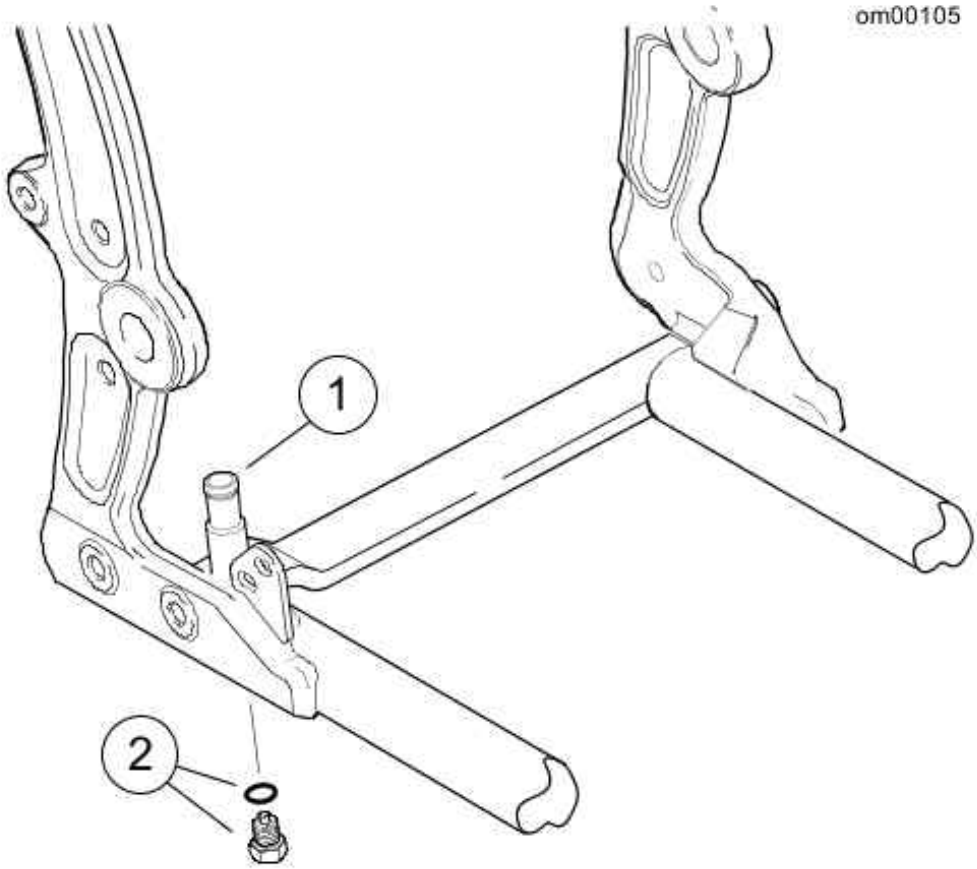

1. Frame connection for oil tank drain hose
2. Oil tank drain plug and O-ring

Oil Tank Drain Plug: Softail Models

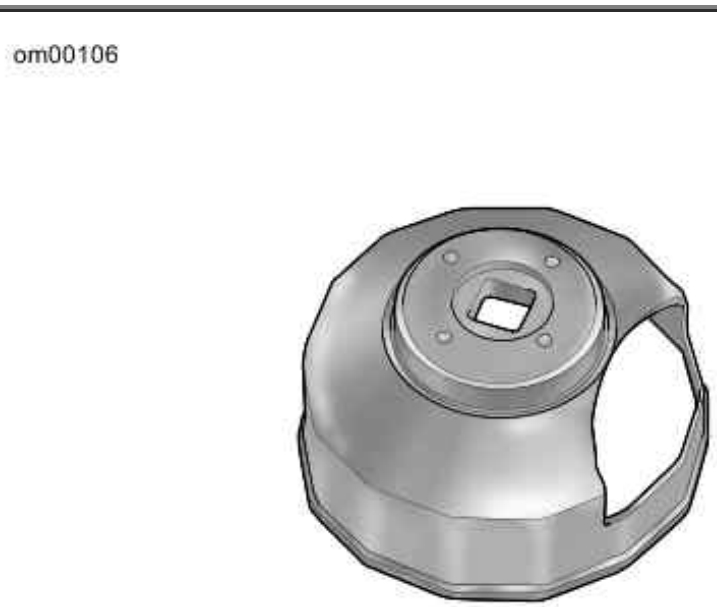

Oil Filter Wrench (Part No. HD-44067)

CAUTION

Use Harley-Davidson oil filter wrench for filter removal.

This tool can prevent damage to crankshaft position sensor and/or sensor cable. (00192b)

NOTE:

Dispose of oil and oil filter in accordance with local regulations.

3. See Oil Filter Wrench (Part No. HD-44067). Remove the oil filter using the OIL FILTER WRENCH HD-44067 . Clean the oil filter mount flange of any old gasket material (surface should be smooth and free of any debris or old gasket material).

4. Inspect O-ring for tears or damage. Replace if required. Wipe any foreign material from plug.

5. Install O-ring and drain plug and tighten to 14-21 ft-lbs (19.0-28.5 Nm).

6. See Applying Thin Oil Film. Apply a thin film of oil to gasket contact surface on mounting plate, gasket and new oil filter.

7. Screw filter onto adapter until gasket contacts plate surface, then apply another three-quarter to one full turn.

8. Fill oil tank with no more than 3.50 qt 3.31 L of oil. Use the proper grade of oil for the lowest temperature expected before next oil change.

CAUTION

Do not overfill oil tank. Doing so can result in oil carryover to the air cleaner leading to equipment damage and/or equipment malfunction. (00190a)

9. Install the filler cap.

10. Start engine and carefully check for oil leaks around drain plug and oil filter.

11. Check engine oil level. Install filler cap.

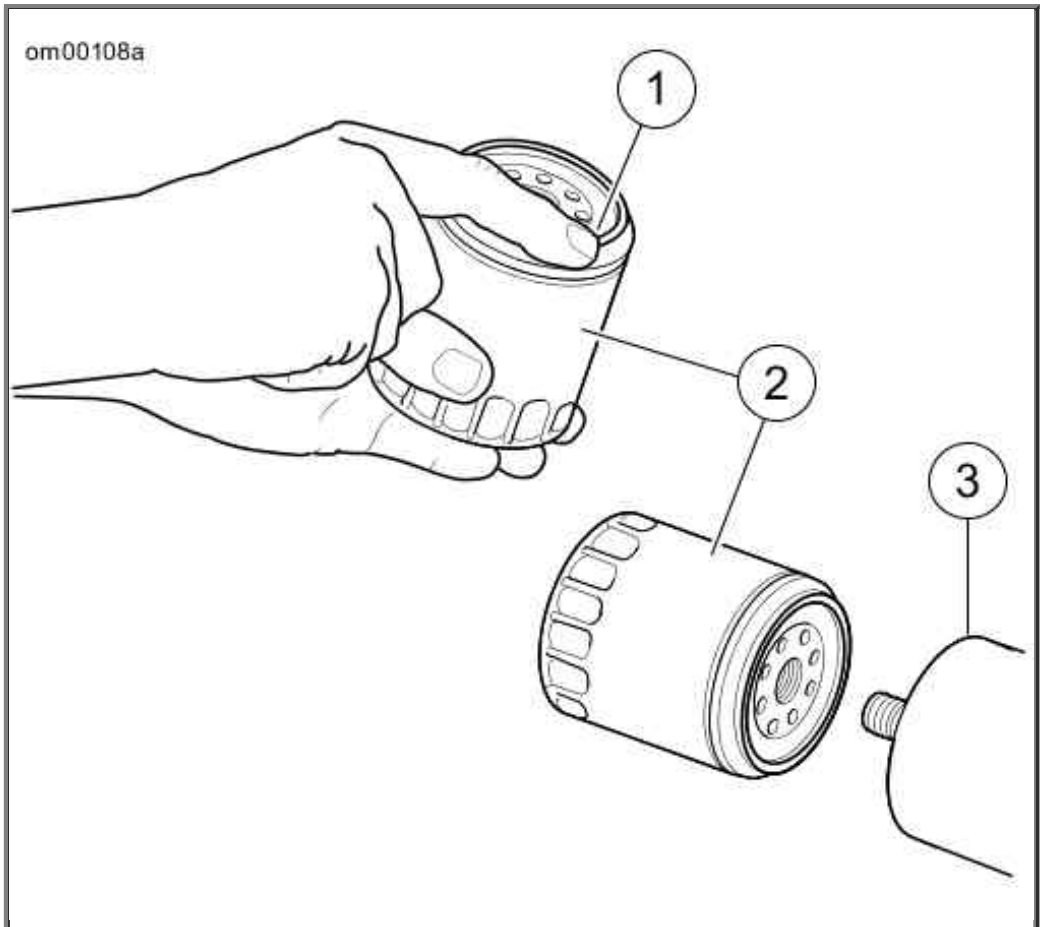

1. Thin film of oil ONLY
2. Oil filter
3. Mounting plate

Applying Thin Oil Film

Winter Lubrication

In colder climates, the engine oil should be changed often. If motorcycle is used frequently for short trips, less than 15 mi 24 km , in ambient temperatures below 60 °F 16 °C , oil change intervals should be reduced to 1500 mi 2400 km . Motorcycles used only for short runs must have a thorough tank flush-out before **new** oil is put in. The tank flush-out should be performed by an authorized dealer or qualified technician.

NOTE:

The further below freezing the temperature drops, the shorter the oil change interval should be.

Water vapor is a normal by-product of combustion in any engine. During cold weather operation, some of the water vapor condenses to liquid form on the cool metal surfaces inside the engine. In freezing weather this water will become slush or ice and, if allowed to accumulate too long, may block the oil lines and cause damage to the engine.

If the engine is run frequently and allowed to thoroughly warm up, most of this water will become vapor again and will be blown out through the crankcase breather.

If the engine is not run frequently and allowed to thoroughly warm up, this water will accumulate, mix with the engine oil and form a sludge that is harmful to the engine.

Transmission Lubrication

The transmission lubricant level should be checked monthly.

Refer to Regular Service Intervals: 2011 Softail Models. The transmission should be drained and refilled with fresh lubricant at recommended intervals.

NOTE:

When checking the transmission lubricant level, the motorcycle should be leaning on the jiffy stand. Allow a short period of time to equalize lubricant level in the transmission compartments.

Check Lubricant Level

---

1. Park motorcycle on the jiffy stand.
2. See Transmission Filler Plug/Dipstick (FXCWC shown). Remove the threaded filler plug/dipstick by turning the plug counterclockwise.
3. See Transmission Filler Plug/Dipstick Lubricant Level. Wipe off filler plug/dipstick. Insert in filler hole and remove. (Dipstick should rest on lip of filler. Do not tighten. Lubricant level should be between the upper and lower ends of the oil level indicator marks on the dipstick.

⚠WARNING

Be sure that no lubricants or fluids get on tires, wheels or brakes when changing fluid. Traction can be adversely affected, which could result in loss of control of the motorcycle and death or serious injury. (00047d)

CAUTION

When draining or adding lubricant, do not allow dirt, debris or other contaminants to enter the engine. (00198a)

4. Add lubricant, if necessary. Do not overfill or leakage may occur.

   NOTES:
   - *When filling the transmission, use GENUINE Harley-Davidson FORMULA+ TRANSMISSION AND PRIMARY CHAINCASE LUBRICANT (Part No. 99851-05 qt).*
   - *The transmission fluid capacity is approximately 32 oz 0.95 L .*
   - *Inspect O-ring for tears or damage. Replace if required. Wipe any foreign material from plug.*

5. Install threaded filler plug/dipstick and tighten to 25-75 in-lbs (2.8-8.5 Nm).

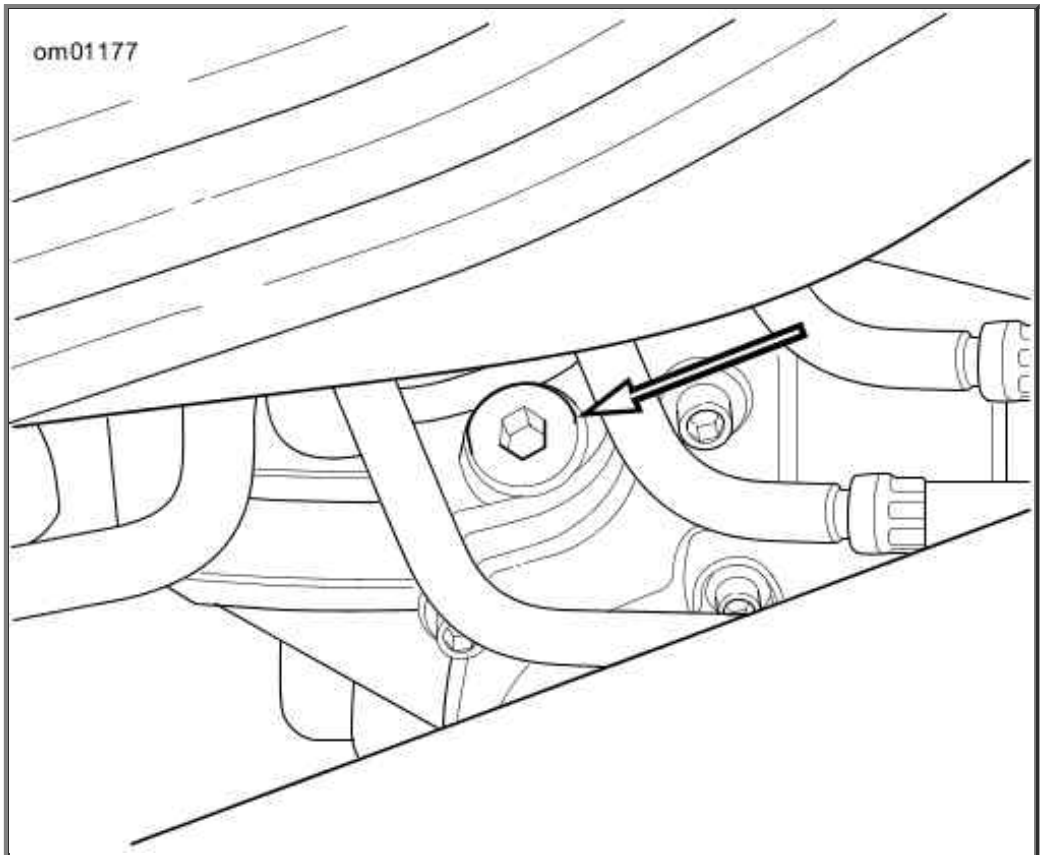

Transmission Filler Plug/Dipstick (FXCWC shown)

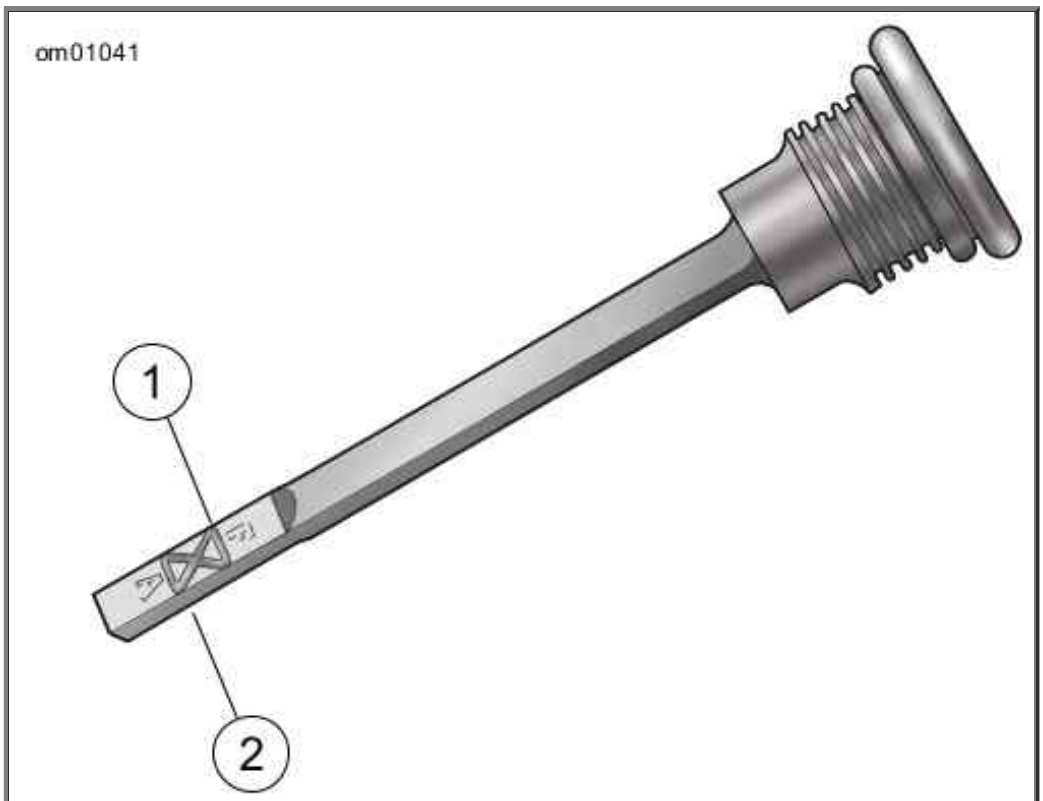

1. FULL
2. ADD

Transmission Filler Plug/Dipstick

Lubricant Level

Changing Transmission Lubricant

1. See Transmission Filler Plug/Dipstick (FXCWC shown). Remove the transmission filler

plug/dipstick.

2. See Transmission Drain Plug (Bottom View). Remove transmission drain plug and drain lubricant into a suitable container.

CAUTION

When draining or adding lubricant, do not allow dirt, debris or other contaminants to enter the engine. (00198a)

NOTE:

Do not overfill or leakage may occur. The transmission lubricant capacity is approximately 32 oz 0.95 L .

⚠WARNING

Be sure that no lubricants or fluids get on tires, wheels or brakes when changing fluid. Traction can be adversely affected, which could result in loss of control of the motorcycle and death or serious injury. (00047d)

NOTE:

Dispose of transmission lubricant in accordance with local regulations.

3. Inspect O-ring for tears or damage on the drain plug. Replace if required. Wipe any foreign material from plug.

4. Install drain plug and tighten to 14-21 ft-lbs (19.0-28.5 Nm).

5. Fill the transmission with 32 oz 0.95 L of GENUINE Harley-Davidson FORMULA+ TRANSMISSION AND PRIMARY CHAINCASE LUBRICANT (Part No. 99851-05 qt).

6. Install threaded filler/check plug and tighten to 25-75 in-lbs (2.8-8.5 Nm).

7. Start engine and carefully check for leaks around drain plug.

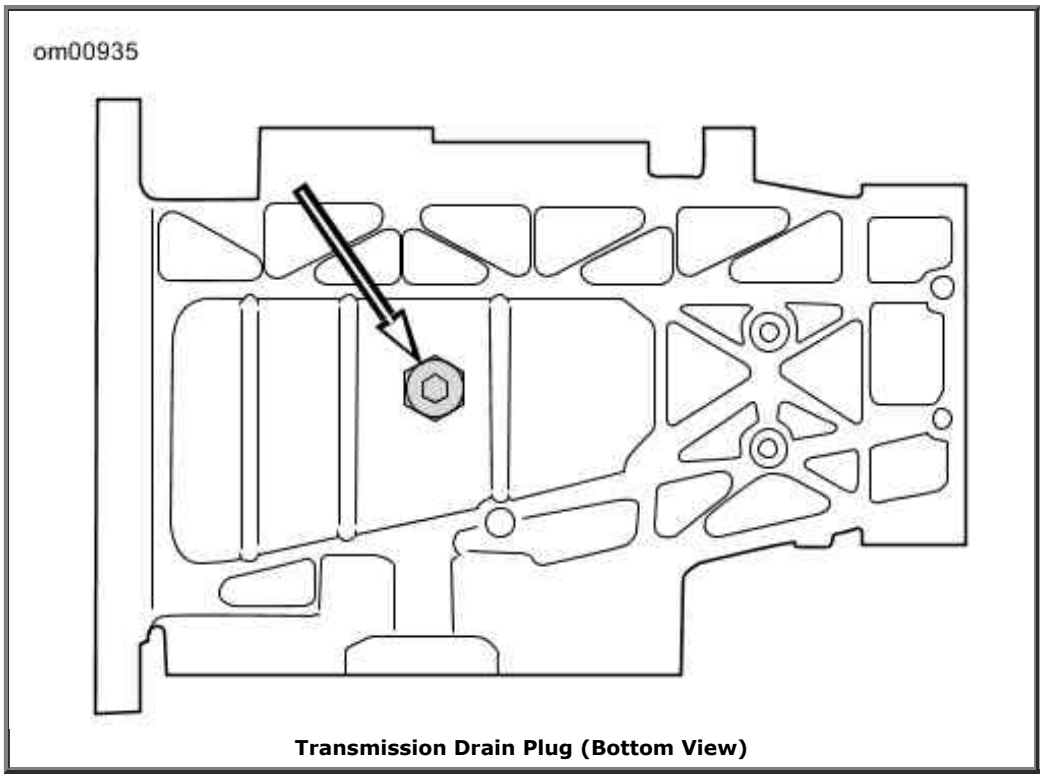

Transmission Drain Plug (Bottom View)

Primary Chaincase Lubrication

Lubrication is a major factor in the performance and service life of the clutch components.

Refer to Regular Service Intervals: 2011 Softail Models. The primary chaincase should be drained and refilled with fresh lubricant at proper intervals.

NOTE:

Use only GENUINE Harley-Davidson FORMULA+ TRANSMISSION AND PRIMARY CHAINCASE LUBRICANT (Part No. 99851-05 qt) when changing primary chaincase lubricant.

Chaincase Lubricant

Refer to Regular Service Intervals: 2011 Softail Models. The chaincase lubricant should be drained and refilled with fresh lubricant at proper intervals.

CAUTION

Do not overfill the primary chaincase with lubricant. Overfilling can cause rough clutch engagement, incomplete disengagement, clutch drag and/or difficulty in finding neutral at engine idle. (00199b)

Changing Chaincase Lubricant

1. Ride motorcycle until engine is warmed up to normal operating temperature.

CAUTION

When draining or adding lubricant, do not allow dirt, debris

When draining or adding lubricant, do not allow dirt, debris or other contaminants to enter the engine. (00198a)

2. See Clutch Cover. Using a T27 TORX drive head, remove five screws (3) (with captive washers) to free clutch inspection cover (2) from primary chaincase cover.

3. See Removing Chaincase Drain Plug. Remove magnetic drain plug at bottom of inner primary chaincase cover. Drain lubricant into suitable container.

   NOTE:

   Dispose of chaincase lubricant in accordance with local regulations.

4. Clean drain plug. If plug has accumulated a lot of debris, inspect the condition of the chaincase components.

5. Install **new** o-ring on drain plug.

6. Install drain plug back into inner primary chaincase cover. Tighten plug to 14-21 ft-lbs (19-28 Nm).

CAUTION

Do not overfill the primary chaincase with lubricant. Overfilling can cause rough clutch engagement, incomplete disengagement, clutch drag and/or difficulty in finding neutral at engine idle. (00199b)

7. Pour 32 oz 0.95 L of GENUINE Harley-Davidson FORMULA+ TRANSMISSION AND PRIMARY CHAINCASE LUBRICANT (Part No. 99851-05 qt) through the clutch inspection cover opening.

⚠WARNING

Be sure that no lubricants or fluids get on tires, wheels or brakes when changing fluid. Traction can be adversely affected, which could result in loss of control of the motorcycle and death or serious injury. (00047d)

CAUTION

When draining or adding lubricant, do not allow dirt, debris or other contaminants to enter the engine. (00198a)

   NOTE:

   Use only GENUINE Harley-Davidson FORMULA+ TRANSMISSION AND PRIMARY CHAINCASE LUBRICANT (Part No. 99851-05 quart).

8. Install clutch inspection cover and **new** gasket as follows:

   a. Thoroughly wipe all lubricant from cover mounting surface and groove in primary cover.

b. Position gasket in groove in primary cover and press each of the nubs on gasket into the groove. The nubs will retain the seal in position.

c. Insert screw (with captive washer) through clutch inspection cover and thread it into the top cover screw hole.

d. Start the remaining four screws (with captive washers).

e. Using a T27 TORX drive head, alternately tighten screws to 84-108 in-lbs (9.5-12.2 Nm).

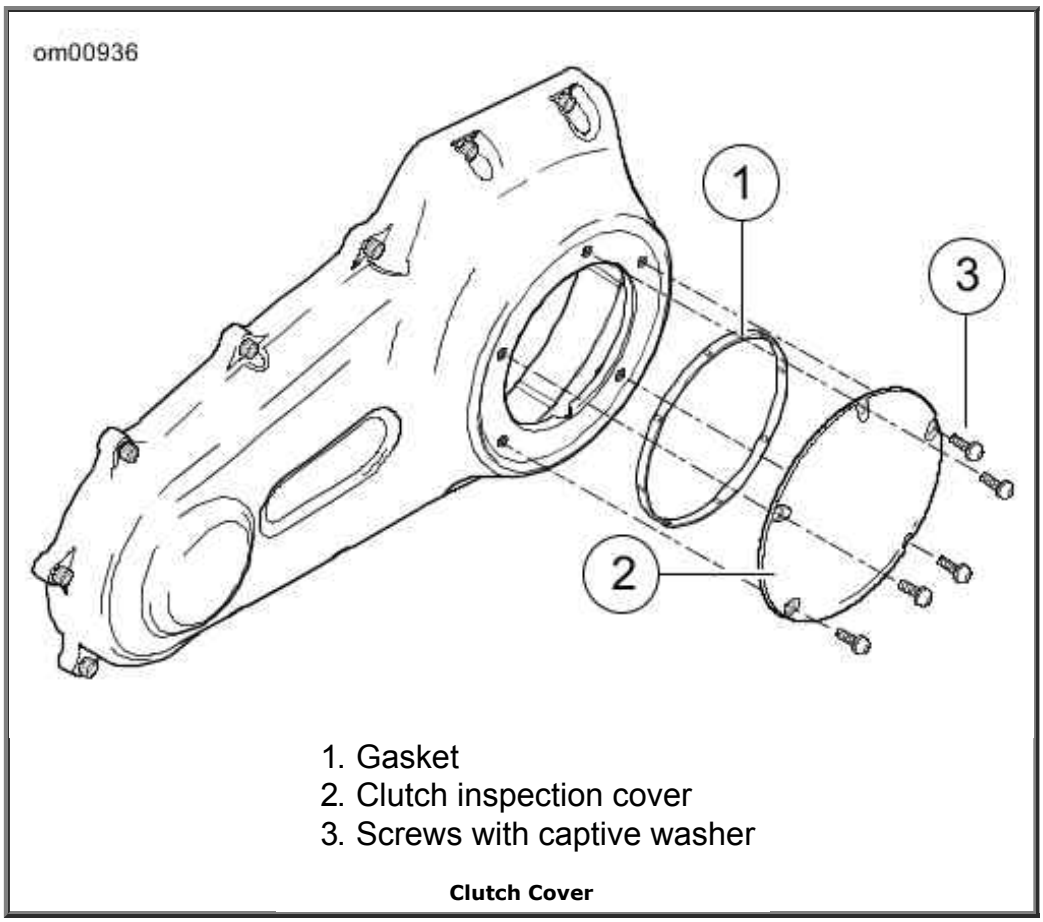

1. Gasket
2. Clutch inspection cover
3. Screws with captive washer

Clutch Cover

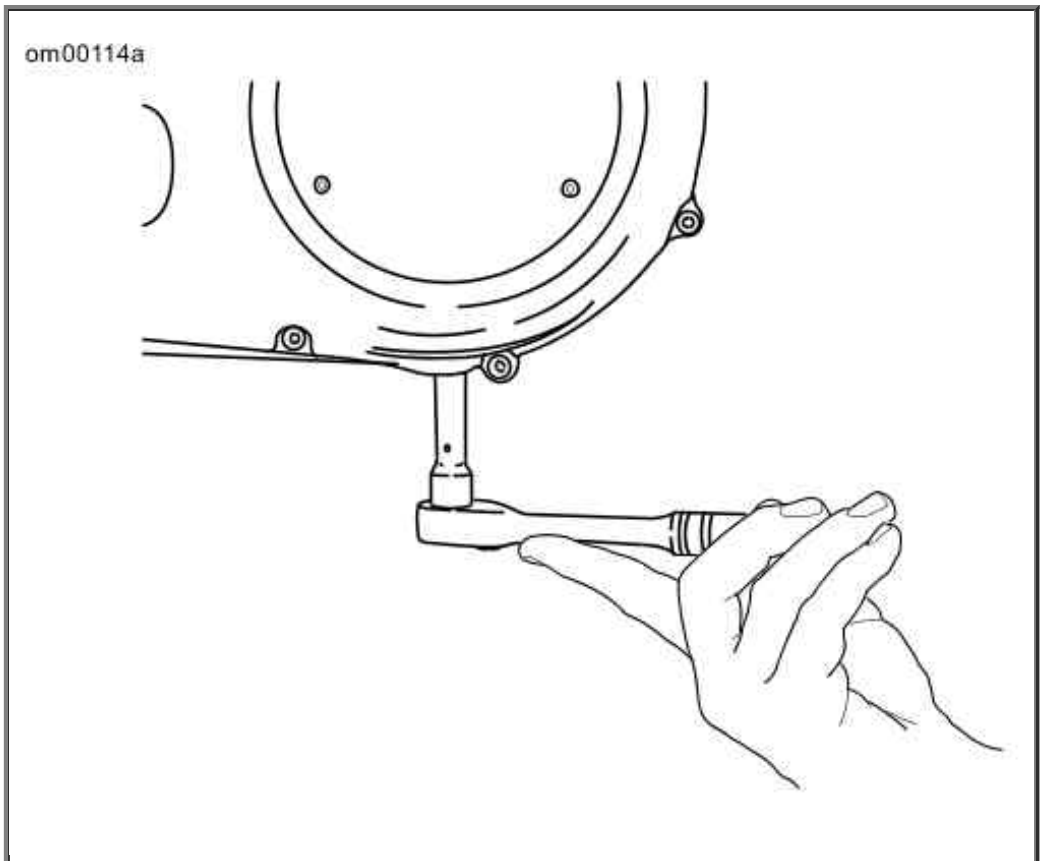

Removing Chaincase Drain Plug

Drive Belt

General

The inner tooth surface of the secondary belt has a thin coating of polyethylene lubricant. During initial operation, this coating will wear off as it is burnished into the belt fabric. This is a normal condition and not an indication of belt wear.

Refer to Regular Service Intervals: 2011 Softail Models. Belt tension is set at the factory and should be checked after the first 1000 miles 1600 kilometers and at proper intervals thereafter.

Checking Deflection

See Check Belt Deflection. Check belt deflection at the loosest spot in the belt with the transmission in neutral and the motorcycle at ambient temperature. Use the BELT TENSION GAUGE HD-35381-A to apply 10 lbs. 4.5 kg of force at the midpoint of the bottom belt strand with motorcycle resting on jiffy stand.

Belt deflection should be within specification as shown in Belt Deflection. If belt tension adjustment is necessary, see a Harley-Davidson dealer or follow the instructions given in the applicable Service Manual.

⚠WARNING

Be sure wheel and brake caliper are aligned. Riding with a

misaligned wheel or brake caliper can cause the brake disc to bind and lead to loss of control, which could result in death or serious injury. (00050a)

Check rear brake caliper position on rear brake disc. Disc should run true within brake caliper.

Belt Deflection

MODELS	in	mm
FXS, FLSTN, FLSTSB, FLSTFB (Lo)	1/4-5/16	6.4-7.9
All other models	9/16-5/8	14.3-15.9

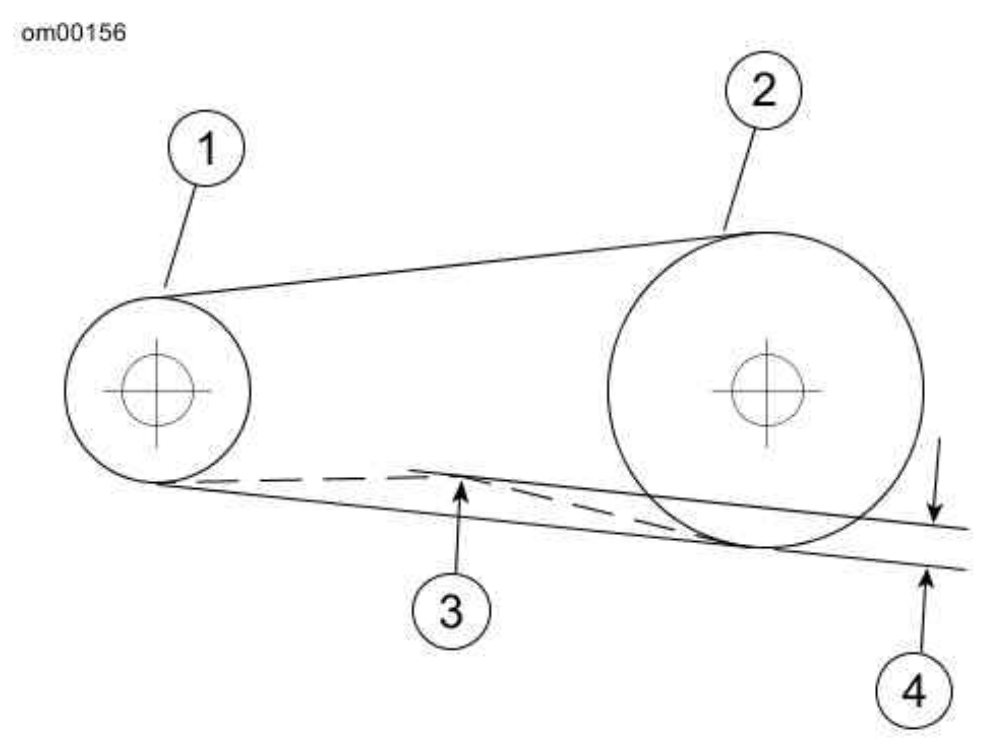

1. Transmission sprocket
2. Rear wheel sprocket
3. Force of 10 lbs (4.5 kg)
4. Deflection

Check Belt Deflection

Chassis Lubrication

Refer to Regular Service Intervals: 2011 Softail Models for all maintenance schedules.

NOTE:

Use recommended Special Purpose Grease (Part No. 99857-97) for steering head bearings. Use a multipurpose chassis grease for other applications.

1. Remove and lubricate handlebar throttle control grip sleeve with fresh graphite.
2. Lubricate throttle control cables and clutch control cable.

3. Lubricate front brake hand lever and clutch control hand lever only if necessary.
4. Inspect rear fork pivot shaft bearings.
5. Pack the steering head bearings with Special Purpose Grease (Part No. 99857-97) at the recommended service interval of 30,000 mi 48,000 km .
6. Lubricate the jiffy stand mechanism with SILVER GRADE ANTI-SEIZE (Part No. 98960-97).

NOTE:

For model specific information regarding the chassis lubrication, refer to the appropriate Service Manual or see a Harley-Davidson dealer.

Oil Applications

Refer to Regular Service Intervals: 2011 Softail Models for all control connections and parts. Vehicle should be oiled at regular intervals, particularly after washing motorcycle or driving in wet weather.

Front Fork Oil

Refer to Regular Service Intervals: 2011 Softail Models. Have a Harley-Davidson dealer drain the front fork oil and refill at proper intervals. If fork does not appear to be working properly or an appreciable amount of oil leakage should develop, see a Harley-Davidson dealer. If there is insufficient oil in either side of fork, the rebound action will be incorrect.

Fuel Filter

A fuel filter is attached to the fuel pump. See a service manual or Harley-Davidson dealer for fuel filter maintenance.

Clutch

CAUTION

The clutch control cable must be oiled and adjusted periodically to compensate for lining wear. See MAINTENANCE SCHEDULING in this manual. Failure to oil and adjust the clutch control cable can result in equipment damage. (00203b)

The need for attention to clutch and controls will be indicated by the clutch slipping under load or dragging when released. In this situation, check the control cable adjustment first. See a Harley-Davidson dealer for proper service.

Hydraulic Lifters

The hydraulic lifters are self-adjusting. They automatically adjust length to compensate for engine expansion and valve mechanism wear. This keeps the valve mechanism free of lash when the engine is running.

When starting an engine which has been turned off even for a few minutes, the valve mechanism may be slightly noisy until the hydraulic units completely refill with oil. If at any time the valve mechanism becomes abnormally noisy, other than for a short period immediately after engine is started, it is an indication that one or more of the hydraulic units may not be functioning properly.

Always check the engine oil level first since normal circulation of oil through the engine is necessary for proper operation of the hydraulic lifters.

If engine oil is at the proper level, the lifters may not be functioning properly because of dirt in the oil supply passages leading to the lifter units. See a Harley-Davidson dealer for service.

Steering Head Bearings

⚠WARNING

Adjustments to steering head bearings should be performed by a Harley-Davidson dealer. Improperly adjusted bearings can adversely affect handling and stability, which could result in death or serious injury. (00051b)

Check for proper steering head bearing adjustment and lubricate bearings at proper intervals. Refer to Regular Service Intervals: 2011 Softail Models.

With motorcycle front end raised off the floor, be sure front fork turns freely without any binding or interference and that there is no appreciable front to rear fork shake indicating excessive bearing looseness. Steering head bearings should be adjusted according to service manual procedure, if necessary.

Rear Fork Pivot Shaft

Refer to Regular Service Intervals: 2011 Softail Models. Check the tightness of the rear fork pivot shaft fastener and lubricate bearing and bushing at proper intervals.

NOTE:

For model specific information regarding the rear fork pivot shaft, refer to the service manual or see a Harley-Davidson dealer.

Brakes

Brake Fluid

CAUTION

D.O.T. 4 brake fluid will damage painted and body panel surfaces it comes in contact with. Always use caution and protect surfaces from spills whenever brake work is performed. Failure to comply can result in cosmetic damage. (00239b)

⚠CAUTION

Direct contact of D.O.T. 4 brake fluid with eyes can cause irritation. Avoid eye contact. In case of eye contact flush with large amounts of water and get medical attention. Swallowing large amounts of D.O.T. 4 brake fluid can cause digestive discomfort. If swallowed, obtain medical attention. Use in well ventilated area. KEEP OUT OF REACH OF CHILDREN. (00240a)

CAUTION

Do not allow dirt or debris to enter the master cylinder reservoir. Dirt or debris in the reservoir can cause improper operation and equipment damage. (00205c)

1. See Brake Fluid Master Cylinders. Look through the sight glass on the front and rear brake fluid reservoirs to check for the presence of brake fluid. If necessary, turn the handlebars from side to side or gently shake the vehicle to agitate the fluid.

- The sight glass will darken, when fluid is present.
- If the sight glass remains clear, see a Harley-Davidson dealer.

NOTES:

- *If the brake system is not leaking, there should never be a need to add fluid. If the fluid level is low, the pads are probably worn and need to be replaced. By replacing the pads, the fluid level will rise.*
- *Use only DOT 4 HYDRAULIC BRAKE FLUID (Part No. 99953-99A) and replace the brake fluid every 2 years. See a Harley-Davidson dealer.*

2. Verify that the front brake lever and the rear brake pedal have a firm feel when applied. If brakes are not firm, the brake system must be bled. See a Harley-Davidson dealer.

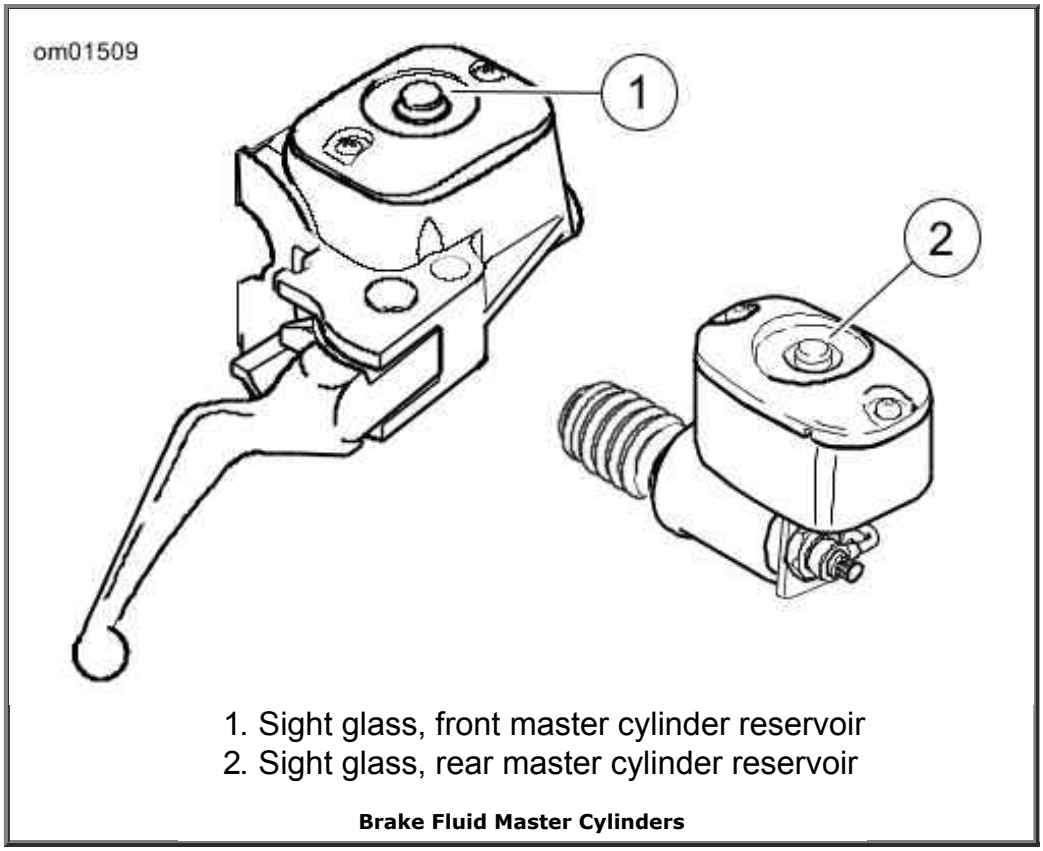

1. Sight glass, front master cylinder reservoir
2. Sight glass, rear master cylinder reservoir

Brake Fluid Master Cylinders

Brake Pads

⚠WARNING

Inspect brake pads for wear at service maintenance intervals. If you ride under adverse conditions (steep hills, heavy traffic, etc.), inspect more frequently. Excessively worn brake pads can lead to brake failure, which could result in death or serious injury. (00052a)

⚠WARNING

Always replace brake pads in complete sets for correct and safe brake operation. Improper brake operation could result in death or serious injury. (00111a)

⚠WARNING

Brakes are a critical safety component. Contact a Harley-Davidson dealer for brake repair or replacement. Improperly serviced brakes can adversely affect brake performance, which could result in death or serious injury. (00054a)

⚠WARNING

Perform routine scheduled brake maintenance. Lack of

maintenance at recommended intervals can adversely affect brake performance, which could result in death or serious injury. (00055a)

Harley-Davidson has equipped your new motorcycle with the optimum brake pad friction material available. It is selected to give the best performance possible under dry or wet conditions and at high operating temperatures. It exceeds all regulatory requirements currently in effect. However, during some braking conditions you may experience noise. This is normal for this friction material.

1. Check the rear brake disc as it spins. The disc should run true in the brake caliper.

2. See Brake Friction Material. Using a thin plastic ruler, measure the thickness of the brake pad friction material. For rear brakes, place the ruler against the brake disc through the space alongside the caliper.

NOTE:

2011 Softail Models use a different front brake pad than Dyna models. The changes to the front brake pad include an insulator plate and different friction material. Make certain you use the correct replacement brake pads. See an authorized Harley-Davidson dealer for the correct replacement pads.

3. If the brake pad friction material is at the minimum thickness or less, replace the pads. Always replace brake pads in pairs. See a Harley-Davidson dealer. Refer to Minimum Brake Pad Friction Material Thickness.

⚠WARNING

Be sure wheel and brake caliper are aligned. Riding with a misaligned wheel or brake caliper can cause the brake disc to bind and lead to loss of control, which could result in death or serious injury. (00050a)

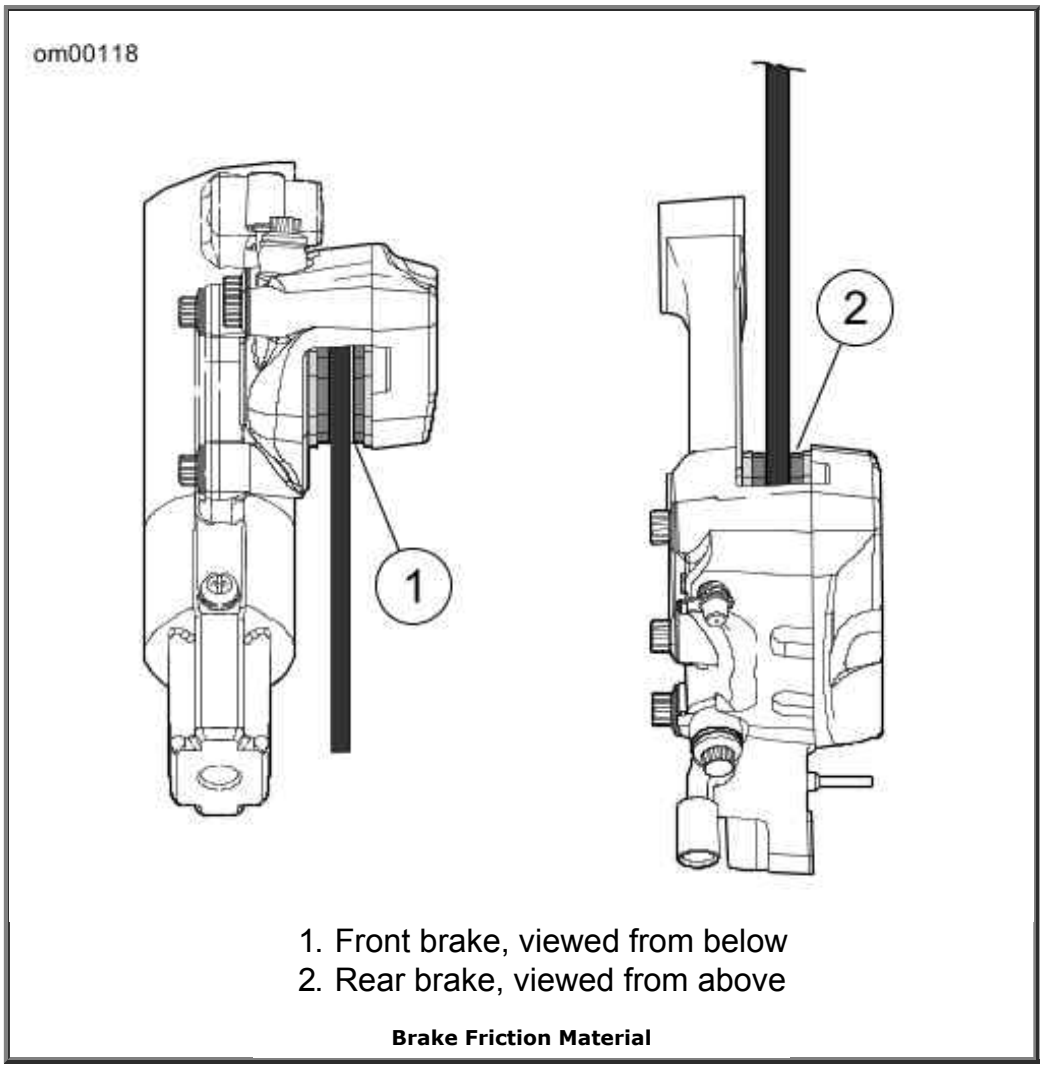

1. Front brake, viewed from below
2. Rear brake, viewed from above

Brake Friction Material

Minimum Brake Pad Friction Material Thickness

MODEL	in	mm
FLSTSB	0.060	1.59
Other models	0.040	1.02

Tires

Refer to Tires for approved tires and pressures.

- Be sure to keep tires properly inflated.
- Follow tire data for correct cold tire inflation pressures.
- Check before riding when tires are cold.
- Do not over-inflate tires.

⚠WARNING

Do not inflate tire beyond maximum pressure as specified on sidewall. Over inflated tires can blow out, which could result in death or serious injury. (00027a)

⚠WARNING

Match tires, tubes, rim seals, air valves and caps to the correct wheel rim. Contact a Harley-Davidson dealer. Mismatching can result in damage to the tire bead, allow tire slippage on the rim or cause tire failure, which could result in death or serious injury. (00023b)

Check inflation pressure and inspect tread for punctures, cuts, breaks, etc., at least weekly if in daily use. Check before each trip if used occasionally.

⚠WARNING

Be sure tires are properly inflated, balanced and have adequate tread. Inspect your tires regularly and see a Harley-Davidson dealer for replacements. Riding with excessively worn, unbalanced or under-inflated tires can adversely affect stability and handling, which could result in death or serious injury. (00014a)

Same as original equipment tires should be used. Other tires may not fit correctly, could adversely affect handling, and may be hazardous to use.

⚠WARNING

Tires are a critical safety component. Contact a Harley-Davidson dealer for tire repair or replacement. Improper tire service can adversely affect stability and handling, which could result in death or serious injury. (00057a)

⚠WARNING

Replace punctured or damaged tires. In some cases, small punctures in the tread area may be repaired from within the demounted tire by a Harley-Davidson dealer. Speed should NOT exceed 50 mph (80 km/h) for the first 24 hours after repair, and the repaired tire should NEVER be used over 80 mph (130 km/h). Failure to follow this warning could result in death or serious injury. (00015a)

⚠WARNING

Striking an object, such as a curb, can cause internal tire damage. If an object is struck, remove and inspect both the inside and outside of the tire. A damaged tire can adversely affect stability and handling, which could result in death or serious injury. (00058a)

Tire Replacement

Inspection

⚠WARNING

Harley-Davidson tires are equipped with wear bars that run horizontally across the tread. When wear bars become visible and only 1/32 in. (0.8 mm) tread depth remains, replace tire immediately. Using a worn tire can adversely affect stability and handling, which could result in death or serious injury. Use only Harley-Davidson approved replacement tires. (00090b)

See Dunlop Sidewall Tire Wear Bar Locator. Arrows on tire sidewalls pinpoint location of wear bar indicators.

Tread wear indicator bars will appear on tire tread surfaces when 1/32 in 0.8 mm or less of tire tread remains. See Dunlop Tire Wear Bar Appearance . Always replace tires before the tread wear indicator bars appear.

When To Replace Tires

New tires are needed if any of the following conditions exist:

1. Tread wear indicator bars become visible on the tread surfaces.
2. Tire cords or fabric become visible through cracked sidewalls, snags or deep cuts.
3. A bump, bulge or split in the tire.
4. Puncture, cut or other damage to the tire that cannot be repaired.

When installing tires on rims, do not rely on tread design to determine direction of rotation. Always be sure the rotational arrows molded into the sidewalls point in the direction of rotation when the vehicle is moving forward.

Refer to Tires for approved tires.

⚠WARNING

Use only Harley-Davidson approved tires. See a Harley-Davidson dealer. Using non-approved tires can adversely affect stability, which could result in death or serious injury. (00024a)

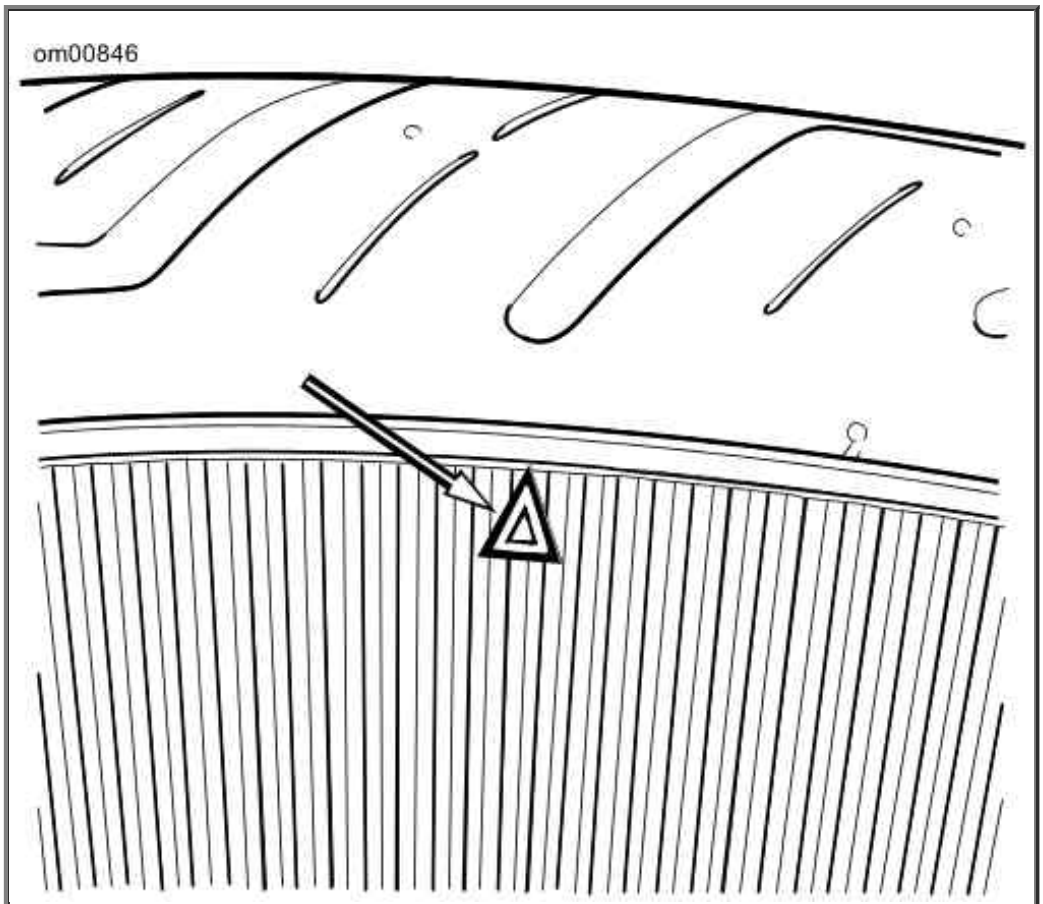

Dunlop Sidewall Tire Wear Bar Locator

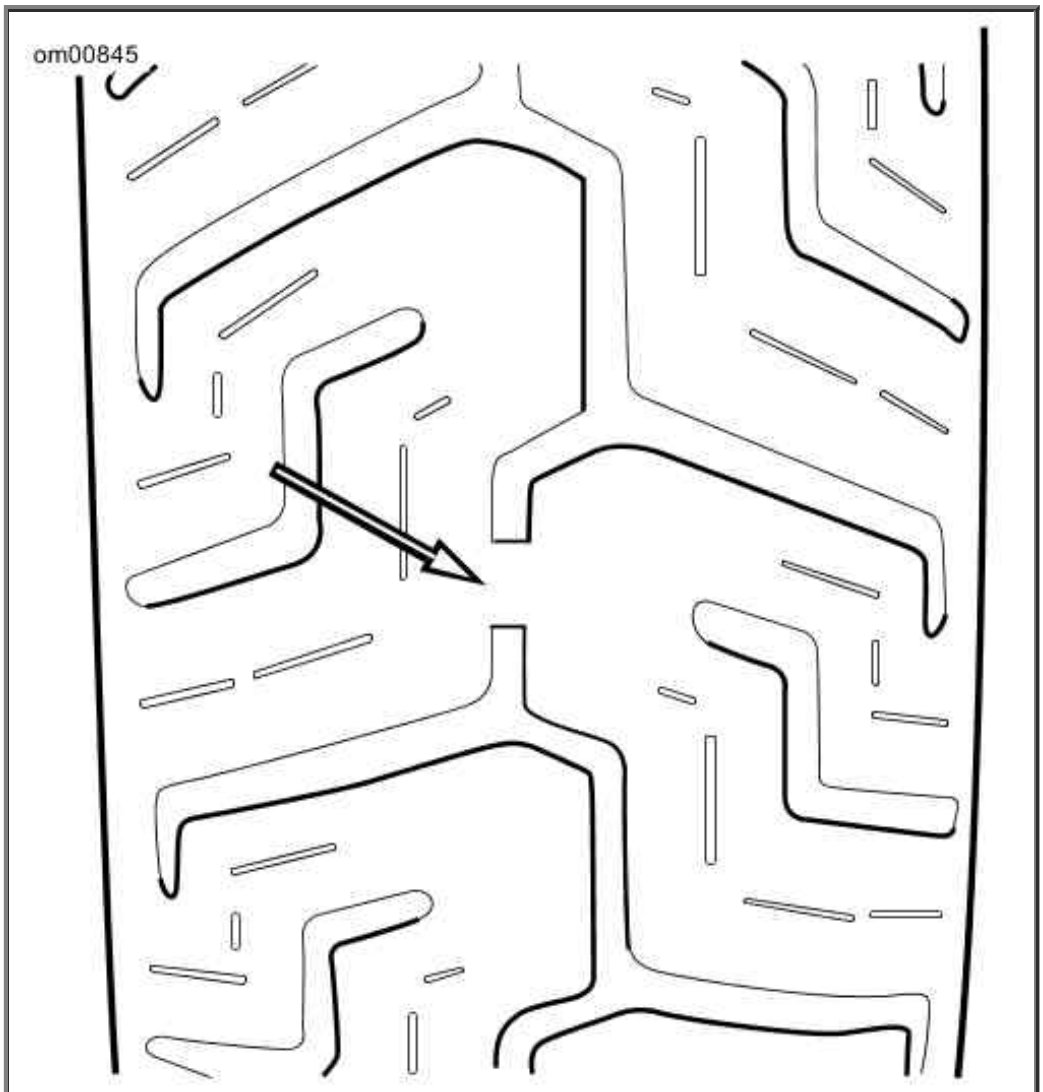

Dunlop Tire Wear Bar Appearance

Shock Absorbers

Inspect shock absorbers and rubber bushings for leaks and bushing deterioration at proper intervals.

⚠WARNING

Shock absorber cannot be serviced. Attempting service can cause an explosion, which could result in death or serious injury. (00602d)

- Do not refill, disassemble, puncture or expose shock to flames.
- Replacement and disposal should only be done by an authorized Harley-Davidson dealer.

Spark Plugs

⚠WARNING

Disconnecting spark plug cable with engine running can result in electric shock and death or serious injury. (00464b)

⚠CAUTION

Do NOT pull on any electrical wires. Pulling on electrical wires may damage the internal conductor causing high resistance, which may result in minor or moderate injury. (00168a)

Check the spark plugs at proper intervals. Refer to Regular Service Intervals: 2011 Softail Models.

1. Disconnect spark plug cables from plugs by pulling up on the molded connector caps.
2. Check spark plug type. Only use those spark plugs specified for your model motorcycle.
3. Check spark plug gap against specifications table.

   NOTE:

   *If a torque wrench is not available, tighten **new** spark plugs finger-tight and then tighten an additional one-quarter turn with a spark plug wrench.*

4. Always tighten to the proper torque. Spark plugs must be tightened to the torque specified for proper heat transfer. Refer to Electrical.
5. Connect each molded connector cap until the cap snaps firmly into place over the spark plug.

Ignition

The engine in your motorcycle has been designed specifically to achieve optimum fuel economy within exhaust emission controls. Factory programmed ignition characteristics provide maximum engine performance and driveability.

Air Cleaner

See Air Cleaner: Softail Models. The engine air cleaner is a paper/wire mesh air filter element.

Refer to Regular Service Intervals: 2011 Softail Models. Remove air cleaner cover and inspect filter element at proper intervals. If operated in dusty conditions, inspect more often.

The paper/wire mesh air filter element should be washed in lukewarm water with a mild detergent.

⚠WARNING

Compressed air can pierce the skin and flying debris from compressed air could cause serious eye injury. Wear safety glasses when working with compressed air. Never use your hand to check for air leaks or to determine air flow rates. (00061a)

- Allow filter to either air dry or blow it dry, from the inside, with low pressure air.
- Do not use an air cleaner filter oil on the Harley-Davidson paper/wire mesh air filter element.

CAUTION

Install air filter before running engine. Failure to do so can draw debris into the engine and could result in engine damage. (00207a)

Install baseplate gasket, air filter element, and bracket if removed. Tighten bracket screws to 40-60 in-lbs (4.5-6.8 Nm).

When installing air cleaner cover, apply a drop of LOCTITE THREADLOCKER 243 (blue) to the threads of the cover screw and tighten to 36-60 in-lbs (4.1-6.8 Nm).

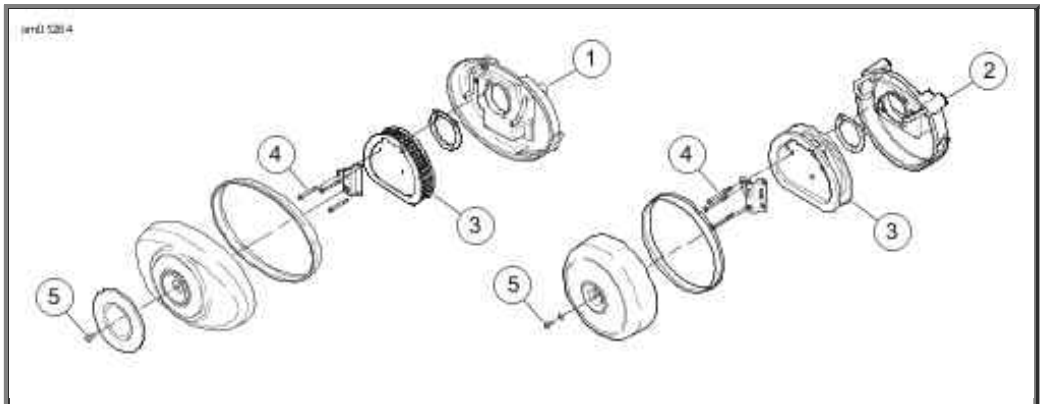

1. Air cleaner assembly (Softail models)
2. Air cleaner assembly (FXS and FLSTSB, domestic)
3. Air filter element
4. Bracket screws (3)
5. Cover screw

Air Cleaner: Softail Models

Headlamp Bulb Replacement: Single Headlight

⚠WARNING

Handle bulb carefully and wear eye protection. Bulb contains gas under pressure, which, if not handled carefully, could cause serious eye injury. (00062b)

CAUTION

When replacement is required, use only the specified sealed beam unit or bulb, available from a Harley-Davidson dealer. An improper wattage sealed beam or bulb, can cause charging system problems. (00209a)

If a headlamp bulb filament burns out, the bulb must be discarded and a **new** bulb installed. Refer to Bulb Chart for bulbs.

Bulb Removal

⚠WARNING

To prevent accidental vehicle start-up, which could cause death or serious injury, remove main fuse before proceeding. (00251b)

NOTE:

Make note of components during disassembly to aid in correct assembly.

1. Remove main fuse. See Headlamp Alignment
2. See Headlamp Bulbs: Single Headlight. Remove trim ring hardware (1). Remove trim

ring (2).

3. Remove mounting ring (3) and bumper, if equipped.
4. Disconnect headlamp connector (8) from bulb (5).
5. Remove rubber boot (6), if equipped, from back of headlamp lens (4).
6. Remove wire retaining clip (7) from headlamp base.
7. Remove bulb from headlamp assembly.
8. **For International Models Only:** Rotate boot (10) one-quarter turn and remove bulb assembly from housing. Pull position bulb (9) to remove from boot.

Bulb Installation

CAUTION

Never touch the quartz bulb. Fingerprints will etch the glass and decrease bulb life. Handle the bulb with paper or a clean, dry cloth. Failure to do so could result in bulb damage. (00210b)

NOTE:

*When installing a **new** bulb, be sure connector contacts are clean for good electrical contact.*

1. Install **new** bulb and assemble the headlamp components.
2. **For International Models Only:** Install **new** bulb in boot. Install boot in housing and rotate one-quarter turn.
3. Verify slots and tabs in headlamp and trim ring are aligned.
4. Install rubber boot with word TOP at the top of the headlamp lens assembly.
5. Connect the headlamp connector.
6. Install bumper, if equipped.
7. Install trim ring and hardware.
8. Install main fuse.

⚠WARNING

Be sure that all lights and switches operate properly before operating motorcycle. Low visibility of rider can result in death or serious injury. (00316a)

9. Turn ignition on and test for proper operation.
10. If necessary, align headlamp assembly. See Headlamp Alignment.

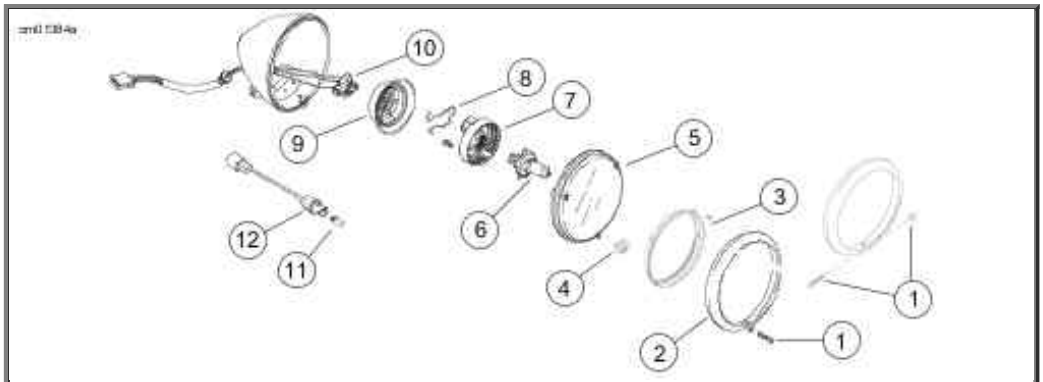

1. Trim ring hardware
2. Trim ring
3. Mounting ring
4. Bumper
5. Headlamp lens
6. Bulb
7. Base
8. Wire retaining clip
9. Rubber boot
10. Headlamp connector
11. Bulb, position - HDI models only
12. Boot - HDI models only

Headlamp Bulbs: Single Headlight

Headlamp Alignment

⚠WARNING

The automatic-on headlamp feature provides increased visibility of the rider to other motorists. Be sure headlamp is on at all times. Poor visibility of rider to other motorists can result in death or serious injury. (00030b)

NOTE:

Vehicles with multiple beam headlamps that are individually aimed should be adjusted so both lamps converge into one pattern.

1. Verify that front and rear tire inflation pressures are correct and that suspension is adjusted to the weight of the principal rider. See Specifications.

2. Fill fuel tank or add ballast to equal the weight of the fuel needed.

   NOTE:

   See Headlamp Alignment. To aid in properly placing the motorcycle, a perpendicular line (1) can be drawn on the floor. For best results, choose an area with minimum light.

3. Draw a vertical line (2) on the wall.

4. Position motorcycle so that front axle is 25 ft 7.6 m from wall.

   NOTE:

   As the weight of the rider will compress the suspension slightly, have a person whose

weight is approximately the same as that of the principal rider sit on the motorcycle.

5. With the vehicle laden and upright, point the front wheel straight forward at wall and measure the distance (4) from the floor to the center of the HIGH BEAM bulb.

6. Draw a horizontal line (5) through the vertical line on the wall that is 2.1 in 53.3 mm lower than the measured bulb centerline.

7. Verify headlamp alignment. With the motorcycle on, set the headlamp switch to HIGH beam.

    a. The center of the hot spot (brightest area of light beam) should be centered where the two lines intersect.

    b. Adjust headlamp alignment if necessary.

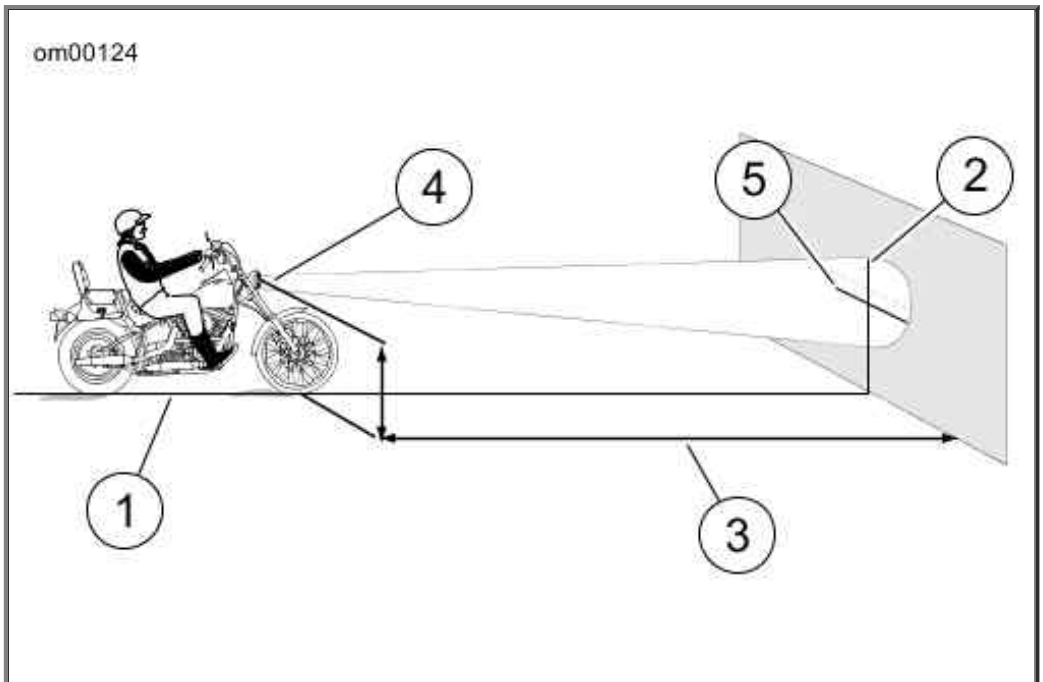

1. Perpendicular line
2. Vertical line
3. 25 ft (7.6 m)
4. High beam bulb centerline
5. Horizontal line 2.1 in (53.3 mm) lower than bulb centerline

Headlamp Alignment

Headlamp Adjustment

1. See Headlamp Adjustment: FLSTSB (FLSTSB) and Headlamp Adjustment: Softail Models Except FLSTSB (typical) (other models). Loosen horizontal adjustment fastener (2). Tilt headlamp left or right to direct light beam straight ahead.

2. Tighten horizontal adjustment fastener (2) to 30-35 ft-lbs (40.7-47.5 Nm).

3. Loosen vertical adjustment fastener (1). Tilt headlamp up or down in relationship to the horizontal line from the headlamp alignment inspection.

4. Tighten vertical adjustment fastener (1) to:

    a. **FXCWC:** 25-30 ft-lbs (33.9-40.7 Nm).

b. **FLSTSB:** 25-35 ft-lbs (33.9-47.5 Nm).

c. **FXS:** 30-35 ft-lbs (40.7-47.5 Nm).

d. **All other models:** 35-45 ft-lbs (47.5-61.0 Nm).

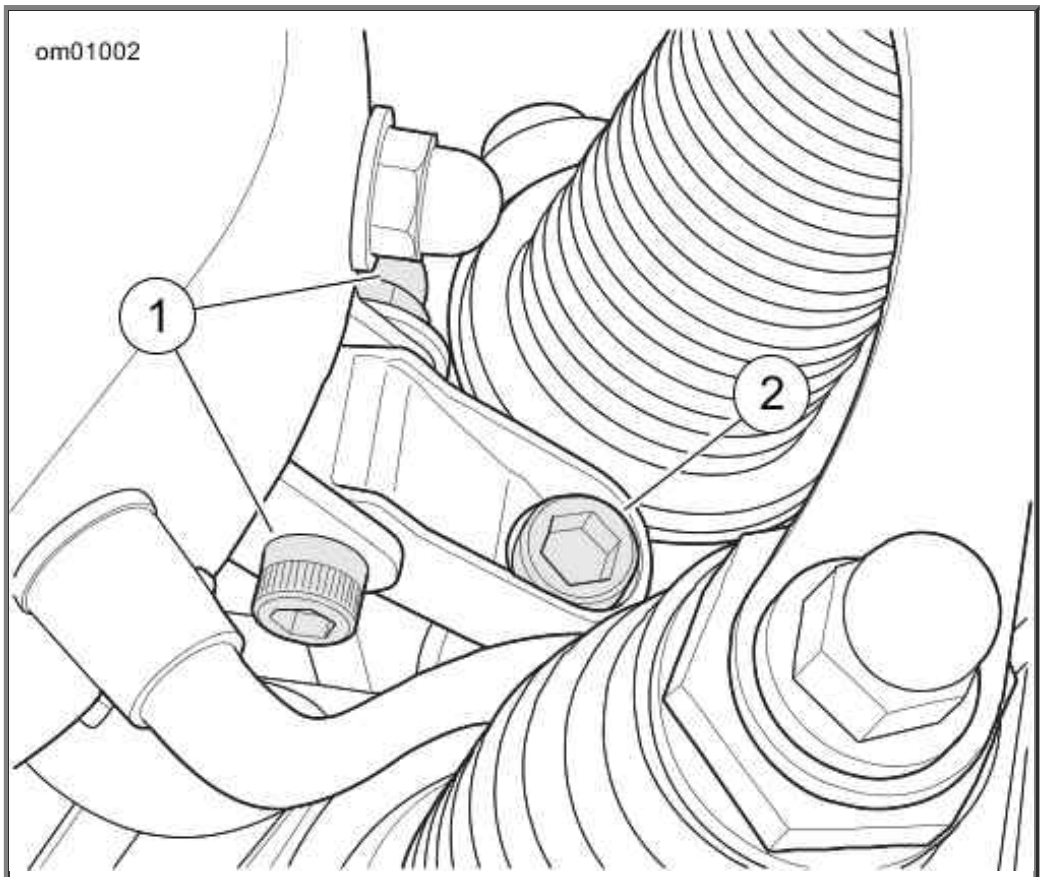

1. Vertical adjusting fastener (with acorn nut)
2. Horizontal adjusting fastener

Headlamp Adjustment: FLSTSB

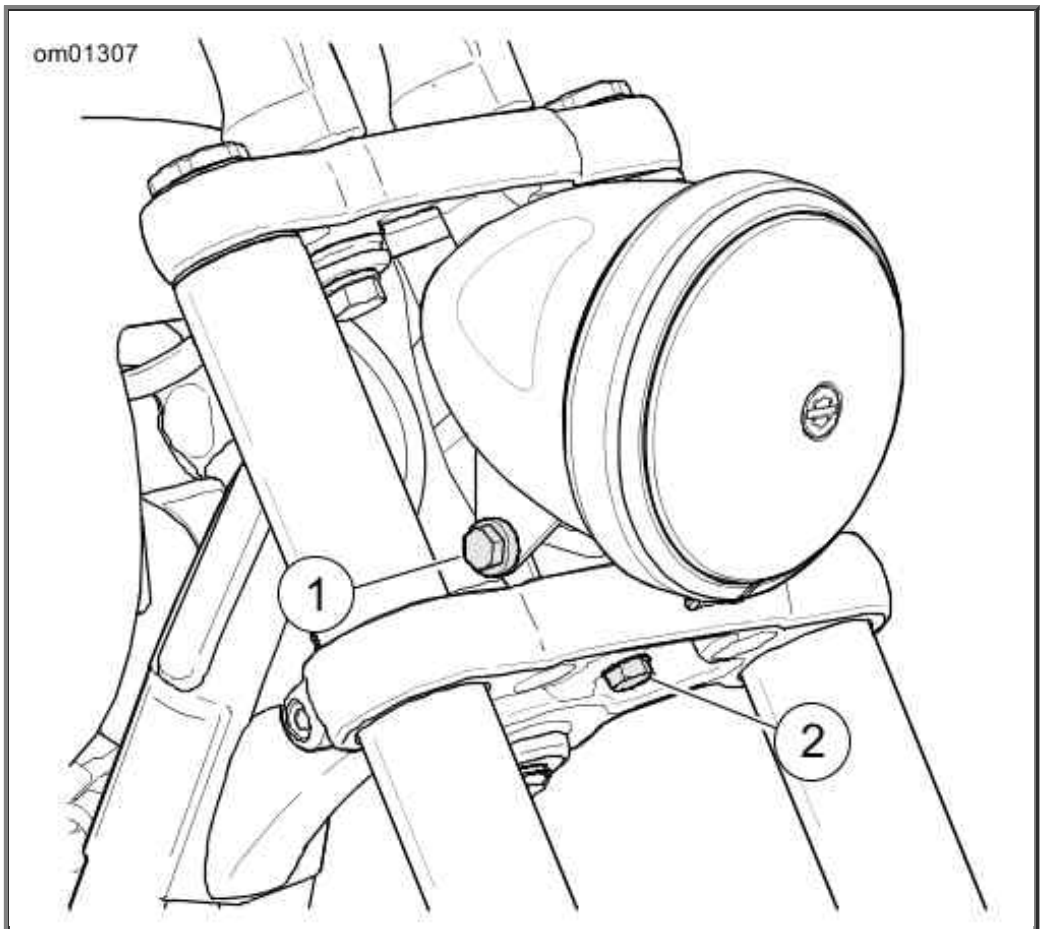

1. Vertical adjusting bolt
2. Horizontal adjusting bolt

Headlamp Adjustment: Softail Models

Except FLSTSB (typical)

LED Rear Turn Signal/Tail Lamps: FXCWC and International FXS Models

On FXCWC and international FXS models, the rear turn signal/tail lamps are LED assemblies with no replaceable bulbs. Caps on rear turn signals are not removable. See dealer or service manual for assembly replacement.

Turn Signal Bulb Replacement: Bullet Style

1. See Lens Cap Notch. Insert a coin or the blade of a small screwdriver into the notch at the bottom of the lens cap. Carefully twist until the lens cap pops out of the lamp housing.
2. Push bulb in and rotate counterclockwise. Pull bulb from socket.
3. Inspect condition of electrical contacts in socket. If necessary, clean with a small wire brush and electrical contact cleaner.
4. Coat base of **new** bulb with ELECTRICAL CONTACT LUBRICANT (Part No. 99861-02).
5. Align pins on bulb with pin guides in bulb socket. Push **new** bulb in and turn clockwise to lock in place.
6. Snap lens cap back into the lamp holder. Rotate lens to position notch at bottom of lamp.

⚠WARNING

Be sure that all lights and switches operate properly before operating motorcycle. Low visibility of rider can result in death or serious injury. (00316a)

7. Turn ignition on and test for proper operation.

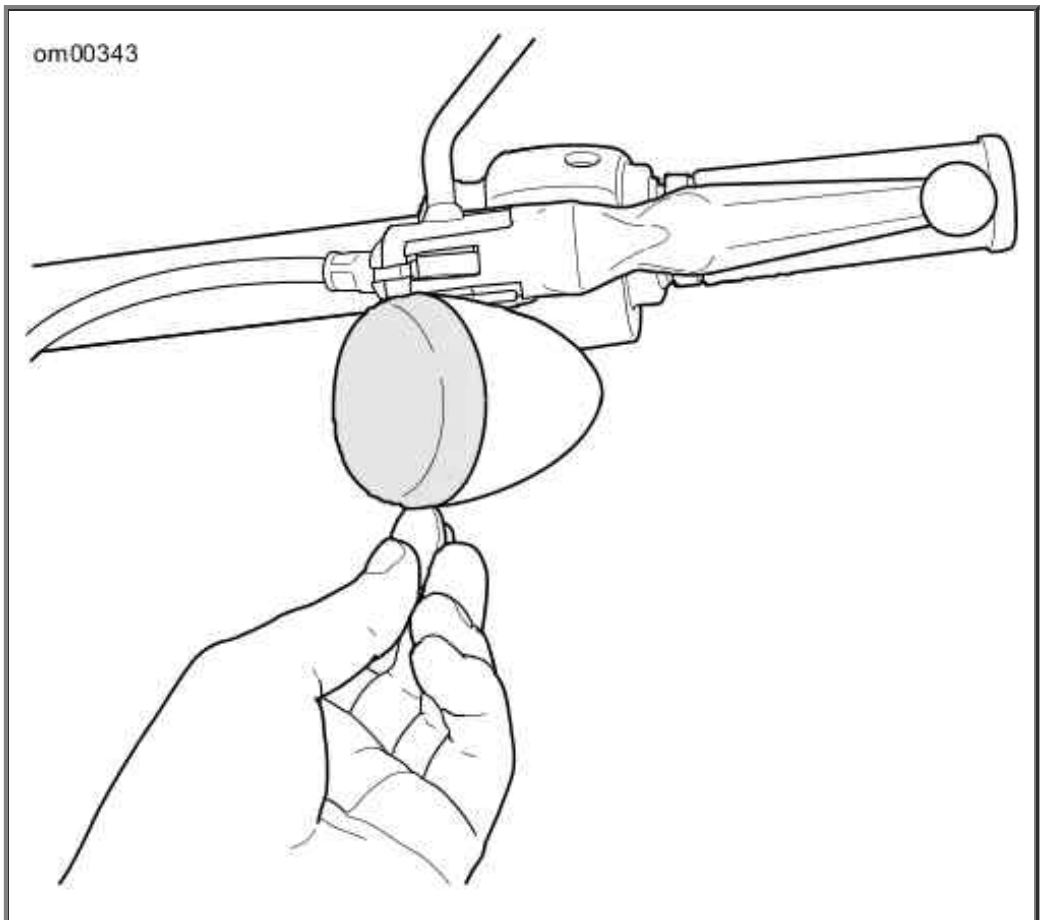

Lens Cap Notch

Turn Signal Bulb Replacement: Flat Lens Style

1. See Turn Signal Lamp Assembly: Flat Lens Style. Remove two screws to release lens from lamp housing.
2. Push bulb in and rotate counterclockwise to remove bulb from socket.
3. Inspect condition of electrical contacts in socket. If necessary, clean with a small wire brush and electrical contact cleaner.
4. Liberally apply ELECTRICAL CONTACT LUBRICANT (Part No. 99861-02) to contacts in socket and at bottom of **new** bulb.
5. Orient index pins on **new** bulb with pin guides inside bulb socket. Push bulb in and turn clockwise to lock in place.
6. Seat lens in lamp and install two screws.

⚠WARNING

Be sure that all lights and switches operate properly before operating motorcycle. Low visibility of rider can result in death or serious injury. (00316a)

7. Test turn signal operation.

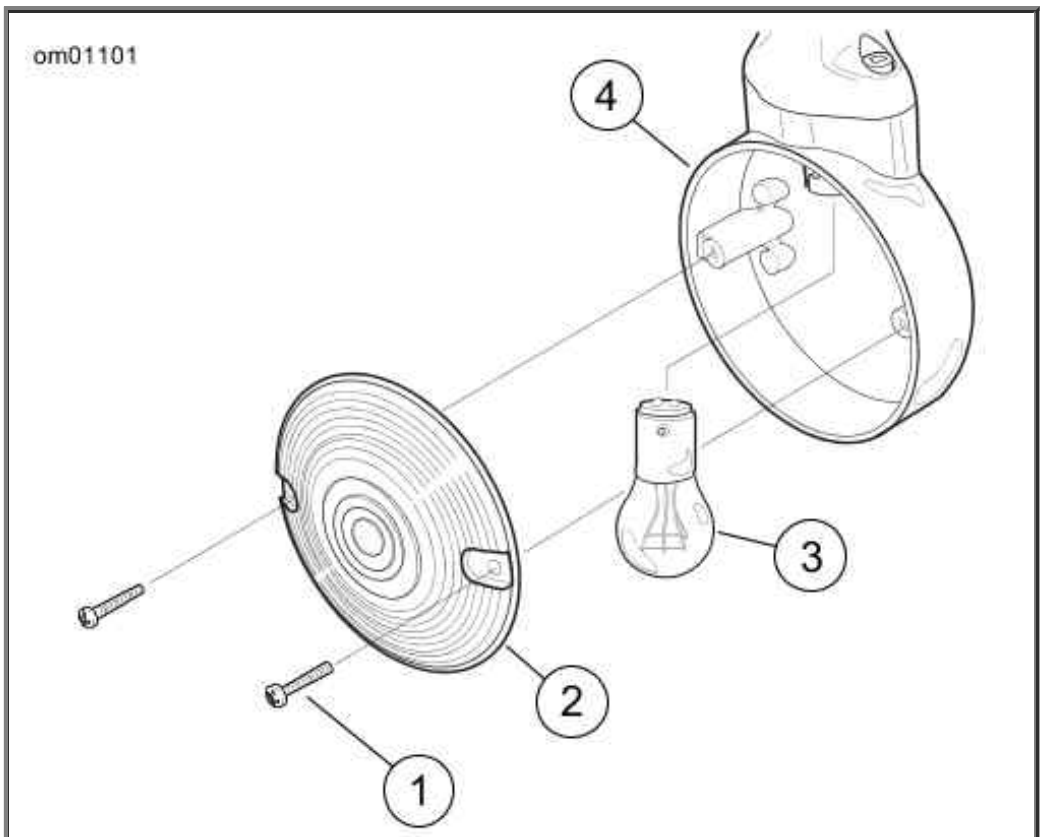

1. Screws (2)
2. Lens
3. Bulb
4. Lamp housing

Turn Signal Lamp Assembly: Flat Lens Style

Tail Lamp Bulb Replacement: Standard Style

1. See Tail Lamp Assembly. Make certain ignition switch is turned off.
2. Remove two screws and lens from base.

   NOTE:

   For ease of bulb removal, the 4-Pin multilock connector can be removed from circuit board.

3. Remove (pull) bulb assembly from lens. Remove bulb from socket.
4. Coat base of **new** bulb with ELECTRICAL CONTACT GREASE (Part No. 99861-02). Install **new** bulb in socket.
5. Install (push) bulb assembly to lens.
6. If removed connect 4-Pin multilock connector to circuit board.

7. Install lens to base with two screws. Tighten screws to 20-24 in-lbs (2.3-2.7 Nm).

⚠WARNING

Be sure that all lights and switches operate properly before operating motorcycle. Low visibility of rider can result in death or serious injury. (00316a)

8. Turn ignition on and test for proper tail lamp operation.

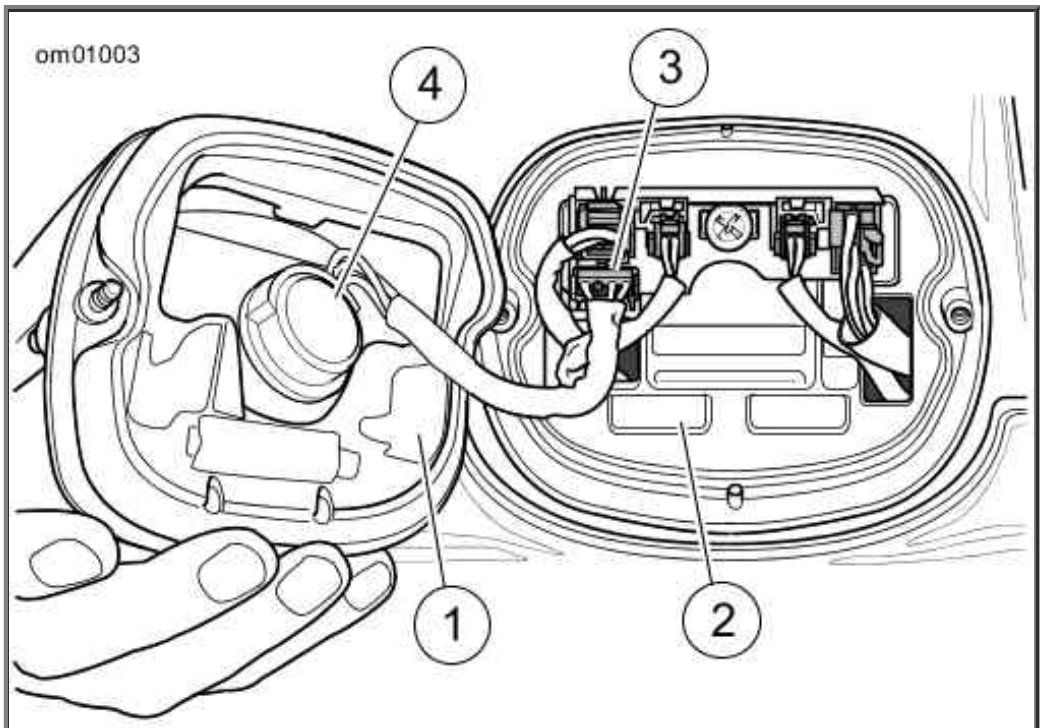

1. Lens
2. Base
3. 4-pin multilock connector
4. Bulb socket

Tail Lamp Assembly

Tail Lamp Bulb Replacement: Tombstone Style

1. See Tail Lamp Assembly: Tombstone Style. Make certain ignition switch is turned off.
2. Remove three screws (1) to detach the tail lamp assembly (2) from base.
3. Push bulb (3) into socket and rotate one-quarter turn counterclockwise. Pull bulb from socket.
4. Inspect condition of electrical contacts in socket. If necessary, clean with a small wire brush and electrical contact cleaner.
5. Coat base of **new** bulb with ELECTRICAL CONTACT GREASE (Part No. 99861-90).
6. Orient index pins on **new** bulb with pin guides inside bulb socket. Push bulb in and turn clockwise to lock in place.
7. Install tail lamp assembly to base with three screws. Tighten screws to 20-24 in-lbs (2.3-2.7

Nm).

⚠WARNING

Be sure that all lights and switches operate properly before operating motorcycle. Low visibility of rider can result in death or serious injury. (00316a)

8. Turn ignition on and test for proper tail lamp operation.

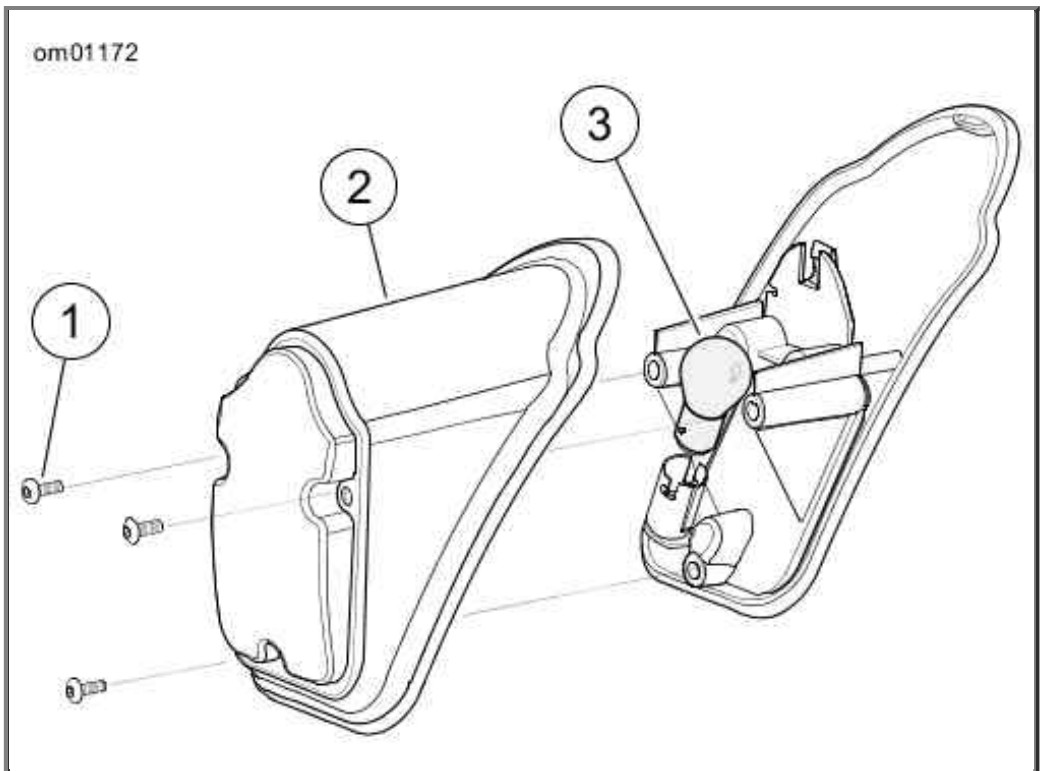

1. Screws (3)
2. Tail lamp assembly
3. Bulb

Tail Lamp Assembly: Tombstone Style

Alternator/Voltage Regulator

Charging Rate

The alternator output is controlled and changed to direct current by the voltage regulator.

- The voltage regulator increases charging rate when battery is low or lamps are lit.
- The voltage regulator decreases charging rate when battery charge is up.

CAUTION

It is possible to overload your vehicle's charging system by adding too many electrical accessories. If the combined electrical accessories operating at any one time consume more electrical current than the vehicle's charging system can produce, the electrical consumption can discharge the

battery and cause damage to the vehicle's electrical system. See an authorized Harley-Davidson dealer for advice about the amount of current consumed by additional electrical accessories or for necessary wiring changes. (00211c)

NOTES:

- *This unit requires no interval attention. If any electrical system trouble is experienced that might be traceable to the alternator or voltage regulator, the motorcycle should be taken to a Harley-Davidson dealer who has the necessary electrical testing equipment to give the required attention.*
- *For model specific information regarding the voltage regulator, refer to the appropriate Service Manual or see a Harley-Davidson dealer.*

Battery: General

Type

Your motorcycle uses a permanently sealed, maintenance-free, lead/calcium and sulfuric acid battery. All batteries are shipped precharged and ready to be put into service. Do not attempt to open the battery for any reason.

Antidotes for Battery Acid

CONTACT	TREATMENT
External	Flush with water.
Internal	Drink large quantities of milk or water, followed by milk of magnesia, vegetable oil or beaten eggs. Get immediate medical attention.
Eyes	Flush with water. Get immediate medical attention.

⚠WARNING

Batteries contain sulfuric acid, which could cause severe burns to eyes and skin. Wear a protective face shield, rubberized gloves and protective clothing when working with batteries. KEEP BATTERIES AWAY FROM CHILDREN. (00063a)

⚠WARNING

Explosive hydrogen gas, which escapes during charging, could cause death or serious injury. Charge battery in a well-ventilated area. Keep open flames, electrical sparks and smoking materials away from battery at all times. KEEP BATTERIES AWAY FROM CHILDREN. (00065a)

⚠WARNING

Batteries, battery posts, terminals and related accessories contain lead and lead compounds, and other chemicals known to the State of California to cause cancer, and birth defects or other reproductive harm. Wash hands after handling. (00019e)

⚠WARNING

Never remove warning label attached to top of battery. Failure to read and understand all precautions contained in warning, could result in death or serious injury. (00064a)

1. Contents are corrosive
2. Wear safety glasses
3. Contents are explosive
4. Keep flames away
5. Read instructions
6. Keep away from children

Battery Warning Label

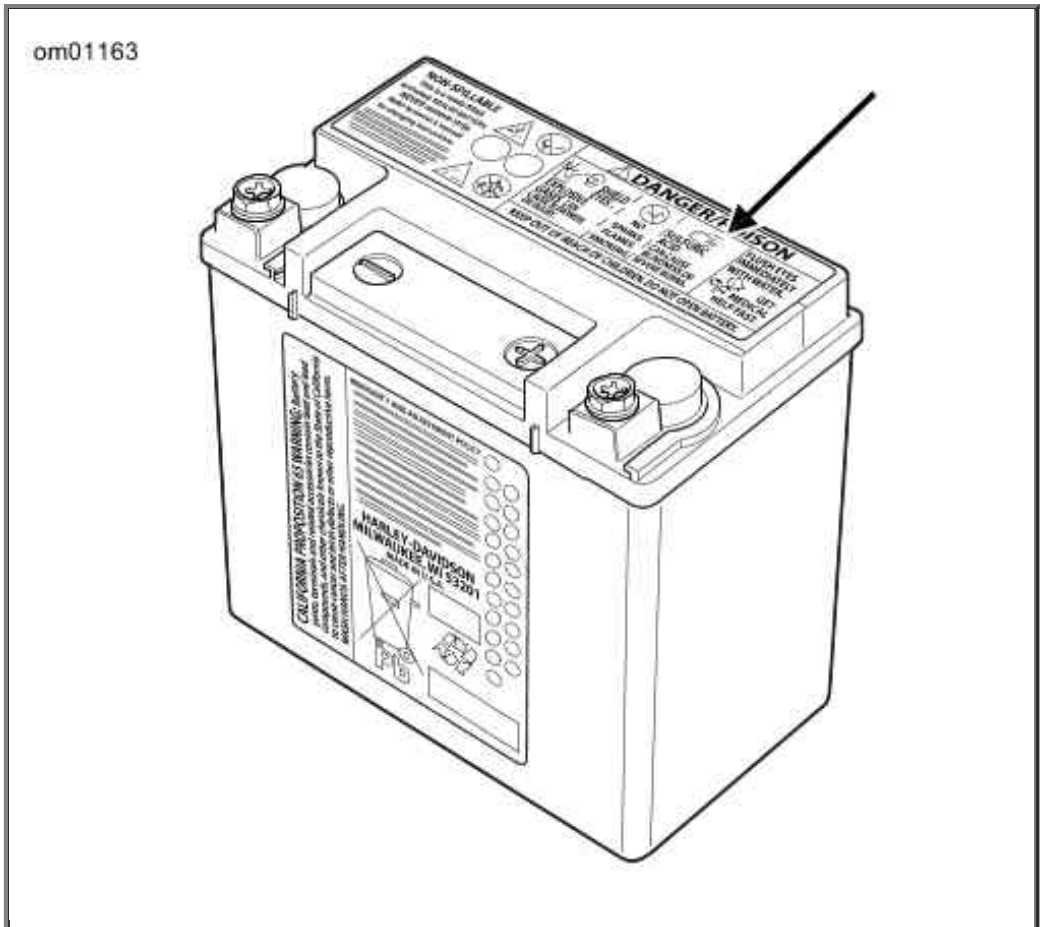

Battery Warning Label

Voltmeter Test

Refer to Voltmeter Test. The voltmeter test provides a general indicator of battery condition. Check the voltage of the battery to verify that it is in a 100 percent fully-charged condition. If the open circuit (disconnected) voltage reading is below 12.6 V, charge the battery and then re-check the voltage after the battery has set for one to two hours.

Voltmeter Test

READING IN VOLTS	PERCENT OF CHARGE
12.7	100
12.6	75
12.3	50
12.0	25
11.8	0

Cleaning and Inspection

Battery top must be clean and dry. Dirt and electrolyte on top of the battery can cause battery to self-discharge.

1. Clean battery top.

2. Clean cable connectors and battery terminals using a wire brush or fine grit sandpaper to remove any oxidation.

3. Inspect and clean the battery screws, clamps and cables. Check for breakage, loose connections and corrosion.

4. Check the battery posts for melting or damage caused by overtightening.

5. Inspect the battery for discoloration, a raised top or a warped or distorted case. This might indicate that the battery has been frozen, overheated or overcharged.

6. Inspect the battery case for cracks or leaks.

Charging

Never charge a battery without first reviewing the instructions for the charger being used. In addition to the manufacturer's instructions, follow these general safety precautions.

Charge the battery if any of the following conditions exist:

- Vehicle lamps appear dim.
- Electric starter sounds weak.
- Battery has not been used for an extended period of time.

⚠WARNING

Explosive hydrogen gas, which escapes during charging, could cause death or serious injury. Charge battery in a well-ventilated area. Keep open flames, electrical sparks and smoking materials away from battery at all times. KEEP BATTERIES AWAY FROM CHILDREN. (00065a)

⚠WARNING

Batteries contain sulfuric acid, which could cause severe burns to eyes and skin. Wear a protective face shield, rubberized gloves and protective clothing when working with batteries. KEEP BATTERIES AWAY FROM CHILDREN. (00063a)

1. Perform a voltmeter test to determine the state of charge. If battery needs to be charged, proceed to the next step.

2. Place the battery on a level surface.

⚠WARNING

Unplug or turn OFF battery charger before connecting charger cables to battery. Connecting cables with charger ON can cause a spark and battery explosion, which could result in death or serious injury. (00066a)

⚠WARNING

Connect positive (+) battery cable first. If positive (+) cable should contact ground with negative (-) cable connected, the resulting sparks can cause a battery explosion, which could result in death or serious injury. (00068a)

⚠WARNING

Disconnect negative (-) battery cable first. If positive (+) cable should contact ground with negative (-) cable connected, the resulting sparks can cause a battery explosion, which could result in death or serious injury. (00049a)

CAUTION

Do not reverse the charger connections described in the following steps or the charging system of the motorcycle could be damaged. (00214a)

NOTES:

- *The figures in 19 Amp-Hour Battery Charging Rates/Times (Approximate) show typical charging times. Charge times may vary. When using automatic chargers, allow the charger to determine when charging is complete.*
- *Do not use chargers with excessively high voltage designed for flooded batteries or excessively high current designed for much larger batteries. Charging should be limited to no more than 5 amps at no more than 14.6 volts.*

3. Connect the red battery charger lead to positive (+) terminal of the battery.

4. Connect the black battery charger lead to negative (-) terminal of the battery.

   NOTE:

   If the battery is still in the vehicle, connect the negative lead to the chassis ground. Make sure that the ignition and all electrical accessories are turned off.

5. Step away from the battery and turn on the charger.

⚠WARNING

Unplug or turn OFF battery charger before disconnecting charger cables from battery. Disconnecting clamps with charger ON can cause a spark and battery explosion, which could result in death or serious injury. (00067a)

6. After the battery is fully charged, turn OFF the charger and disconnect the black battery charger lead to the negative (-) terminal of the battery.

7. Disconnect the red battery charger lead to the positive (+) terminal of the battery.

8. Mark the charging date on the battery.

19 Amp-Hour Battery Charging Rates/Times (Approximate)

READING (VOLTS)	PERCENT OF CHARGE	5 AMP CHARGER	2 AMP CHARGER	1.5 AMP CHARGER	0.75 AMP CHARGER
12.7	100	-	-	-	-
12.6	75	2 hours	3 hours 24 minutes	4 hours 12 minutes	7 hours 18 minutes
12.3	50	2 hours 54 minutes	5 hours 48 minutes	7 hours 18 minutes	13 hours 42 minutes
12.0	25	3 hours 54 minutes	8 hours 6 minutes	10 hours 30 minutes	20 hours
11.8	0	4 hours 48 minutes	10 hours 30 minutes	13 hours 42 minutes	26 hours 18 minutes

Storage

If the motorcycle will not be operated for several months, such as during the winter season, remove the battery from the motorcycle and fully charge.

If the motorcycle is to be stored with the battery installed, it will be necessary to connect a battery tender to maintain charge. See an authorized dealer for more information.

A battery that is removed from the vehicle is affected by self-discharge. A battery that is stored in the vehicle is affected by both self-discharge and, more significantly, parasitic loads. Parasitic loads occur from things like diode leakage and maintaining computer memory with the vehicle off.

- Batteries self-discharge at a faster rate at higher ambient temperatures.
- To reduce the self-discharge rate, store battery in a cool, dry place.
- Charge the battery once per month if stored in the vehicle.
- Charge the battery every three months if stored out of the vehicle.

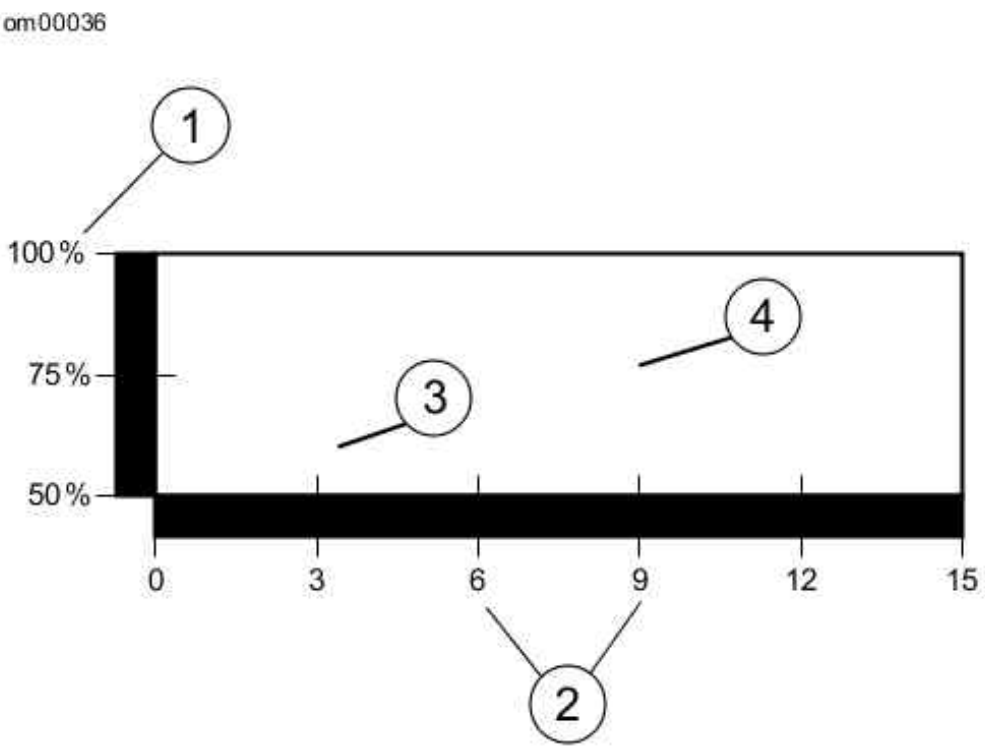

1. Capacity
2. Months of non-use
3. Measured at 105 °F (40 °C)
4. Measured at 77 °F (25 °C)

Effective Rate of Temperature on Battery Self-discharging Rate

Battery

Disconnection and Removal

⚠WARNING

Disconnect negative (-) battery cable first. If positive (+) cable should contact ground with negative (-) cable connected, the resulting sparks can cause a battery explosion, which could result in death or serious injury. (00049a)

1. On FXCWC model, lift the rear of the seat toward fuel tank. For all other models, remove the seat. See Seats and follow procedure for the appropriate model.
2. See Battery Cover Removal Slot: FXCWC. On FXCWC model, lift battery cover from frame and remove.
3. See Frame Fairing: FLSTSB Models. On FLSTSB model, remove frame fairing.
    a. Remove thumbscrew from frame fairing.
    b. Lift rear of frame fairing. Raise fairing over the seat spring mounting pins.

c. Pull fairing to the rear and remove.

4. If equipped with security system siren, turn the ignition switch ON with the hands-free fob present to disarm the security system.

5. See Battery: Softail Models. Loosen bolt and remove battery negative cable (black) from battery negative (-) terminal.

6. Loosen bolt and remove battery positive cable (red) from battery positive (+) terminal.

7. Lift battery from battery box within oil tank cavity.

Installation and Connection

CAUTION

Do not over-tighten bolts on battery terminals. Use recommended torque values. Over-tightening battery terminal bolts could result in damage to battery terminals. (00216a)

⚠WARNING

Connect positive (+) battery cable first. If positive (+) cable should contact ground with negative (-) cable connected, the resulting sparks can cause a battery explosion, which could result in death or serious injury. (00068a)

⚠WARNING

Do not allow positive (+) battery cable to contact ground with negative (-) cable connected. Resulting sparks can cause a battery explosion, which could result in death or serious injury. (00069a)

1. Place the fully charged battery into the battery box located within oil tank cavity, terminal side forward.

2. Attach battery positive cable (+) (red) to battery positive (+) terminal.

3. Tighten fastener to 60-70 in-lbs (6.8-7.9 Nm).

4. Attach battery negative cable (black) to battery negative (-) terminal.

5. Tighten fastener to 60-70 in-lbs (6.8-7.9 Nm).

CAUTION

Keep battery clean and lightly coat terminals with petroleum jelly to prevent corrosion. Failure to do so could result in damage to battery terminals. (00217a)

6. Apply a light coat of petroleum jelly or corrosion retardant material to both battery terminals.

7. See Battery Cover Removal Slot: FXCWC. On FXCWC model, insert battery cover tabs into frame.

8. See Frame Fairing: FLSTSB Models. On FLSTSB model, install frame fairing.

   a. Insert fairing tab in frame bracket at the base of the fuel tank.

   b. Lower fairing holes over the seat spring mounting pins.

   c. Hand-tighten the thumbscrew.

⚠WARNING

After installing seat, pull upward on seat to be sure it is locked in position. While riding, a loose seat can shift causing loss of control, which could result in death or serious injury. (00070b)

9. On FXCWC model, lower seat and press down to engage locating pins. On all other models, install seat. See Seats and follow procedure for the appropriate model.

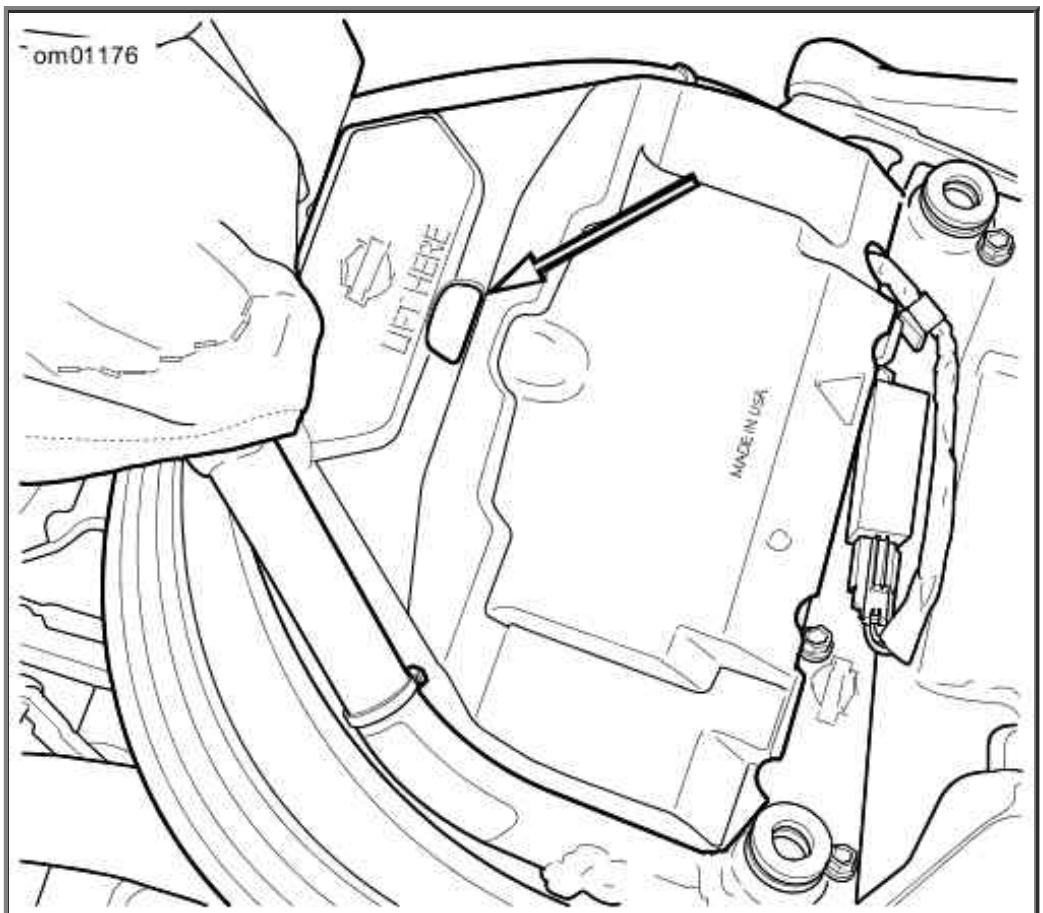

Battery Cover Removal Slot: FXCWC

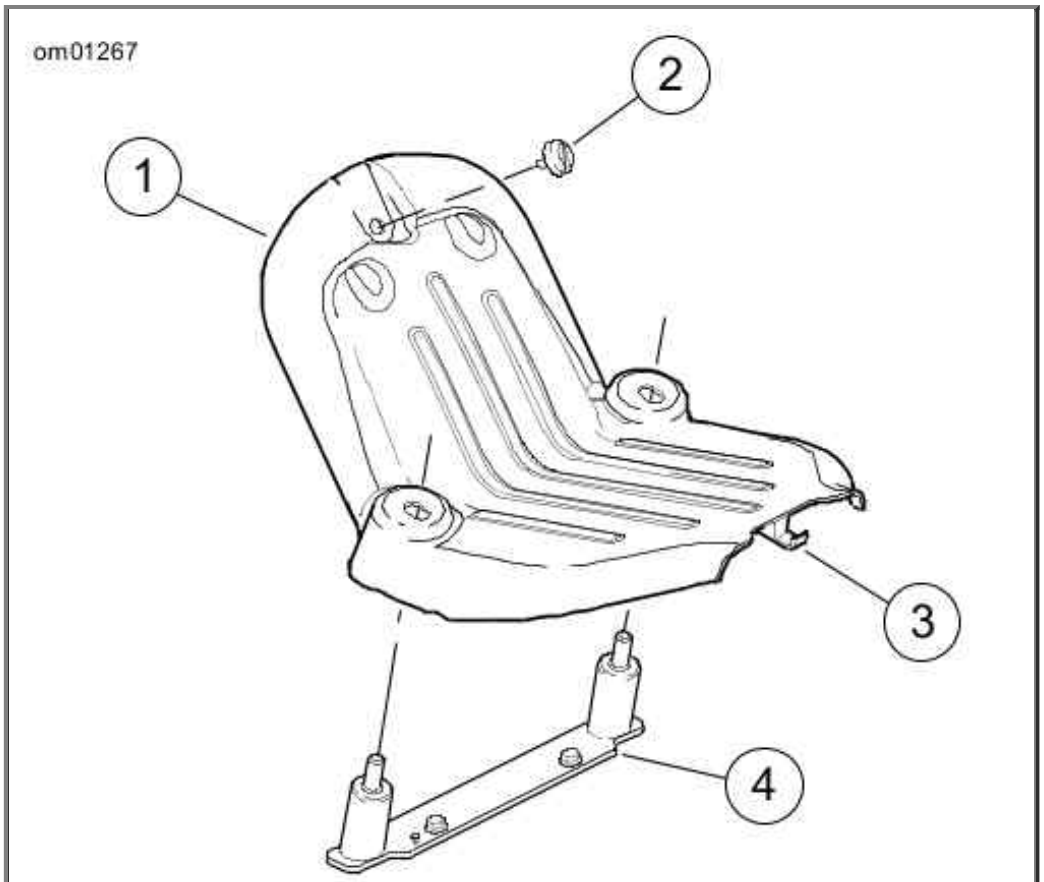

1. Frame fairing
2. Thumbscrew
3. Tab
4. Seat spring mounting bracket

Frame Fairing: FLSTSB Models

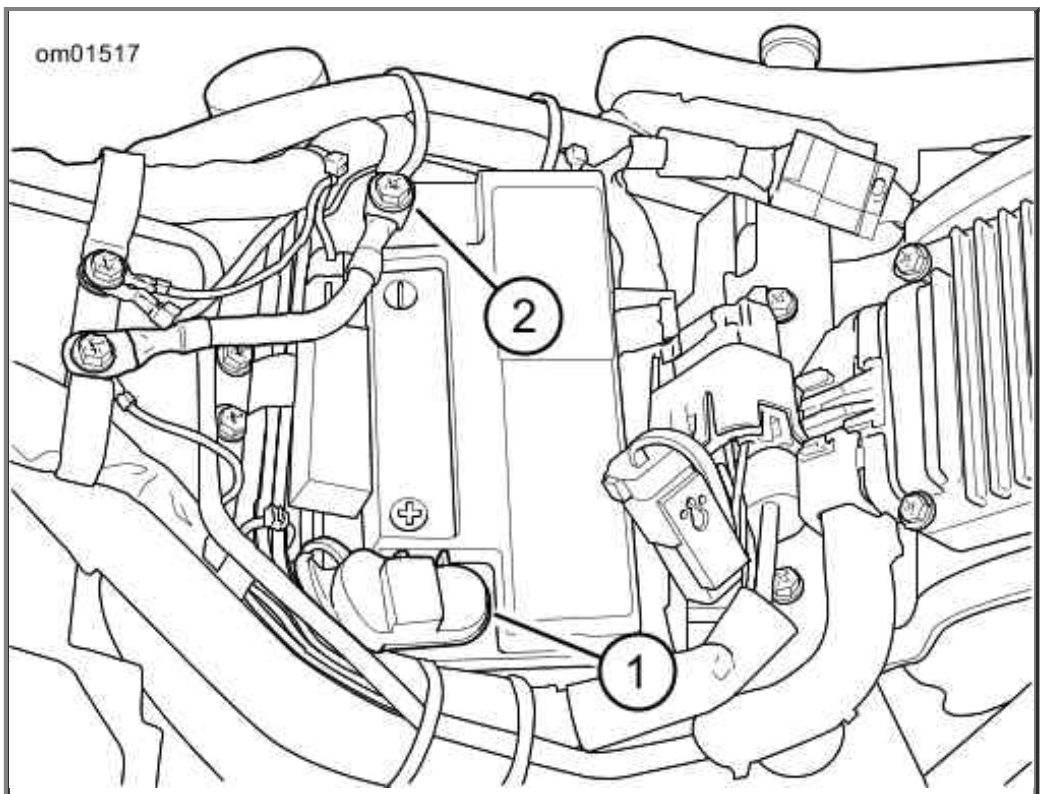

1. Positive (+) terminal
2. Negative (-) terminal

Battery: Softail Models

Jump Starting

Jump starting a motorcycle is typically not recommended. However, there may be circumstances when it is necessary to do so. If a jump-start is necessary, use the following procedure.

⚠WARNING

Be sure jumper cables touch only appropriate battery terminals or ground. Allowing jumper cables to touch each other can result in sparks and a battery explosion, which could result in death or serious injury. (00072a)

⚠WARNING

Explosive hydrogen gas, which escapes during charging, could cause death or serious injury. Charge battery in a well-ventilated area. Keep open flames, electrical sparks and smoking materials away from battery at all times. KEEP BATTERIES AWAY FROM CHILDREN. (00065a)

CAUTION

Be sure both vehicles have the same battery voltage when jump starting. Connecting vehicles with different system voltages can result in vehicle damage. (00220c)

NOTES:

- *This procedure presumes the BOOSTER battery is in another vehicle. DO NOT jump start from a running booster vehicle. The high output charging systems on some vehicles can damage the electrical components on the motorcycle.*
- *Make sure the motorcycle and the BOOSTER vehicle are not touching one another.*

1. Turn off all unnecessary lamps and accessories.

Positive Cable

2. See Jump Start Cable Connections. Connect one end of a jumper cable to the DISCHARGED battery positive (+) terminal (1).
3. Connect the other end of the same cable to the BOOSTER battery positive (+) terminal (2).

Negative Cable

⚠WARNING

Do not connect negative (-) cable to or near the discharged battery negative (-) terminal. Doing so could cause a spark and explosion, which could result in death or serious injury. (00073a)

4. Connect one end of a jumper cable to the BOOSTER battery negative (-) terminal (3).

CAUTION

Do not connect the negative (-) cable to painted or chrome parts. Doing so could result in discoloration at the attachment point. (00221a)

5. Connect other end of the same cable (4) to a safe ground, (away from the DISCHARGED battery).

6. Start motorcycle.

7. Disconnect cables in reverse order of Steps 2, 3, 4, 5; that is: Steps 5, 4, 3, 2.

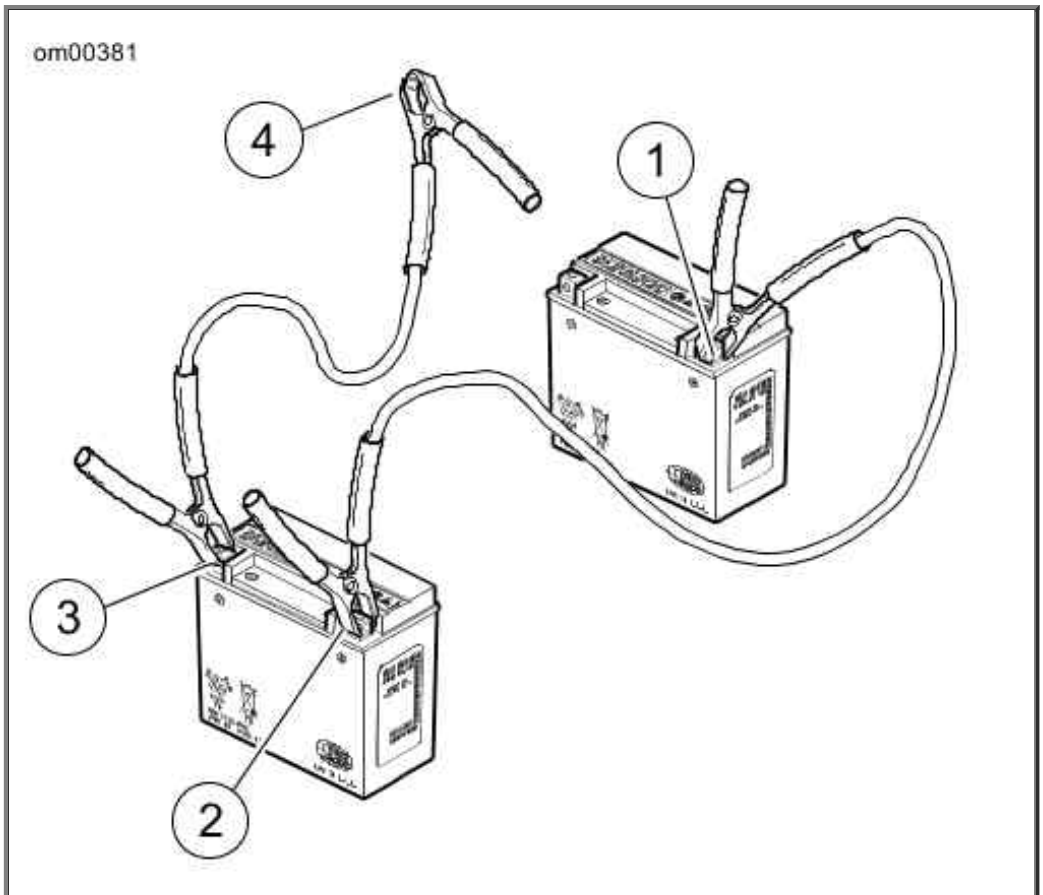

1. Discharged battery positive (+) terminal
2. Booster battery positive (+) terminal
3. Booster battery negative (-) terminal
4. Ground

Jump Start Cable Connections

Fuses

Fuses

See Fuse Block. The electrical circuits are protected by three fuses. Individual vehicle circuits are

protected by the Body Control Module (BCM).

Main (1): A 40A fuse that protects all the circuits including those protected by the 15A Battery fuse. Failure of this fuse will cause the motorcycle to stop running. See a Harley-Davidson dealer.

P&A (2): A 15A fuse protects the circuits of any installed accessories.

Battery (3): A 15A fuse that protects all the circuits. If the battery fuse fails while the engine is running, the engine will continue to run and critical circuits like the ABS brakes will continue to function. The failure of this fuse will trigger a diagnostic code. See a Harley-Davidson dealer.

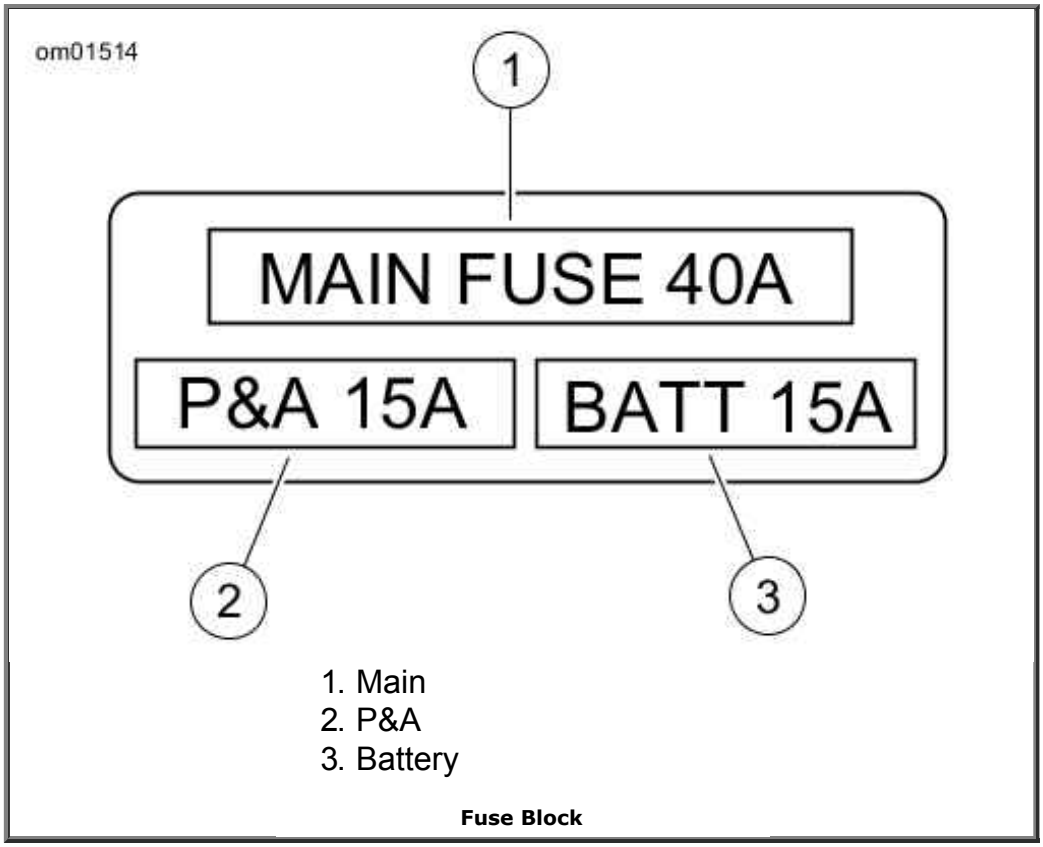

Fuse Block

Removal

1. If equipped with security system siren, turn the ignition to ON with the fob present to disarm the security system.

2. **All Models except FXCWC:** Remove the seat. See Seats

   FXCWC: See Battery Cover Removal Slot: FXCWC. Lift the rear of the seat toward fuel tank and remove the battery cover.

3. **FLSTSB:** See Frame Fairing: FLSTSB Models. Remove the frame fairing.

   a. Remove thumbscrew from frame fairing.

   b. Lift rear of frame fairing. Raise fairing over the seat mounting pins.

   c. Pull fairing to the rear and remove.

4. Disconnect and remove battery negative (-) cable (black) from battery negative (-) terminal.

5. See Fuse Block Location. Pull cover off fuse block.

6. See Fuse Block. Remove suspect fuse.

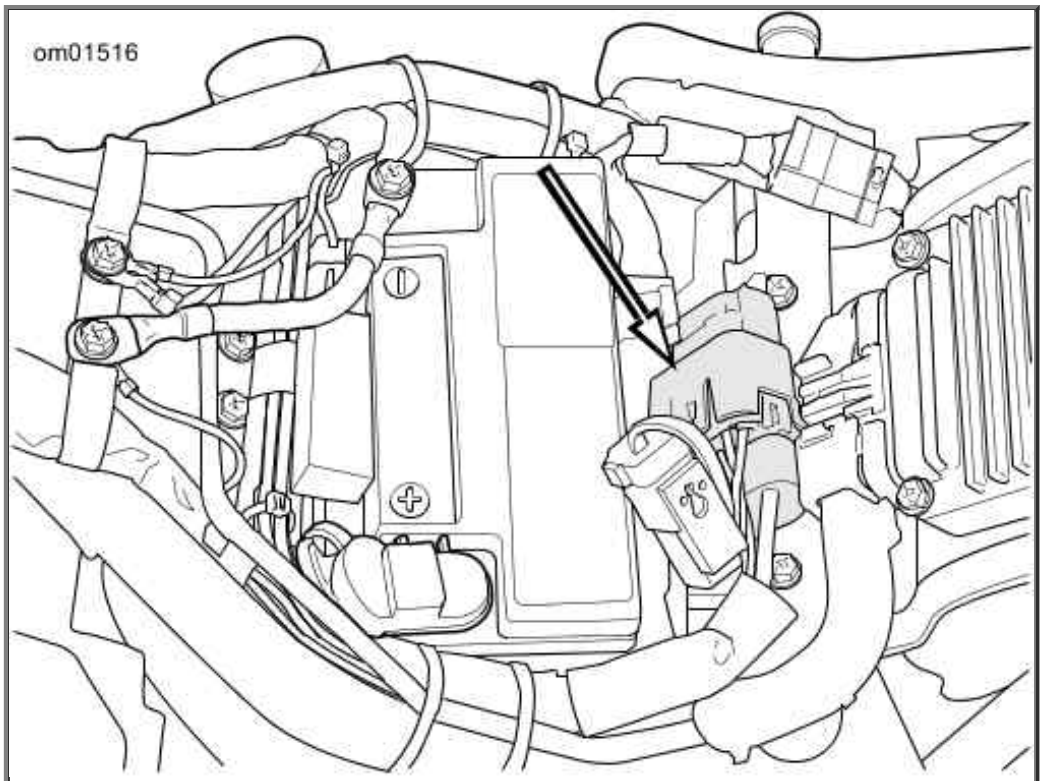

Fuse Block Location

Installation

CAUTION

Always use replacement fuses that are of the correct type and amperage rating. Use of incorrect fuses can result in damage to electrical systems. (00222a)

1. Install **new** fuse.
2. Place cover on fuse block.
3. Install battery negative cable (black) to battery negative (-) terminal. Tighten fastener to 60-70 in-lbs (6.8-7.9 Nm).
4. **FLSTSB:** See Frame Fairing: FLSTSB Models. Install frame fairing.
   a. Insert fairing tab in frame bracket at the base of the fuel tank.
   b. Lower fairing holes over the seat mounting pins.
   c. Hand-tighten the thumbscrew.

⚠WARNING

After installing seat, pull upward on seat to be sure it is locked in position. While riding, a loose seat can shift causing loss of control, which could result in death or

serious injury. (00070b)

5. **All Models except FXCWC:** Install seat. See Seats.

   FXCWC: Install the battery cover, lower seat and press down to engage locating pins.

Seats

General

See Seat Tongue (typical) and Frame Back. Softail motorcycles (except FXCWC and FLSTSB) have a tongue underneath the seat that slides into a slot in the back end of frame.

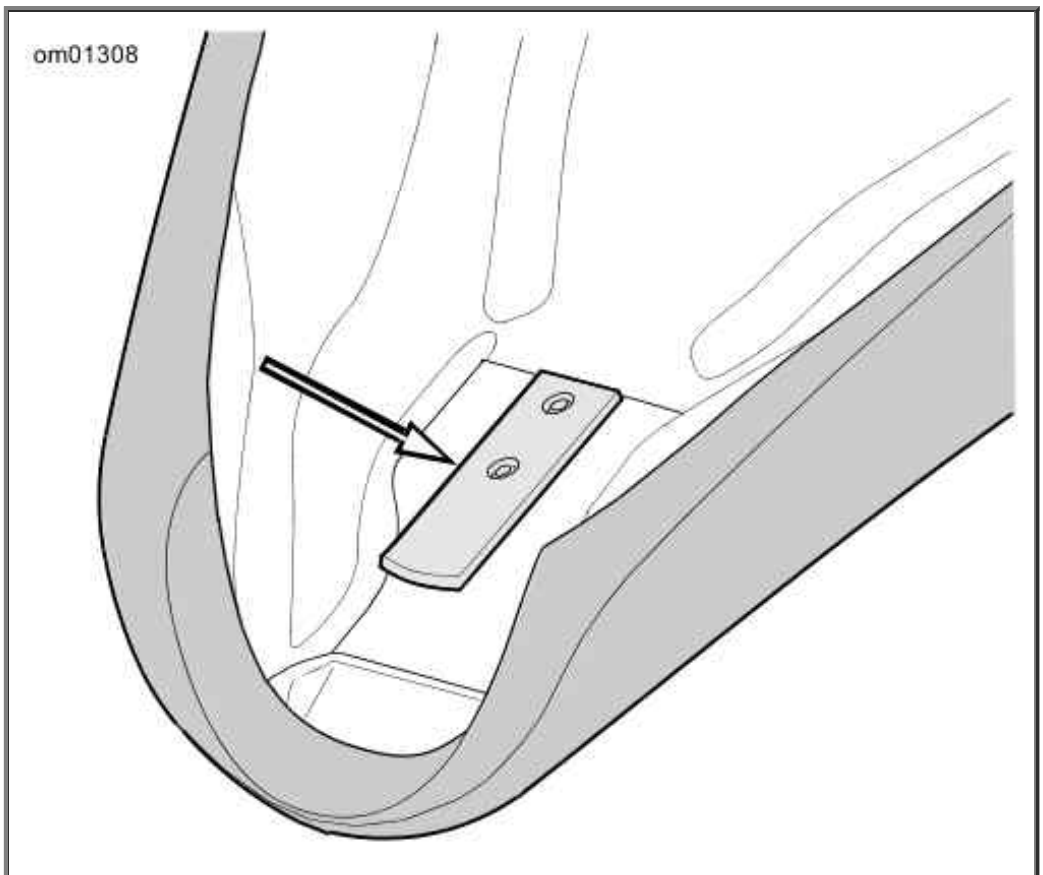

Seat Tongue (typical)

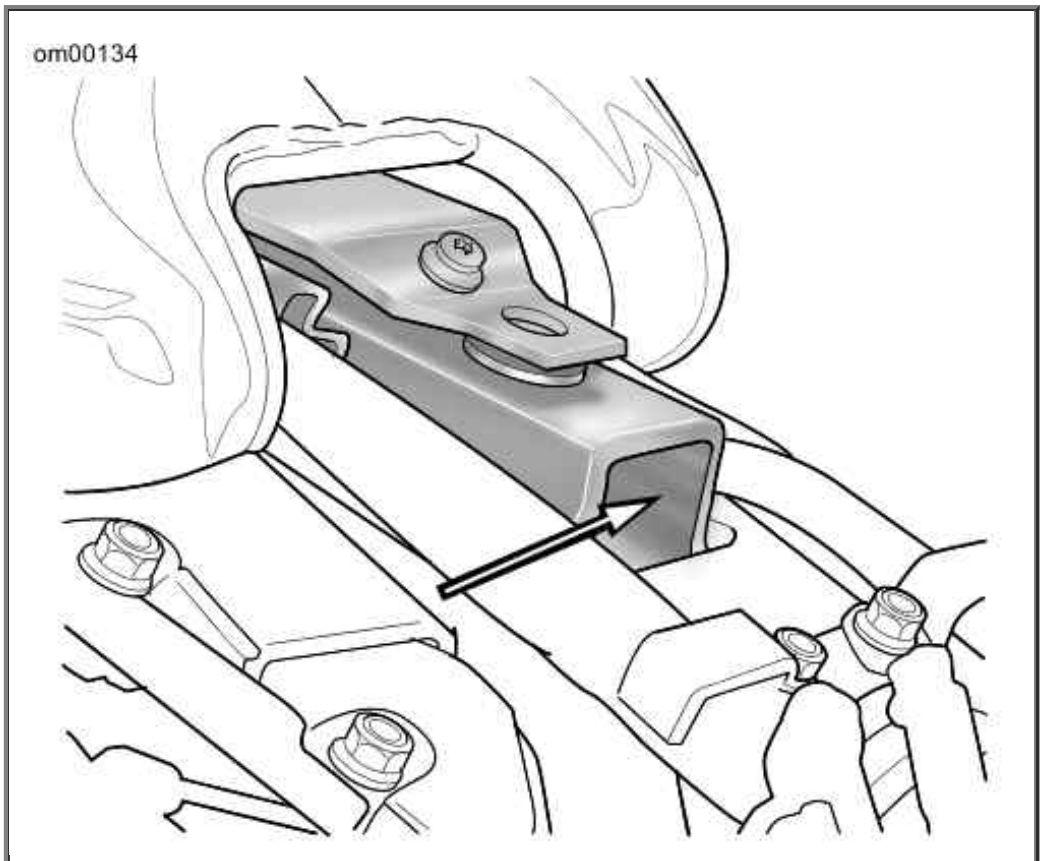

Frame Back

Seats: FLSTN, FLSTC, FLSTF and FLSTFB

Removal

⚠WARNING

After installing seat, pull upward on seat to be sure it is locked in position. While riding, a loose seat can shift causing loss of control, which could result in death or serious injury. (00070b)

1. See Seat: FLSTN/C/F/FB Models and Seat Mounting Stud. Remove the thumbscrew (1) and the mounting nuts (4).
2. Remove the passenger pillion (2, 7).
3. Slide the seat (5, 6 and 8) back to slide the seat mounting tongue out of the frame channel. Remove the seat.

Installation

1. See Seat: FLSTN/C/F/FB Models. Insert tongue at front of seat into the channel in the frame.
2. Install seat mounting nuts through holes in grab strap (3) and thread into mounting holes.
3. Slide slots on passenger seat (2, 7) on to seat mounting nuts.

4. Install thumbscrew (1) and tighten.

5. Tighten seat mounting nuts (4).

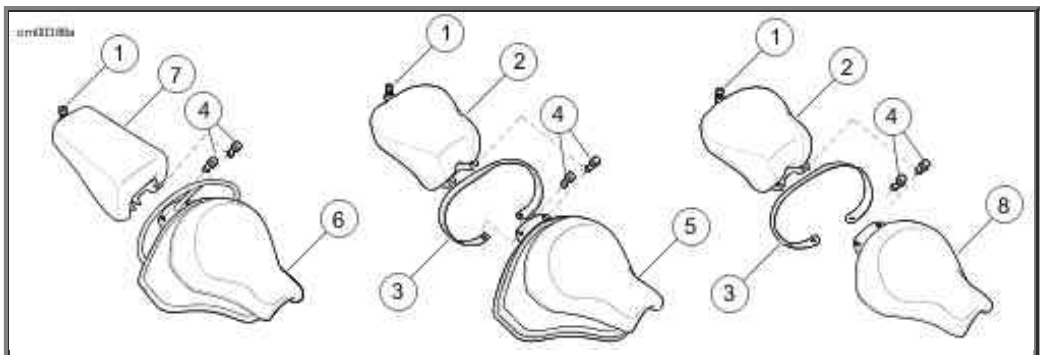

1. Thumbscrew
2. Pillion (FLSTC/FLSTF)
3. Grab strap (FLSTC/FLSTF)
4. Seat mounting nut (2)
5. Seat (FLSTC/FLSTF)
6. Seat (FLSTN)
7. Pillion (FLSTN)
8. Seat (FLSTFB)

Seat: FLSTN/C/F/FB Models

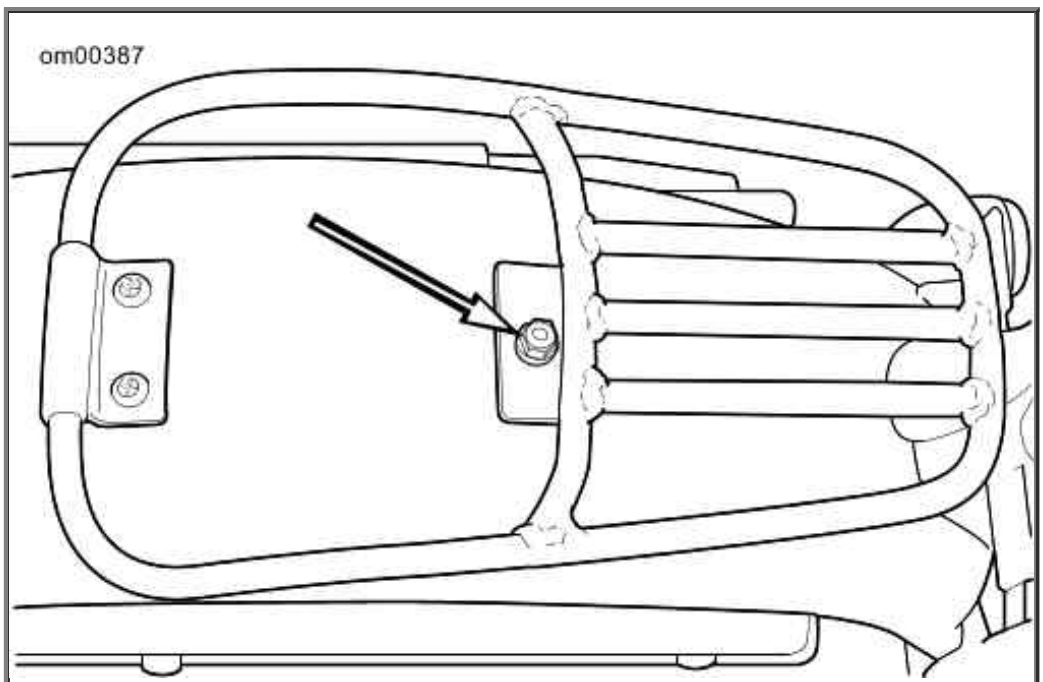

Seat Mounting Stud

Seats: FXS/FXST

Removal

1. See Seat: FXS/FXST. Remove seat mounting screw from top of rear fender.

2. See Seat Tongue (typical). Push seat rearward to free tongue at front of seat from slot or bracket in frame back.

3. Gently slide seat out of grab strap.

4. Remove seat from frame.

Installation

1. Slide seat into grab strap.
2. Place seat on frame back.
3. Slide seat toward front of motorcycle until the tongue locks into the bracket or slot in the frame back.
4. Push seat forward until rear fender seat retention nut is centered in hole of mounting bracket.
5. Hand-tighten the seat mounting screw.

⚠WARNING

After installing seat, pull upward on seat to be sure it is locked in position. While riding, a loose seat can shift causing loss of control, which could result in death or serious injury. (00070b)

6. Pull up on seat to verify that it is properly secured.

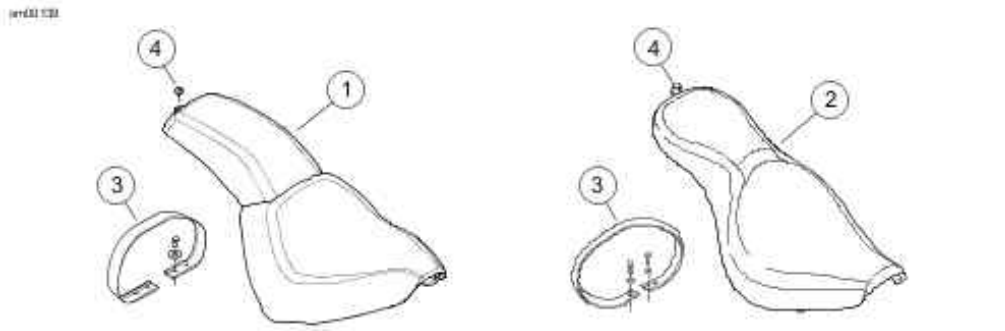

1. Seat (FXS)
2. Seat (FXST)
3. Grab strap
4. Seat mounting screw

Seat: FXS/FXST

Seat: FLSTSB

NOTE:

Raise rear of seat only slightly during removal or installation. Pivoting rear of seat up too high can cause the nose of the seat to damage the leather trim panel on the fuel tank.

Removal

1. See Seat: FLSTSB Models. Remove screw (1) from the seat hinge at the front of the seat.

2. Raise the rear of the seat to disengage the springs (2) from the seat spring mounting pins (3). Remove seat.

Installation

1. See Seat: FLSTSB Models. Align seat hinge with the mounting bracket on the frame.
2. From the right side of the motorcycle, insert the screw (1) into the seat hinge and tighten to 14-16 ft-lbs (19.0-21.7 Nm).
3. Align bushings on seat springs (2) with the mounting pins (3). Push rear of seat down to engage the seat spring mounting pins.

Adjusting Seat Position

Seat position may be adjusted forward or rearward for rider comfort.

1. Remove the seat.
2. See Seat Adjustment: FLSTSB Models. Remove the nut on the seat hinge.
3. Remove the bolts from the seat spring support bracket.

   NOTE:

   See Seat Configurations: FLSTSB Models. The seat hinge and seat spring support bracket must be installed in the same position (forward or rearward configuration) for the seat to fit properly on the motorcycle.

4. To position seat forward:
   a. See Seat Configurations: FLSTSB Models. Install hinge with the front tab in the slot.
   b. Install seat spring support bracket with springs toward the rear of the seat.
5. To position seat rearward:
   a. See Seat Configurations: FLSTSB Models. Install hinge with the rear tab in the slot.
   b. Install seat spring support bracket with springs toward the front of the seat.
6. Install nut on seat hinge and tighten to 20-25 ft-lbs (27.1-33.9 Nm).
7. Install screws for seat spring support bracket and tighten to 15-20 ft-lbs (20.3-27.1 Nm).
8. Install seat.

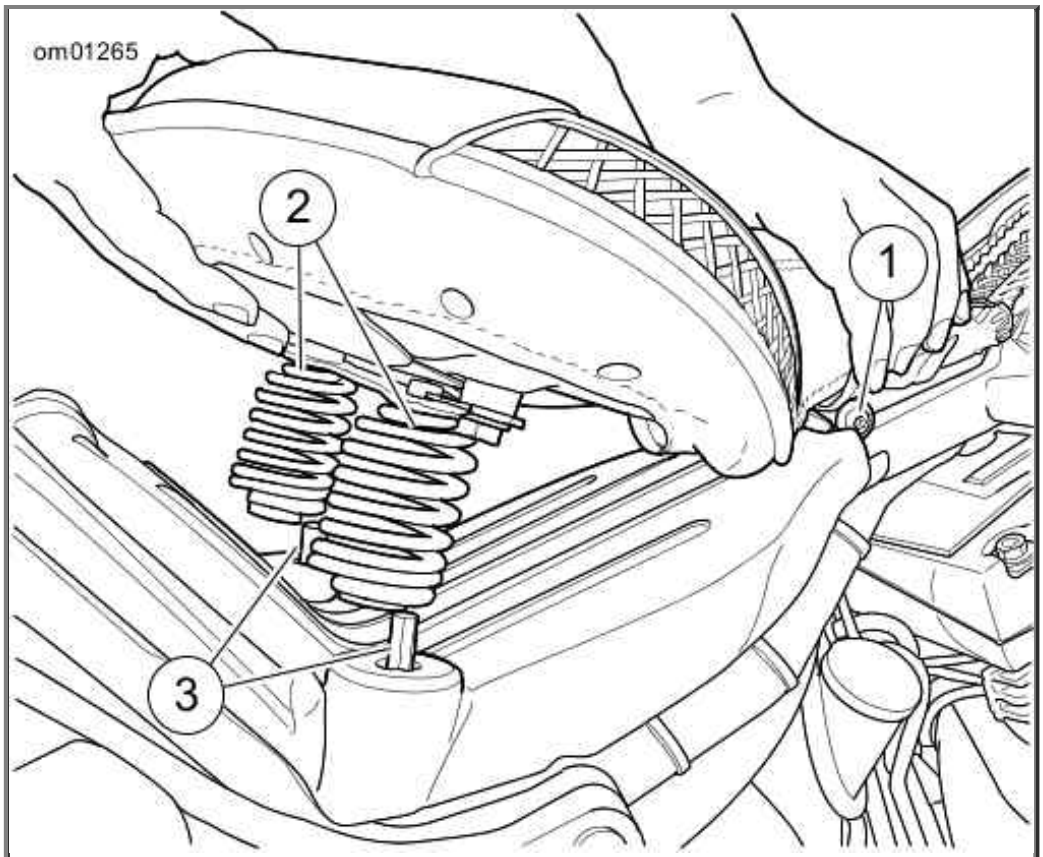

1. Screw
2. Seat springs
3. Seat spring mounting pins

Seat: FLSTSB Models

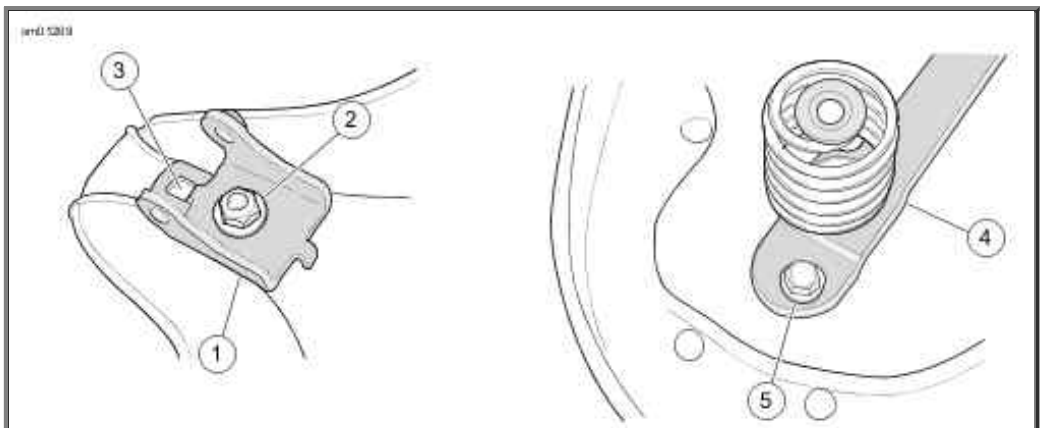

1. Seat hinge
2. Nut
3. Adjustment slot
4. Seat spring support bracket
5. Bolt (2)

Seat Adjustment: FLSTSB Models

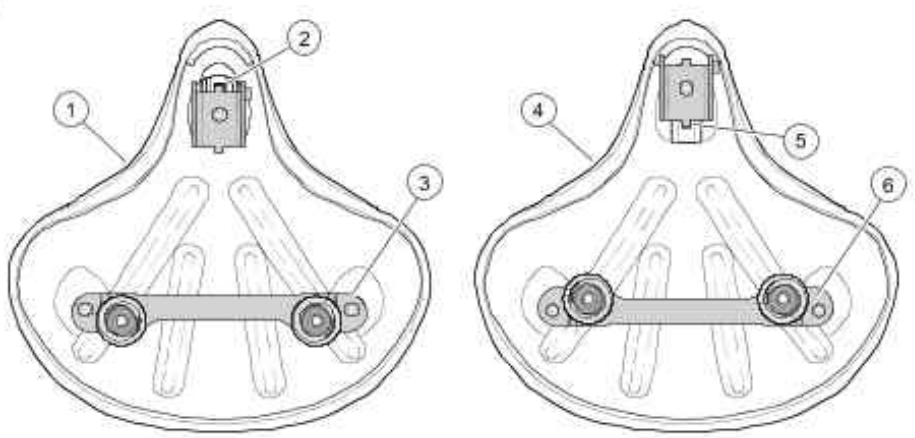

1. Forward seat configuration
2. Seat hinge, front tab in slot
3. Seat spring support bracket, springs toward the rear
4. Rearward seat configuration
5. Seat hinge, rear tab in slot
6. Seat spring support bracket, springs toward the front

Seat Configurations: FLSTSB Models

Seat: FXCWC

Rider Seat

The front of the rider seat is attached to the frame with a pivoting hinge. To open, pull back of rider seat up to release locating pins and pivot forward toward fuel tank. Nose of seat cushion may need to be pushed down to avoid catching on rear mount of console.

To close, rotate the rider seat back down into riding position ensuring that the locating pins properly engage their grommet seats.

Passenger Pillion Seat Deployment

A pillion seat, stored under the rider seat, can be deployed to accommodate a passenger.

NOTE:

The pillion seat supports up to 200 lbs 90 kg .

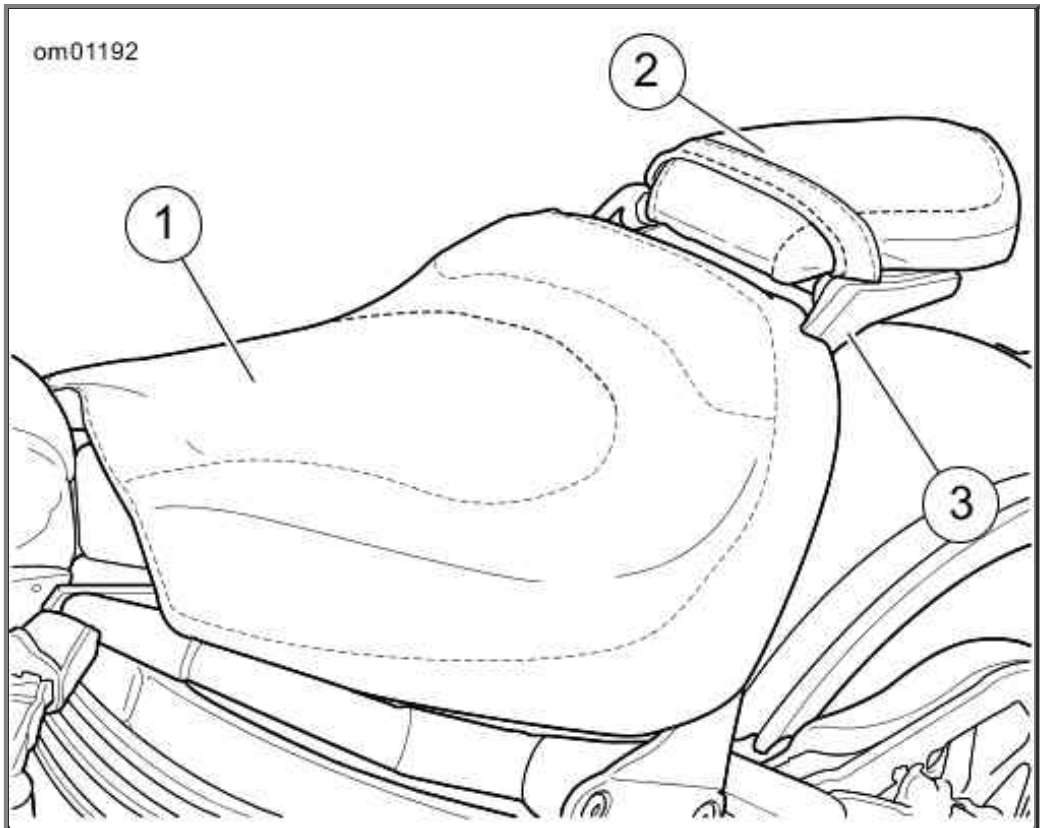

1. Rider seat
2. Passenger pillion
3. Pillion support

Seats: FXCWC

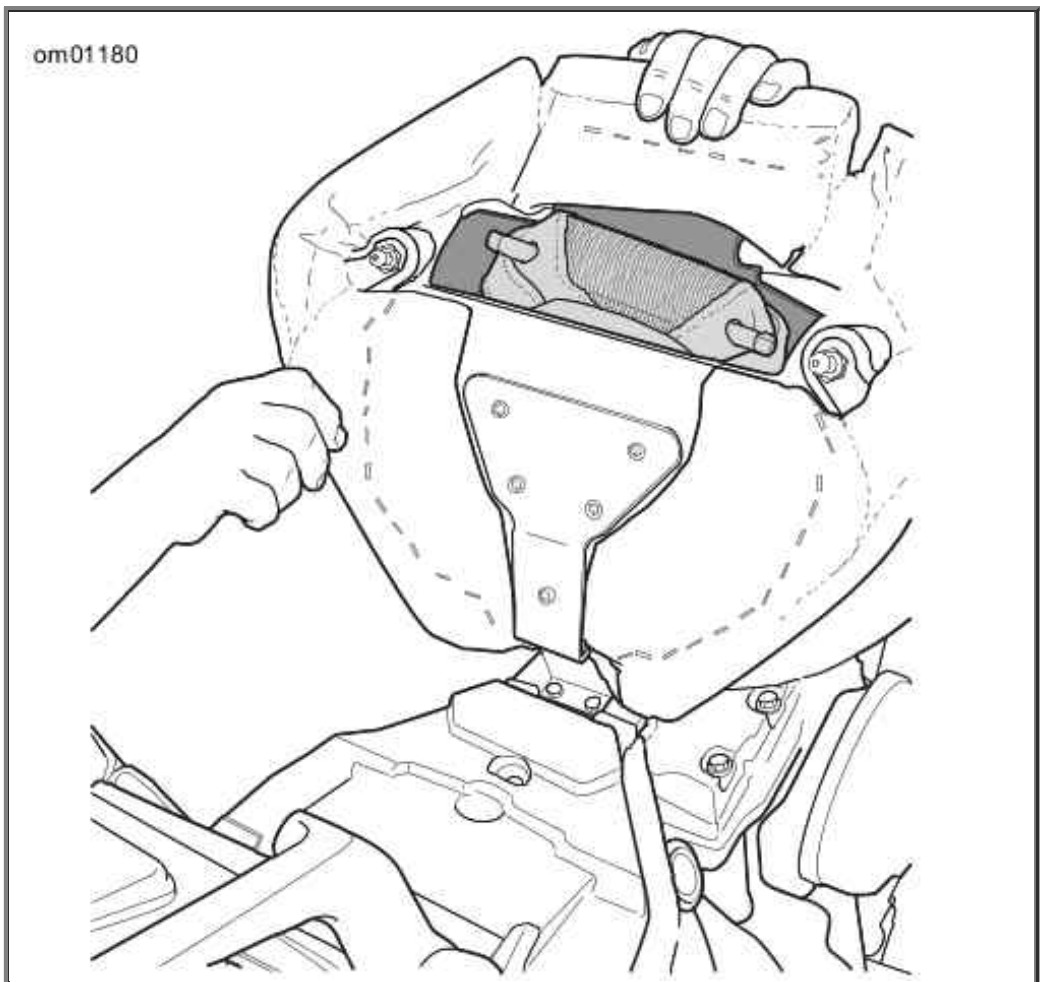

Opening Rider Seat: FXCWC Models

1. See Opening Rider Seat: FXCWC Models. Pull back of rider seat up to release locating pins and pivot forward toward fuel tank. Nose of seat cushion may need to be pushed down to avoid catching on rear mount of console.

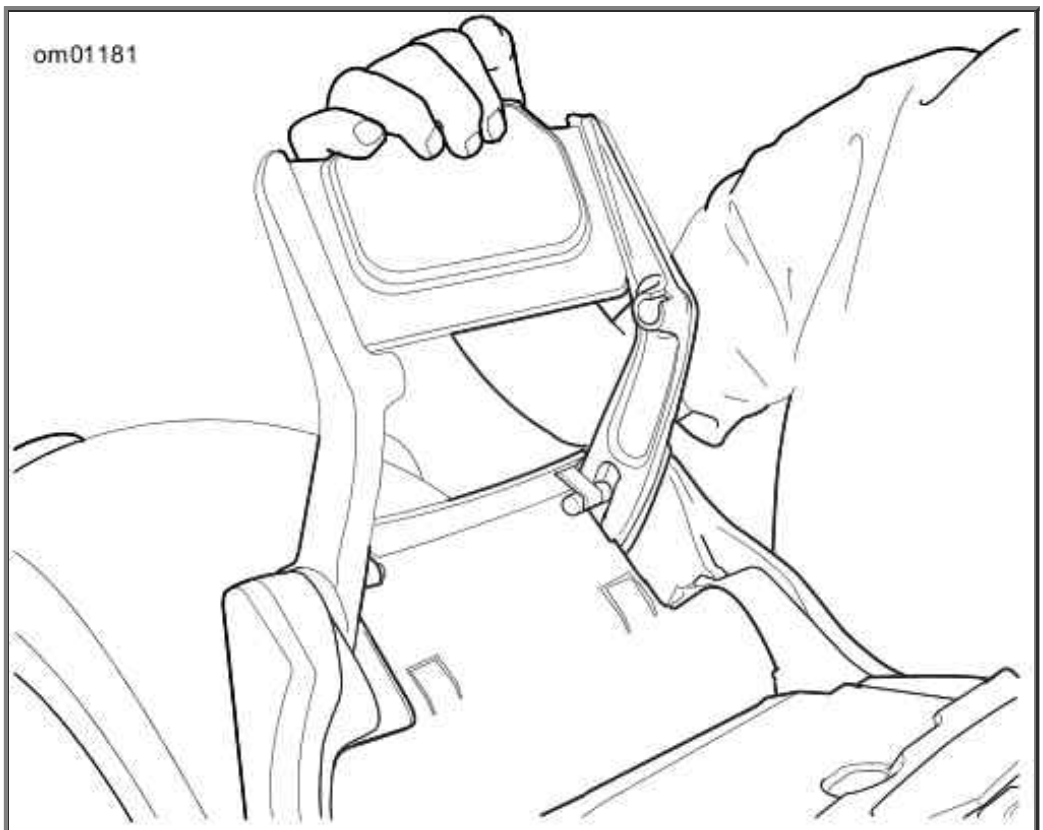

Positioning the Pillion Support: FXCWC Models

2. See Positioning the Pillion Support: FXCWC Models. Slide hinge pins of pillion support upward in side upright slots, then rotate pillion support approximately 180 degrees.

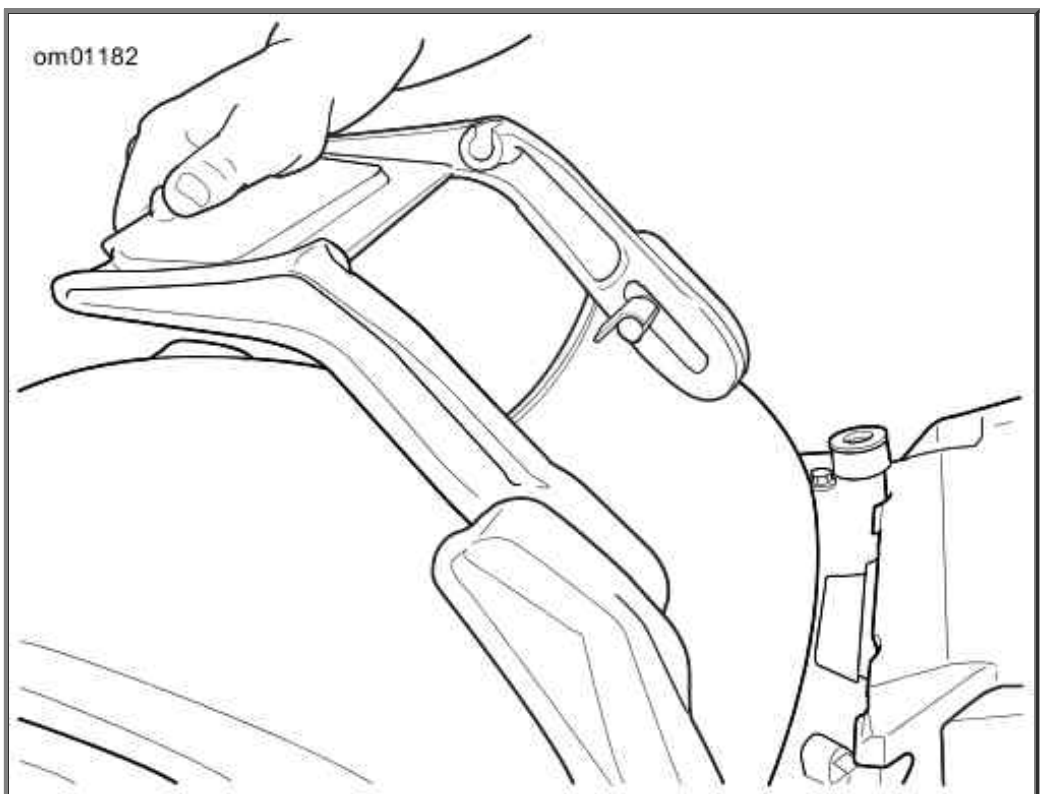

Pillion Support in Position: FXCWC Models

3. See Pillion Support in Position: FXCWC Models. Push pillion support back down the

slot so catch pin is fully engaged in bottom of side upright slots.

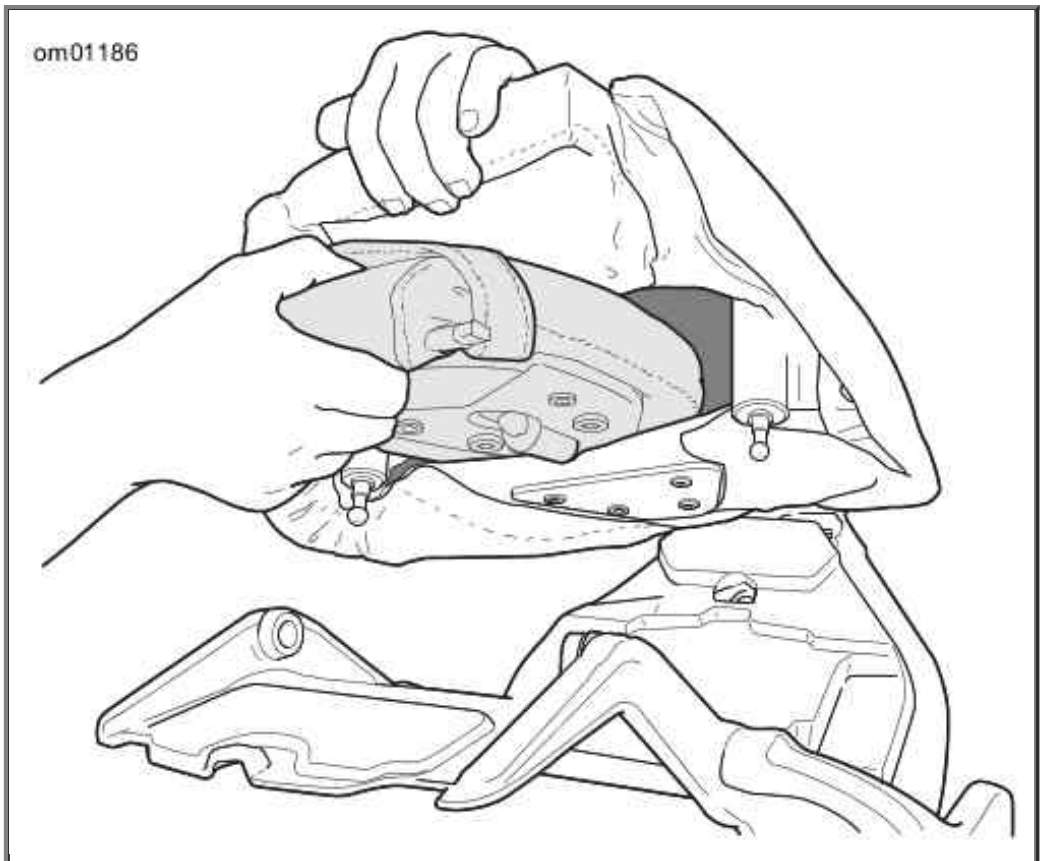

Removing Pillion From Rider Seat

4. See Removing Pillion From Rider Seat. Remove the pillion pad from the rider seat compartment.

5. Rotate the rider seat back down into riding position ensuring that the locating pins properly engage their grommet seats and the slots between the back cushions fit around the support uprights.

6. The pillion pad has two pins on the front; one is round (on the right side) and the other flat-keyed (on the left side). Insert the round, right-hand side into its pivot seat in the right side of the pillion support.

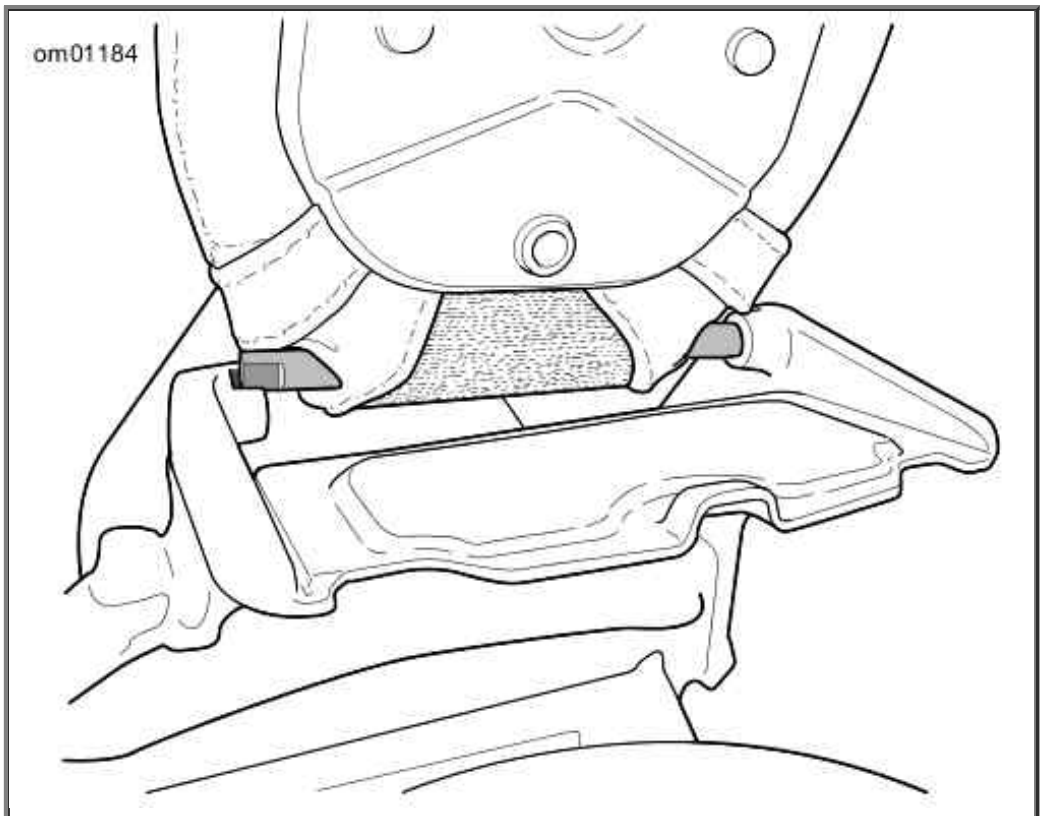

Inserting Pins Into Pillion Support: FXCWC Models

7. See Inserting Pins Into Pillion Support: FXCWC Models. When the pillion pad is approximately vertical, the left side flat key can then be put into its pivot seat on the pillion support.

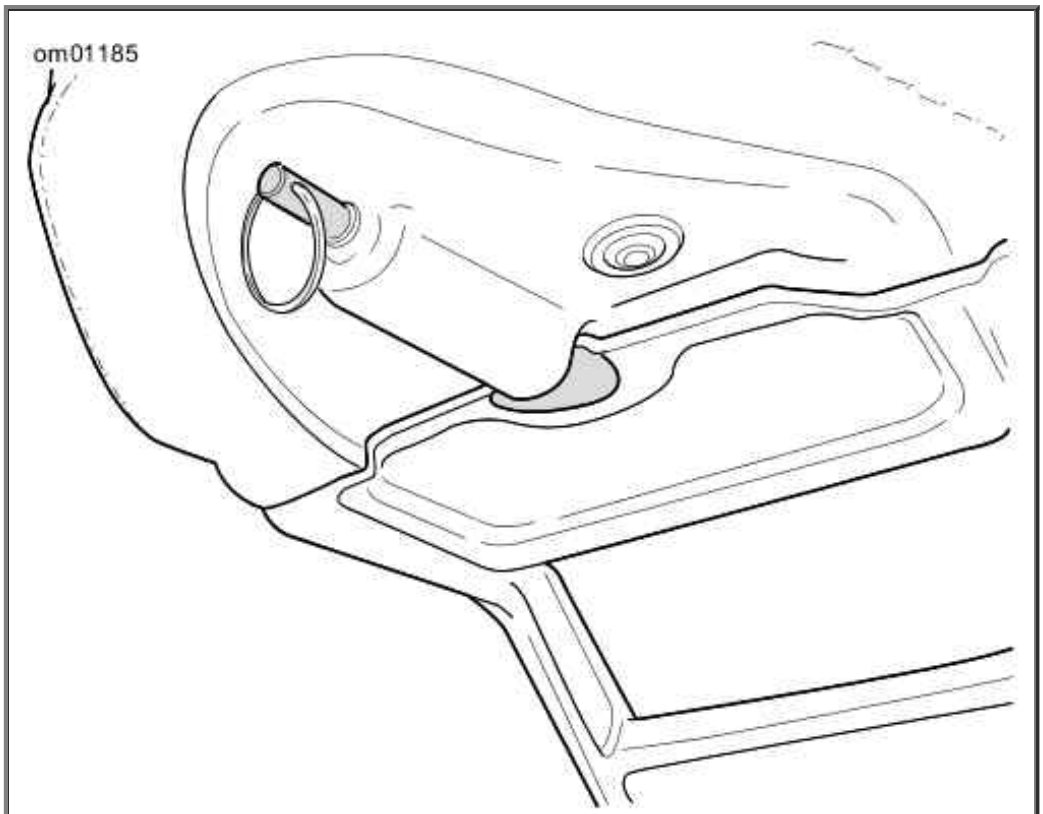

Pillion Latch Engaged: FXCWC Models

8. See Pillion Latch Engaged: FXCWC Models. Rotate the pillion pad to its horizontal position. Apply slight pressure on the end until the pillion pad latch catches on the back of the pillion support.

Stowing the Passenger Pillion

To stow the passenger pillion, unlatch the pillion pad by pulling on the latch ring under the rear of the pillion pad and reverse the pillion seat deployment instructions.

NOTE:

See Removing Pillion From Rider Seat. When stowing the pillion pad back in the rider seat compartment of the rider seat, the padding should be up and the pull tab goes in first. When properly stowed, the pillion pad's keyed pivot will be visible when looking at the opening of the rider seat compartment as shown in Opening Rider Seat: FXCWC Models.

Motorcycle Storage

Placing Motorcycle in Storage

CAUTION

Proper storage is important for the trouble-free operation of your motorcycle. See your Owner's Manual for storage recommendations or see a Harley-Davidson dealer. Improper storage procedures can lead to equipment damage. (00046a)

If the motorcycle will not be operated for several months, such as during the winter season, there are several tasks which should be performed. These steps will protect parts against corrosion, preserve the battery and prevent the build-up of gum and varnish in the fuel system.

⚠WARNING

Do not store motorcycle with gasoline in tank within the home or garage where open flames, pilot lights, sparks or electric motors are present. Gasoline is extremely flammable and highly explosive, which could result in death or serious injury. (00003a)

NOTE:

Make a list of everything you do and fasten it to a handgrip. When you take the motorcycle out of storage, this list will be your reference/checklist to get your motorcycle in operating condition.

1. Fill fuel tank and add a gasoline stabilizer. Use one of the commercially available gasoline stabilizers and follow the manufacturer's instructions.
2. Warm motorcycle to operating temperature. Change oil and turn engine over to circulate the new oil.
3. Check and adjust belt if necessary.
4. Check tire inflation. Adjust to proper inflation pressure.
5. To protect the vehicle's body panels, engine, chassis and wheels from corrosion, follow the

cosmetic care procedures described in the Care and Cleaning section of this owner's manual prior to storage.

6. Prepare battery for winter storage. See Battery: General.

⚠WARNING

Explosive hydrogen gas, which escapes during charging, could cause death or serious injury. Charge battery in a well-ventilated area. Keep open flames, electrical sparks and smoking materials away from battery at all times. KEEP BATTERIES AWAY FROM CHILDREN. (00065a)

NOTE:

- *If the motorcycle will be stored with the security system armed, connect a 750Ma SUPERSMART BATTERY TENDER 94654-98B to maintain battery charge.*
- *If the motorcycle will be stored with the security system disarmed, turn the motorcycle on while the hands-free fob is present. This will prevent the optional siren from sounding. Disconnect the negative battery cable and prepare battery for storage. See Battery: General.*

7. If motorcycle is to be covered, use a material such as light canvas that will breathe. Plastic materials that do not breathe promote the formation of condensation. Do not bend or tuck antennas under the cover. Either remove the antennas (if equipped) or allow them to protrude through the cover.

Removing Motorcycle From Storage

⚠WARNING

The clutch failing to disengage can cause loss of control, which could result in death or serious injury. Prior to starting after extended periods of storage, place transmission in gear and push vehicle back and forth several times to assure proper clutch disengagement. (00075a)

1. See Battery: General for proper battery care. Charge and install the battery.
2. Remove and inspect the spark plugs. Replace if necessary.
3. Clean the air cleaner element.
4. Start the engine and run until it reaches normal operating temperature. Turn off engine.
5. Check amount of oil in the oil tank.
6. Check the transmission lubricant level.
7. Check controls to be sure they are operating properly. Operate the front and rear brakes, throttle, clutch and shifter.
8. Check steering for smoothness by turning the handlebars through the full operating range.

⚠WARNING

Be sure tires are properly inflated, balanced and have adequate tread. Inspect your tires regularly and see a Harley-Davidson dealer for replacements. Riding with excessively worn, unbalanced or under-inflated tires can adversely affect stability and handling, which could result in death or serious injury. (00014a)

9. Check tire pressure. Incorrect pressure will result in poor riding characteristics and can affect handling and stability.
10. Check all electrical equipment and switches including the stop lamp, turn signals and horn for proper operation.
11. Check for any fuel, oil or brake fluid leaks.

CAUTION

Turn engine over a few times to be sure there is no oil in the crankcase and that all oil has been pumped back into the oil tank. Stop engine and re-check oil level. Failure to do so can result in engine damage. (00071a)

Care and Cleaning

Cleaning and General Care

Clean and protect the cosmetic surfaces on your motorcycle as often as possible to inhibit rust and corrosion. After the motorcycle is cleaned, polish and seal the motorcycle to create a sacrificial barrier of protection against the weather and harsh substances.

Refer to Recommended Cleaning and Care Products and Recommended Surface Care Products. Harley-Davidson cleaning products are tested extensively for use on vehicle surfaces and are formulated to be compatible with one another. See a Harley-Davidson dealer to purchase recommended cleaning products.

NOTES:

- *Use recommended surface care products. Paper towels, terry cloths, cloth diapers or other materials with nylon fibers can create fine scratches to surfaces.*
- *Some painted finishes and other surfaces may be scratched if gravel, dirt or grime are scraped across the surface during washing. Use clean towels and avoid rubbing sediments across gloss finishes.*
- *For repair of scratched surfaces, see a Harley-Davidson dealer.*

⚠WARNING

Observe warnings on labels of cleaning compounds. Failure to follow warnings could result in death or serious injury. (00076a)

⚠WARNING

Do not wash brake discs with cleaners containing chlorine or silicone. Cleaners containing chlorine and silicone can impair brake function, which could result in death or serious injury. (00077a)

CAUTION

Do not use a pressure washer to clean motorcycle. Using a pressure washer can result in equipment damage. (00489c)

CAUTION

Use of abrasive products or powered buffing equipment will cause permanent cosmetic damage to body panels. Use only recommended products and techniques outlined in this manual to avoid damaging body panels. (00245b)

Recommended Cleaning and Care Products

PRODUCT	PART NUMBER	PURPOSE	FRAME	BODY PANELS	WHEELS	DENIM FINISH	OTHER
H-D Sunwash Cleaner Concentrate	94659-98	General cleaning and washing of all surfaces. Prevents hard water spots and rinses clean in the sun.	Yes	Yes	Yes	Yes	
H-D Bug Remover	94657-98	Removes bugs from metal, plastic or painted surfaces. Also available as individual wipes (97400-10).	Yes	Yes	Yes	Yes	
Harley-Gloss	94627-98	Produces high gloss with UV protection. Allows chrome to breathe, unlike wax. Good for windshields. Also available	Yes	Yes	Yes	No	

		as individual wipes (97401-10).					
Harley Spray Cleaner and Polish	99817-99B	Aerosol quick cleaner and detailer. Degreases and reduces static attraction to dust.	Yes	Yes	Yes	No	
Wheel and Tire Cleaner	94658-98	Cleans wheels, tires, whitewalls and black-coated exhaust pipes and mufflers. Do not use on frames or anodized parts.	No	No	Yes	No	
Harley Bright Chrome Cleaner	94683-99	Shines chrome-plated surfaces and cleans brushed aluminum or stainless steel surfaces.	As applicable				
Harley Bright Metal Polish	99725-89	Polishes non-clear coated polished aluminum or polished stainless steel surfaces.	As applicable				
Harley Glaze Polish & Sealant	99701-84	Polishes windshields, painted surfaces and chrome.	Yes	Yes	As applicable	No	
H-D Swirl & Scratch Treatment	94655-98	Removes fine scratches and swirls.	Yes	Yes	No	No	
Harley Denim Paint Cleaner	94866-10	Waterless quick cleaner and detailer.	Yes	Yes	Yes	Yes	
Windshield Cleaner Individual Wipes	97406-10	Quick windshield cleaner for road trips.	Yes	Yes	No	No	Windshield
H-D Black Tire Sidewall Protectant	94628-05	Restores luster to black tire sidewalls.	No	No	No	No	Tires

H-D Preserve Bare Aluminum Protectant	99845-07	Corrosion control for bare aluminum surfaces. Also available as individual wipes (99846-10).	As applicable				
H-D Windshield Water Repellent Treatment	99841-01	Allows water to bead and dissipate from the windshield.	No	No	No	No	Windshield
H-D Leather Dressing	98261-91V	Weatherproofs and preserves leather products.	No	No	No	No	Leather goods
Harley Rejuvenator for Black Leather	98839-09	Rejuvenates black leather products.	No	No	No	No	Black leather goods
S100 Total Cycle Cleaner	99760-85T	Cleans painted surfaces, chrome and aluminum. Rinse completely while surfaces are wet. Do not allow to dry.	Yes	Yes	Yes	No	
NOVUS 1 Cleaner/Protectant	99837-94T	Cleans windshields, tail lamps and all plastics. Resists fingerprints, fogging, smears and repels dust.	No	No	No	No	Windshield
NOVUS 2 Scratch Remover	99836-94T	Minor scratch remover for windshields and plastics. Apply after NOVUS 1.	No	No	No	No	Windshield

Recommended Surface Care Products

PRODUCT	PART NO.	DESCRIPTION
Wash Mitt	94760-99	Absorbant wool-blended washing mitten.

Soft Detailing Pad	94790-01	Soft pad for removing bugs and debris without scratching the surface finish.
Softstrips	94680-99	For cylindrical surfaces such as handlebars, forks, pushrod covers and spokes.
Softcloth	94656-98	Non-absorbant cloth for applying and buffing Swirl & Scratch treatment and Harley Glaze to painted surfaces or chrome.
Soft Drying Towel	94791-01	Extra-absorbant, non-streaking synthetic towel for drying. Dampen towel and wring out before using for greatest absorbancy.
Wheel & Spoke Brush	43078-99	Cone-shaped scrub brush for wheels.
Microfiber Detailing cloth	94663-02	Highly absorbant detailing cloth for polishing and sealing. Contains no nylon fibers.
S100 Detailing Swabs	99780-04	Large cotton swabs for cleaning crevices and detailed surfaces.
Cleaning Brush Kit	94844-10	Brush kit for detailing your motorcycle.
H-D Bike Wash Bucket and Apron	94811-10	Wash bucket with apron to hold your supplies. Includes grit guard.

Denim Finish Care

Some motorcycles have a Denim (flat or matte) finish. The Denim finish has qualities which differ from high gloss finishes on all other Harley-Davidson motorcycles. Like denim fabric, Denim paint will burnish or mar with age and use, thus adding character and personality to the finish of the motorcycle. Refer to Recommended Cleaning and Care Products for recommended products.

- If scratched, the color coat of paint does nick/scuff and these marks cannot be rubbed out.
- If polished, the finish will become less matte and more glossy over time.

How to Clean

For light deposits: Use Harley-Davidson Denim Paint Cleaner and a Softcloth. This helps remove finger prints and light soil.

For heavier deposits: Use H-D Sunwash and a clean Wash Mitt. Rinse thoroughly with clean water.

Magnesium Part Care

Rear turn signal and license plate assemblies on Rocker models are made from magnesium. Automotive wax may be used on these parts to protect against corrosion.

Satin Stainless Paint Care

Some parts on certain Rocker models have a satin stainless paint finish. Clean and care for these parts using the cleaning instructions under Denim Finish Care. Refer to Denim Finish Care.

Leather Care

NOTES:

Many Harley-Davidson accessories and seats are made of either treated or untreated leather or have leather inserts. Natural materials age differently and require different care than man-made materials. Seat covers and panels made of leather will gain "character", such as wrinkles, with age. Leather is porous and organic and each leather product will settle into its own distinct form with use. Your leather product will mature into its own custom shape and style from the sun, rain and time. This maturing is natural and will enhance the custom quality of your Harley-Davidson motorcycle.

Leather surfaces are not designed for long-term exposure to inclement weather and should be protected with a Harley-Davidson Seat Rain Cover or Motorcycle Storage Cover (sold separately). See your Harley-Davidson dealer.

Leather must be periodically cleaned and treated to maintain its appearance and extend its life. Clean and treat leather once a season or more frequently under adverse conditions.

CAUTION

Do not use bleach or detergents containing bleach on saddlebags, seats, tank panels or painted surfaces. Doing so can result in equipment damage. (00229a)

- Do not use ordinary soap to clean leather or fur. It could dry or remove the oils from the leather.
- Use ONLY a good quality saddle soap to clean leather. Be sure you rinse saddle soap off thoroughly before treating leather.
- Never try to dry leather quickly, using artificial means. Always let leather dry naturally, at room temperature. Always allow leather to dry completely before using.

1. Vacuum or blow dust off.
2. Thoroughly clean leather with a good quality saddle soap, following manufacturer's directions. Rinse thoroughly with clean sponge or cloth and water. Allow leather to dry.
3. Once leather is dry, rejuvenate faded black leather surfaces with Harley Rejuvenation for Black Leather.
4. Treat with a good quality leather treatment, such as H-D Leather Dressing.

Windshield Care

CAUTION

Polycarbonate windscreens/windshields require proper attention and care to maintain. Failure to maintain polycarbonate properly can result in damage to the windscreen/windshield. (00483d)

CAUTION

Use only Harley-Davidson recommended products on Harley-Davidson windshields. Do not use harsh chemicals or rain sheeting products, which can cause windshield surface damage, such as dulling or hazing. (00231c)

- Powdered, abrasive or alkaline cleanser will damage the windscreen/windshield. Ammonia-based window cleaners cause permanent yellow effects to windshields.
- Do not use gas station windshield cleaner as it may damage the finish.
- Do not clean in hot sun or high temperature.

Windshields require special care. Harley-Davidson recommends using Harley Softcloths to clean your windshield. Refer to Recommended Cleaning and Care Products for recommended cleaning products.

NOTES:

- *Use NOVUS 2 SCRATCH REMOVER to remove minor scratches.*
- *To treat the windshield with water repellent use WINDSHIELD WATER REPELLENT TREATMENT.*
- *Covering the windshield with a clean, wet cloth for approximately 15-20 minutes before washing will make dried bug removal easier.*

1. Use mild soap and warm water to wash the windshield.

2. Wipe dry with a clean Soft Drying Towel.

NOTE:

To minimize swirl marks, cleaning should be done when motorcycle is cool and parked in the shade. Faint swirl marks are normal and may be more visible on tinted windshields.

Wheel Care

Regular washing and the use of a corrosion protectant will help the wheels maintain their original appearance. Damage from harsh chemicals, acid based wheel cleaners, brake dust and lack of maintenance can occur. Refer to Recommended Cleaning and Care Products for recommended cleaning products.

NOTES:

- *Treat new wheels with Harley Preserve to protect against corrosion. Reapply frequently to clean wheels.*
- *It is imperative that the wheels are cared for weekly to guard against pitting and corrosion.*
- *Corrosion of these components is not considered to be a defect in materials or workmanship.*
- *Aluminum wheels do not have a protective coating.*

Washing the Motorcycle

Refer to Recommended Cleaning and Care Products and Recommended Surface Care Products for recommended cleaning and care products.

NOTES:

- *During rinsing and washing, avoid direct spray on radio, saddlebags, trunk or Tour-Pak sealing areas (if equipped). Avoid spraying water under leather saddlebag covers (if equipped).*

Preparation

1. Allow motorcycle to cool before rinsing or washing. Spraying water on hot surfaces can leave water spots and mineral deposits.
2. Rinse the motorcycle from the bottom up.
3. To loosen dried bugs or hardened dirt, allow surfaces to soak under a damp towel.

Cleaning the Wheels and Tires

1. Rinse wheel and tire surfaces. Avoid splashing brake dust on chrome or painted parts.
2. Apply Wheel and Tire Cleaner. Allow cleaner to sit for 1 minute.
3. Clean wheel with Soft Detailing Pad or Wheel & Spoke Brush. Use Softstrips to clean wheel spokes.
4. Rinse well.

Washing the Motorcycle

NOTE:

Refer to the appropriate instructions in this section for cleaning leather, Denim (flat) finishes, windshields or other special surfaces.

1. Fill a bucket with clean water.
2. Fill an H-D wash bucket with water and add H-D Sunwash Cleaner Concentrate, following the directions on the package.
3. Soak the H-D Wash Mitt in the Sunwash solution. Wash all surfaces from the top working down.
4. Spray H-D Bug Remover to remove any bugs.
5. Rinse from the bottom up, then rinse from the top down.

Drying the Motorcycle

1. Dry the surfaces of the motorcycle from the top down using a Soft Drying Towel or HOG Blaster.
2. Dampen towel in clean water and wring out the excess. The towel is more absorbent when wet.
3. Wipe across the vehicle surface.
4. Repeat as necessary until surface is completely dry.

Polishing and Sealing

NOTE:

If motorcycle has Denim finish, skip the Polishing and Sealing procedure.

1. Apply Harley Glaze Polish & Sealant with a Softcloth or Microfiber Detailing Cloth, following the instructions on the package.
2. Buff with a Softcloth.

Finishing Tires

Apply Harley Black to tires, following the instructions on the package.

Troubleshooting

Troubleshooting: General

⚠WARNING

The troubleshooting section of the Owner's Manual is a guide to diagnose problems. Read the service manual before performing any work. Improper repair and/or maintenance could result in death or serious injury. (00080a)

The following checklist of possible operating troubles and their probable causes will be helpful in keeping your motorcycle in good operating condition. More than one of these conditions may be causing trouble and should be carefully checked.

Engine

Starter Does Not Operate or Does Not Turn Engine Over

1. Engine run switch in OFF position.
2. Ignition switch not ON.
3. Discharged battery or loose or corroded connections (solenoid chatters).
4. Clutch lever not squeezed against handlebar or transmission not in neutral.
5. Jiffy stand not in retracted position (required for international models only).

Engine Turns Over But Does Not Start

1. Fuel tank empty.
2. Discharged battery, loose or damaged battery terminal connections.

3. Fouled spark plugs.
4. Spark plug cable connections loose or in bad condition and shorting.
5. Loose or corroded wire or cable connection(s) at coil or battery.
6. Fuel pump inoperative.
7. Blown fuse.

Starts Hard

1. Spark plugs in bad condition, have improper gap, or are partially fouled.
2. Spark plug cables in bad condition and leaking.
3. Battery nearly discharged.
4. Loose wire or cable connection(s) at one of the battery terminals or at coil.
5. Engine oil too heavy (winter operation).
6. Fuel tank vent plugged or fuel line closed off, restricting fuel flow.
7. Water or dirt in fuel system.
8. Fuel pump inoperative.

Starts But Runs Irregularly or Misses

1. Spark plugs in bad condition or partially fouled.
2. Spark plug cables in bad condition and leaking.
3. Spark plug gap too close or too wide.
4. Battery nearly discharged.
5. Damaged wire or loose connection at battery terminals or coils.
6. Intermittent short circuit due to damaged wire insulation.
7. Water or dirt in fuel system.
8. Fuel vent system plugged. See dealer.
9. One or more injectors fouled.

Frequent Spark Plug Fouling

1. Fuel mixture too rich.
2. Incorrect spark plug.

Pre-ignition or Detonation (Knocks or Pings)

1. Incorrect fuel.
2. Incorrect spark plug for the kind of service.

Overheats

1. Insufficient oil supply or oil not circulating.
2. Heavy carbon deposit from lugging engine. See dealer.
3. Insufficient air flow over cylinder heads during extended periods of idling or parade duty.

Excessive Vibration

1. Rear fork pivot shaft nuts loose. See dealer.
2. Front engine mounting bolts loose. See dealer.
3. Engine to transmission mounting bolts loose. See dealer.
4. Damaged frame. See dealer.
5. Front chain or links tight as a result of insufficient lubrication or belt badly worn.
6. Wheels and/or tires damaged. See dealer.
7. Vehicle not properly aligned. See dealer.

Electrical System

Alternator Does Not Charge

1. Regulator not grounded. See dealer.
2. Engine ground wire loose or damaged. See dealer.
3. Loose or damaged wires in charging circuit. See dealer.

Alternator Charge Rate is Below Normal

1. Weak battery.
2. Excessive use of add-on accessories.
3. Loose or corroded connections.
4. Extensive periods of idling or low speed riding.

Transmission

Transmission Shifts Hard

1. Bent shifter rod. See dealer.

Transmission Jumps Out of Gear

1. Worn shifter dogs in transmission. See dealer.

Clutch Slips

1. Clutch controls improperly adjusted. See dealer.
2. Worn friction discs. See dealer.
3. Insufficient clutch spring tension. See dealer.

Clutch Drags or Does Not Release

1. Clutch controls improperly adjusted. See dealer.
2. Primary chaincase overfilled.
3. Clutch discs warped. See dealer.

Clutch Chatters

1. Friction discs or steel discs worn or warped. See dealer.

Brakes

Brakes Do Not Hold Normally

1. Master cylinder low on fluid. See dealer.
2. Brake line contains air bubbles. See dealer.
3. Master cylinder piston worn. See dealer.
4. Brake pads contaminated with grease or oil. See dealer.
5. Brake pads badly worn. See dealer.
6. Brake disc badly worn or warped. See dealer.
7. Brake fades because of heat build up. Excessive braking or brake pads dragging. See

dealer.

8. Brake drags. Insufficient hand lever freeplay. See dealer.

Accessories

Genuine Motor Parts and Accessories

Stop at your Harley-Davidson dealer to pick up a copy of the Genuine Motor Parts and Accessories catalog or go to www.harley-davidson.com to view thousands of Genuine Motor Accessories that are available for Harley-Davidson motorcycles.

The website includes the following tools and resources for accessorizing and personalizing your motorcycle.

Online Catalog

The full Genuine Motor Parts and Accessories catalog is available online in PDF format. The catalog includes hundreds of pages of Harley-Davidson accessories and maintenance products. For performance parts, check out the Screamin' Eagle Pro Racing Parts catalog.

Shop For Your Bike

Browse through categories of accessories and options available specifically for your motorcycle. View product descriptions, pricing, fitment and online instruction sheets for many of the available products.

Customizer

Virtually redesign your motorcycle with parts and accessories using the Customizer. This tool allows you to experiment with different accessory and color combinations and shows how your motorcycle would look with the accessories installed. You can easily create a custom list of accessories to print out for your dealer.

Fit Shop

Learn how to customize your motorcycle to fit you personally. See how making changes to the suspension, seat, handlebars or foot controls can enhance the ergonomics and comfort of your motorcycle.

Custom Seats

Create a custom seat using selected designs, colors and textured materials. Custom seat specifications can be easily printed out for your dealer.

Custom Coverage

Add Accessories To Your New Ride

Harley-Davidson is offering a limited opportunity to purchase new accessories and have them installed at an authorized Harley-Davidson dealership **and** receive the Custom Coverage extended Limited Warranty rather than the standard 90 day Parts and Accessories post purchase over-the-counter warranty.

- Limited warranty for eligible *street legal* Genuine Motor Parts and Genuine Motor Accessories to run concurrent with the remainder of the motorcycle's 24-month manufacturer's warranty.
- Visit an authorized Harley-Davidson dealership within 60 days to qualify for Custom Coverage.
- Parts and accessories must be purchased and installed at an authorized Harley-Davidson dealership to qualify for Custom Coverage.
- Visit any authorized Harley-Davidson dealership as often as you like during the 60 days after purchase to select, purchase and install accessories.

Ride, personalize, customize. Take advantage of this Custom Coverage extended Limited Warranty offer today to make your bike your Custom ride.

NOTE:

Customers have 60 days after the motorcycle purchase date to participate in Custom Coverage extended Limited Warranty offer. Parts and Accessories must be purchased and installed at an authorized Harley-Davidson dealership. Parts and Accessories purchased via the internet are not eligible. To locate the authorized Harley-Davidson dealership nearest you, visit the Dealer Locator on www.harley-davidson.com.

Warranties and Responsibilities

Warranty and Maintenance

This Owner's Manual contains your new motorcycle warranty and an owner's maintenance record.

It is the owner's responsibility to follow the scheduled mileage intervals as specified. All of the specified maintenance services must be performed to keep your warranty valid.

1. Make an appointment with a Harley-Davidson dealer for inspection and service prior to first 1000 mi 1600 km or 500 mi 800 km for Springer models.

2. Bring this Owner's Manual with you when you visit your dealer to have your motorcycle inspected and serviced.

3. Have the dealer technician sign the maintenance record in the Owner's Manual at the proper mileage interval. The records should be retained by the owner as proof of proper maintenance.

4. Keep receipts covering any parts, service or maintenance performed.

These records should be transferred to each subsequent owner.

⚠WARNING

Harley-Davidson parts and accessories are designed for

Harley-Davidson parts and accessories are designed for Harley-Davidson motorcycles. Using non-Harley-Davidson parts or accessories can adversely affect performance, stability or handling, which could result in death or serious injury. (00001b)

Use only Harley-Davidson approved parts and accessories. Use of other manufacturers performance parts may void your warranty. See a Harley-Davidson dealer.

Harley-Davidson dealerships are independently owned and operated and may sell parts and accessories that are not manufactured or approved by Harley-Davidson. Therefore, you should understand that we are not and cannot be responsible for the quality, suitability or safety of any non-Harley-Davidson part, accessory or design modification, including labor, which may be sold and/or installed by our dealers.

Keeping It All Harley-Davidson

Genuine Harley-Davidson parts are engineered and tested specifically for use on your motorcycle. Insist that your authorized Harley-Davidson dealer uses only Genuine Harley-Davidson replacement parts and accessories to keep your Harley-Davidson motorcycle and its limited warranty intact.

NOTE:

Installing off-road or competition parts to enhance performance may void all or part of your new motorcycle limited warranty. See the Harley-Davidson Motorcycle Limited Warranty in this manual or an authorized Harley-Davidson dealer for details.

CAUTION

It is possible to overload your vehicle's charging system by adding too many electrical accessories. If the combined electrical accessories operating at any one time consume more electrical current than the vehicle's charging system can produce, the electrical consumption can discharge the battery and cause damage to the vehicle's electrical system. See an authorized Harley-Davidson dealer for advice about the amount of current consumed by additional electrical accessories or for necessary wiring changes. (00211c)

EPA Noise Regulations in the United States

EPA noise regulations require that the following statements be included in the Owner's Manual.

EPA Regulations

TAMPERING WITH NOISE CONTROL SYSTEM PROHIBITED: Federal law prohibits the following acts or the causing thereof: (1) The removal or rendering inoperative by any person other than for purposes of maintenance, repair, or replacement of any device or element of design incorporated into any new vehicle for the purpose of noise control prior to its sale or delivery to the

ultimate purchaser or while it is in use, or (2) the use of the vehicle after such device or element of design has been removed or rendered inoperative by any person.

AMONG THOSE ACTS PRESUMED TO CONSTITUTE TAMPERING ARE THE FOLLOWING:

1. Replacing the muffler(s) and/or the entire exhaust system with parts not certified to be noise legal for street use.
2. Removing or modifying the muffler internal baffles in any way.
3. Replacing the air intake/cleaner assembly with one not certified to be noise legal for street use.
4. Modifying the air intake/cleaner assembly in such a way as to make the vehicle no longer noise legal for street use.

Harley-Davidson recommends that any and all noise related maintenance be done by an authorized Harley-Davidson dealer using genuine Harley-Davidson parts.

California and Select International Markets Evaporative Emission Controls: 2011 Models

All new 2011 Harley-Davidson motorcycles sold in the State of California and select international markets are equipped with an evaporative emission control system. This system is designed to meet CARB and local regulations in effect at the time of manufacture.

The system requires a small amount of maintenance. Periodic inspection is required to make sure hoses are properly routed, not kinked or blocked and that all fittings are secure. Mounting hardware should also be checked periodically for tightness.

Warranty/Service Information

Any authorized Harley-Davidson dealer is responsible for providing the warranty repair work on your motorcycle. The fact that a dealership performs warranty repairs does not create an agency relationship between Harley-Davidson Motor Company and the authorized dealership. If you have any questions regarding warranty obligations contact your authorized Harley-Davidson dealer.

For normal service work or warranty work under the above conditions, you may obtain the name and location of your nearest U.S. authorized Harley-Davidson dealer by calling 800-490-9635 (toll free), in any state except Alaska and Hawaii. To find dealers worldwide, see www.harley-davidson.com.

Reporting Safety Defects in United States

Safety defects must be reported to the National Highway Traffic Safety Administration (NHTSA) and Harley-Davidson.

NHTSA Statement

If you believe that your motorcycle has a defect which could cause a crash or could cause injury or death, you should immediately inform the National Highway Traffic Safety Administration (NHTSA) in addition to notifying Harley-Davidson.

If NHTSA receives similar complaints, it may open an investigation, and if it finds that a safety defect exists in a group of motorcycles, it may order a recall and remedy campaign. However, NHTSA cannot become involved in individual problems between you, your authorized Harley-Davidson dealer, or Harley-Davidson.

Refer to NHTSA Contacts to contact NHTSA.

NHTSA Contacts

ITEM	DATA
Phone	Call the Auto Safety Hot Line toll-free at 888-DASH-2DOT
Mail	U.S. Department of Transportation, National Highway Traffic Safety Administration, Office of Defects Investigation, NVS-210, 400 7th Street S.W., Washington, D.C. 20590
Web site	www.nhtsa.dot.gov

You can also obtain other information about motor vehicle safety from the hot line.

Required Documentation for Imported Motorcycles

If a Harley-Davidson motorcycle is imported into the United States, additional documentation is required to be eligible for the United States Harley-Davidson's Limited Warranty. A Harley-Davidson dealer can provide a form explaining the requirements.

Owner Contact Information

If you move from your present address, sell your motorcycle, or purchase a pre-owned Harley-Davidson motorcycle, see an authorized Harley-Davidson dealer to update your owner contact information.

This will provide Harley-Davidson with an accurate registration (as required by law in some countries), and will allow Harley-Davidson to notify you in the event of a recall or product program.

Updated owner information must also be on file with Harley-Davidson when transferring an Extended Service Plan Contract on a pre-owned motorcycle.

When updating your contact information, your authorized Harley-Davidson dealer will need your vehicle identification number (VIN), odometer mileage, and date of vehicle transfer (if applicable).

Limited Motorcycle Warranty

2011 HARLEY-DAVIDSON MOTORCYCLE LIMITED WARRANTY

24 Months/Unlimited Miles

Harley-Davidson warrants for any new 2011 Harley-Davidson motorcycle/sidecar that an authorized Harley-Davidson dealer will repair or replace without charge any parts found under normal use to be defective in factory materials or workmanship. Such repair or replacement will be Harley-Davidson's sole obligation and your sole remedy under this limited warranty.

THERE IS NO OTHER EXPRESS WARRANTY (OTHER THAN THE SEPARATE EMISSIONS AND NOISE LIMITED WARRANTIES) ON THE MOTORCYCLE/SIDECAR. ANY IMPLIED WARRANTY OF MERCHANTABILITY OR FITNESS FOR PARTICULAR PURPOSE IS LIMITED TO THE DURATION OF THIS LIMITED WARRANTY.

Some states do not allow limitations on how long an implied warranty lasts, so the above limitation may not apply to you.

TO THE FULLEST EXTENT ALLOWED BY LAW, NEITHER HARLEY-DAVIDSON NOR ITS AUTHORIZED DEALERS SHALL BE LIABLE FOR LOSS OF TIME, INCONVENIENCE, LOSS OF MOTORCYCLE/SIDECAR USE, COMMERCIAL LOSS OR OTHER INCIDENTAL OR CONSEQUENTIAL DAMAGES.

Some states do not allow the exclusion or limitation of incidental or consequential damages, so the above limitation or exclusion may not apply to you.

This limited warranty gives you specific legal rights, and you may have other rights which vary from state to state.

The following terms and conditions apply to this limited warranty:

Duration

1. The duration of this limited warranty is twenty-four months, starting from the earlier of (a) the date of initial retail purchase and delivery from an authorized Harley-Davidson dealer, or (b) the third anniversary of the last day of the model year of the motorcycle/sidecar. Your authorized Harley-Davidson dealer will submit an electronic Sales and Warranty Registration form to initiate your limited warranty.

2. Any unexpired portion of this limited warranty will be transferred to subsequent owners, upon the resale of the motorcycle/sidecar during the limited warranty period.

Owner's Obligations

To obtain warranty service, return your motorcycle/sidecar at your expense within the limited warranty period to an authorized dealer. The authorized Harley-Davidson dealer should be able to provide warranty service during normal business hours and as soon as possible, depending upon the workload of the authorized dealer's service department and the availability of necessary parts.

Harley-Davidson Motor Company, P.O. Box 653, Milwaukee, Wisconsin 53201, U.S.A.

Exclusions

This limited warranty will not apply to any motorcycle/sidecar as follows:

1. Which has not been operated or maintained as specified in the Owner's Manual.

2. Which has been abused, neglected, misused, improperly stored, used "off the highway," or used for racing or competition of any kind.

3. Which is not manufactured to comply with the laws of the market in which it is registered.

4. Installing off-road or competition parts to enhance performance, or making other unapproved modifications, may void all or part of your new motorcycle/sidecar limited warranty. See an authorized Harley-Davidson dealer for details.

5. Acts of God, war, riot, insurrection, natural disasters, including, but not limited to, nuclear contamination, lightning, forest fires, dust storms, hail storms, ice storms, earthquakes, floods, or for other circumstances out of Harley-Davidson's control.

6. Which has been in an accident, collision, dropped or struck.

Other Limitations

This warranty does not cover:

1. Parts and labor for normal maintenance as recommended in the Owner's Manual, or the replacement of parts due to normal wear and tear including, but not limited to, the following: tires, lubrication, oil and filter change, fuel system cleaning, battery maintenance, engine tune-up, spark plugs, brake, clutch, chain/belt adjustment and chain replacement.

2. Cosmetic concerns that arise as a result of owner abuse, lack of proper maintenance or environmental conditions (except concerns that result from defects in factory materials or workmanship, which are covered by this limited warranty for the duration of the limited warranty period).

3. Any cosmetic condition existing at the time of retail delivery that has not been documented by the authorized Harley-Davidson selling dealer prior to retail delivery.

4. Defects or damage to the motorcycle/sidecar caused by alterations outside of Harley-Davidson's factory specifications.

Important: Read Carefully

---

1. Authorized Harley-Davidson dealers are independently owned and operated and may sell non-Harley-Davidson products. Because of this, HARLEY-DAVIDSON IS NOT RESPONSIBLE FOR THE SAFETY, QUALITY, OR SUITABILITY OF ANY NON-HARLEY-DAVIDSON PART, ACCESSORY OR DESIGN MODIFICATION INCLUDING, BUT NOT LIMITED TO, LABOR WHICH MAY BE SOLD AND/OR INSTALLED BY AUTHORIZED HARLEY-DAVIDSON DEALERS.

2. This limited warranty is a contract between you and Harley-Davidson. It is separate and apart from any warranty you may receive or purchase from an authorized Harley-Davidson dealer. An authorized Harley-Davidson dealer is not authorized to alter, modify, or in any way change the terms and conditions of this limited warranty.

3. Any warranty work or parts replacement authorized by Harley-Davidson will not preclude Harley-Davidson from later relying on any exclusion where applicable.

Limited Noise Warranty

2011 HARLEY-DAVIDSON MOTORCYCLE NOISE CONTROL SYSTEM LIMITED WARRANTY

The following limited warranty applies to the noise control system, is in addition to the MOTORCYCLE LIMITED WARRANTY and EMISSION CONTROL SYSTEM LIMITED WARRANTY, and applies only to Harley-Davidson motorcycles sold in the U.S.

Harley-Davidson warrants to the first owner and each subsequent owner that this motorcycle is designed and built so as to conform at the time of sale with applicable regulations of the U.S. Environmental Protection Agency (as tested following F-76 Drive-By test procedure) and that it is free from defects in factory materials and workmanship which can cause this motorcycle not to meet U.S. Environmental Protection Agency Standards within one (1) year from initial retail purchase and delivery from an authorized Harley-Davidson dealer or one (1) year from the [second] anniversary of the last day of the model year of the motorcycle, or 3,730 miles 6,000 kilometers whichever occurs first. Any unexpired portion of this limited warranty will be transferred to subsequent owners, upon the resale of the motorcycle during the limited warranty period. If the motorcycle was used as a demonstrator or company motorcycle, then the limited warranty period may have started and/or expired prior to the initial retail sale. See an authorized Harley-Davidson dealer for details.

THERE IS NO OTHER EXPRESS WARRANTY (OTHER THAN THE SEPARATE MOTORCYCLE AND EMISSIONS LIMITED WARRANTIES) ON THE MOTORCYCLE. ANY IMPLIED WARRANTY OF MERCHANTABILITY OR FITNESS FOR PARTICULAR PURPOSE IS LIMITED TO THE DURATION OF THIS LIMITED WARRANTY.

Some states do not allow limitations on how long an implied warranty lasts, so the above limitation may not apply to you.

The limited one year warranty period shall begin on the date the motorcycle is delivered to the first retail purchaser or, if the motorcycle is placed in service as a demonstrator or company motorcycle prior to sale at retail, on the date it is first placed in service.

THE FOLLOWING ITEMS ARE NOT COVERED BY THE NOISE CONTROL SYSTEM LIMITED WARRANTY

1. Failures which arise as a result of misuse, alteration, or non-performance of maintenance as specified in the Owner's Manual.

2. Replacing, removing, or modifying any portion of the NOISE CONTROL SYSTEM (consisting of the exhaust system and air intake/cleaner assembly) with parts not certified to be noise legal for street use.

3. Any motorcycle on which the odometer mileage has been changed so that the mileage cannot be determined.

4. TO THE FULLEST EXTENT ALLOWED BY LAW, HARLEY-DAVIDSON AND ITS AUTHORIZED DEALERS SHALL NOT BE LIABLE FOR LOSS OF TIME, INCONVENIENCE, LOSS OF MOTORCYCLE USE, COMMERCIAL LOSS OR OTHER INCIDENTAL OR CONSEQUENTIAL DAMAGES.

Some states do not allow the exclusion or limitation of incidental or consequential damages, so the above limitation or exclusion may not apply to you.

Other Rights

This limited warranty gives you specific legal rights, and you may have other rights which vary from state to state.

Recommendations for Required Maintenance

It is recommended that any noise system maintenance be performed by an authorized Harley-Davidson dealer using genuine Harley-Davidson replacement parts. The maintenance, replacement or repair of the noise control system may be performed by any other qualified service outlet or individual. Non genuine Harley-Davidson parts may be used only if such parts are certified to comply with U.S. Environmental Protection Agency Standards.

Harley-Davidson Motor Company, P.O. Box 653, Milwaukee, Wisconsin 53201, U.S.A.

Limited Emission Warranty

2011 HARLEY-DAVIDSON EMISSION CONTROL SYSTEM LIMITED WARRANTY

The following limited warranty applies to the emission control system, is in addition to the MOTORCYCLE LIMITED WARRANTY and NOISE CONTROL SYSTEM LIMITED WARRANTY, and applies only to Harley-Davidson motorcycles sold in the U.S. Refer to the "CALIFORNIA EMISSIONS CONTROL WARRANTY STATEMENT" for additional warranty provisions applicable to California motorcycles.

Harley-Davidson Motor Company warrants to the first owner and each subsequent owner that this vehicle is designed, built, and equipped so as to conform at the time of sale with applicable regulations under section 7521 of Title 42 of the United States Code, and that it is free from defects in materials and workmanship which would cause this motorcycle to fail to conform with applicable regulations for five (5) years from the initial retail purchase and delivery from an authorized Harley-Davidson dealer (or five (5) years from the date the motorcycle is first placed in service, if it is first placed in service as a "demonstrator" or "company" motorcycle prior to delivery), or 18,641 miles 30,000 kilometers , whichever occurs first. Any unexpired portion of this limited warranty will be transferred to subsequent owners, upon the resale of the motorcycle during the warranty period.

THERE IS NO OTHER EXPRESS WARRANTY (OTHER THAN THE SEPARATE MOTORCYCLE AND NOISE LIMITED WARRANTIES) ON THE MOTORCYCLE. ANY IMPLIED WARRANTY OF MERCHANTABILITY OR FITNESS FOR PARTICULAR PURPOSE IS LIMITED TO THE DURATION OF THIS WARRANTY.

Some states do not allow limitations on how long an implied warranty lasts, so the above limitation may not apply to you.

The limited warranty period shall begin on the date the motorcycle is delivered to the first retail purchaser or, if the motorcycle is placed in service as a demonstrator or company motorcycle prior to sale at retail, on the date it is first placed in service.

THE FOLLOWING ITEMS ARE NOT COVERED BY THE EMISSION CONTROL SYSTEM LIMITED WARRANTY

1. Failures which arise as a result of misuse, alterations, accident or non-performance of

maintenance as specified in the Owner's Manual.

2. The replacement of parts (such as spark plugs, fuel and oil filters, etc.) used in required maintenance.

3. Any motorcycle on which the odometer mileage has been changed so that the mileage cannot be determined.

4. TO THE FULLEST EXTENT ALLOWED BY LAW, HARLEY-DAVIDSON AND ITS AUTHORIZED DEALERS SHALL NOT BE LIABLE FOR LOSS OF TIME, INCONVENIENCE, LOSS OF MOTORCYCLE USE, COMMERCIAL LOSS OR OTHER INCIDENTAL OR CONSEQUENTIAL DAMAGES.

Some states do not allow the exclusion or limitation of incidental or consequential damages, so the above limitation or exclusion may not apply to you.

Items Covered by this Emission Warranty

The emission performance warranty covers the following "warranted parts" only:

Basic Mechanical Components-Engine: Intake and exhaust valves; drive belts; manifold and cylinder head bolts; engine oil and filter; engine coolant; cooling system hoses, and connections; oil injection metering system

Fuel System: Fuel specification-octane rating, lead content; carburetor-idle RPM, mixture ratio; choke mechanism; fuel system filter and fuel system lines and connections; choke plate and linkage.

Ignition Components: ignition timing and advance systems, distributor breaker points and condenser; spark plugs; ignition wiring; operating parts of distributor.

Crankcase Ventilation System: PCV valve; ventilation hoses; oil filter breather cap; manifold inlet (carburetor spacer, etc.)

External Exhaust Emission Control System: Secondary air injection system hoses; air system manifolds; control valves and air pump; manifold reactors; catalytic converters; exhaust recirculation; water injection.

Evaporative Emission Control System: Engine compartment hose connections; carbon storage media; fuel tank pressure-relief valve operation; fuel vapor control valves.

Air Inlet Components: Carburetor air cleaner filter; hot air control valve.

Detailed instructions for proper maintenance and use of this motorcycle, including the time and/or mileage intervals at which such instructions are to be performed, may be found in this Owner's Manual under Regular Service Intervals.

Other Rights

This limited warranty gives you specific legal rights, and you may have other rights which vary from state to state.

Recommendations for Required Maintenance

It is recommended that any emission system maintenance be performed by an authorized Harley-Davidson dealer using genuine Harley-Davidson replacement parts. The maintenance, replacement or repair of the emissions control system may be performed by any other qualified service outlet or individual. Non-genuine Harley-Davidson parts may be used only if such parts are certified to comply with U.S. Environmental Protection Agency Standards.

Harley-Davidson Motor Company, P.O. Box 653, Milwaukee, Wisconsin 53201, U.S.A.

California Emissions Control Warranty

CALIFORNIA EMISSIONS CONTROL WARRANTY STATEMENT

Your Warranty Rights and Obligations

The California Air Resources Board and Harley-Davidson Motor Company are pleased to explain the emission control system warranty on your 2011 model year motorcycle. In California, new motor vehicles must be designed, built and equipped to meet the State's stringent anti-smog standards. Harley-Davidson Motor Company must warrant the emission control system on your motorcycle for the periods of time listed below provided there has been no abuse, unapproved modification, neglect or improper maintenance of your vehicle.

Your emission control system may include parts such as the carburetor or fuel-injection system, the ignition system, catalytic converter, and engine computer. Also included may be hoses, belts, connectors and other emission-related assemblies.

Where a warrantable condition exists, within the warranty period noted below, your authorized Harley-Davidson dealer will repair your motorcycle at no cost to you including diagnosis, parts and labor.

Manufacturer's Warranty Coverage

For a period of use of five years or 18,641 miles 30,000 kilometers , whichever first occurs, beginning on the date the vehicle is delivered to the ultimate purchaser:

If any emission related part on your motorcycle is defective, the part will be repaired or replaced by Harley-Davidson Motor Company. This is your emission control system DEFECTS WARRANTY.

Owner's Warranty Responsibilities

As the motorcycle owner, you are responsible for the performance of the required maintenance listed in your Owner's Manual. Harley-Davidson recommends that you retain all receipts covering maintenance on your motorcycle, but Harley-Davidson cannot deny emissions warranty coverage solely for the lack of receipts or for your failure to ensure the performance of all scheduled maintenance.

You are responsible for presenting your motorcycle to an authorized Harley-Davidson dealer as soon as a problem exists. The warranty repairs should be completed in a reasonable amount of time, not to exceed 30 days.

As the motorcycle owner, you should also be aware that Harley-Davidson may deny you warranty coverage if your motorcycle or a part has failed due to abuse, neglect, improper maintenance or unapproved modifications.

If you have any questions regarding your warranty rights and responsibilities, you should contact Harley-Davidson Customer Service Department at (414) 343-4056, or the California Air Resources Board at 9528 Telstar Ave., El Monte, California 91731.

Additional Warranty Terms

The warranty period starts the date the motorcycle is delivered to the ultimate purchaser or, if the motorcycle is placed in service as a demonstrator or company motorcycle prior to sale at retail, the date it is first placed in service.

The emission control system of each new Harley-Davidson® motorcycle was designed, built and tested using only Genuine Harley-Davidson parts and with these parts the motorcycle is certified as being in conformity with California emission control regulations.

We recommend that you go only to an authorized Harley-Davidson Dealer for repairs under this warranty. The dealer has factory-trained mechanics and Genuine Harley-Davidson parts. However, in the case of an "emergency" (as defined below), you could have repairs performed at any available service establishment or by the owner, using any replacement part. An authorized Harley-Davidson dealer not being reasonably available, or a part not being available within a reasonable time period (not to exceed 30 days from the time the motorcycle is initially presented to a Harley-Davidson dealer for repair) constitutes an emergency. Harley-Davidson will reimburse the owner for such repairs, including diagnosis, only if it is established that the repairs are covered under this emission warranty. Harley-Davidson's parts reimbursement, however, will not exceed our suggested retail price for all warranted parts replaced and our labor reimbursement will be limited to our recommended time allowances for emission system repairs at the geographically appropriate hourly labor rate.

To obtain reimbursement from Harley-Davidson for such emergency repairs, you must keep all failed parts and original receipts, so you can present them to an authorized Harley-Davidson dealer for inspection. Harley-Davidson recommends that you bring your motorcycle to an authorized dealer for inspection to ensure that the emergency repairs were done properly.

Remember: Use of replacement parts which are not equal in quality to Genuine Harley-Davidson parts may impair the effectiveness of the emission control system or otherwise damage your motorcycle. If other than Genuine Harley-Davidson parts are used for maintenance, replacement or repair of components affecting emission control, you should obtain written assurances that such non-Harley-Davidson parts are warranted by their manufacturer to be equal in quality to Genuine Harley-Davidson parts in both performance and durability. The use of non-Harley-Davidson replacement parts does not invalidate the existing warranty, if any, on other Harley-Davidson components unless the non-Harley-Davidson parts cause damage to warranted parts or result in the creation of an emissions non-compliant vehicle. However, HARLEY-DAVIDSON ASSUMES NO LIABILITY UNDER THIS WARRANTY WITH RESPECT TO ANY PARTS WHICH ARE NOT GENUINE HARLEY-DAVIDSON PARTS, unless Harley-Davidson parts cause damage to non-genuine Harley-Davidson parts.

What Is Covered By This Emission Warranty

The emission control system warranty covers the following "warranted parts" only:

- Intake manifold
- Air cleaner backplate with solenoid operated door, as applicable
- Ignition Module
- Spark plug at first 10,000 mi 16,000 km
- Ignition coil
- Ignition wires
- Charcoal canister
- Vapor valve
- Catalytic converter mufflers, as applicable
- VOES switch
- Purge control valves
- MAP sensor
- Petcock valve

Fuel Injection:

- Induction module (including all sensors, injectors and all their associated connectors)
- Cylinder head temperature sensor
- Barometric pressure sensor
- Electronic control unit
- Regulator/fuel Ppump (for leaks and/or high and low pressure failures)
- Oxygen sensors

Fuel Tank: (non-cosmetic failures only)

- Leaks
- Fuel vapor separator
- Fuel cap

If used on the above: hoses, clamps, fittings, tubing, sealing gaskets and mounting hardware

What Is Not Covered By This Emission Warranty

The emission control system warranty does not cover:

Malfunctions in any "warranted parts" caused by any of the following: abuse, misuse, unapproved modification or alteration, tampering, disconnection, or improper or inadequate maintenance. The warranty also does not cover replacement of listed parts in the event that the vehicle has been rendered emissions non-compliant in the state of California through actions noted above.

Damage resulting from accident, acts of nature or other events beyond the control of Harley-Davidson.

The repair or replacement of "warranted parts" which are scheduled for replacement prior to 18,641 mi 30,000 km (such as spark plugs, which are scheduled for replacement at 10,000 mi 16,000 km , once these parts have been replaced at the first replacement interval as part of required maintenance services.

Repairs and services performed by anyone other than an authorized Harley-Davidson Dealer (except in case of emergency as defined above).

Loss of time, inconvenience, loss of use of the motorcycle, towing of the vehicle, or commercial loss and/or consequential damages.

Repairs on any motorcycle of which odometer mileage has been changed so that mileage cannot be readily determined.

Maintenance Scheduling

Regular Service Intervals

Regular lubrication and maintenance will help keep your new Harley-Davidson operating at peak performance. Your Harley-Davidson dealer knows best how to service your motorcycle with factory approved methods and equipment assuring you of thorough and competent workmanship.

NOTES:

- *Refer to Regular Service Intervals: 2011 Softail Models. Regular maintenance interval operations are required to keep your new motorcycle warranty in force. The use of other than Harley-Davidson approved parts and service procedures may void the warranty. Any alterations to the emission system components, such as the carburetor and exhaust system, may be in violation of Federal and State laws.*
- *Refer to Owner's Maintenance Records: All Softail Models except Springers and Owner's Maintenance Records: FLSTSB. When servicing your motorcycle, bring this owner's manual to the dealership and complete information needed in the blank columns listed.*

⚠WARNING

Perform the service and maintenance operations as indicated in the regular service interval table. Lack of regular maintenance at the recommended intervals can affect the safe operation of your motorcycle, which could result in death or serious injury. (00010a)

⚠WARNING

If you operate your motorcycle under adverse conditions (severe cold, extreme heat, very dusty environment, very bad roads, through standing water, etc.), you should perform the regular maintenance intervals more frequently to ensure the safe operation of your motorcycle. Failure to maintain your motorcycle could result in death or serious injury. (00094a)

Regular Service Intervals: 2011 Softail Models

ITEM SERVICED	PROCEDURE	1000 mi 1600 km	5000 mi 8000 km	10,000 mi 16,000 km	15,000 mi 24,000 km	20,000 mi 32,000 km	25,000 mi 40,000 km	30,000 mi 48,000 km	NOTES
Engine oil and filter	Replace	X	X	X	X	X	X	X	
Oil lines and brake system	Inspect for leaks, contact, or abrasion	X	X	X	X	X	X	X	1, 3
Air cleaner	Inspect, service as		X	X	X	X	X	X	

Air cleaner	Inspect, service as required		X	X	X	X	X	X	
Exhaust system	Inspect for leaks, cracks, and loose or missing fasteners or heat shields	X	X	X	X	X	X	X	3
Tires	Check pressure, inspect tread	X	X	X	X	X	X	X	
Wheel spokes (if equipped)	Check tightness	X	X			X			1, 5
Primary chaincase lubricant	Replace	X		X		X		X	
Transmission lubricant	Replace	X				X			
Clutch	Check adjustment	X	X	X	X	X	X	X	1
Drive belt and sprockets	Inspect, adjust belt	X	X	X	X	X	X	X	1
Throttle, brake, and clutch controls	Check, adjust and lubricate	X	X	X	X	X	X	X	1
Jiffy stand	Inspect and lubricate	X		X		X		X	1
Fuel lines and fittings	Inspect for leaks, contact or abrasion	X	X	X	X	X	X	X	1, 3
Fuel filter in fuel tank	Replace						X		1
Brake fluid	Inspect sight glass	X	X	X	X	X	X	X	4
Brake pads and discs	Inspect for wear	X	X	X	X	X	X	X	
Spark plugs	Inspect		X	X	X		X	X	
	Replace					X			
Electrical equipment and switches	Check operation	X	X	X	X	X	X	X	
Front fork oil	Replace	Replace at 50,000 miles 80,000 kilometers .							1, 6
Steering head bearings (Softail models)	Adjust	X		X		X		X	1
	Lubricate			X		X		X	2
Steering head bearings	Adjust	X		X		X		X	1
	Lubricate	Lubricate every 2500 miles 4000 kilometers .							1, 8

(Springer models)									
Windshield bushings (if equipped)	Inspect			X		X		X	1
Springer rocker bearings	Adjust	X		X		X		X	1, 7
Critical fasteners	Check tightness	X		X		X		X	1, 3
Battery	Check battery and clean connections								3
Road test	Verify component and system functions	X	X	X	X	X	X	X	

NOTES:

1. Should be performed by an authorized Harley-Davidson dealer, unless you have the proper tools, service data and are mechanically qualified.

2. Disassemble, lubricate and inspect every 30,000 miles 48,000 kilometers .

3. Perform annually or at specified intervals, whichever comes first.

4. Change D.O.T. 4 brake fluid and flush system every two years.

5. Perform spoke tension check at the 1000, 5000, 20,000 mile services and every 15,000 mile interval thereafter. Not all vehicles are equipped with spoke wheels. Consult appropriate topic in service manual.

6. Replace fork oil and inspect every 50,000 miles 80,000 kilometers .

7. Adjust at 500 miles 800 kilometers .

8. Disassemble, lubricate and inspect every 20,000 miles 32,000 kilometers .

Owner's Maintenance Records: All Softail Models except Springers

SERVICE MILE INTERVAL	DATE	DEALER NUMBER	TECHNICIAN NAME	TECHNICIAN SIGNATURE
1000 mi (1600 km)				
5000 mi (8000 km)				
10,000 mi (16,000 km)				
15,000 mi (24,000 km)				
20,000 mi				

(32,000 km)				
25,000 mi (40,000 km)				
30,000 mi (48,000 km)				
35,000 mi (56,000 km)				
40,000 mi (64,000 km)				
45,000 mi (72,000 km)				
50,000 mi (80,000 km)				

Owner's Maintenance Records: FLSTSB

SERVICE MILE INTERVAL	DATE	DEALER NUMBER	TECHNICIAN NAME	TECHNICIAN SIGNATURE
500 mi (800 km)				
1000 mi (1600 km)				
2500 mi (4000 km)				
5000 mi (8000 km)				
7500 mi (12,000 km)				
10,000 mi (16,000 km)				
12,500 mi (20,000 km)				
15,000 mi (24,000 km)				
17,500 mi				

(28,000 km)				
20,000 mi (32,000 km)				
22,500 mi (36,000 km)				
25,000 mi (40,000 km)				
27,500 mi (44,000 km)				
30,000 mi (48,000 km)				
32,500 mi (52,000 km)				
35,000 mi (56,000 km)				
37,500 mi (60,000 km)				
40,000 mi (64,000 km)				
42,500 mi (68,000 km)				
45,000 mi (72,000 km)				
47,500 mi (76,000 km)				
50,000 mi (80,000 km)				

Service Literature

Refer to Service Literature: 2011 Softail Models. Visit any Harley-Davidson dealer or go to www.harley-davidson.com to purchase a service or parts manual for your motorcycle. Factory authorized manuals are the most complete and detailed source of information outside of your Harley-Davidson dealer.

Service Literature: 2011 Softail Models

DOCUMENT	LANGUAGE	PART NUMBER
Service Manual	English	99482-11A
	Brazilian Portuguese	99482-11BRA
	French	99482-11FRA
	German	99482-11DEA
	Spanish	99482-11ESA
	Italian	99482-11ITA
	Simplified Chinese	99482-11ZHA
Electrical Diagnostic Manual	English	99498-11
	Brazilian Portuguese	99498-11BR
	French	99498-11FR
	German	99498-11DE
	Spanish	99498-11ES
	Italian	99498-11IT
	Simplified Chinese	99498-11ZH
Parts Catalog	English	99455-11A

H-D Michigan, Inc. Trademark Information

Harley, Harley-Davidson, H-D, Bar & Shield, Cross Bones, Digital Tech, Digital Technician, Digital Technician II, Dyna, Electra Glide, Evolution, Fat Bob, Fat Boy, Glaze, Gloss, H-D, H-Dnet.com, HD, Harley, Harley-Davidson, Heritage Softail, Low Rider, Night Rod, Nightster, Night Train, Profile, Revolution, Road Glide, Road King, Road Tech, Rocker, Softail, Sportster, Street Glide, Street Rod, Sun Ray, Sunwash, Tech Link, Twin Cam 88, Twin Cam 88B, Twin Cam 96, Twin Cam 96B, Twin Cam 103, Twin Cam 103B, Twin Cam 110, Twin Cam 110B, Tour-Pak, Screamin' Eagle, Softail, Super Glide, SYN3, Ultra Classic, V-Rod, VRSC and Harley-Davidson Genuine Motor Parts and Genuine Motor Accessories are among the trademarks of H-D Michigan, Inc.

Product Registered Marks

Apple, Alcantara S.p.A., Allen, Amp Multilock, Bluetooth, Brembo, Delphi, Deutsch, Dunlop, Dynojet, Fluke, G.E. Versilube, Garmin, Gunk, Hydroseal, Hylomar, iPhone, iPod, Kevlar, Lexan, Loctite, Lubriplate, Keps, K&N, Magnaflux, Marson Thread-Setter Tool Kit, MAXI fuse, Molex, Michelin, MPZ, Mulitilock, nano, NGK, Novus, Packard, Pirelli, Permatex, Philips, PJ1, Pozidriv, Robinair, S100, Sems, Snap-on, Teflon, Threadlocker, Torca, Torco, TORX, Tufoil, Tyco, Ultratorch, Velcro, X-Acto, XM Satellite Radio, and zumo are among the trademarks of their respective owners.