Safety First

Safe Operating Rules: VRSC Models

Before operating your new motorcycle it is your responsibility to read and follow the operating and maintenance instructions in this manual, and follow these basic rules for your personal safety.

- Know and respect the rules of the road (see RULES OF THE ROAD section). Carefully read and observe the rules contained in the RIDING TIPS booklet accompanying this Owner's Manual. Read and familiarize yourself with the contents of the MOTORCYCLE HANDBOOK for your state.
- Before starting engine, check for proper operation of brake, clutch, shifter, throttle controls, correct fuel and oil supply.

⚠WARNING

Do not use aftermarket parts and custom made front forks which can adversely affect performance and handling. Removing or altering factory installed parts can adversely affect performance and could result in death or serious injury. (00001a)

- Use only Harley-Davidson approved parts and accessories. Use of certain other manufacturer's performance parts will void your new motorcycle warranty. See your Harley-Davidson dealer for details.

⚠WARNING

Stop the engine when refueling or servicing the fuel system. Do not smoke or allow open flame or sparks near gasoline. Gasoline is extremely flammable and highly explosive, which could result in death or serious injury. (00002a)

⚠WARNING

Do not remove radiator filler cap when engine is hot. The cooling system is under pressure and hot coolant and steam can escape, which could cause severe burns. Allow engine to cool before servicing the cooling system. (00091a)

⚠CAUTION

At operating temperature, the radiator and oil cooler contain hot fluids. Contact with the radiator or oil cooler can result in minor or moderate burns. (00141a)

When refueling your motorcycle, the following rules should be observed.

- Refuel in a well ventilated area with the engine turned off.
- Remove fuel filler cap slowly.
- Do not smoke or allow open flames or sparks when refueling or servicing the fuel system.
- Leave air space to allow for fuel expansion.

⚠WARNING

Do not store motorcycle with gasoline in tank within the home or garage where open flames, pilot lights, sparks or electric motors are present. Gasoline is extremely flammable and highly explosive, which could result in death or serious injury. (00003a)

⚠WARNING

Engine exhaust from this product contains chemicals known to the State of California to cause cancer and birth defects or other reproductive harm. (00004e)

⚠WARNING

Wheel weights on wheels without spokes contain lead and lead compounds, chemicals known to the State of California to cause cancer and birth defects or other reproductive harm. (00356b)

⚠WARNING

Do not run motorcycle in a closed garage or confined area. Inhaling motorcycle exhaust, which contains poisonous carbon monoxide gas, could result in death or serious injury. (00005a)

⚠WARNING

The jiffy stand locks when placed in the full forward (down) position with vehicle weight on it. If the jiffy stand is not in the full forward (down) position with vehicle weight on it, the vehicle can fall over which could result in death or serious injury. (00006a)

⚠WARNING

Be sure jiffy stand is fully retracted before riding. If jiffy stand is not fully retracted, it can contact the road surface causing a loss of vehicle control, which could result in death or serious injury. (00007a)

- A new motorcycle must be operated according to the special break-in procedure. See Break-in Riding Rules: VRSC Models.
- Operate motorcycle only at moderate speed and out of traffic until you have become thoroughly familiar with its operation and handling characteristics under all conditions.

NOTE:

We recommend that you obtain information and formal training in the correct motorcycle riding technique. The Motorcycle Safety Foundation® offers beginning and advanced rider safety courses. Call (949)727-3227 for information.

⚠WARNING

Travel at speeds appropriate for road and conditions and never travel faster than posted speed limit. Excessive speed can cause loss of vehicle control, which could result in death or serious injury. (00008a)

- Do not exceed the legal speed limit or drive too fast for existing conditions. Always reduce speed when poor driving conditions exist. High speed increases the influence of any other condition affecting stability and increases the possibility of loss of control.
- Pay strict attention to road surfaces and wind conditions. Any two wheeled vehicle may be subject to upsetting forces such as wind blasts from passing trucks, holes in the pavement, rough road surfaces, rider control error, etc. These forces may influence the handling characteristics of your motorcycle. If this happens, reduce speed and guide the motorcycle with a relaxed grip to a controlled condition. Do not brake abruptly or force the handlebar. This may aggravate an unstable condition.
- Keep cargo weight concentrated close to the motorcycle and as low as possible to minimize the change in the motorcycle's center of gravity. Distribute weight evenly on both sides of the vehicle and do not load bulky items too far behind the rider or add weight to the handlebars or front forks. Do not exceed maximum specified load in each saddlebag.

NOTE:

New riders should gain experience under various conditions while driving at moderate speeds.

- Operate your motorcycle defensively. Remember, a motorcycle does not afford the same protection as an automobile in an accident. One of the most common accident situations occurs when the driver of the other vehicle fails to see or recognize a motorcycle and turns left into the on-coming motorcyclist. Operate only with headlamp on.
- Wear an approved helmet, clothing, and foot gear suited for motorcycle riding. Bright or light colors are best for greater visibility in traffic, especially at night. Avoid loose, flowing garments and scarves.

⚠WARNING

Avoid contact with exhaust system and wear protective clothing that completely covers legs while riding. Exhaust pipes and mufflers get very hot when engine is running and remain too hot to touch, even after engine is turned off. Failure to wear protective clothing could result in burns or other serious injury. (00009a)

- When carrying passengers, it is your responsibility to instruct them on proper riding

procedures. (See Riding Tips included in your Harley-Davidson Owner's Kit.)

- Do not allow other individuals, under any circumstances, to operate your motorcycle unless you know they are experienced, licensed riders and are thoroughly familiar with the operation of your particular motorcycle.

- Protect your motorcycle against theft. After parking your motorcycle, lock the steering head and remove ignition key from switch. Set security alarm if present.
- Safe motorcycle operation requires alert mental judgment combined with a defensive driving attitude. Do not allow fatigue, alcohol or drugs to endanger your safety or that of others.
- Vehicles equipped with a sound system should have the volume adjusted to a nondistracting level before operating vehicle.
- Maintain your motorcycle in proper operating condition in accordance with Regular Service Intervals: 2006 VRSC Models. Particularly important to motorcycle stability is proper tire inflation pressure, tread condition, and proper adjustment of wheel bearings and steering head bearings.

⚠WARNING

Do not operate vehicle with forks locked. Locking the forks restricts the vehicle's turning ability, which could result in death or serious injury. (00035a)

⚠WARNING

Perform the service and maintenance operations as indicated in the regular service interval table. Lack of regular maintenance at the recommended intervals can affect the safe operation of your motorcycle, which could result in death or serious injury. (00010a)

⚠WARNING

Do not operate motorcycle with loose, worn or damaged steering or suspension systems. Contact a Harley-Davidson dealer for repairs. Loose, worn or damaged steering or suspension components can adversely affect stability and handling, which could result in death or serious injury. (00011a)

⚠WARNING

Regularly inspect shock absorbers and front forks. Replace leaking, damaged or worn parts that can adversely affect stability and handling, which could result in death or serious injury. (00012a)

⚠WARNING

Use Harley-Davidson replacement fasteners. Aftermarket fasteners can adversely affect performance, which could

result in death or serious injury. (00013a)

- See a Harley-Davidson service manual for proper torque values.
- Aftermarket fasteners may not have the specific property requirements to perform properly.

⚠WARNING

Be sure tires are properly inflated, balanced and have adequate tread. Inspect your tires regularly and see a Harley-Davidson dealer for replacements. Riding with excessively worn, unbalanced or under-inflated tires can adversely affect stability and handling, which could result in death or serious injury. (00014a)

⚠WARNING

Replace punctured or damaged tires. In some cases, small punctures in the tread area may be repaired from within the demounted tire by a Harley-Davidson dealer. Speed should NOT exceed 50 mph (80 km/h) for the first 24 hours after repair, and the repaired tire should NEVER be used over 80 mph (130 km/h). Failure to follow this warning could result in death or serious injury. (00015a)

⚠WARNING

Do not exceed the motorcycle's Gross Vehicle Weight Rating (GVWR) or Gross Axle Weight Rating (GAWR). Exceeding these weight ratings can affect stability and handling, which could result in death or serious injury. (00016e)

- GVWR is the sum of the weight of the motorcycle, accessories, and the maximum weight of the rider, passenger and cargo that can be safely carried.
- GAWR is the maximum amount of weight that can be safely carried on each axle.
- The GVWR and GAWR are shown on the information plate, located on the frame down tube.

⚠WARNING

Do not tow a disabled motorcycle. Towing can adversely affect stability and handling, which could result in death or serious injury. (00017a)

⚠WARNING

Do not pull a trailer with a motorcycle. Pulling a trailer can cause tire overload, reduced braking efficiency and adversely affect stability and handling, which could result in death or serious injury. (00018b)

⚠CAUTION

Direct contact of D.O.T. 4 brake fluid with eyes can cause irritation. Avoid eye contact. In case of eye contact flush with large amounts of water and get medical attention. Swallowing large amounts of D.O.T. 4 brake fluid can cause digestive discomfort. If swallowed, obtain medical attention. Use in well ventilated area. KEEP OUT OF REACH OF CHILDREN. (00240a)

⚠WARNING

Batteries, battery posts, terminals and related accessories contain lead and lead compounds, and other chemicals known to the State of California to cause cancer and birth defects or other reproductive harm. Wash hands after handling. (00019d)

⚠WARNING

Consult a Harley-Davidson dealer regarding any questions or problems that occur in the operation of your motorcycle. Failure to do so can aggravate an initial problem, cause costly repairs, cause an accident and could result in death or serious injury. (00020a)

- Be sure all equipment required by federal, state and local law is installed and in good operating condition.

Rules of the Road

- Keep to the right side of the road centerline when meeting other vehicles coming in the opposite direction. Ride to left of center of your lane to avoid oily pavement ahead.
- Always sound your horn, actuate your turn signals, and exercise caution when passing other vehicles going in the same direction. Never try to pass another vehicle going in the same direction at street intersections, on curves, or when going up or down a hill.
- At street intersections give the right-of-way to the vehicle on your right. Do not presume you have the right-of-way, as the other driver may not know it is your turn.
- Always signal when preparing to stop, turn or pass.
- All traffic signs, including those used for the control of traffic at intersections, should be obeyed promptly. SLOW DOWN signs near schools and CAUTION signs at railroad crossings should always be observed and your actions governed accordingly.
- When intending to turn to the left, signal at least 100 feet (30.5 meters) before reaching the turning point. Move over to the centerline of the street (unless local rules require otherwise), slow down, enter the intersection of the street and then turn carefully to the left.
- Never anticipate a traffic light. When a change is indicated from GO to STOP (or vice versa) in the traffic control systems at intersections, slow down and wait for the light to change. Never run through a yellow or red traffic light.
- While turning either right or left, watch for pedestrians, animals, as well as vehicles.
- Do not leave the curb or parking area without signaling. Be sure your way is clear to enter moving traffic. A moving line of traffic always has the right-of-way.
- Be sure your license plate is installed in the position specified by law and is clearly visible at

all times. Keep the plate clean.
- Ride at a safe speed that is consistent with the type of highway you are on. Pay strict attention to whether the road is dry, oily, icy or wet.
- Watch for debris such as leaves or loose gravel.
- Weather and traffic conditions on the highway dictate adjusting your speed and driving habits accordingly.

Accessories and Cargo

Harley-Davidson Motor Company cannot test and make specific recommendations concerning every accessory or combination of accessories sold. Therefore, the rider must be responsible for safe operation of the motorcycle when installing accessories or carrying additional weight.

⚠WARNING

See the Accessory and Cargo section in your Owner's Manual. Improper loading of cargo or installation of accessories can affect motorcycle stability and handling, which could result in death or serious injury. (00021a)

⚠WARNING

Do not exceed the motorcycle's Gross Vehicle Weight Rating (GVWR) or Gross Axle Weight Rating (GAWR). Exceeding these weight ratings can affect stability and handling, which could result in death or serious injury. (00016e)

- GVWR is the sum of the weight of the motorcycle, accessories, and the maximum weight of the rider, passenger and cargo that can be safely carried.
- GAWR is the maximum amount of weight that can be safely carried on each axle.
- The GVWR and GAWR are shown on the information plate which is located on the frame down tube.

⚠WARNING

Do not pull a trailer with a motorcycle. Pulling a trailer can cause tire overload, reduced braking efficiency and adversely affect stability and handling, which could result in death or serious injury. (00018b)

Accessory and Cargo Guidelines

The following guidelines should be used when equipping a motorcycle, carrying passengers and/or cargo.

⚠WARNING

Travel at speeds appropriate for road and conditions and

never travel faster than posted speed limit. Excessive speed can cause loss of vehicle control, which could result in death or serious injury. (00008a)

- Do not exceed the legal speed limit or drive too fast for existing conditions. Always reduce speed when poor driving conditions exist. High speed increases the influence of any other condition affecting stability and increases the possibility of loss of control.
- Pay strict attention to road surfaces and wind conditions. Any two wheeled vehicle may be subject to upsetting forces such as wind blasts from passing trucks, holes in the pavement, rough road surfaces, rider control error, etc. These forces may influence the handling characteristics of your motorcycle. If this happens, reduce speed and guide the motorcycle with a relaxed grip to a controlled condition. Do not brake abruptly or force the handlebar. This may aggravate an unstable condition.
- Keep cargo weight concentrated close to the motorcycle and as low as possible. This minimizes the change in the motorcycle's center of gravity.
- Distribute weight evenly on both sides of the vehicle.
- Do not load bulky items too far behind the rider or add weight to the handlebars or front forks.
- Do not exceed maximum specified load in each saddlebag.
- Luggage racks are designed for lightweight items. Do not overload racks.
- Be sure cargo is secure and will not shift while riding and recheck the cargo periodically. Accessories that change the operator's riding position may increase reaction time and affect handling of the motorcycle.
- Additional electrical equipment may overload the motorcycle's electrical system possibly resulting in electrical system and/or component failure.

⚠WARNING

The front and/or rear guard(s) can provide limited leg and cosmetic vehicle protection under unique circumstances. (Fall over while stopped, very slow speed slide.) It is not made or intended to provide protection from bodily injury in a collision with another vehicle or any other object. (00022a)

Large surfaces such as fairings, windshields, back rests, and luggage racks can adversely affect handling. Only genuine Harley-Davidson items designed specifically for the motorcycle model should be used with proper installation.

⚠WARNING

Do not use aftermarket parts and custom made front forks which can adversely affect performance and handling. Removing or altering factory installed parts can adversely affect performance and could result in death or serious injury. (00001a)

⚠WARNING

Only Touring Harley-Davidson Motorcycles are suitable for sidecar use. Consult a Harley-Davidson dealer. Use of

motorcycles other than Touring models with sidecars could result in death or serious injury. (00040a)

Identification

2006 VRSC Models

This section provides left and right side views of your 2006 VRSC model motorcycle. Please refer to the CONTROLS AND INDICATORS and OPERATION sections for specific details about each component.

NOTE:

Specifications in this publication may not match those of official certification in some markets due to timing of publication printing, variance in testing methods, and/or vehicle differences. Customers seeking officially recognized regulatory specifications for their vehicle should refer to certification documents and/or contact their respective dealer or distributor.

1. Tachometer/speedometer
2. Fuel gauge
3. Clutch reservoir
4. Battery
5. Air cleaner
6. Gear shift lever
7. Dipstick
8. Cooling fans
9. Radiator

2006 VRSCR Street Rod - Left Side View

1. Fuel filler cap (under seat)
2. Water pump
3. Thermostat
4. Odometer reset switch
5. Front brake master cylinder and switch
6. Fork lock
7. Coolant overflow bottle
8. Maxi-fuse
9. Ignition switch
10. Rear brake master cylinder

2006 VRSCR Street Rod - Right Side View

1. Tachometer/speedometer
2. Fuel gauge
3. Clutch reservoir
4. Battery
5. Air cleaner
6. Engine oil drain
7. Engine oil filter
8. Dipstick
9. Oil cooler
10. Radiator
11. ECM

2006 VRSCA V-Rod - Left Side View

1. Fuel filler cap (under seat)
2. Ignition switch/seat release
3. Water pump
4. Thermostat
5. Odometer reset switch
6. Front brake master cylinder and switch
7. Fork lock
8. Coolant overflow bottle
9. Maxi-fuse
10. Rear brake reservoir
11. Rear brake master cylinder

2006 VRSCA V-Rod - Right Side View

1. Tachometer/speedometer
2. Fuel gauge
3. Clutch reservoir
4. Battery
5. Air cleaner
6. Gear shift lever
7. Dipstick
8. Oil cooler
9. Radiator
10. ECM

2006 VRSCD Night Rod - Left Side View

1. Fuel filler cap (under seat)
2. Ignition switch/seat release
3. Water pump
4. Thermostat
5. Odometer reset switch
6. Front brake master cylinder and switch
7. Fork lock
8. Coolant overflow bottle
9. Maxi-fuse (under cover)
10. Rear brake reservoir
11. Rear brake master cylinder

2006 VRSCD Night Rod - Right Side View

Vehicle Identification Number: VRSC Models

See V.I.N. Stamping Location: VRSCR Model. The full 17-digit serial or Vehicle Identification Number (V.I.N.) is stamped on the steering head and on a label located on the left frame tube above the front engine cylinder.

An abbreviated V.I.N. is stamped on the left side crankcase above the sump.

NOTE:

Always give the full 17-digit Vehicle Identification Number when ordering parts or making any inquiry about your motorcycle.

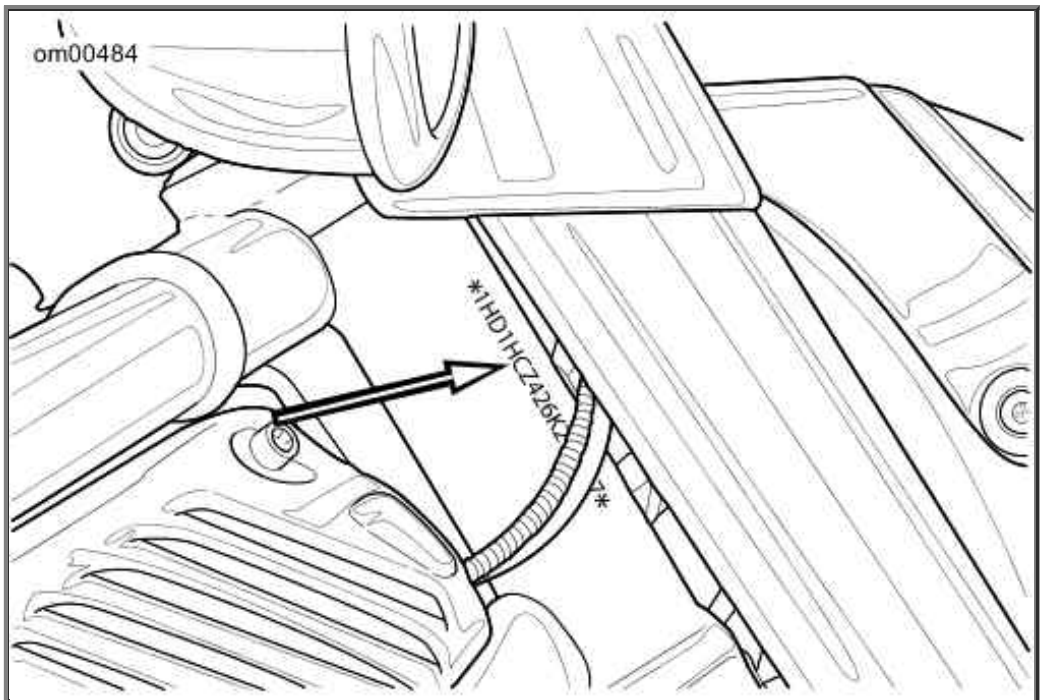

V.I.N. Stamping Location: VRSCR Model

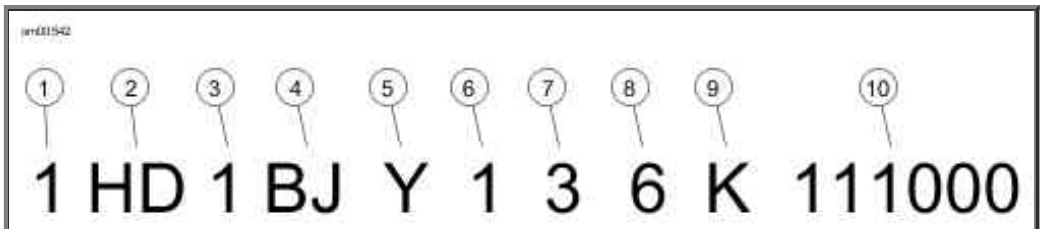

1. Market designation (1 character)
2. Manufacturer (2 characters)
3. Motorcycle type (1 character)
4. Model (2 characters)
5. Engine type (1 character)
6. Introduction date (1 character)
7. V.I.N. check digit (1 character)
8. Model year (1 character)
9. Assembly plant (1 character)
10. Sequential number (6 characters)

Typical Harley-Davidson Vehicle Identification Number

2006 Harley-Davidson VRSC V.I.N. Breakdown

POSITION	DESCRIPTION	POSSIBLE VALUES
1	Market designation	1=Originally manufactured for sale **within** the United States 5=Originally manufactured for sale **outside** the United States
2	Manufacturer	HD=Harley-Davidson
3	Motorcycle type	1=Heavyweight motorcycle 901cc and larger
4	Model	HA=VRSCA HC=VRSCR HD=VRSCD
5	Engine type	A=Revolution, 1130cc liquid-cooled, fuel injected 105 HP HDI only Z=Revolution, 1130cc liquid-cooled, fuel injected
6	Introduction date	1=Regular 2=Mid-year 3=California/regular 4=Cosmetic changes and/or special introductory date 5=California/cosmetic changes and/or special introductory date 6=California/mid-year
7	V.I.N. check digit	Can be 0-9 or X
8	Model year	6=2006
9	Assembly plant	K=Kansas City, MO USA
10	Sequential number	varies

Specifications

Specifications: 2006 VRSC Models

Capacities: 2006 VRSC Models

ITEM	U.S.	LITERS
Fuel tank: VRSCR	5.0 gal	18.9
Fuel tank: VRSCA/D	3.7 gal	14.0
Oil capacity with filter	5 qt.	4.3
Coolant capacity	2.5 qt.	2.4

Ignition System: 2006 VRSC Models

ITEM	SPECIFICATION	
Timing setting	Not adjustable	
Battery	12 volt, 12 amp/hr., 200 CCA	
Spark plug type	10R12A	
Spark plug gap	0.035 in.	0.89 mm
Spark plug torque	17 ft-lbs	23 Nm

Engine: 2006 VRSC Models

ITEM	SPECIFICATION	
Number of cylinders	2	
Type	4-cycle, DOHC, 60 degree V-Type, water cooled	
Compression ratio	11.3-1	
Bore	3.94 in.	100.00 mm
Stroke	2.84 in.	72.00 mm
Displacement	69 cu. in.	1130cc
Torque: VRSCA	74 ft-lbs @7000 RPM	100 Nm @7000 RPM
Torque: VRSCD/R	80 ft-lbs @7000 RPM	108 Nm @7000 RPM

Drivetrain: 2006 VRSC Models

COMPONENT	TYPE
Primary drive	gear
Final drive	belt
Rear sprocket	compensated
Clutch	hydraulic

Transmission: 2006 VRSC Models

ITEM	SPECIFICATION
Type	foot shift
Speeds	5 forward
Gears	1st, 5th spur gears 2nd, 3rd, 4th helical gears

Sprocket Teeth: 2006 VRSC Models

ITEM	DOMESTIC	INTERNATIONAL
Transmission	28	30
Rear wheel	72	
Ratio	0.42	0.39

Gear Ratios: 2006 VRSC Models

GEAR	DOMESTIC	INTERNATIONAL
1st gear	11.752	10.969
2nd gear	7.898	7.371
3rd gear	6.322	5.900
4th gear	5.459	5.095
5th gear	4.889	4.563

Weights: 2006 VRSC Models

ITEM	VRSCA		VRSCD		VRSCR	
	LB.	KG	LB.	KG	LB.	KG
Weight (as shipped from factory)	596	270.6	607	276	618	281
GVWR	1060	481	1060	481	1060	481
GAWR Front	372	169	372	169	372	169
GAWR Rear	688	312	688	312	688	312

Tire Sizes: 2006 VRSC Models

MODEL	MOUNT	SIZE	NUMBER
VRSCA	Front	19 in.	D207 F120/70ZR19 60W
	Rear	18 in.	D207 180/55ZR18 74W
VRSCD	Front	19 in.	D207 F120/70ZR19 60W
	Rear	18 in.	D207 180/55ZR18 74W
VRSCR	Front	19 in.	D207 F120/70ZR19 60W
	Rear	18 in.	D207 180/55ZR18 74W

Tire Pressures: 2006 VRSC Models

MODEL	LOAD	TIRE PRESSURE (COLD)			
		FRONT		REAR	
		PSI	kPa	PSI	kPa
VRSCA	solo rider	36	248	38	262
	rider and passenger	36	248	40	276
VRSCD	solo rider	36	248	38	262
	rider and passenger	36	248	40	276
VRSCR	solo rider	36	248	38	262
	rider and passenger	36	248	40	276
All 2006 models use Dunlop radial tires only.					

Bulb Chart: 2006 VRSC Models

LAMP	DESCRIPTION (ALL LAMPS 12 VOLT)	BULBS REQUIRED	CURRENT DRAW (AMPERAGE)	H-D PART NUMBER
Headlamp VRSCA/D/R	low beam	1	4.30	68881-01
	high beam	1	5.10	67717-01
Headlamp VRSCA/D/R international	low beam	1	4.30	68881-01
	high beam	1	5.10	67717-01
Position lamp international	position lamp	1	0.36	53436-97
Tail and stop lamp	tail lamp	1	0.59	68168-89A
	stop lamp	1	2.25	68168-89A
	license plate illumination	2	0.33	68193-95
	tail lamp international	1	0.42	68169-90A
	stop lamp international	1	1.75	68169-90A
	license plate illumination international	2	0.37	53436-97
Turn signal lamp	front/running	2	2.25/0.59	68168-89
	rear	2	2.25	68572-64B
	front/running international	2	1.75	68163-84
	rear international	2	1.75	68163-84
Instrument panel	Speedometer, tachometer and odometer are illuminated with non-serviceable LED assemblies.			

Dimensions: 2006 VRSC Models

ITEM	VRSCA		VRSCD		VRSCR	
	IN.	MM	IN.	MM	IN.	MM
Wheelbase	67.5	1714.5	66.92	1699.72	66.8	1697.0
Overall length	93.6	2377.4	93.03	2363.0	93.7	2380.0
Overall width	36.0	914.9	36.4	924.8	32.4	823.0
Overall height	48.9	1240.8	43.5	1105.9	48.7	1237.5
Road clearance	5.0	127.0	5.0	127	6.7	170.0
Saddle height	26.0	660.4	26.0	660.4	30.0	762.0

NOTE:

Gross Vehicle Weight Rating GVWR (maximum allowable loaded vehicle weight) and corresponding Gross Axle Weight Ratings (GAWR) are given on a label located on the left frame tube above the front engine cylinder.

Tire Data: VRSC Models

⚠WARNING

Match tires, tubes, air valves and caps to the correct wheel rim. Contact a Harley-Davidson dealer. Mismatching can result in damage to the tire bead, allow tire slippage on the rim or cause tire failure, which could result in death or serious injury. (00023a)

⚠WARNING

Use only Harley-Davidson approved tires. See a Harley-Davidson dealer. Using non-approved tires can adversely affect stability, which could result in death or serious injury. (00024a)

Tubeless tires are used on all Harley-Davidson cast and disc wheels.

Tire sizes are molded on the tire sidewall. Inner tube sizes are printed on the tube.

⚠WARNING

Harley-Davidson front and rear tires are not the same. Interchanging front and rear tires can cause tire failure, which could result in death or serious injury. (00026a)

⚠WARNING

Do not inflate tire beyond maximum pressure as specified on sidewall. Over inflated tires can blow out, which could result in death or serious injury. (00027a)

⚠WARNING

Harley-Davidson tires are equipped with wear bars that run horizontally across the tread. When wear bars become visible and only 1/32 in. (0.8 mm) tread depth remains, replace tire immediately. Using a worn tire can adversely affect stability and handling, which could result in death or serious injury. Use only Dunlop Harley-Davidson replacement tires. (00090a)

See Specifications: 2006 VRSC Models for tire pressures and sizes.

Catalytic Converters

International motorcycles are equipped with catalytic converters.

CAUTION

Do not operate catalytic converter-equipped vehicle with engine misfire or a non-firing cylinder. If you operate the vehicle under these conditions, the exhaust will become abnormally hot, which can cause vehicle damage, including emission control loss. (00149a)

Gasoline Blends

Your motorcycle was designed to get the best performance and efficiency using unleaded gasoline. Most gasoline is blended with alcohol and/or ether to create oxygenated blends. The type and amount of alcohol or ether added to the fuel is important.

CAUTION

Do not use gasoline that contains methanol. Doing so can result in fuel system component failure, engine damage and/or equipment malfunction. (00148a)

- Gasoline containing METHYL TERTIARY BUTYL ETHER (MTBE): Gasoline/MTBE blends are a mixture of gasoline and as much as 15% MTBE. Gasoline/MTBE blends can be used in your motorcycle.
- ETHANOL is a mixture of 10% ethanol (Grain alcohol) and 90% unleaded gasoline. Gasoline/ethanol blends can be used in your motorcycle if the ethanol content does **not** exceed 10%.
- REFORMULATED OR OXYGENATED GASOLINES (RFG): Reformulated gasoline is a term used to describe gasoline blends that are specifically designed to burn cleaner than other types of gasoline, leaving fewer tailpipe emissions. They are also formulated to evaporate less when you are filling your tank. Reformulated gasolines use additives to oxygenate the gas. Your motorcycle will run normally using this type of gas and Harley-Davidson recommends you use it when possible, as an aid to cleaner air in our environment.

You may find that some gasoline blends adversely affect the starting, driveability or fuel efficiency of your motorcycle. If you experience one or more of these problems, it is recommended you operate your motorcycle on straight unleaded gasoline.

Fuel

Refer to Octane Ratings. Always use a good quality unleaded gasoline. Octane ratings are usually found on the pump.

⚠WARNING

Avoid spills. Slowly remove filler cap. Do not fill above

bottom of filler neck insert, leaving air space for fuel expansion. Secure filler cap after refueling. Gasoline is extremely flammable and highly explosive, which could result in death or serious injury. (00028a)

⚠WARNING

Use care when refueling. Pressurized air in fuel tank can force gasoline to escape through filler tube. Gasoline is extremely flammable and highly explosive, which could result in death or serious injury. (00029a)

Modern service station pumps dispense a high flow of gasoline into a motorcycle fuel tank making air entrapment and pressurization a possibility.

Octane Ratings

SPECIFICATION	RATING
Pump Octane (R+M)/2	91 (95 RON)

Controls and Indicators

General: Controls and Indicators

⚠WARNING

Read the CONTROLS AND INDICATORS section before riding your motorcycle. Failure to understand the operation of the motorcycle could result in death or serious injury. (00043a)

Some features explained are unique to certain models. These features may be available as accessories for your Harley-Davidson motorcycle. See a Harley-Davidson dealer for a complete list of accessories that will fit your specific motorcycle.

Refer to the side view photographs in the front of the manual to locate the items discussed in this section. See 2006 VRSC Models.

Ignition Switch: VRSC Models

⚠WARNING

The automatic-on headlamp feature provides increased visibility of the rider to other motorists. Be sure headlamp is on at all times. Poor visibility of rider to other motorists can result in death or serious injury. (00030b)

See the YOUR OWNER'S MANUAL section at the beginning of this manual. Be sure to record all

your key numbers in the space provided at the front of this book.

The ignition switch controls electrical functions of the motorcycle.

CAUTION

Protect your vehicle against theft. After parking your motorcycle, lock the steering head and remove ignition key from switch. Failure to lock your motorcycle may result in theft and/or equipment damage. (00151a)

⚠WARNING

Do not operate vehicle with forks locked. Locking the forks restricts the vehicle's turning ability, which could result in death or serious injury. (00035a)

CAUTION

Do not lubricate barrel locks with petroleum based lubricants or graphite. Inoperative locks may result. (00152a)

CAUTION

Turn the ignition switch to the LOCK position and remove the key before locking the motorcycle. Leaving the key in the ACC position will keep the instrument lights on and result in a discharged battery. (00156a)

To review the functions of each switch position, refer to Ignition Switch: 2006 VRSC Models.

1. See Ignition/Seat Release Switch: VRSCA/D Models or Ignition Switch: VRSCR Model. To remove the key from the ignition turn it to the OFF position.
2. Pull the key outward.
3. Always turn switch to OFF position and remove key after operation and when leaving bike parked.

NOTES:

- *ACC-Accessories and hazard warning flasher can be turned on. Instrument lamps are on. Brake lamp and horn can be activated. Key may be removed.*
- *The lamps operate when the switch is in the IGN position, as required by law in some localities.*
- *Harley-Davidson recommends removing key from ignition/fork lock before operating motorcycle. If you do not remove key, it can fall out during operation.*
- *The ignition key also fits the front fork lock.*

Ignition Switch: 2006 VRSC Models

MODEL	SWITCH POSITION	REMOVE KEY	FUNCTIONS
VRSCR	OFF	Yes	Turns off ignition, lamps and accessories (disconnects battery voltage from IGN and ACC terminals).
	ACC	Yes	Turns on accessories. Hazard warning flashers can be operated. Instrument lamps are on. Brake lamp and horn can be activated (connects battery voltage to ACC terminal). NOTE: When switching to the ACC position, a startup diagnostic performs a systems check. The instrument background lighting illuminates, gauge needles sweep their full range of motion and the battery, security, coolant temperature and check engine indicator lamps illuminate.
	IGN	Yes	Turns on ignition, lamps and accessories.
VRSCA/D	FUEL	No	Unlocks seat latch. Seat is hinged and can be lifted from the right side allowing access to fuel filler cap.
	LOCK	Yes	Locks seat latch and switch.
	OFF	Yes	Turns off ignition, lamps and accessories (disconnects battery voltage from IGN and ACC terminals).
	ACC	Yes	Turns on accessories. Hazard warning flashers can be operated. Instrument lamps are on. Brake lamp and horn can be activated (connects battery voltage to ACC terminal). NOTE: When switching to the ACC position, a startup diagnostic performs a systems check. The instrument background lighting illuminates, gauge needles sweep their full range of motion and the battery, security, coolant temperature and check engine indicator lamps illuminate.
	IGN	Yes	Turns on ignition, lamps and accessories.

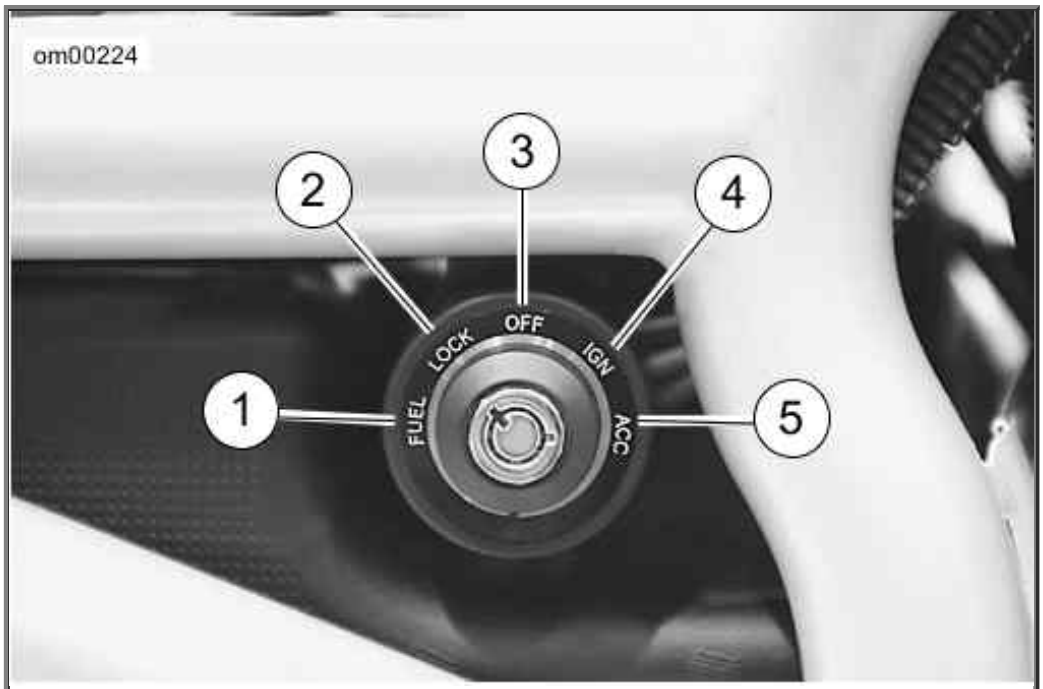

1. Fuel/seat release position
2. Lock position
3. Off position
4. Ignition position
5. Accessory position

Ignition/Seat Release Switch: VRSCA/D Models

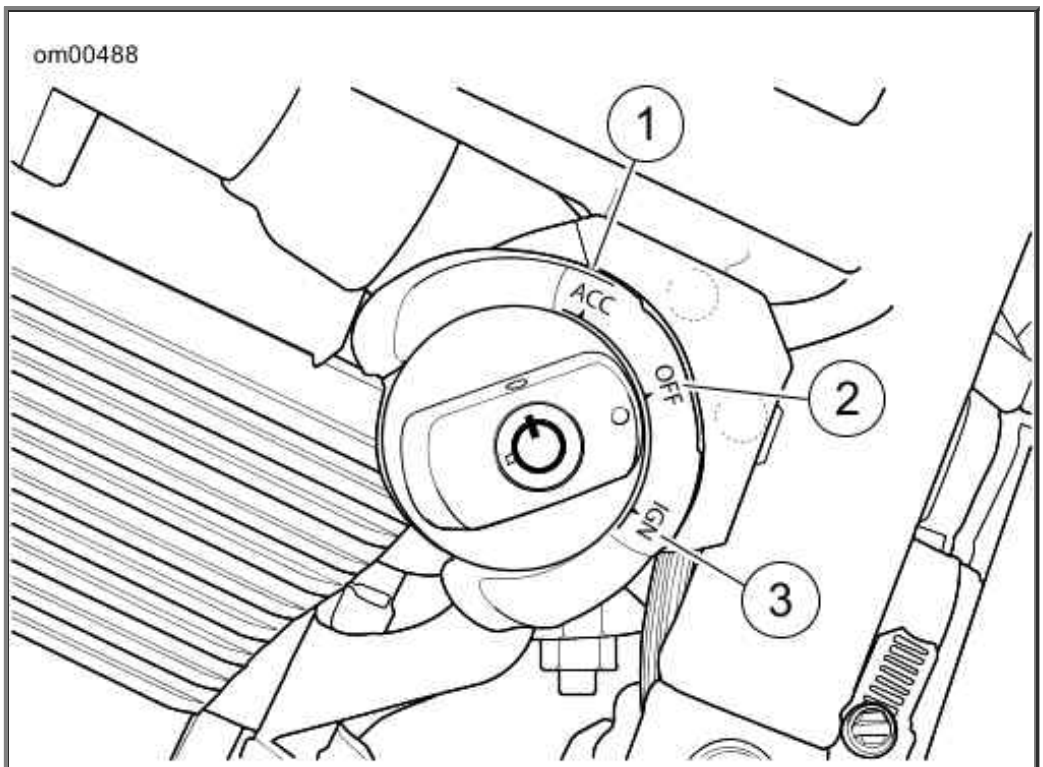

1. Accessory position
2. OFF position
3. Ignition position

Ignition Switch: VRSCR Model

Hand Controls: Basic Operation

Electric Starter Switch

NOTE:

Off/Run switch MUST be in RUN position to operate engine.

See Handlebar Controls: VRSC Models. The electric starter switch is located on the right handlebar control group. See Starting the Engine: EFI Models for detailed operation procedures.

1. Put the engine off/run switch in the RUN position and the transmission in neutral. Neutral (green) indicator lamp should be illuminated.

2. See Ignition/Seat Release Switch: VRSCA/D Models. Turn ignition/headlamp key switch to ON and push the START switch to operate starter motor.

Engine OFF/RUN Switch

See Handlebar Controls: VRSC Models. The engine off/run switch (7) turns the ignition power ON or OFF. The engine off/run switch is located on the right handlebar control. Push the top portion of the engine off/run switch to turn off ignition power and shut the engine off. Push the bottom portion of the engine off/run switch to turn on ignition power.

NOTES:

- *The engine off/run switch must be in the ON position to start or operate the engine.*
- *The engine off/run switch should be used to shut the engine off.*

1. To shut the engine off, push the top of the off/run switch to the ignition OFF position.

2. See Ignition/Seat Release Switch: VRSCA/D Models. Turn the ignition key to the OFF position to turn the ignition power completely OFF.

Throttle Control Grip

See Handlebar Controls: VRSC Models. The throttle control grip (9) is located on the right handlebar control and is operated with the right hand.

To reduce rider fatigue on long trips, a spring loaded throttle friction adjustment screw (10) is located at the bottom of the throttle grip clamp on non-cruise equipped models.

1. Slowly turn throttle control grip clockwise (toward the front of the bike) to close the throttle (decelerate).

2. Slowly turn throttle control grip counterclockwise (toward rear of bike) to open the throttle (accelerate).

⚠WARNING

Do not tighten throttle friction adjustment screw to the point where the engine will not return to idle automatically. Over-tightening can lead to loss of vehicle control, which could result in death or serious injury. (00031b)

3. Unscrew the throttle friction adjustment screw so the throttle returns to the idle position when the hand is removed from the grip.

4. Screw the throttle adjustment screw in to increase friction on grip. This provides a damping effect on throttle motion.

NOTE:

The throttle friction adjustment screw should not be used under normal stop and go operating conditions.

Clutch Hand Lever

⚠WARNING

Do not position fingers between hand control lever and handlebar grip. Improper hand positioning can impair control lever operation and cause loss of vehicle control, which could result in death or serious injury. (00032a)

The clutch hand lever (1) is located on the left handlebar and is operated with the fingers of the left hand.

1. Slowly pull clutch hand lever in against handlebar grip to fully disengage clutch.

2. Shift to first gear using the gear shifter lever. See Shifting Gears.

3. Slowly release the clutch hand lever to engage clutch.

Horn Switch

The horn is operated by pushing on the horn switch (2) located on the left handlebar control group.

Headlamp Dimmer Switch

The headlamp dimmer switch (3) is located on the left handlebar. The switch has two positions to activate the headlamps high or low beams.

- Press the top of the headlamp dimmer beam switch to activate the high beam.
- Press the bottom of the headlamp dimmer switch to return to the low beam.

See Indicator Lamps: VRSCR Model. The (blue) high beam indicator lamp will illuminate when the high beam is on.

Turn Signal Switches

Each handlebar control group contains a turn signal switch.

- The right turn signal switch (11) operates the right front and right rear flashing lamps.
- The left turn signal switch (4) operates the left front and left rear flashing lamps.

NOTE:

Front turn signal lamps also function as running lamps.

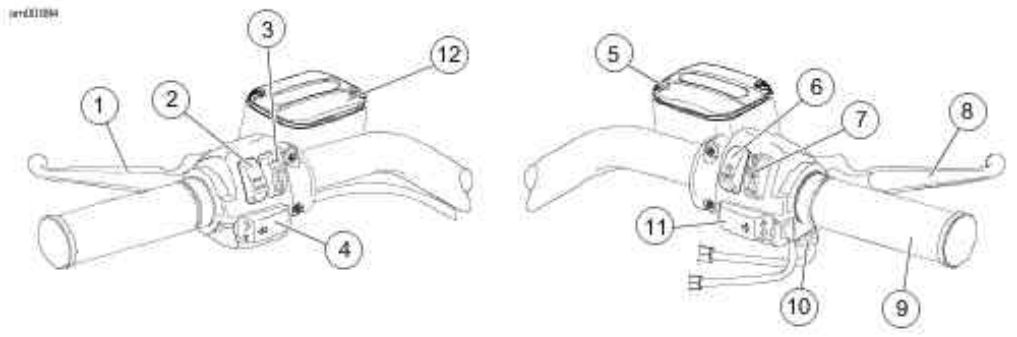

1. Clutch hand lever
2. Horn switch
3. Headlamp dimmer switch
4. Left turn signal switch
5. Front brake master cylinder reservoir
6. Electric starter switch
7. Engine off/run switch
8. Brake hand lever
9. Throttle control grip
10. Throttle friction adjusting screw
11. Right turn signal switch
12. Clutch master cylinder reservoir

Handlebar Controls: VRSC Models

Turn Signal Switch Operation

The turn signal switches are used by the turn signal module to control turn signal operation based on vehicle speed, vehicle acceleration and turn completion.

Momentarily depress the desired turn signal switch. The turn signal lamps will begin and continue flashing until they are manually or automatically cancelled. As long as the motorcycle is stationary, the signals will flash.

NOTES:

- *If you are signaling to turn in one direction and you depress the switch for the opposite turn signal, the first signal is cancelled and the opposite side begins flashing.*
- *If you want to stop the lamps from flashing, briefly depress the turn signal switch a second time. The turn signal lamps will stop flashing.*

Hazard Warning 4-Way Flasher

Use the following method to activate the four-way flashers.

1. With the ignition key ON and security system disarmed (models with security only), press the left and right turn signal switches at the same time.

2. Turn the ignition key OFF and arm the security system if present and desired. The four-way

flashers will continue for two hours.

3. To cancel four-way flashing, disarm the security system if necessary, turn the ignition key ON and press the left and right turn signal switches at the same time.

This system allows a stranded vehicle to be left in the four-way flashing mode and secured until help is found.

Indicator Lamps: VRSC Models

See Indicator Lamps: VRSCR Model. Ten indicator lamps are provided.

- The two green TURN indicator lamps flash when turn signals are activated; therefore, flashing indicates the chosen turn direction. When the 4-way hazard flashers are operating, both turn indicators flash simultaneously.
- The blue HIGH BEAM indicator lamp, when lit, signals high beam headlamp operation.
- The green NEUTRAL lamp, when lit, signals the transmission is in neutral gear.
- The red OIL PRESSURE indicator lamp, when lit, signals that oil is not circulating through the engine.
- The red ENGINE COOLANT TEMPERATURE indicator lamp, when lit, signals the coolant temperature has exceeded 243° F (117° C).
- The red ENGINE DIAGNOSTIC indicator lamp, when lit, signals that the vehicle's computer has detected an engine malfunction.
- The red ALTERNATOR indicator lamp, when lit, signals there is a malfunction in the charging circuit and the battery is not being properly charged.
- The red SECURITY STATUS indicator lamp indicates the status of the vehicle's security system. It is normal for this to light with or without a security system.
- The yellow LOW FUEL indicator lamp, when lit, signals the fuel tank is almost empty.

NOTES:

- *The OIL PRESSURE indicator lamp will glow when the ignition is turned on prior to starting the engine. With the engine running, the lamp should be off when engine speed is above idle.*
- *To learn more about the SECURITY STATUS indicator lamp, see the H-D Factory Security Section later in this manual.*

Several other circumstances that could cause the red oil pressure indicator lamp to illuminate include:

- An insufficient or diluted oil supply causing the oil pressure indicator lamp to remain lit at speeds above idling.
- An oil feed clogged with ice and sludge in freezing weather, preventing oil circulation.
- A grounded oil signal switch wire.
- A faulty oil signal switch.
- A damaged or improperly installed check valve.
- Trouble with the oil pump.

CAUTION

If the oil pressure indicator lamp remains lit, always check the oil supply first. If the oil supply is normal and the lamp is still lit, stop the engine at once and do not ride further until the trouble is located and the necessary repairs are

made. Failure to do so may result in engine damage. (00157a)

Several other circumstances that could cause the red engine coolant temperature indicator lamp to illuminate include:

- Cooling fan malfunction.
- Low coolant level.
- Thermostat malfunction.
- Temperature gauge malfunction.
- Blocked coolant passages.
- Radiator cap malfunction.
- Coolant malfunction.

CAUTION

If the engine coolant temperature indicator lamp remains lit, always check the coolant level. If the coolant level is normal and the lamp is still lit, stop the engine at once and do not ride further until the trouble is located and the necessary repairs are made. Failure to do so may result in engine damage. (00158a)

⚠WARNING

Do not remove radiator filler cap when engine is hot. The cooling system is under pressure and hot coolant and steam can escape, which could cause severe burns. Allow engine to cool before servicing the cooling system. (00091a)

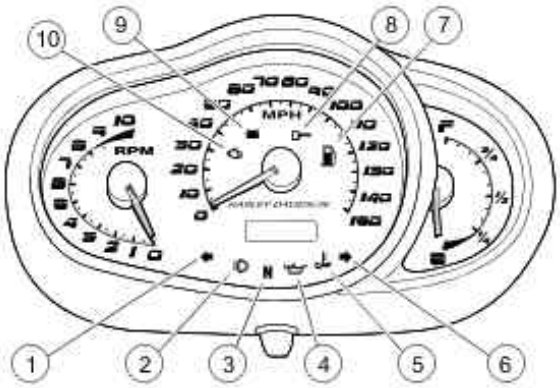

1. Left turn
2. High beam
3. Neutral
4. Oil
5. Engine coolant
6. Right turn
7. Low fuel
8. Security system
9. Alternator
10. Engine diagnostic

Indicator Lamps: VRSCR Model

Instruments: VRSC Models

Speedometer

WARNING

Travel at speeds appropriate for road and conditions and never travel faster than posted speed limit. Excessive speed can cause loss of vehicle control, which could result in death or serious injury. (00008a)

See Instrument Cluster: VRSCR Model. The speedometer registers miles per hour (kilometers per hour for international) of forward speed.

CAUTION

Never attempt to tamper with or alter the vehicle odometer. This is illegal. Tampering with or altering a vehicle odometer may cause equipment damage. (00160a)

Tachometer

The tachometer registers the engine speed in revolutions per minute (RPM).

CAUTION

See OPERATING RECOMMENDATIONS section. Do not operate the engine above maximum safe RPM as shown under OPERATION (red zone on tachometer). Lower the RPM by upshifting to a higher gear or reducing the amount of throttle. Failure to lower RPM may cause equipment damage. (00159a)

Trip Odometer

See Instrument Cluster: VRSCR Model. Use the trip-odometer A or trip-odometer B to register number of miles/kilometers traveled on a trip or between refueling.

Odometer will wake up when bike is OFF while the function switch is pressed (No need to turn the bike on to check the odometer reading).

Odometer/Trip Odometer/Fuel Range Functions

See Instrument Cluster: VRSCR Model. The speedometer has a single display window for the odometer, trip odometer and fuel range displays. The odometer registers the number of miles (kilometers) the vehicle has traveled. Use the trip odometer to register the number of miles (kilometers) traveled on a trip or between refueling. The fuel range display shows the approximate mileage available with the amount of fuel currently in the fuel tank.

1. Press the rubber covered function switch to change the display window on the speedometer face to either odometer or trip-odometer.

2. To reset the trip-odometer to zero, press button to reset speedometer display to the ODOMETER mode and hold the button in for approximately 2-3 seconds.

3. See Instrument Cluster: VRSCR Model. Press the odometer reset switch to change the display window on the speedometer face to odometer, trip-odometer, or fuel range. The fuel range function can be identified by the letter 'r' on the left side of the display and the calculated number of miles (kilometers) left. When the motorcycle is very low on fuel, the fuel range function displays "r lo".

The speedometer will switch to the trip-odometer mode and reset the display to zero. The trip-odometer is displayed and reset to zero.

Tip Indicator Lamp

⚠WARNING

If tip occurs, check all controls for proper operation. Restricted control movement can adversely affect the performance of the brakes, clutch or ability to shift, which could result in loss of vehicle control and death or serious injury. (00350a)

Should motorcycle be tipped over, the word "tip" will appear in the odometer window. To reset, cycle ignition/headlamp key switch ON-OFF-ON.

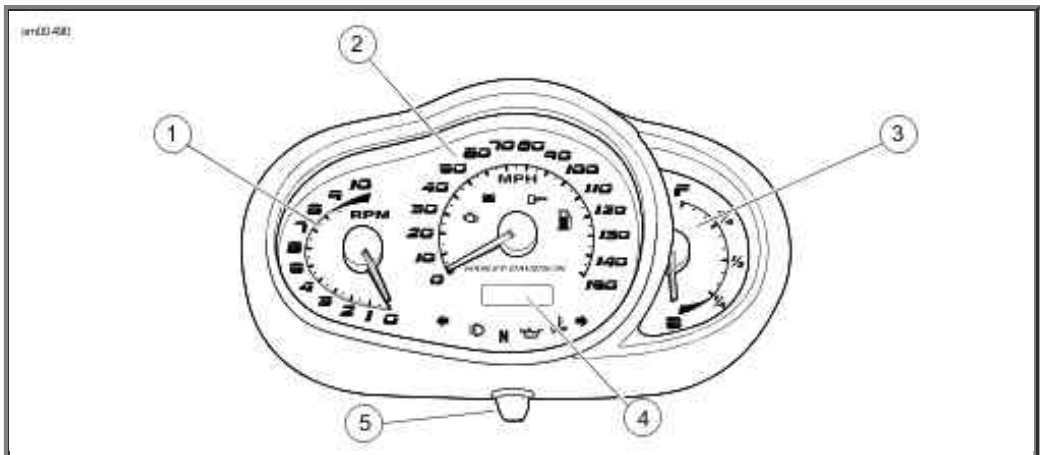

1. Tachometer
2. Speedometer
3. Fuel gauge
4. Odometer/trip-odometer/fuel range display
5. Odometer reset switch

Instrument Cluster: VRSCR Model

Sequential Port Fuel Injection

Check Engine Lamp

See Check Engine and Low Fuel Lamp: VRSCR Model. The engine check lamp is located inside the instrument cluster. Its purpose is to indicate whether or not the engine/engine management system is operating normally. The engine lamp color is red.

The engine lamp normally comes on when the bike's ignition is first turned on and remains on for approximately 4 seconds, as the engine management system runs a series of self-diagnostics.

If the engine lamp comes on at any other time, see a Harley-Davidson dealer.

Low Fuel Lamp

See Check Engine and Low Fuel Lamp: VRSCR Model. There is a low fuel warning lamp within the instrument cluster. The low fuel lamp lights up to indicate that there is approximately 1 gallon (3.79 liters) of gasoline left in the tank. The low fuel lamp color is amber.

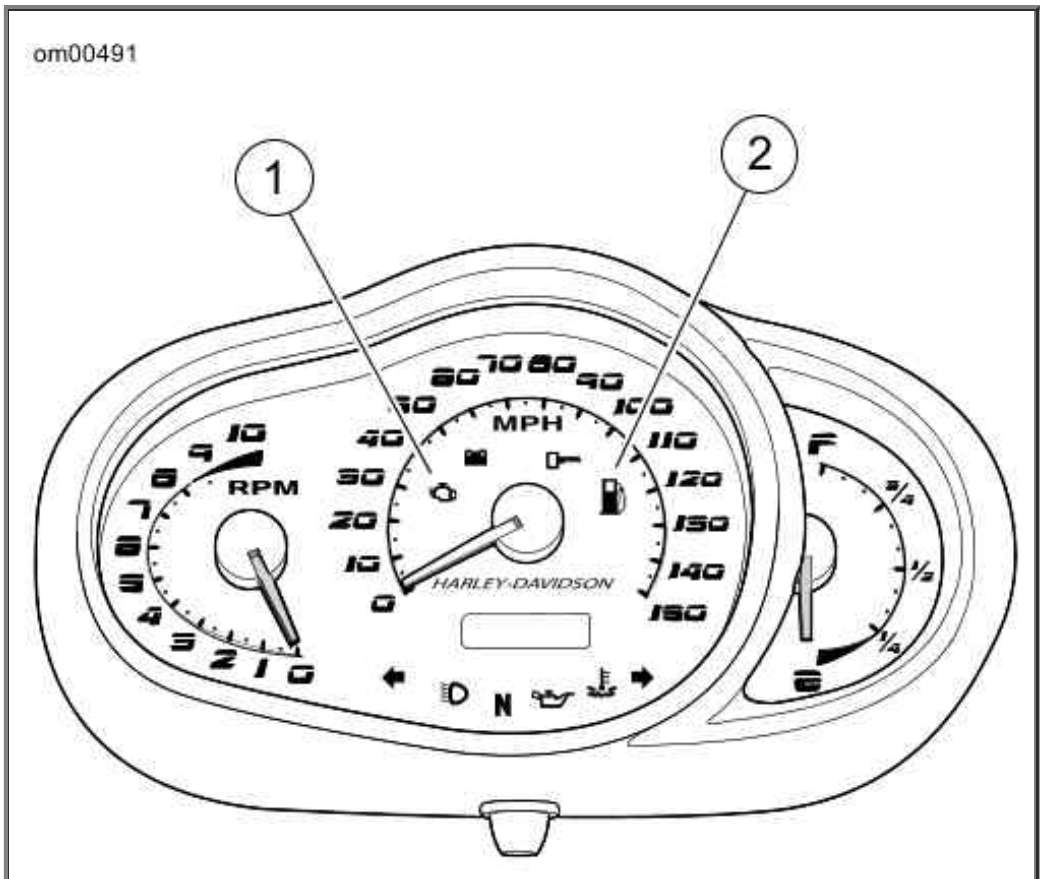

1. Check engine lamp
2. Low fuel lamp

Check Engine and Low Fuel Lamp: VRSCR Model

Gear Shift Lever

CAUTION

The clutch must be fully disengaged before attempting a gear shift. Failure to fully disengage the clutch can result in equipment damage. (00182a)

The gear shift lever is located on the left side of the motorcycle and is operated with the left foot.

1. Push the gear shift lever all the way down (full stroke) to shift the transmission to the next lower gear.

2. Lift the gear shift lever all the way up (full stroke) to shift the transmission to the next higher gear.

   NOTES:
   - *Release the gear shift lever after each gear change.*
   - *The lever must return to its central position before another gear change can be made.*

See Gear Shift Lever (Downshift): VRSC Models. First gear is the last gear position that can be found by pushing the gear shift lever full stroke downward.

Neutral is located between first and second gear. The green neutral indicator lamp on the dash will illuminate when the transmission is in neutral.

1. To shift from first gear to neutral, lift the gear shift lever 1/2 of its full stroke.
2. To shift from second gear to neutral, push the gear shift lever downward 1/2 of its full stroke.

When the motorcycle is standing still and the engine is not running, shifting gears requires a different technique. Before shifting in this condition, move the motorcycle backward and forward with the clutch fully disengaged (clutch lever pulled in). While maintaining slight pressure on the shift lever, shift from one gear to another.

Even with the engine running and the motorcycle standing still, difficulty may be experienced in shifting gears. This difficulty occurs because transmission gears are not turning and shifting parts are not lined up to permit engagement.

CAUTION

When difficulty of shifting gears is experienced, do not under any circumstances, attempt to force the shift. The results of such abuse will be a damaged or broken shifter mechanism. (00161a)

See Shifting Gears for more information.

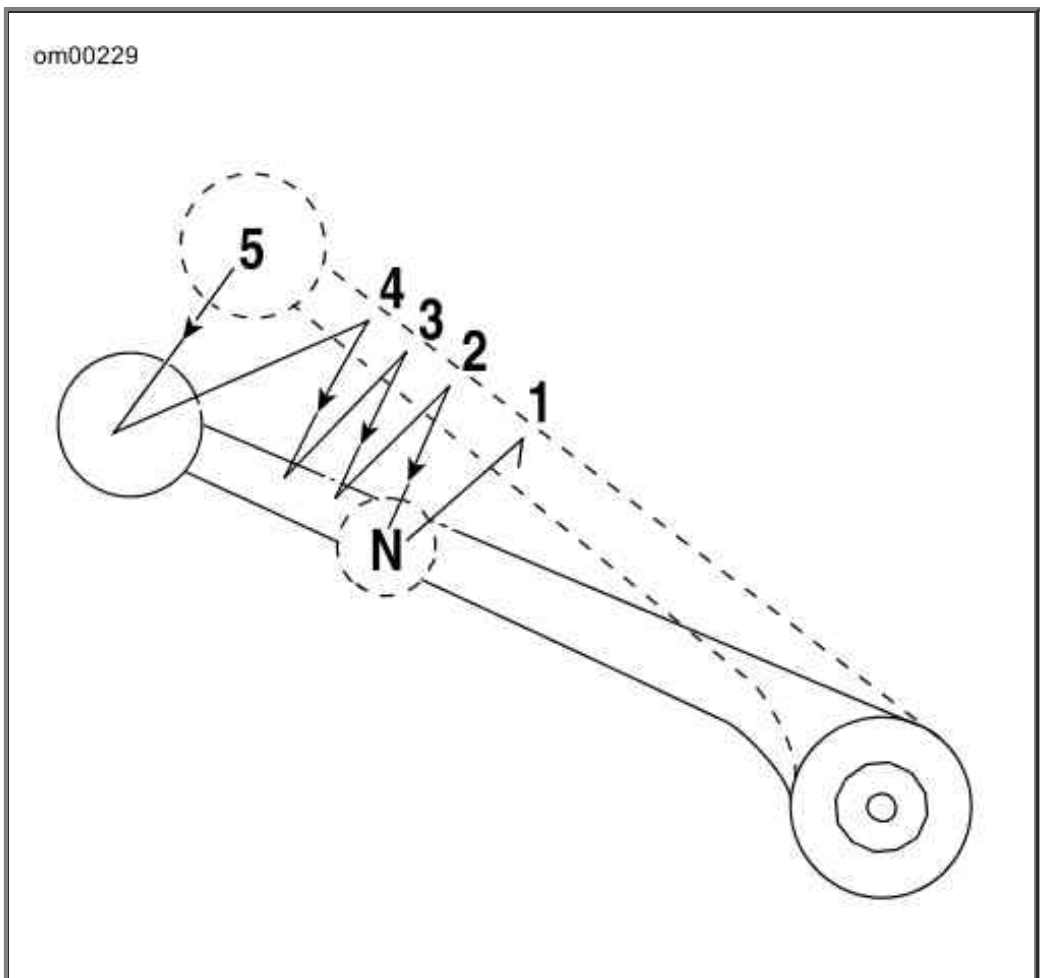

Gear Shift Lever (Downshift): VRSC Models

Brake System

⚠WARNING

Do not apply brake strongly enough to lock the wheel. A locked wheel will skid and can cause loss of vehicle control, which could result in death or serious injury. (00053a)

The rear brake pedal controls the rear wheel brake and is located on the motorcycle's right side. Operate the rear brake pedal with the right foot.

The front brake hand lever controls the front wheel brake and is located on the right handlebar. Operate the hand lever with the fingers of the right hand.

⚠WARNING

Do not position fingers between hand control lever and handlebar grip. Improper hand positioning can impair control lever operation and cause loss of vehicle control, which could result in death or serious injury. (00032a)

Brakes should be applied uniformly and evenly to prevent wheels from locking up. A balance between rear and front braking is generally best.

Jiffy Stand

⚠WARNING

Always park motorcycle on a level, firm surface. An unbalanced motorcycle can fall over, which could result in death or serious injury. (00039a)

The jiffy stand is located on the left side of the motorcycle and swings outward to support the motorcycle for parking.

⚠WARNING

The jiffy stand locks when placed in the full forward (down) position with vehicle weight on it. If the jiffy stand is not in the full forward (down) position with vehicle weight on it, the vehicle can fall over which could result in death or serious injury. (00006a)

⚠WARNING

Be sure jiffy stand is fully retracted before riding. If jiffy stand is not fully retracted, it can contact the road surface causing a loss of vehicle control, which could result in death or serious injury. (00007a)

Rear View Mirrors

⚠WARNING

Objects in mirrors are closer than they appear. Use caution when judging distance of objects in mirrors. Failure to judge correct distances could result in death or serious injury. (00033a)

Your vehicle is equipped with two convex rear view mirrors.

This type of mirror is designed to give a much wider view to the rear than a flat mirror. However, cars and other objects seen in this type of mirror will look smaller and farther away than they actually are.

- Use caution when judging the size or relative distance of objects seen in rear view mirrors.
- Always adjust the rear view mirrors to clearly reflect the area behind the motorcycle before riding.

NOTE:

Adjust mirrors so you can see a small portion of your shoulders in each mirror. This will help you establish the relative distance of vehicles to the rear of your motorcycle.

Fuel Filler Cap: VRSC Models

The fuel filler cap is located under the seat. To lift up the seat, see Seat: VRSCR Model or Seat: VRSCA/D Models.

See Fuel Filler Cap: VRSCR Model. To open, turn the fuel filler cap counterclockwise and lift up. To close, turn the fuel filler cap clockwise until it clicks. The ratchet action of the cap prevents overtightening.

NOTE:

The fuel filler cap turns approximately 3/4 turn before it begins unscrewing.

See SAFE OPERATING RULES section and review safety procedures.

CAUTION

Do not spill fuel onto the motorcycle while refueling. Immediately wipe up fuel spills on your motorcycle. Fuel can cause damage to cosmetic surfaces. (00147b)

CAUTION

Use only unleaded fuel in catalytic converter-equipped motorcycles. Using leaded fuel will damage the emission control system. (00150b)

⚠WARNING

Do not store motorcycle with gasoline in tank within the home or garage where open flames, pilot lights, sparks or

electric motors are present. Gasoline is extremely flammable and highly explosive, which could result in death or serious injury. (00003a)

⚠WARNING

Avoid spills. Slowly remove filler cap. Do not fill above bottom of filler neck insert, leaving air space for fuel expansion. Secure filler cap after refueling. Gasoline is extremely flammable and highly explosive, which could result in death or serious injury. (00028a)

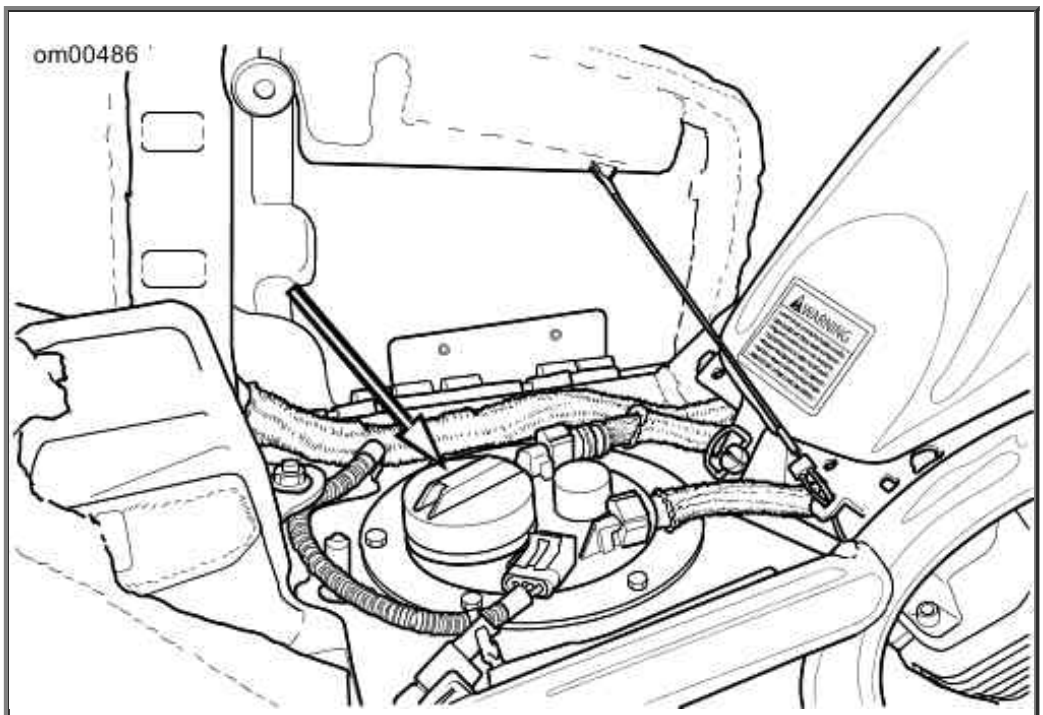

Fuel Filler Cap: VRSCR Model

Fork Lock: VRSC Models

CAUTION

Protect your vehicle against theft. After parking your motorcycle, lock the steering head and remove ignition key from switch. Failure to lock your motorcycle may result in theft and/or equipment damage. (00151a)

See Fork Lock: VRSCR Model. VRSC models have the fork lock incorporated in the steering head on the right hand side.

⚠WARNING

Do not operate vehicle with forks locked. Locking the forks restricts the vehicle's turning ability, which could result in death or serious injury. (00035a)

Using the fork lock immediately after parking your motorcycle will discourage unauthorized use or

theft when parking your motorcycle.

1. Turn the fork to the full left position.
2. Insert the ignition key into the fork lock.
3. Push down on the fork lock switch and turn to the full clockwise position.
4. Remove the ignition key.

Fork Lock: VRSCR Model

Rear Shock Absorbers: VRSC Models

General

See Adjusting Rear Shock: VRSC Models. The rear shock absorber spring preload can be adjusted for the weight the motorcycle is to carry and has five preload graduations. Notice the adjustment settings as you turn the collar.

Adjustment

⚠WARNING

Be sure both shock absorbers are adjusted to same preload position. Improper adjustment can adversely affect stability and handling, which could result in death or

serious injury. (00036a)

The average weight solo rider might use the extended spring preload position (adjustment setting 1 or 2).

1. Place the shock absorber adjustment tool around the lower collar of the shock absorber.
2. Turn the collar clockwise (toward higher numbers) to increase the preload or pressure.

Use the adjustment setting numbers as a reference for equal adjustment of shock absorbers on both the right and left side of the motorcycle. A heavy solo rider might require additional preload or pressure (adjustment setting 3).

CAUTION

Do not turn the shock absorber adjustment collar counterclockwise beyond adjustment setting 1. Doing so may result in equipment damage. (00166a)

Adding a passenger may require maximum preload (adjustment setting 5).

Turn the collar counterclockwise to decrease the preload or pressure.

See Adjusting Rear Shock: VRSC Models. To adjust the rear shock absorber spring preload, turn the spring adjusting cam to the desired position with a spanner wrench. When returning to off-cam position, cams should be backed off in opposite direction. A SPANNER WRENCH 94700-52C is available from your Harley-Davidson dealer.

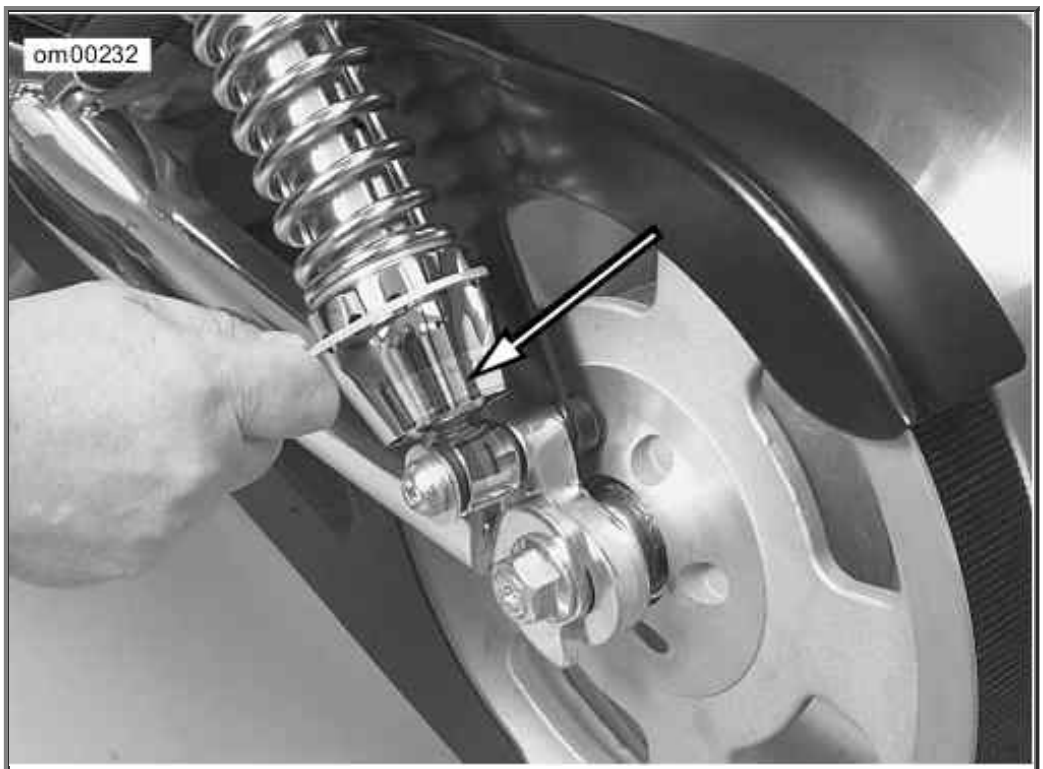

Adjusting Rear Shock: VRSC Models

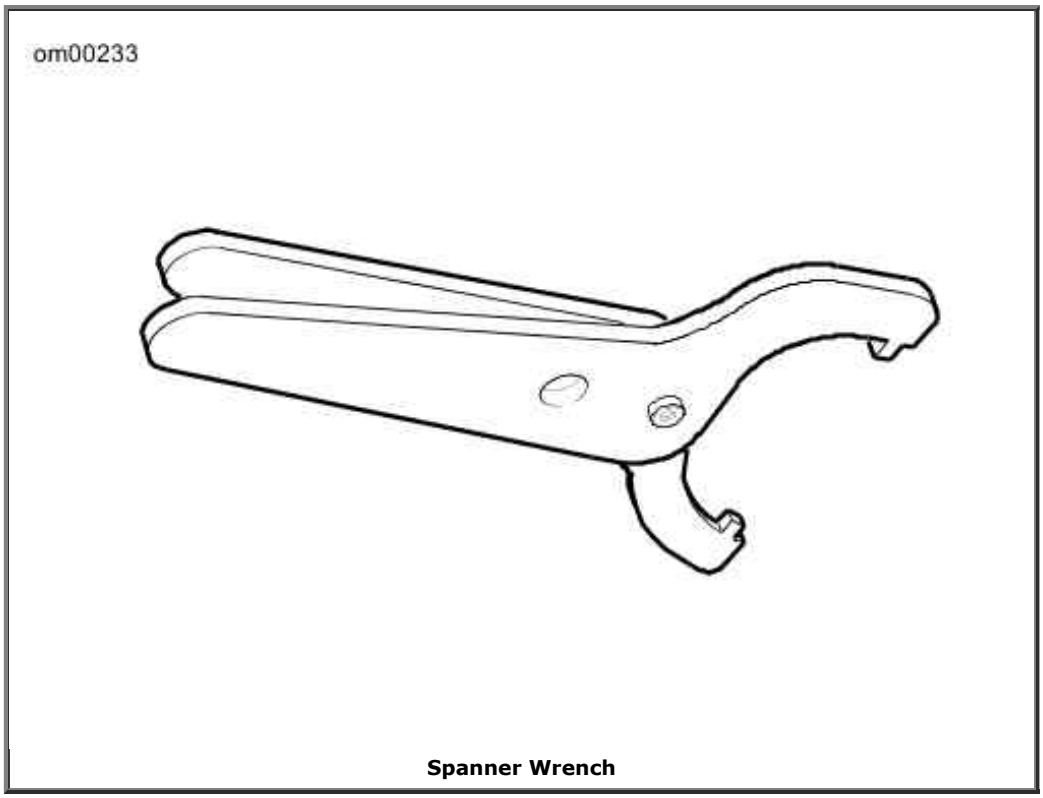

Spanner Wrench

H-D Factory Security System

Basic Security System Operation

The security system provides security and immobilization functions. The security system will disable the starter and the ignition or EFI system. Additional functions include the ability to flash all four turn signals and sound a siren (if purchased as an option) if a theft attempt is detected.

Conditions that activate the security alarm when the system is armed include:

- Detecting vehicle movement.
- Detecting tampering of the ignition switch circuit.
- Detecting tampering of the security lamp circuit.
- Detecting that a battery disconnect has occurred while armed. (Activates siren only if P&A siren is installed.)

Security System Options

The following configurations are available on the security system unit:

- Alarm sensitivity.
- Auto-arming feature.
- Storage mode.

Factory settings for the security system include:

- Medium motion alarm sensitivity.
- Key fob arming mode.
- Storage mode set to 10 days.

FCC Regulations

This device complies with Part 15 of the FCC Rules and with RSS-210 of Industry Canada rules.

Operation is subject to the following conditions:

- This device may not cause harmful interference.
- This device must accept any interference received, including interference that may cause undesired operation.

Arming The System

There are two methods to arm the security system:

- **Remote-arming:** See Key Fob. Owners may enable security alarm and immobilization functions with a remote, personally carried transmitter. This transmitter is referred to as a key fob within this document.
- **Auto-arming:** Arms the security system within 30 seconds after IGNITION switch is turned OFF. To enable auto-arming see Using Auto-arming below.

NOTES:

- *The vehicle cannot be armed with the engine running or the ignition ON.*
- *International vehicles are configured for auto-arming. This cannot be changed.*

Using Key Fob

See Key Fob. Hold down the key fob button until the system responds with two turn signal flashes and two chirps from optional siren. To assign a key fob to a motorcycle, refer to Key Fob Assignment.

Using Auto-arming

Auto-arming causes the security system to automatically arm itself (without the use of the key fob) within 30 seconds after the ignition key is turned OFF. During this period, the security lamp stays on solid to indicate auto-arming is starting up.

The vehicle may be moved during these 30 seconds without triggering the alarm. However, any motion after that period will trigger the security alarm. Upon expiration of the auto-arming period, the turn signals flash twice, the security lamp begins to flash and the siren (if installed) chirps twice.

To set the auto-arming selection, refer to Auto-arming Configuration.

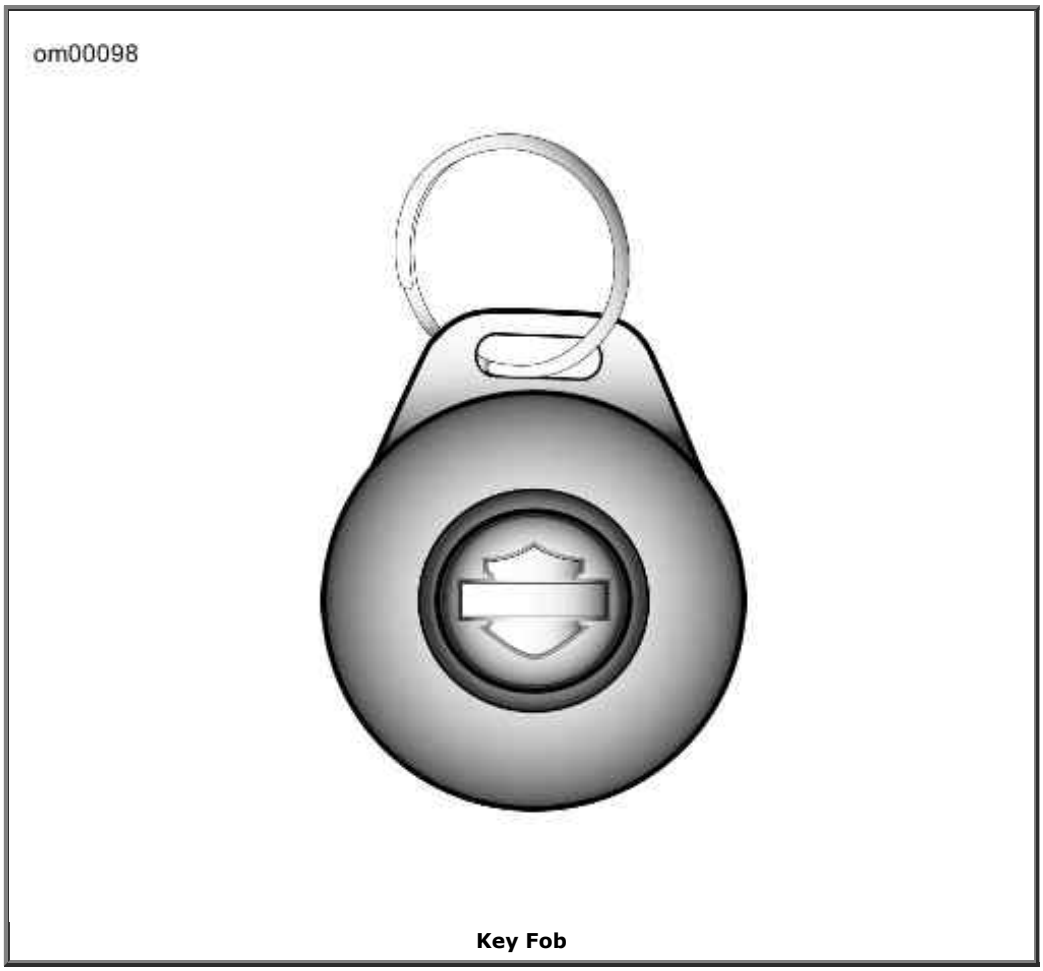

Key Fob

Disarming The System

There are two ways to disarm the system:

- **Remote disarming:** See Key Fob. Owners may disable security alarm and immobilization functions with a remote, personally carried transmitter. This transmitter is referred to as a key fob within this document.
- **Personal code:** If a key fob is not available, the security system allows the rider to disable the security alarm and immobilization functions if the rider knows the previously entered personal code.

NOTE:

Do not forget to enter a personal code for security system vehicles. If a code is not assigned and the key fob is lost or damaged while the vehicle is armed, the security system module must be replaced. Refer to Programming a Personal Code for personal code setup.

Using Key Fob

See Key Fob. Quickly press the key fob button twice. The system will respond with one turn signal flash.

NOTES:

- ***Disarming function may require practice.*** *The key fob button must be pressed twice within 1.5 seconds to send the disarm command. The action is very similar to double-clicking a computer mouse. Light quick taps work best; very hard or very slow taps are less likely to work.*

- *If the system is remotely disarmed (with the key fob) but the ignition key is not turned ON within 30 seconds, the system will rearm itself when auto-arming is enabled.*

Using Personal Code

Enter the five digit personal code you have chosen using the left and right turn signal switches. For complete procedure refer to Entering a Personal Code to Disarm Security System. To create a personal code, refer to Programming a Personal Code.

NOTE:

If you make an error while disarming the security system using the personal code, the alarm will activate for 30 seconds after the last digit is entered. After a failed attempt, the security lamp will flash once every second for 10 minutes. During this time, the vehicle will not accept any attempt to enter a personal code.

Entering a Personal Code to Disarm Security System

STEP NO.	ACTION	WAIT FOR CONFIRMATION	NOTES
NOTE: The left turn signal switch is used for code number entry and the right turn signal is used as the "enter" key.			
1	Know your 5 digit personal code		
2	Turn **IGN** key to **ACC**		
3	Hold **both** turn switches in until confirmation	Security lamp blinks at fast rate	
4	Enter first digit of code (**a**) by pressing **left** turn switch **a times**		
5	Press **right** turn switch **1 time**		Serves as enter key for first digit
6	Enter second digit of code (**b**) by pressing **left** turn switch **b times**		
7	Press **right** turn switch **1 time**		Serves as enter key for second digit
8	Enter third digit of code (**c**) by pressing **left** turn switch **c times**		
9	Press **right** turn switch **1 time**		Serves as enter key for third digit
10	Enter fourth digit of code (**d**) by pressing **left** turn switch **d times**		
11	Press **right** turn switch **1 time**		Serves as enter key for fourth digit
12	Enter fifth digit of code (**e**) by pressing **left** turn switch **e times**		
13	Press **right** turn switch **1 time**	Security lamp stops blinking	System is disarmed. You may use the vehicle or program another key fob.

Security Status Lamp

See Security System Icon. A lamp within the speedometer face tells the rider if the system is armed or disarmed.

Refer to Security Lamp Status for an explanation of the lamp's activity.

Security Lamp Status

SECURITY LAMP STATUS	MODE
Does not flash.	No security system (TSSM), security system not armed or low power mode active.
Flashes every second.	10 minute time-out after failed personal code entry attempt.
Flashes every 2 seconds.	Security system armed.
Flashes 3 times a second.	Personal code entry mode.
Stays ON solid with ignition key ON.	If solid for more than 8 seconds after key is ON, a current trouble code is present.

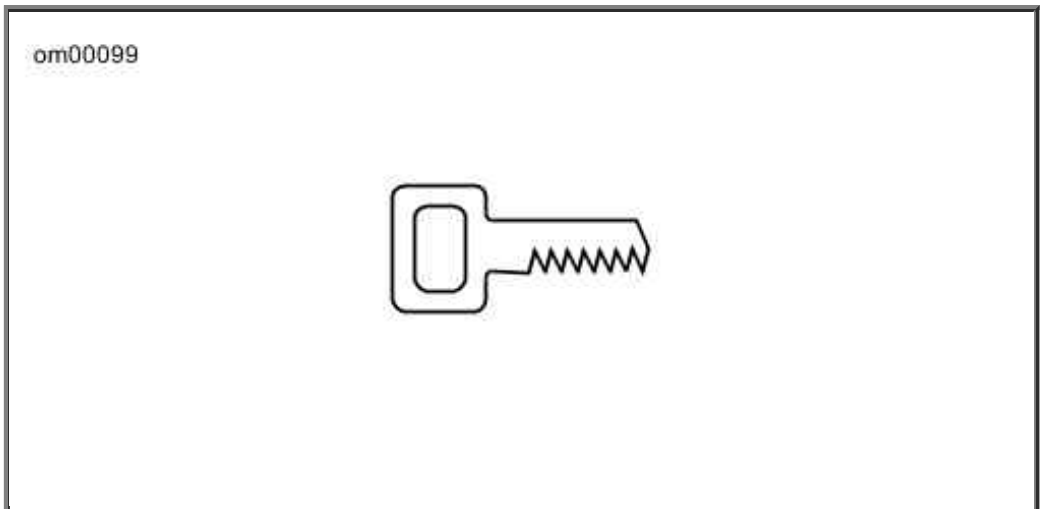

Security System Icon

Transport Mode

It is possible to arm the security system without enabling the motion detector for one ignition cycle. This allows the vehicle to be moved in an immobilized state for transport.

The transport mode is used for moving the vehicle or transporting on a trailer with the security system armed and without tripping the alarm. When the vehicle is in the transport mode, the security system does not respond to motion detection.

1. To exit the transport mode, use the key fob to disarm the vehicle.
2. To enter the transport mode, refer to Transport Mode.

NOTE:

Transport mode is especially useful when working on international vehicles. If it is not used, the alarm will activate under many typical service activities.

Transport Mode

STEP NO.	ACTION	WAIT FOR CONFIRMATION	NOTES
1	Turn **IGN** key **ON**		
2	Press and hold **key fob** button until confirmation is received	3 flashes turn signals & indicators	
3	Turn **IGN** key **OFF**		
4	Press and hold **key fob** button until confirmation is received	3 flashes turn signals & indicators	The vehicle can be moved without tripping the alarm

Security System Custom Setup

Key Fob Assignment

The key fob on security system motorcycles must be set so it will operate the alarm system on the vehicle. This assignment must be completed with no pauses greater than 10 seconds between steps. Turn the ignition OFF after both key fobs have been assigned. The programming mode will also exit after 60 seconds has elapsed without detecting any key fob sign up messages or turn signal activity.

Procedure

To assign a key fob to a motorcycle, refer to Key Fob Assignment.

Two key fobs may be assigned to the security system. The first successful attempt to program a key fob will disable all previously assigned key fobs. If a second key fob is to be programmed, it must be done in the same programming sequence as the initial key fob.

Key Fob Assignment

STEP NO.	ACTION	WAIT FOR CONFIRMATION	NOTES
1	Turn **IGN** key **ON**-OFF-**ON**-OFF-**ON**		
2	Press **left** turn switch **2 times** and release	1,2,3, or 4 flashes turn signals & indicators depending on vehicle configuration (See BATTERY DISCONNECTS AND CONFIGURING section)	1 flash - Worldwide TSM, no security system 2 flashes - North American/Domestic configuration TSSM 3 flashes - Netherlands configuration TSSM 4 flashes - international configuration TSSM
3	Press **right** turn switch **1 time** and release	1 flash turn signals & indicators	
4	Press **left** turn switch **1 time** and release	2 flashes turn signals & indicators	
5	Press and hold **key fob** button until confirmation is received	2 flashes turn signals & indicators	This may take 10-25 seconds
6	If you have two key fobs, press and hold button on second **key fob** until confirmation is received	2 flashes turn signals & indicators	Optional step
7	Turn **IGN** key OFF		

Personal Code

Creating Code for the First Time

The personal code consists of five digits entered using the left and right turn signal switches. Each digit can be any number from 1-9. The personal code is intended to be used to disarm the vehicle in case the key fob is not functioning.

Record your personal code on the card(s) provided in the rear of the Owner's Manual. Carry one for reference in your wallet when riding.

To set a personal code on a motorcycle with no code previously installed, refer to Programming a Personal Code. The procedure listed uses 3-1-3-1-3 as the sample personal code.

NOTE:

For better security, do not use 3-1-3-1-3 as a personal code. It is shown as an example only.

Decide what five digit code the owner would like to use. The code will be programmed using the

turn signal switches and key fob. Record your personal code on the card(s) provided in the rear of the Owner's Manual. Carry one for reference in your wallet when riding.

- When programming the personal code, the security lamp flashes to provide feedback when entering each digit.
- The number of security lamp flashes corresponds to the number currently selected for a given digit. Therefore, the lamp may flash 1-9 times depending on the number entered.
- Press the left turn switch one time to increment each digit of the code.
- Quickly press the key fob button twice to advance to the next digit of the code.

NOTE:

The programming mode exits upon turning the key switch to OFF or if no turn signal switch/key fob button activity occurs for 60 seconds. No data is saved for partial configuration attempts of a first time entry.

Modifying Existing Codes

If a code was previously entered, the lamp will flash the equivalent digit. Each additional press of the left turn switch will increment the digit.

- To advance from 5 to 6, press and release the left turn switch 1 time.
- To advance from 8 to 2, press and release the left turn switch 3 times (9-1-2).

Programming a Personal Code

STEP NO.	ACTION	WAIT FOR CONFIRMATION	NOTES
NOTE: For better security, do not use 3-1-3-1-3 as a personal code. It is shown as an example only.			
1	Set **RUN/OFF** switch to **OFF**		Verify that security lamp is **not** blinking (vehicle is disarmed)
2	Turn **IGN** key **ON**-OFF-**ON**-OFF-**ON**		
3	Press **left** turn switch **2 times** and release	1-4 flashes turn signals & indicators depending on vehicle configuration (See BATTERY DISCONNECTS AND CONFIGURING section)	1 flash - Worldwide TSSM, no security 2 flashes - North American/Domestic configuration security system 3 flashes - Netherlands configuration security system (Dealer configurable only) 4 flashes - international configuration security system
4	Quickly press **key fob** button **2 times** and release	1 flash turn signals & indicators	Vehicle is in personal code entry mode
5	Press **left** turn switch **1 time** and release	None if no code entered 1-9 flashes if code previously entered	A lack of confirmation flashes indicates no digit is entered
6	In this example, you will press and release three times If code previously entered, count flashes for number and then press and release **left** turn switch to advance through the digits	Security lamp flashes to indicate each digit selected Digit will display on odometer In this example, the lamp will flash 3 times	You've selected 3 as a number for the first digit
7	Quickly press **key fob** button **2 times** and release	2 flashes turn signals & indicators	You've confirmed 3 as a number for the first digit and have advanced to entering the second digit
8	Press **left** turn switch **1 time** and release	None if no code entered 1-9 flashes if code previously entered	A lack of confirmation flashes indicates no digit is entered
9	In this example, you will perform this step one time If code previously entered, count	Security lamp flashes to indicate each digit selected	You've selected 1 as a number for the second digit

	flashes for number and then press and release **left** turn switch to advance through the digits	Digit will display on odometer In this example, the lamp will flash 1 time	
10	Quickly press **key fob** button **2 times** and release	3 flashes turn signals & indicators	You've confirmed 1 as a number for the second digit and have advanced to entering the third digit
11	Press **left** turn switch **1 time** and release	None if no code entered 1-9 flashes if code previously entered	A lack of confirmation flashes indicates no digit is entered
12	In this example, you will repeat this step three times If code previously entered, count flashes for number and then press and release **left** turn switch to advance through the digits	Security lamp flashes to indicate each digit selected Digit will display on odometer In this example, the lamp will flash 3 times	You've selected 3 as a number for the third digit
13	Quickly press **key fob** button **2 times** and release	4 flashes turn signals & indicators	You've confirmed 3 as a number for the third digit and have advanced to entering the fourth digit
14	Press **left** turn switch **1 time** and release	None if no code entered 1-9 flashes if code previously entered	A lack of confirmation flashes indicates no digit is entered
15	In this example, you will perform this step one time If code previously entered, count flashes for number and then press and release **left** turn switch to advance through the digits	Security lamp flashes to indicate each digit selected Digit will display on odometer In this example, the lamp will flash 1 time	You've selected 1 as a number for the fourth digit
16	Quickly press **key fob** button **2 times** and release	5 flashes turn signals & indicators	You've confirmed 1 as a number for the fourth digit and have advanced to entering the fifth digit
17	Press **left** turn switch **1 time** and release	None if no code entered 1-9 flashes if code previously entered	A lack of confirmation flashes indicates no digit is entered
18	In this example, you will repeat this	Security lamp	You've selected 3 as a

	step three times If code previously entered, count flashes for number and then press and release **left** turn switch to advance through the digits	flashes to indicate each digit selected Digit will display on odometer In this example, the lamp will flash 3 times	number for the fifth digit
19	Quickly press **key fob** button **2 times** and release	1 flashes turn signals & indicators	You've confirmed 3 as a number for the fifth digit and have gone back to the first digit
20	Turn **IGN** key OFF		
21	Write down code in owner's manual		
22	Arm the security system and attempt to disarm using personal code entry		

Enable Auto-arming Selection

The security system allows remote arming via the key fob at anytime. However, if the system is remotely disarmed (with the key fob) but the ignition key is not turned ON within 30 seconds, the system will rearm itself when auto-arming is enabled.

To set the auto-arming selection, refer to Auto-arming Configuration.

NOTE:

Auto-arming configuration cannot be altered on Netherlands vehicles.

Auto-arming Configuration

STEP NO.	ACTION	WAIT FOR CONFIRMATION	NOTES
1	Turn **IGN** key **ON**-OFF-**ON**-OFF-**ON**		
2	Press **left** turn switch **2 times** and release	1-4 flashes turn signals & indicators depending on vehicle configuration (See BATTERY DISCONNECTS AND CONFIGURING section)	1 flash - Worldwide TSM, no security system 2 flashes - North American/Domestic configuration TSSM 3 flashes - Netherlands configuration TSSM (Dealer configurable only) 4 flashes - international configuration TSSM
3	Press and hold **key fob** button until confirmation is received	1 flash turn signals & indicators	
4	Press and hold **key fob** button until confirmation is received	2 flashes turn signals & indicators	
5	Press **left** turn switch **1 time** and release	Turn signals & indicators flash to indicate the current option selected	1 flash - auto-arming disabled 2 flashes - auto-arming enabled
6	Press and release **left** turn switch to advance through options	Turn signals & indicators flash to indicate the new option selected	1 flash - auto-arming disabled 2 flashes - auto-arming enabled
7	Turn **IGN** key OFF		

Alarm Sensitivity

The tamper warning has four sensitivity settings:

- Extremely low.
- Low.
- Medium.
- High.

The selection chosen controls the sensitivity of the security system in regard to short disturbances of the vehicle (i.e. someone bumps into the vehicle).

To set alarm sensitivity, refer to Alarm Sensitivity Adjustment.

Alarm Sensitivity Adjustment

STEP NO.	ACTION	WAIT FOR CONFIRMATION	NOTES
1	Turn **IGN** key **ON**-OFF-**ON**-OFF-**ON**		
2	Press **left** turn switch **2 times** and release	1-4 flashes turn signals & indicators depending on vehicle configuration (See BATTERY DISCONNECTS AND CONFIGURING section)	1 flash - Worldwide TSM, no security system 2 flashes - North American/Domestic configuration TSSM 3 flashes - Netherlands configuration TSSM (Dealer configurable only) 4 flashes - international configuration TSSM
3	Press and hold **key fob** button until confirmation is received	1 flash turn signals & indicators	
4	Press **left** turn switch **1 time** and release	Turn signals & indicators flash to indicate the current option selected	1 flash - extremely low 2 flashes - low sensitivity 3 flashes - medium sensitivity 4 flashes - high sensitivity
5	Press and release **left** turn switch to advance through options	Turn signals & indicators flash to indicate the new option selected	1 flash - extremely low 2 flashes - low sensitivity 3 flashes - medium sensitivity 4 flashes - high sensitivity
6	Turn **IGN** key OFF		

Storage Mode Configuration

The security system has a special mode for long term storage. This mode prevents the security system from discharging the battery after a period of days without any ignition key switch activity. Refer to Storage Mode Options.

- If the security system is set to infinite, the system will not go into storage mode. In this case, the customer must use a trickle charger to keep the battery from discharging after 60 days of storage.
- Vehicles will enter storage mode whether the security system is armed or disarmed.

In storage mode, all alarm functions are suspended and the receiver is shut down and will not respond to the key fob. The vehicle is immobilized because the starter motor and Ignition/EFI controllers are disabled. When the storage mode is entered, the security lamp stops flashing to

conserve power.

To wake up the security system from storage mode, the ignition key must be turned ON. This will trigger the alarm if the system was previously armed. You must use the key fob or personal code to disarm the system and stop the alarm.

If the ignition is switched from ON-OFF quickly, then the security system will wake-up without activating the alarm.

To set the storage mode preferences, refer to Storage Mode Configuration.

Storage Mode Options

FLASHES	TIME
1 flash	10 days (factory setting)
2 flashes	20 days
3 flashes	60 days
4 flashes	infinite

Storage Mode Configuration

STEP NO.	ACTION	WAIT FOR CONFIRMATION	NOTES
1	Turn **IGN** key **ON**-OFF-**ON**-OFF-**ON**		
2	Press **left** turn switch **2 times** and release	1-4 flashes turn signals & indicators depending on vehicle configuration (See BATTERY DISCONNECTS AND CONFIGURING section)	1 flash - Worldwide TSM, no security system 2 flashes - North American/Domestic configuration TSSM 3 flashes - Netherlands configuration TSSM (Dealer configurable only) 4 flashes - international configuration TSSM
3	Press and hold **key fob** button until confirmation is received	1 flash turn signals & indicators	
4	Release and then hold **key fob** button until confirmation is received	2 flashes turn signals & indicators	
5	Release and then hold **key fob** button until confirmation is received	3 flashes turn signals & indicators	
6	Press **left** turn switch **1 time** and release	Turn signals & indicators flash to indicate the current option selected	see Storage Mode Options table
7	Press **left** turn switch to advance through options	Turn signals & indicators flash to indicate the new option selected	see Storage Mode Options table
8	Turn **IGN** key OFF		

Security System Maintenance

Key Fob Battery Replacement

Replace the key fob battery every 2 years.

1. See Key Fob Open Case: Front. Place a thin blade between the 2 halves of the key fob case and slowly turn to open.

2. See Key Fob Battery Replacement. Remove the old battery and discard.

   NOTE:

   Dispose of old battery in accordance with local regulations.

3. Install a new battery (Panasonic® 2032 or equivalent) with the positive (+) side down.

4. Verify the button rubber is fully seated.

5. Close the case by aligning the two halves and snap together.

6. While standing next to the motorcycle, press and hold the key fob button for 10-15 seconds until the security system responds with two turn signal flashes/siren chirps.

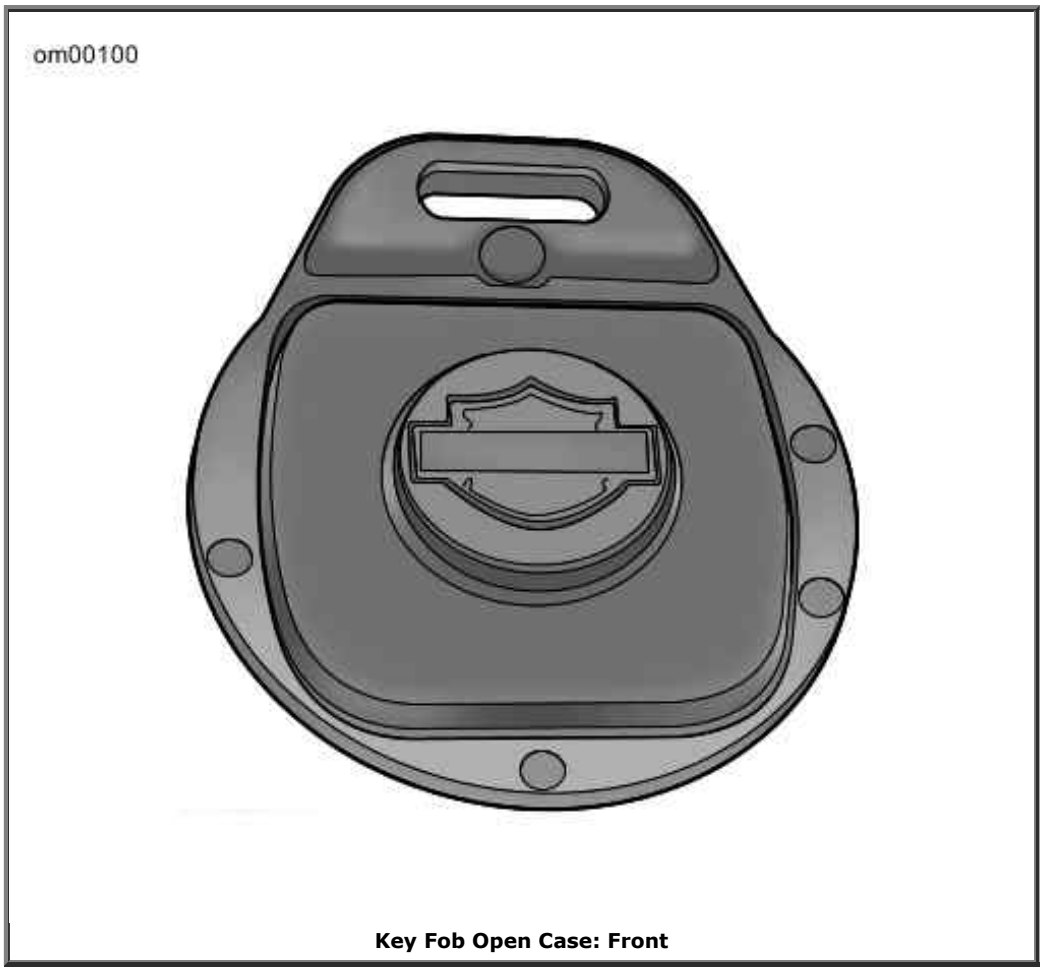

Key Fob Open Case: Front

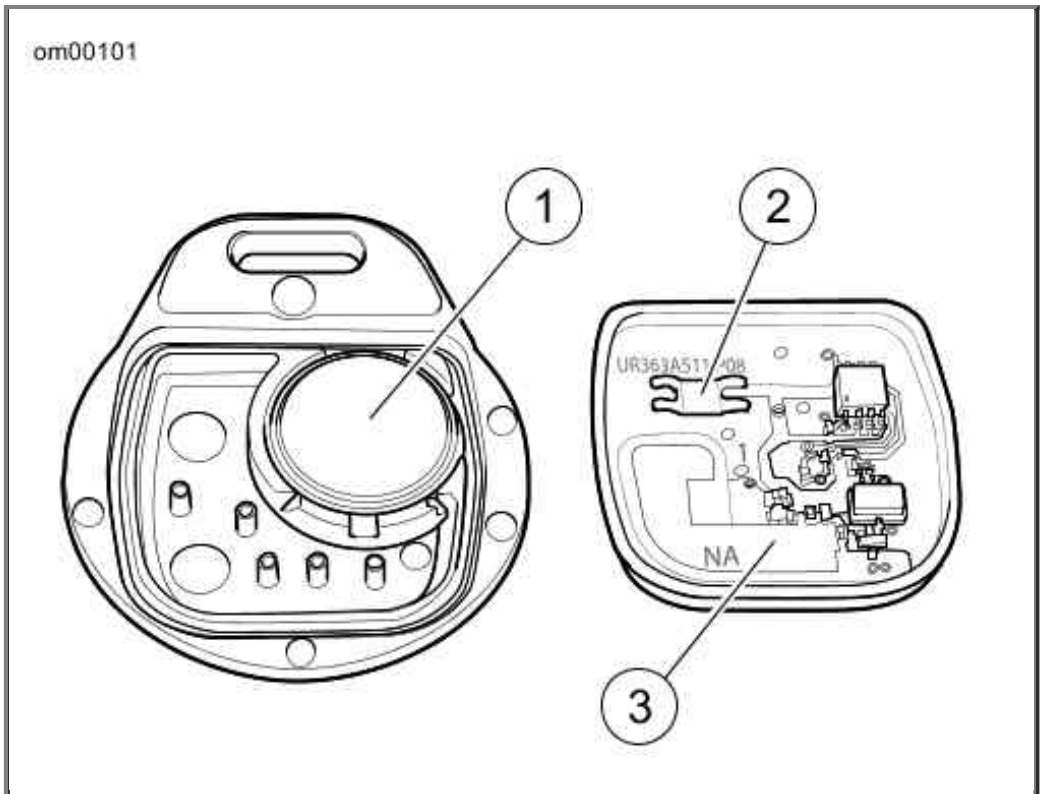

1. Battery
2. Battery contact
3. Circuit board

Key Fob Battery Replacement

Battery Disconnects and Configuring

After reconnecting a battery, the security system will not enter the configuration mode on the first attempt. Therefore, after all battery reconnects, the configuration sequence must be modified as follows.

1. Set run switch to **OFF**, cycle ignition key **ON**-OFF-**ON**-OFF-**ON** and press left turn signal switch twice.
2. Wait for one to three confirmation flashes of the turn signals and then set ignition key switch to **OFF**.
3. Repeat steps listed above.
4. Continue with configuration sequence listed.

Disabling the System

Disarm the security system using the key fob or personal code. At this point, the security fuse may be removed or battery disconnected.

Troubleshooting the Security System

If the key fob button has been pressed numerous times while away from the vehicle, the key fob may fall out of synchronization with the security system. If this happens, the security system might fail to recognize the key fobs commands.

To solve this problem, press and hold the key fob button for 10-15 seconds until the security system responds with two turn signal flashes. After confirmation, you may resume normal key fob operation.

Siren Diagnostics

- See Siren. If the siren is armed and the internal siren battery is dead, shorted, disconnected, or has been charging for a period longer than 24 hours, the siren will respond with three chirps on arming instead of two.
- The internal siren battery may not charge if the vehicle's battery is less than 12.5 volts.
- If the siren does not chirp two or three times on a valid arming command from the security system, the siren is either not connected, not working, or the siren wiring was opened or shorted while the siren was disarmed.
- If the siren enters the self-driven mode where it is powered from the siren internal 9 volt battery, the turn signal lamps may or may not alternately flash. If the security system activates the siren, the turn signal lamps will alternately flash. If the siren has been armed and a security event occurs, and the siren is in self-driven mode, the siren will alarm for 20 to 30 seconds and then turn off for 5 to 10 seconds. This alarm cycle will be repeated ten times if the siren is in the self-driven mode.

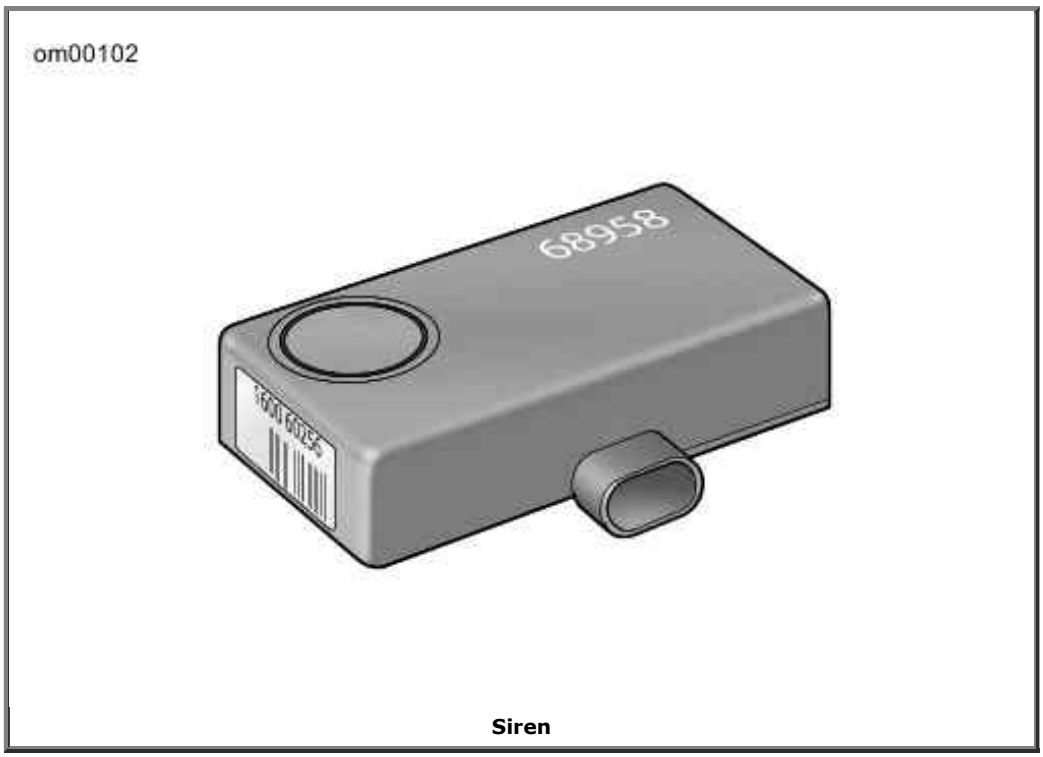

Siren

Operation

Operating Recommendations: VRSC Models

CAUTION

Do not run the engine at extremely high RPM with clutch disengaged or transmission in neutral. Running an engine at high RPM can result in engine damage. (00177a)

- The maximum recommended safe engine speed is 9000 RPM.
- Do not idle engine unnecessarily for more than a few minutes with motorcycle standing still.

CAUTION

Do not exceed the maximum safe RPM specified below under any conditions. Exceeding the maximum safe engine RPM can result in equipment damage. (00248a)

NOTE:

The maximum recommended engine speed for VRSC model motorcycles is 9000 RPM.

If motorcycle will not be ridden for a period of three weeks or more with security system armed, it is recommended to connect a Battery Tender to maintain battery charge. If security system will not be armed, it is recommended that the 40 Amp maxi-fuse be removed. See Electrical Protection: VRSC Models.

CAUTION

Use ONLY Genuine Harley-Davidson Extended Life Antifreeze and Coolant. Use of other coolants/mixtures may lead to engine damage. (00179a)

Have the engine checked regularly and keep it well tuned. This applies particularly to a motorcycle equipped with windshield and fairing.

⚠WARNING

When riding on wet roads, brake efficiency and traction are greatly reduced. Failure to use care when braking, accelerating or turning on wet roads can cause loss of control, which could result in death or serious injury. (00041a)

NOTES:

- *While the motorcycle is operating, electronically controlled cooling fans will turn on periodically. This is normal operation.*
- *When descending upon a long, steep grade, downshift and use engine compression together with intermittent application of both brakes to slow the motorcycle.*

⚠WARNING

Continuous use of brake causes overheating and reduced efficiency, which could result in death or serious injury. (00042a)

CAUTION

Do not coast for long distances with the engine off. The transmission is properly lubricated only when the engine

is running. Coasting long distances can result in transmission damage. (00180a)

⚠WARNING

Do not tow a disabled motorcycle. Towing can adversely affect stability and handling, which could result in death or serious injury. (00017a)

Break-in Riding Rules: VRSC Models

The First 500 Miles (800 Kilometers)

The sound design, quality materials and workmanship that are built into your new Harley-Davidson will give you optimum performance right from the start.

To allow your engine to seat in its critical parts, we recommend for the first 500 miles (800 kilometers), observe the riding rules provided below. Adherence to these recommendations will help to assure good future durability and performance.

1. Riding the first 50 miles (80 kilometers), keep the engine speed below 4000 RPM in any gear. Do not lug the engine in higher gears by running or accelerating at very low RPM.
2. Up to 500 miles (800 kilometers), avoid operating at any steady engine speed for long distances. Engine speed up to 5500 RPM in any gear is permissible.
3. Avoid fast starts at wide open throttle and drive slowly until the engine has warmed up.

Pre-Riding Checklist: VRSC Models

⚠WARNING

Read the CONTROLS AND INDICATORS section before riding your motorcycle. Failure to understand the operation of the motorcycle could result in death or serious injury. (00043a)

Before riding your motorcycle at any time, make a general inspection to be sure it is in safe riding condition.

1. Check the amount of fuel in the tank and add fuel if required.

⚠WARNING

Avoid spills. Slowly remove filler cap. Do not fill above bottom of filler neck insert, leaving air space for fuel expansion. Secure filler cap after refueling. Gasoline is extremely flammable and highly explosive, which could result in death or serious injury. (00028a)

⚠WARNING

Use care when refueling. Pressurized air in fuel tank can force gasoline to escape through filler tube. Gasoline is extremely flammable and highly explosive, which could result in death or serious injury. (00029a)

⚠WARNING

Stop the engine when refueling or servicing the fuel system. Do not smoke or allow open flame or sparks near gasoline. Gasoline is extremely flammable and highly explosive, which could result in death or serious injury. (00002a)

CAUTION

Do not spill fuel onto the motorcycle while refueling. Immediately wipe up fuel spills on your motorcycle. Fuel can cause damage to cosmetic surfaces. (00147b)

2. Adjust mirrors to proper riding positions.
3. Check the oil level. See Checking Oil Level: VRSC Models.
4. Check the coolant level. See Coolant Level: VRSC Models.
5. Check the controls to be sure they are operating properly. Operate the front and rear brakes, throttle, clutch and shifter.
6. Check steering for smoothness by turning the handlebars through the full operating range.

⚠WARNING

Be sure tires are properly inflated, balanced and have adequate tread. Inspect your tires regularly and see a Harley-Davidson dealer for replacements. Riding with excessively worn, unbalanced or under-inflated tires can adversely affect stability and handling, which could result in death or serious injury. (00014a)

7. Refer to Tire Pressures: 2006 VRSC Models. Check tire condition and pressure. Incorrect pressure will result in poor riding characteristics and can affect handling and stability. Adhere to tire specifications for correct inflation pressures to use.
8. Check all electrical equipment and switches including the stop lamp, turn signals and horn, for proper operation.
9. Check for any fuel, oil or hydraulic fluid leaks.
10. Check rear belt adjustment.

11. Service your motorcycle as necessary.

Starting the Engine: EFI Models

General

CAUTION

The engine should be allowed to run slowly for 15-30 seconds. This will allow the engine to warm up and let oil reach all surfaces needing lubrication. Failure to comply can result in engine damage. (00181a)

There are some differences between a carbureted Harley-Davidson and a fuel injected Harley-Davidson. The sequential port fuel injection system simplifies the starting procedure, compared to carbureted Harley-Davidsons.

Do not roll the throttle before starting. Rolling the throttle before starting the motorcycle is unnecessary.

There is no choke or enrichener or fuel supply valve on a fuel injected Harley-Davidson. The engine management system handles starting and running the engine at all temperatures and conditions.

Starting

⚠WARNING

Shift transmission to neutral before starting engine to prevent accidental movement, which could result in death or serious injury. (00044a)

1. Turn ignition/headlamp key switch to IGNITION position. Do not roll the throttle.

   NOTE:

   The engine lamp will light for approximately 4 seconds and you will hear the fuel pump purr for approximately 2 seconds as it operates to fill the fuel lines with gasoline.

2. See Right Handlebar Controls: VRSC Models. Turn the off/run switch to RUN position.

3. Press the starter button to start the motorcycle.

4. When the engine has started, you can operate your motorcycle as you normally would after raising the jiffy stand.

NOTE:

If the fuel tank becomes completely dry, it may take a few seconds longer to start the motorcycle after filling the tank. It will not be necessary to take any extraordinary measures before starting the motorcycle.

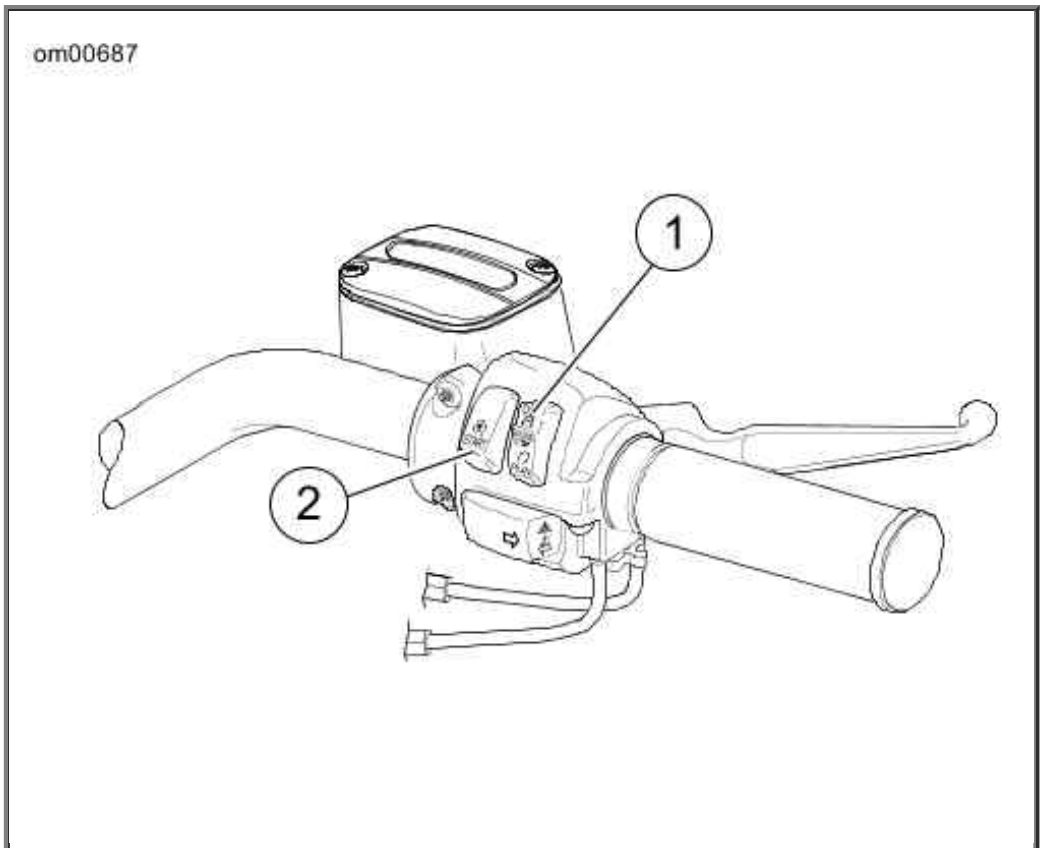

1. Engine off/run switch
2. Engine start switch

Right Handlebar Controls: VRSC Models

Stopping The Engine

1. Stop the engine by turning OFF the engine stop switch on the right handlebar.
2. Turn OFF the ignition/headlamp key switch. If the engine should be stalled or stopped in any way, turn off the ignition/headlamp key switch at once to prevent battery discharge.

Shifting Gears

Getting Started

CAUTION

The clutch must be fully disengaged before attempting a gear shift. Failure to fully disengage the clutch can result in equipment damage. (00182a)

Gear shift pattern is first gear down, next four gears up.

NOTE:

Always start engine with transmission in neutral. Always start motorcycle forward motion from first gear.

1. With motorcycle engine running and jiffy stand retracted, pull the clutch hand lever in against handlebar grip to fully disengage clutch.

2. Push the foot shift lever down to end of its travel and release. The transmission is now in first gear.

3. To start forward motion, release the clutch lever slowly to engage the clutch and at the same time, open throttle gradually.

Upshift (Acceleration)

Refer to Upshift (Acceleration) Gear Speeds: VRSC Models. Engage second gear after the motorcycle has reached at the appropriate shifting speed.

Upshift (Acceleration) Gear Speeds: VRSC Models

GEAR CHANGE	MPH	KPH
First to second	15	25
Second to third	25	40
Third to fourth	35	55
Fourth to fifth	45	72

1. Close the throttle.

2. Disengage the clutch (pull clutch lever in).

3. See Gear Shift Lever (Upshift): VRSC Models. Lift the gear shift lever up to the end of its travel and release.

4. Engage the clutch (release clutch lever) and gradually open the throttle.

5. Repeat the previous steps to engage third, fourth, and fifth gears.

NOTES:

- *Disengage the clutch completely before each gear change.*
- *Partially close the throttle so the engine will not drag when clutch is again engaged (clutch lever released).*

Downshift (Deceleration)

⚠WARNING

Do not downshift at speeds higher than those listed in the Changing Gear Speeds table. Shifting to lower gears when speed is too high can cause the rear wheel to lose traction and lead to loss of vehicle control, which could result in death or serious injury. (00045a)

Gear shift pattern is first gear down; next four gears up. Refer to Downshift (Deceleration) Gear Speeds for shifting speeds.

Downshift (Deceleration) Gear Speeds

GEAR CHANGE	MPH	KPH
Fifth to fourth	40	65
Fourth to third	30	50
Third to second	20	30
Second to first	10	15

NOTE:

The shifting points shown in the tables constitute a recommendation. Vehicle owners may determine that their own individual shifting patterns may differ than those stated and are additionally appropriate for individual riding styles.

See Gear Shift Lever (Downshift): VRSC Models. When engine speed decreases, as in climbing a hill or running at a reduced speed, shift to the next lower gear while partially closing the throttle so the engine accelerates as soon as the clutch lever is released.

NOTES:

- *Disengage the clutch completely before each gear change.*
- *Partially close the throttle so the engine will not drag when clutch is again engaged (clutch lever released).*

CAUTION

Shift to neutral before stopping engine. Shifting mechanism can be damaged by shifting gears while engine is stopped. (00183a)

The gear shifter mechanism permits shifting the transmission to neutral from either first or second gear.

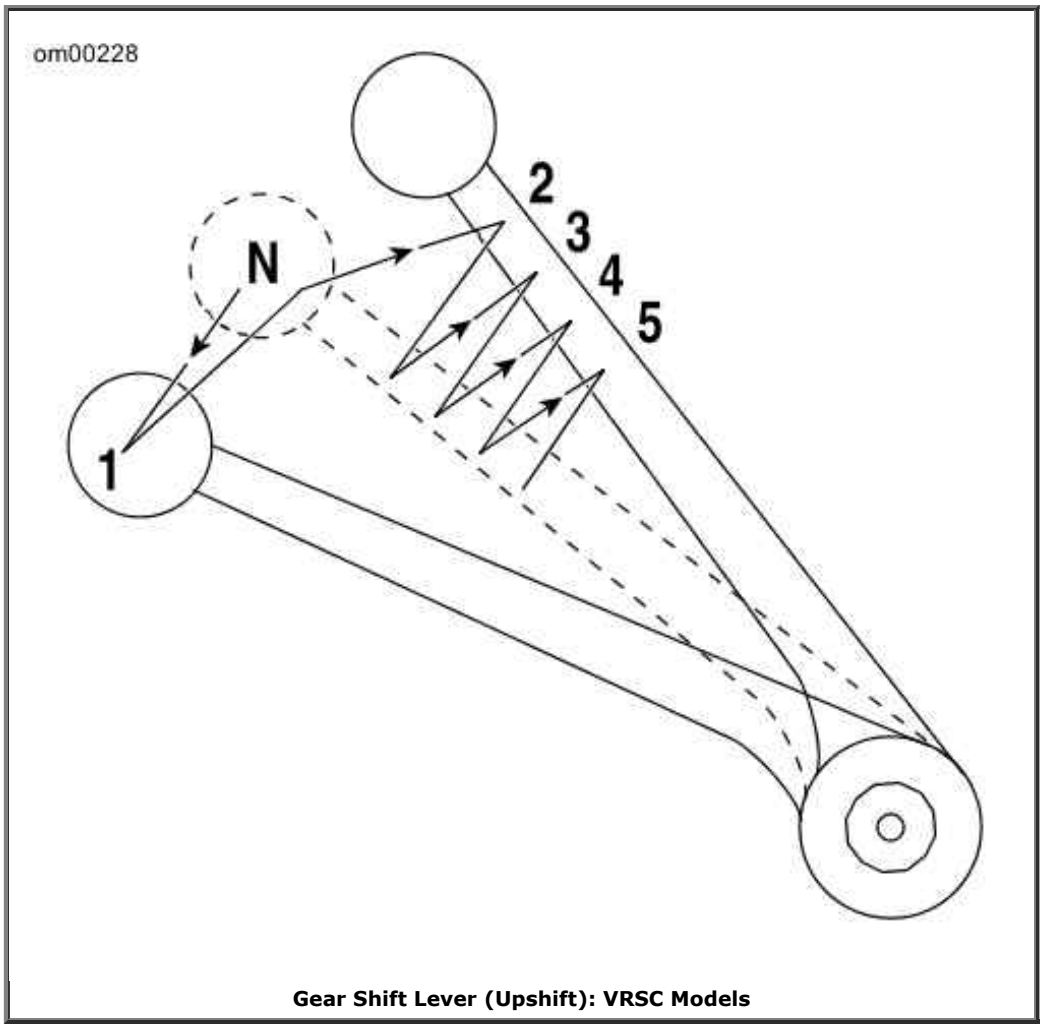

Gear Shift Lever (Upshift): VRSC Models

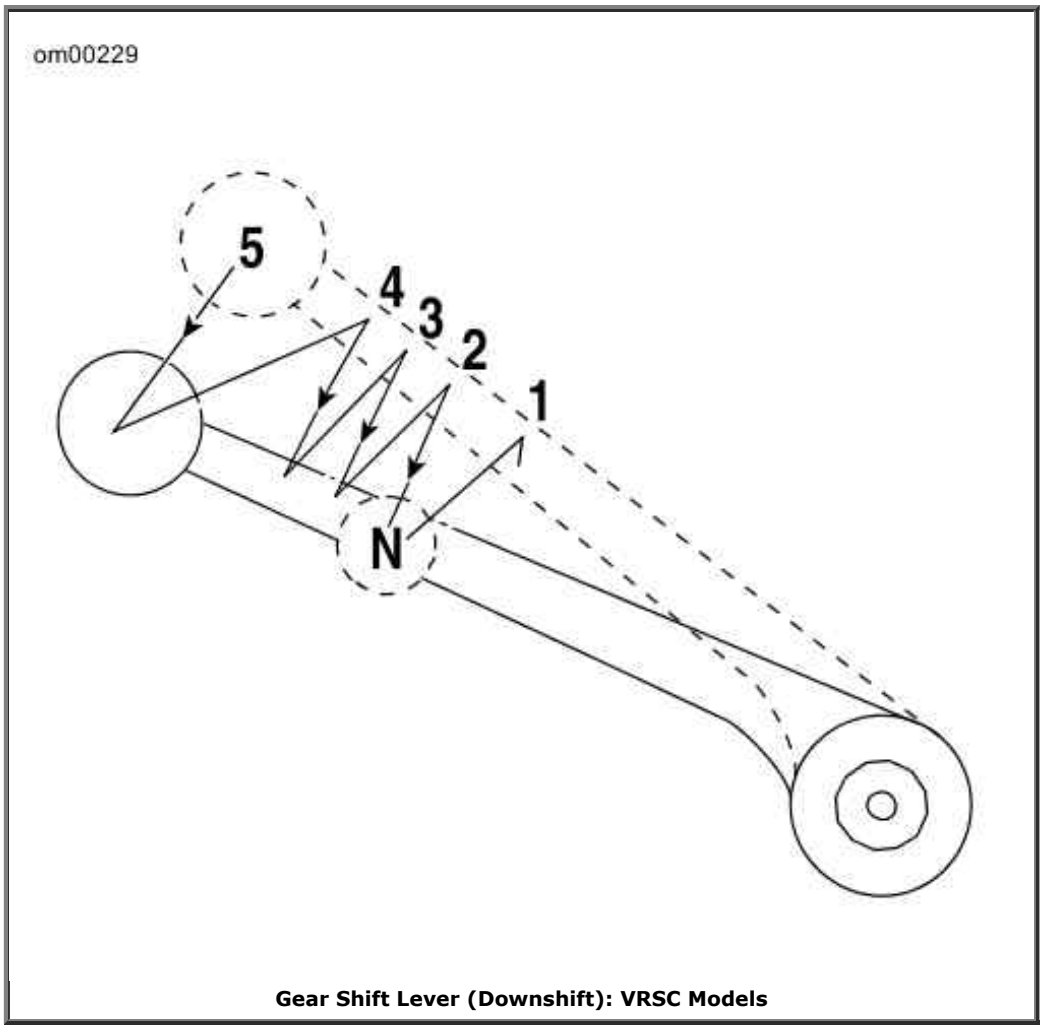

Gear Shift Lever (Downshift): VRSC Models

Maintenance and Lubrication

Safe Operating Maintenance: VRSC Models

Refer to the side view photographs in the front of the manual to locate the items discussed in this section.

⚠WARNING

Perform the service and maintenance operations as indicated in the regular service interval table. Lack of regular maintenance at the recommended intervals can affect the safe operation of your motorcycle, which could result in death or serious injury. (00010a)

Good maintenance means a safe machine. A careful check of certain equipment must be made after periods of storage and frequently between the regular service intervals to determine if additional maintenance is necessary.

Check the following items:

1. Tires for correct pressure, abrasions or cuts.
2. Drive belt for proper tension.
3. Brakes, steering and throttle for responsiveness.
4. Brake fluid level and condition. Hydraulic lines and fittings for leaks. Also, check brake pads and discs for wear.
5. Cables for fraying or crimping and free operation.
6. Engine oil level.
7. Engine coolant level.
8. Clutch fluid level.
9. Headlamp, tail lamp, brake lamp and directional lamp operation.

Break-in Maintenance

NOTE:

The performance of new motorcycle initial service is required to keep your new motorcycle warranty in force and to assure proper emissions system operation.

Refer to Regular Service Intervals: 2006 VRSC Models. After a new motorcycle has been ridden its first 1000 miles (1600 kilometers), it should be taken to the dealer from whom it was purchased for initial service operations.

Engine Lubrication

CAUTION

Do not switch lubricant brands indiscriminately because some lubricants interact chemically when mixed. Use of inferior lubricants can damage the engine. (00184a)

Engine oil is a major factor in the performance and service life of the engine. Always use the proper grade of oil for the lowest temperature expected before the next scheduled oil change. Refer to Recommended Engine Oils: VRSC Models. Your authorized dealer has the proper oil to suit your requirements.

If it is necessary to add oil and Harley-Davidson oil is not available, use an oil certified for diesel engines. Acceptable diesel engine oil designations include: CF-4, CG-4, CH-4 and CI-4.

The preferred viscosities for the diesel engine oils in descending order are: 20W50, 15W40 and 10W40.

At the first opportunity, see an authorized dealer to change back to 100 percent Harley-Davidson oil.

Recommended Engine Oils: VRSC Models

HARLEY-DAVIDSON TYPE	VISCOSITY	HARLEY-DAVIDSON RATING	LOWEST AMBIENT TEMPERATURE	COLD WEATHER STARTS BELOW 50° F (10° C)
HD Multi-grade	SAE 10W40	HD 360	Below 40° F (4° C)	Excellent
HD Multi-grade	SAE 20W50	HD 360	Above 40° F (4° C)	Good

Checking Oil Level: VRSC Models

NOTE:

This engine has a wet sump, an integral transmission, gear driven primary drive and wet clutch. This design allows engine oil in the sump to be used to lubricate the engine, transmission and primary drive. The clutch and primary drive are housed on the right side of the engine.

CAUTION

Oil level cannot be accurately measured on a cold engine. For pre-ride inspection with the motorcycle upright (not leaning on jiffy stand) on level ground, the oil should register approximately at the midpoint of the cross-hatch area on the dipstick when the engine is cold. Do NOT add oil to bring the level to the FULL mark on a COLD engine. (00186a)

See Dipstick Location: VRSC Models. Dipstick is located on left side at front of engine.

Cold Engine Oil Level Check

Check the oil level with the engine **COLD** as follows:

1. Stand the motorcycle upright (not leaning on the jiffy stand) on a level surface.
2. See Dipstick Location: VRSC Models. Unscrew the oil filler cap (with attached dipstick) by turning the filler cap counterclockwise. Remove the filler cap and dipstick and wipe the dipstick clean.
3. Screw the filler cap into the engine. Make sure the cap is fully seated on the crankcase.
4. See Engine Oil Level: VRSC Models. Remove the filler cap again and check the oil level on the dipstick.
5. If the oil level is below the midpoint of the cross-hatch area on the dipstick, add enough Harley-Davidson oil to bring the level up to the midpoint of the cross-hatch area shown.

CAUTION

Do NOT operate the engine when the oil level is below the add mark on the dipstick at operating temperature. Engine damage will result. (00187a)

CAUTION

To avoid over-filling the oil sump, wait approximately three minutes after adding oil before checking the oil level with the dipstick. An over-filled sump can cause engine damage. (00188a)

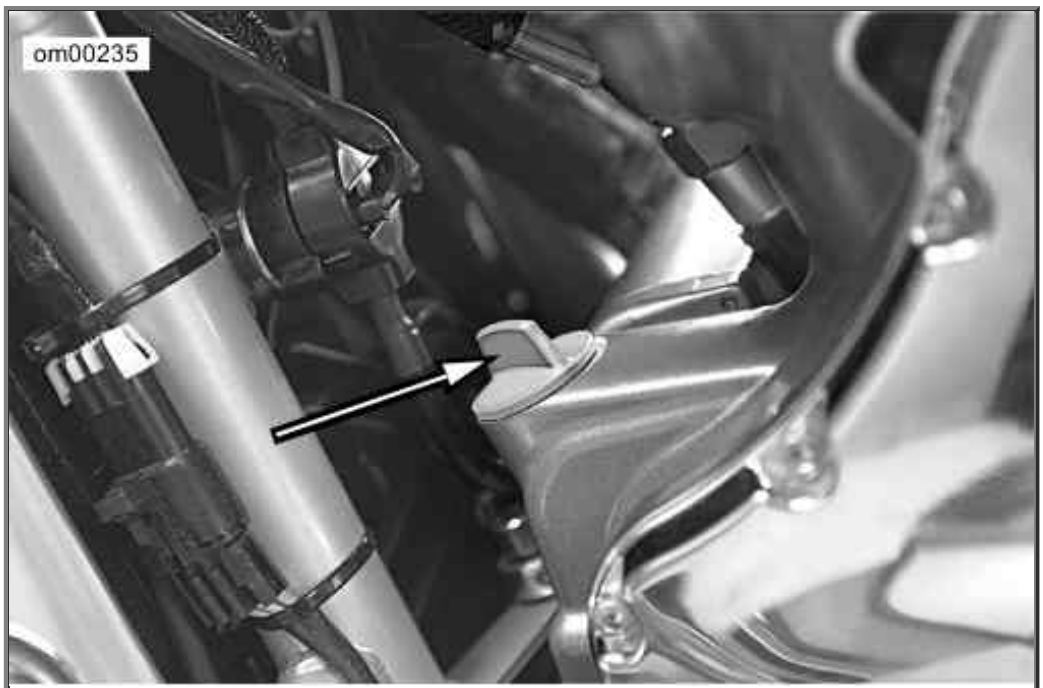

Dipstick Location: VRSC Models

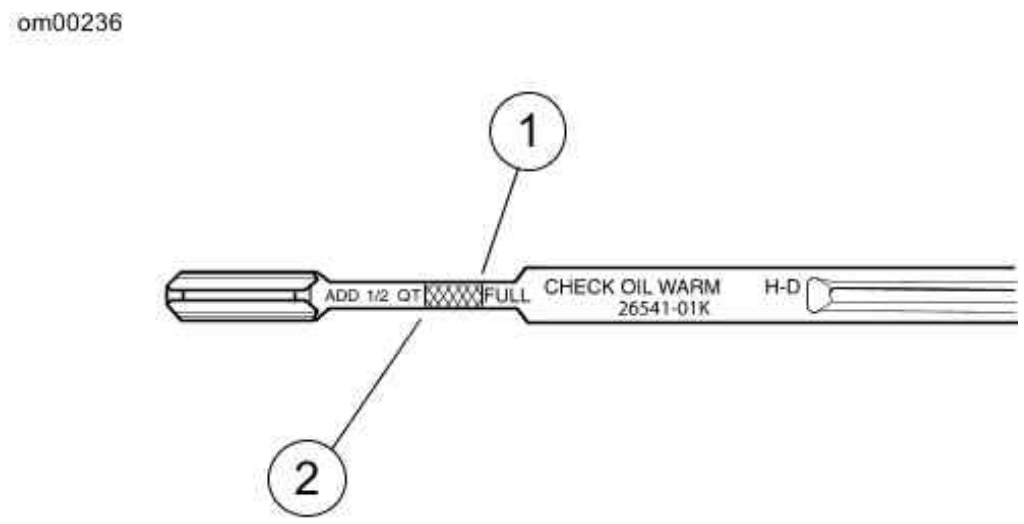

1. Full mark
2. Add mark. Do NOT operate the engine when the oil level is below the add mark at operating temperature.

Engine Oil Level: VRSC Models

Hot Engine Oil Level Check

Check the oil level with the engine at normal operating temperature as follows:

1. Stop the engine and allow the oil to drain into the sump for about two minutes.
2. Stand the motorcycle upright (not leaning on the jiffy stand) on a level surface.
3. See Dipstick Location: VRSC Models. Unscrew the oil filler cap (with attached dipstick) by turning the filler cap counterclockwise. Remove the filler cap and dipstick and wipe the dipstick clean.
4. Screw the filler cap into the engine. Make sure the cap is fully seated on the crankcase.
5. See Engine Oil Level: VRSC Models. Remove the filler cap again and check the oil level on the dipstick.
6. If the oil level is below the FULL mark on the dipstick, add enough Harley-Davidson oil to bring the level up to the FULL mark shown in Engine Oil Level: VRSC Models.

NOTE:

The engine will require a longer warm-up period in colder weather.

CAUTION

Do not allow hot oil level to fall below Add/Fill mark on dipstick. Doing so can result in equipment damage and/or equipment malfunction. (00189a)

CAUTION

Do not overfill oil sump. Doing so can result in oil carryover to the air cleaner leading to equipment damage and/or equipment malfunction. (00191a)

- Check the engine oil supply at each complete fuel refill.
- Refer to Regular Service Intervals: 2006 VRSC Models. The oil should be changed according to the Regular Service Intervals in the Maintenance Schedule in normal service at warm or moderate temperatures.
- Oil change intervals should be shorter in cold weather. See Winter Lubrication.
- The oil ADD mark is 1/2 quart (0.473 liters) to full.

Refer to the vehicle's service manual or see a Harley-Davidson dealer for proper procedures on draining the oil.

NOTE:

Dispose of oil in accordance with local regulations.

Changing Oil and Oil Filter: VRSC Models

See Applying Thin Oil Film. The oil filter is located on an oil filter mount in front of the engine.

⚠WARNING

Be sure that no lubricants or fluids get on tires, wheels or brakes when changing fluid. Traction can be adversely affected, which could result in loss of control of the motorcycle and death or serious injury. (00047d)

CAUTION

Do not switch lubricant brands indiscriminately because some lubricants interact chemically when mixed. Use of inferior lubricants can damage the engine. (00184a)

VRSC vehicles require a premium oil filter (Part No. 63793-01K).

1. See Oil Drain Plug: VRSCR Model. Loosen the oil drain plug and completely drain the oil.

2. Remove the oil filter using an OIL FILTER WRENCH HD-42311 .

   NOTES:
   - *Removal of lower radiator support may make oil filter access easier.*
   - *Dispose of oil and oil filter in accordance with local regulations.*

3. Clean the filter gasket contact surface on the mounting plate (the surface should be smooth and free of any debris or old gasket material).

4. See Applying Thin Oil Film. Apply a thin film of oil to the gasket contact surface on the mounting plate, gasket and **new** oil filter.

5. Screw the filter onto the adapter until the gasket contacts the plate surface, then apply another 2/3-1 full turn.

6. See Oil Drain Plug: VRSCR Model. Install the engine oil drain plug. Tighten the drain plug to 22-30 ft-lbs (30-40 Nm).

7. Refer to Capacities: 2006 VRSC Models. Fill the engine with the recommended amount of oil.

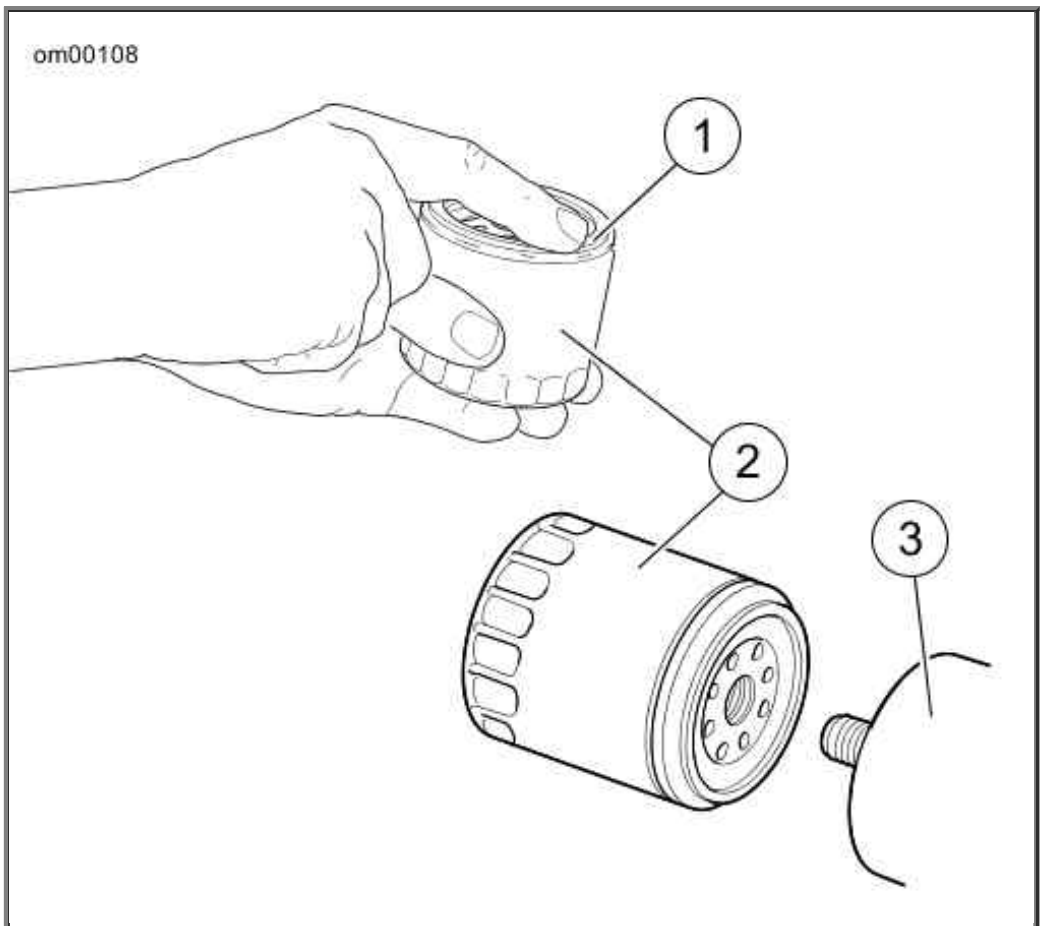

1. Thin oil film ONLY
2. Oil filter
3. Mounting plate

Applying Thin Oil Film

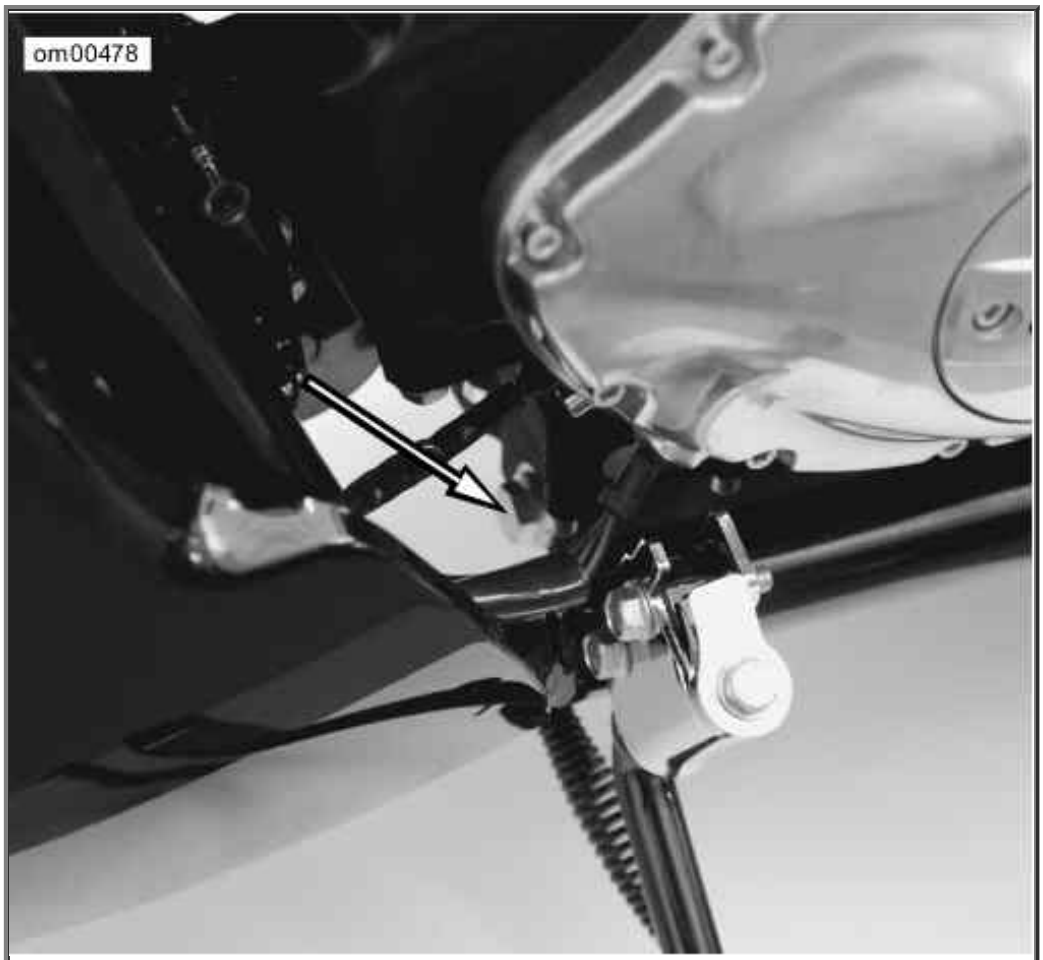

Oil Drain Plug: VRSCR Model

Winter Lubrication

In colder climates, the engine oil change interval should be shorter than normal. Motorcycles used only for short runs must have the engine oil changed more frequently and have a thorough tank flush-out before **new** oil is put in. See an authorized dealer.

NOTE:

The further below freezing the temperature drops, the shorter the oil change interval should be.

Water vapor is a normal by-product of combustion in any engine. During cold weather operation, some of the water vapor condenses to liquid form on the cool metal surfaces inside the engine. In freezing weather this water will become slush or ice and, if allowed to accumulate too long, may block the oil lines and cause damage to the engine.

If the engine is run frequently and allowed to thoroughly warm up, most of this water will become vapor again and will be blown out through the crankcase breather.

If the engine is not run frequently and allowed to thoroughly warm up, this water will accumulate, mix with the engine oil and form a sludge that is harmful to the engine.

Coolant Level: VRSC Models

Checking Level in Expansion Tank

GENUINE HARLEY-DAVIDSON EXTENDED LIFE ANTIFREEZE & COOLANT (Part No. 99822-

02) provides protection to -34° F (-36.7° C). In climates where the temperature falls below -34° F, (-36.7° C), consult a local Harley-Davidson dealer for the proper mixture.

1. See Side Cover: VRSCR Model. Remove the fastener and louvered side cover with vehicle on jiffy stand.

⚠WARNING

Do not remove radiator filler cap when engine is hot. The cooling system is under pressure and hot coolant and steam can escape, which could cause severe burns. Allow engine to cool before servicing the cooling system. (00091a)

⚠CAUTION

At operating temperature, the radiator and oil cooler contain hot fluids. Contact with the radiator or oil cooler can result in minor or moderate burns. (00141a)

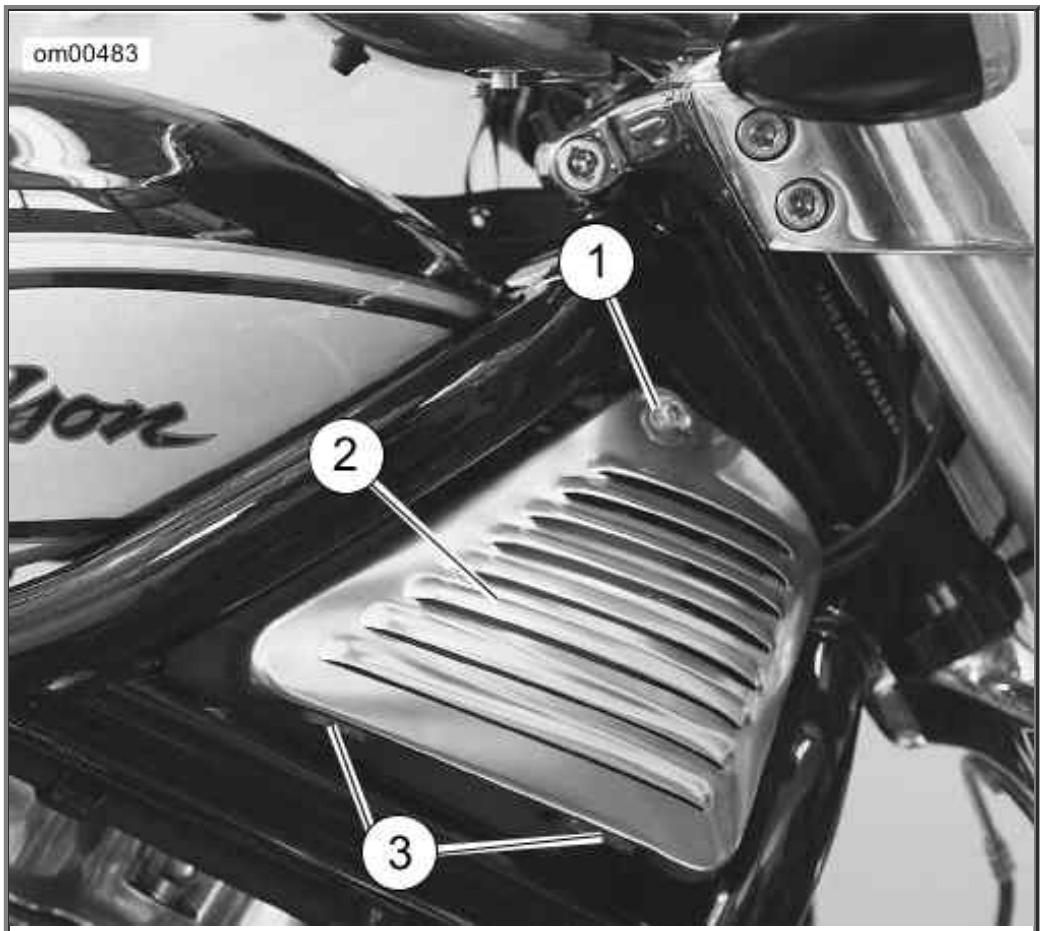

1. Fastener
2. Cover
3. Mounting Tabs

Side Cover: VRSCR Model

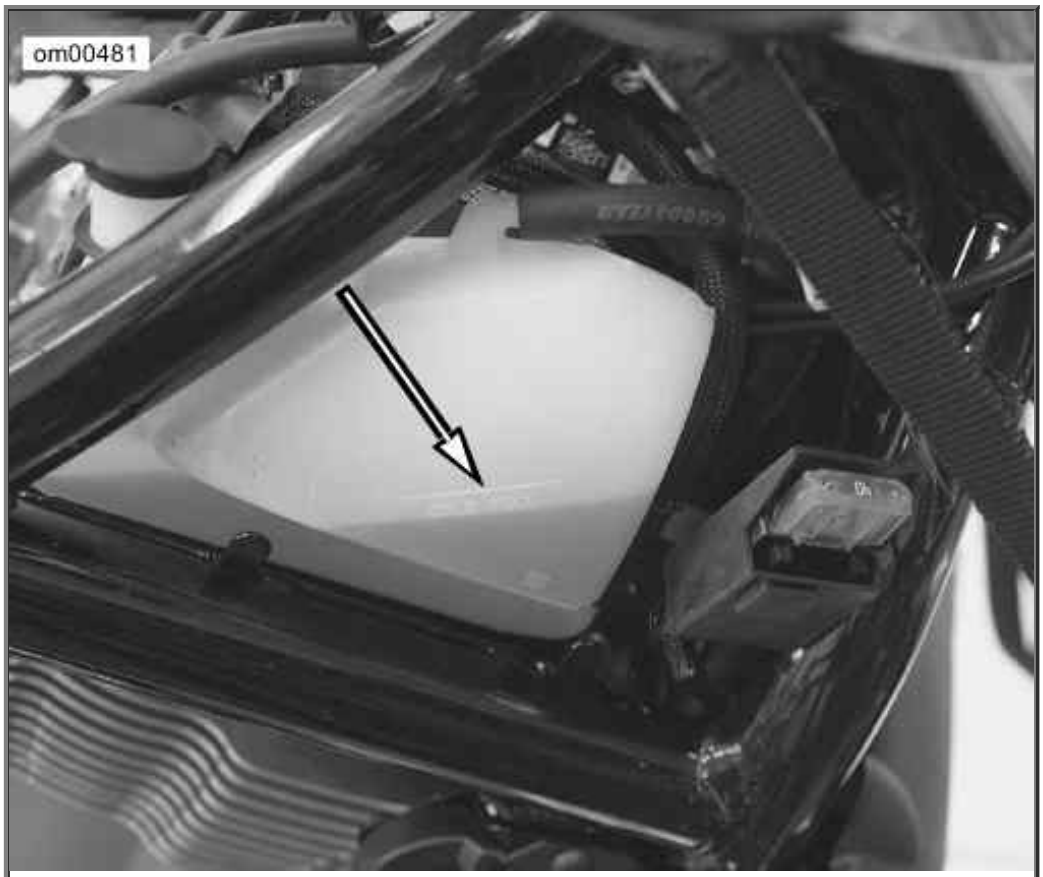

Cold Full Line on Expansion Tank: VRSCR Model

2. See Cold Full Line on Expansion Tank: VRSCR Model. Check the coolant level in the expansion tank with the coolant cold.

CAUTION

De-ionized water must be used with the antifreeze in the cooling system. Hard water can cause scale accumulation in water passages which reduces cooling system efficiency, leading to overheating and engine damage. (00195a)

⚠WARNING

Coolant mixture contains toxic chemicals, which may be fatal if swallowed. If swallowed, do not induce vomiting; call a physician immediately. Use in a well ventilated area. Irritation to skin or eyes can occur from vapors or direct contact. In case of skin or eye contact, flush thoroughly with water and go to hospital, if necessary. Dispose of used coolant according to federal, state and local regulations. (00092a)

3. If the level is below the "COLD FULL" line on the tank, follow the procedure below to top off the coolant level:

    a. Open seat.

    b. See Airbox Cover: VRSCR Model. Remove the airbox cover by turning the bailhead

fastener 1/4 turn counterclockwise. Pull the airbox cover away from the front locating holes.

c. See Expansion Tank Filler Cap (Battery Removed For Illustration Purposes Only). Remove the filler cap from the expansion tank and add Genuine Harley-Davidson Extended Life Antifreeze & Coolant until the fluid level reaches the "COLD FULL" line.

d. Replace the cap on the expansion tank.

e. Reinstall the airbox cover. Secure the cover by turning the bailhead fastener 1/4 turn clockwise.

f. Close the seat.

CAUTION

When closing the seat, make sure the ignition switch is in the FUEL position. If the ignition switch is in any other position when the seat is closed, the seat latch mechanism could be damaged. (00196a)

NOTES:

- *Genuine Harley-Davidson Extended Life Antifreeze & Coolant is pre-diluted and ready to use full-strength. Do NOT add water.*
- *If you find yourself in a location where Genuine Harley-Davidson Extended Life Antifreeze & Coolant is not available, you may use a 50-50 mixture of de-ionized water and Ethylene Glycol-based Antifreeze.*

4. Reinstall the right side cover. Tighten the fastener to 36.0-60.0 in-lbs (4.1-6.8 Nm).

NOTE:

If the coolant expansion tank is empty when the engine is cold, it is possible that air has been drawn into the cooling system. The system must be purged of any trapped air and refilled with coolant. See the VRSC service manual for instructions on the correct procedure.

CAUTION

Clean the front surface of the radiator regularly. Leaves and other debris can collect on the radiator surface and degrade radiator performance which could lead to engine overheating and engine damage. (00197b)

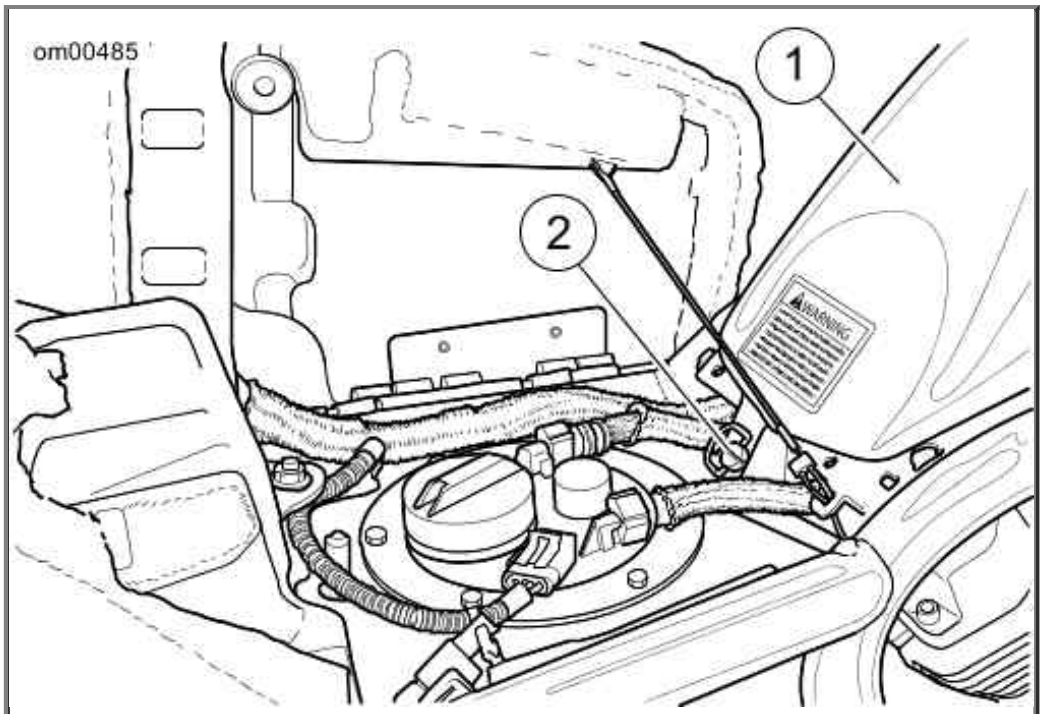

1. Airbox cover
2. Bailhead fasteners

Airbox Cover: VRSCR Model

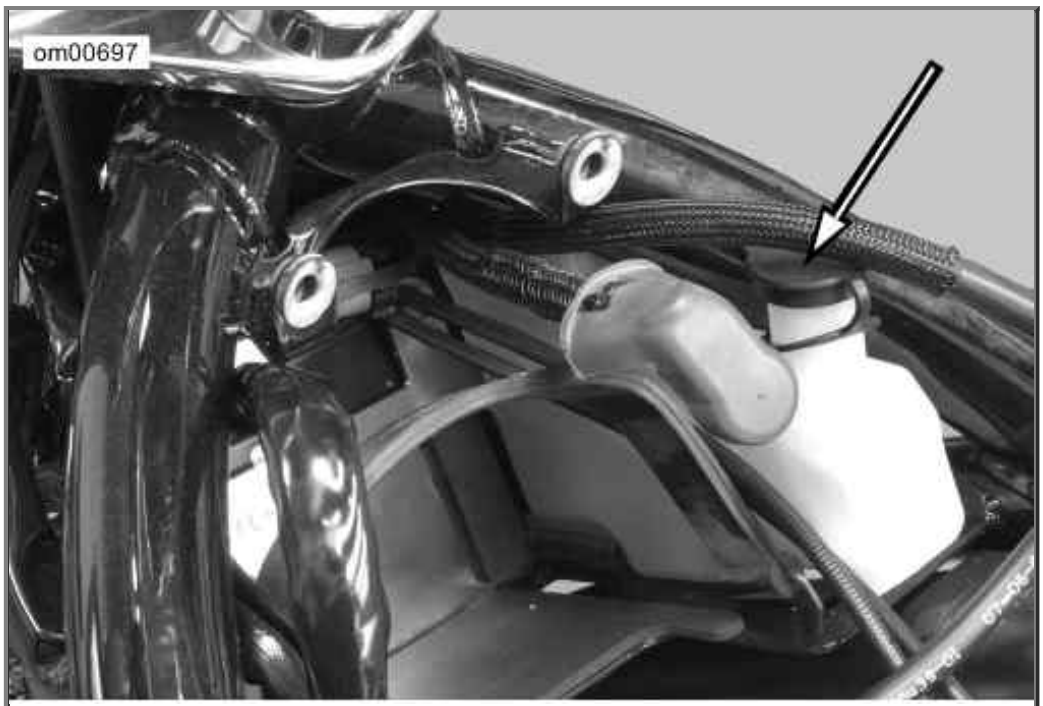

Expansion Tank Filler Cap (Battery Removed For Illustration Purposes Only)

Rear Drive Belt: VRSC Models

The inner tooth surface of the secondary belt has a thin coating of polyethylene lubricant. During initial operation, this coating will wear off as it is burnished into the belt fabric. This is a normal condition and not an indication of belt wear.

Refer to Regular Service Intervals: 2006 VRSC Models. Belt tension is set at the factory and should be checked after the first 1000 miles (1600 kilometers) and at regular intervals thereafter.

NOTE:

Belt deflection window on the debris deflector is graduated in 2.0 mm increments.

See Check Belt Deflection: VRSC Models. Check belt tension with motorcycle cold, standing upright, transmission in neutral and no rider on the motorcycle. Use the BELT TENSION GAUGE HD-35381 to apply 10 lbs. (4.5 kg) of force at the midpoint of the bottom belt strand. Belt deflection should be 10 mm for VRSCR and 6 mm for VRSCA/D. If belt tension adjustment is necessary, see a Harley-Davidson dealer or follow the instructions given in the applicable Service Manual.

Check rear brake caliper position on rear brake disc. Disc should run true within brake caliper.

⚠WARNING

Be sure wheel and brake caliper are aligned. Riding with a misaligned wheel or brake caliper can cause the brake disc to bind and lead to loss of control, which could result in death or serious injury. (00050a)

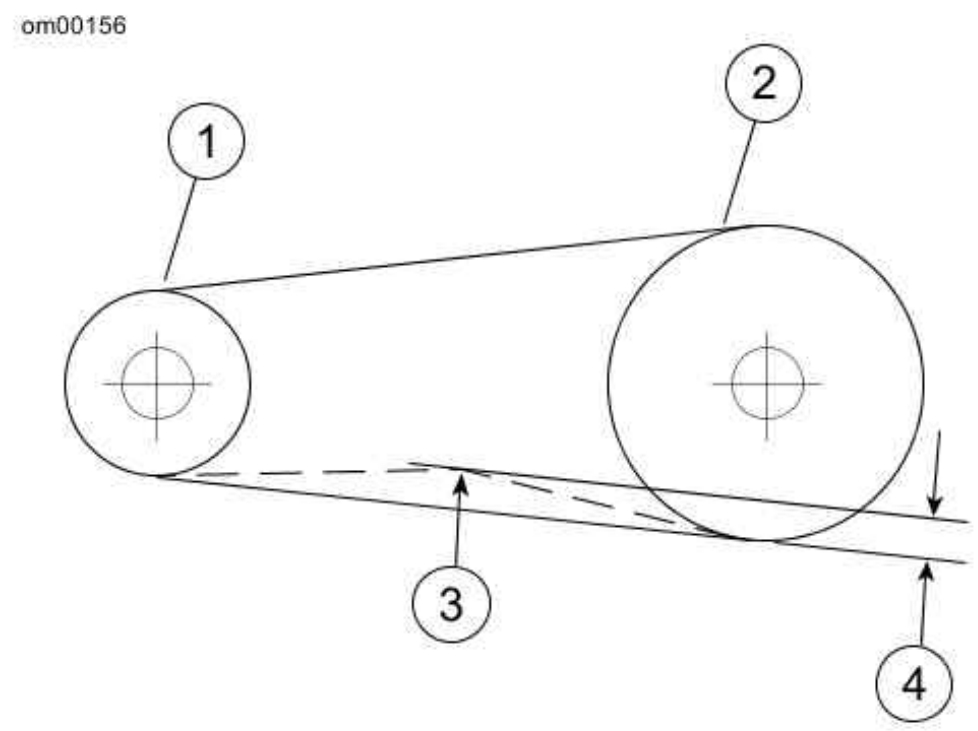

1. Transmission sprocket
2. Rear wheel sprocket
3. Force of 10 lbs (4.5 kg)
4. Deflection

Check Belt Deflection: VRSC Models

Chassis Lubrication

Refer to Regular Service Intervals: 2006 VRSC Models for all maintenance schedules.

CAUTION

Do not switch lubricant brands indiscriminately because some lubricants interact chemically when mixed. Use of inferior lubricants can damage the engine. (00184a)

1. Use recommended special purpose grease for steering head bearings. Use a multipurpose chassis grease for other applications.
2. Remove and lubricate handlebar throttle control grip sleeve with fresh graphite at proper intervals.
3. Lubricate throttle control cables and clutch control cable at proper intervals.
4. Lubricate front brake hand lever and clutch control hand lever only if necessary.
5. Inspect rear fork pivot shaft bearings.
6. Pack the steering head bearings with fresh grease at proper intervals.
7. Lubricate the jiffy stand mechanism with LOCTITE AEROSOL ANTI-SEIZE at proper intervals.

NOTE:

For model specific information regarding the chassis lubrication, refer to the appropriate Service Manual or see a Harley-Davidson dealer.

Oil Applications

Refer to Regular Service Intervals: 2006 VRSC Models for all control connections and parts. Vehicle should be oiled at regular intervals, particularly after washing motorcycle or driving in wet weather.

Front Fork Oil

Refer to Regular Service Intervals: 2006 VRSC Models. Drain front fork oil and refill at proper intervals. If fork does not appear to be working properly or an appreciable amount of oil leakage should develop, see a Harley-Davidson dealer. If there is insufficient oil in either side of fork, the rebound action will be incorrect.

Clutch: VRSC Models

Squeezing the left hand lever causes the clutch master cylinder to actuate and apply pressure to the clutch actuation cylinder mounted in the engine right side cover. The actuation cylinder piston extends and contacts the clutch release bearing to release the clutch.

CAUTION

D.O.T. 4 brake fluid will damage painted and body panel surfaces it comes in contact with. Always use caution and protect surfaces from spills whenever brake work is performed. Failure to comply can result in cosmetic damage. (00239b)

Refer to Regular Service Intervals: 2006 VRSC Models. Check the fluid level as follows:

1. Stand the motorcycle upright (not leaning on the jiffy stand) on a level surface, so the top of the clutch master cylinder is level.

2. See Clutch Master Cylinder Reservoir. Clean all dirt and debris from the clutch master cylinder cover (1). Remove the two clutch master cylinder cover screws (2) and remove the cover.

3. Verify the fluid level in the clutch master cylinder reservoir is at the FULL LEVEL mark at the top of the ledge on the rear inside wall of the reservoir. If the fluid level is low, add D.O.T. 4 HYDRAULIC BRAKE FLUID (Part No. 99953-99A) approved for clutch system use and available from a Harley-Davidson dealer.

   NOTE:

   Do not overfill the clutch master cylinder reservoir. As the clutch friction discs wear, the piston in the clutch cylinder will force fluid back into the reservoir which could cause fluid overflow.

CAUTION

D.O.T. 4 hydraulic brake fluid is used in the hydraulic clutch. Do not use other types of fluids as they are not compatible and could cause equipment damage. (00353a)

CAUTION

Do NOT allow dirt or debris to enter the master cylinder reservoir. Dirt or debris in the reservoir can cause improper operation and equipment damage. (00205b)

⚠CAUTION

Direct contact of D.O.T. 4 brake fluid with eyes can cause irritation. Avoid eye contact. In case of eye contact flush with large amounts of water and get medical attention. Swallowing large amounts of D.O.T. 4 brake fluid can cause digestive discomfort. If swallowed, obtain medical attention. Use in well ventilated area. KEEP OUT OF REACH OF CHILDREN. (00240a)

4. Inspect the clutch master cylinder cover gasket for rips, cuts, cracks, or other signs of damage. Replace the gasket if necessary. Carefully place the cover and cover gasket on the master cylinder reservoir and secure with the two cover screws. Tighten the screws to 6-8 in-lbs (0.68-0.90 Nm).

   NOTE:

   If the fluid level in the clutch master cylinder reservoir is correct but the clutch does not operate properly, refer to the VRSC Service Manual or see a Harley-Davidson dealer for service.

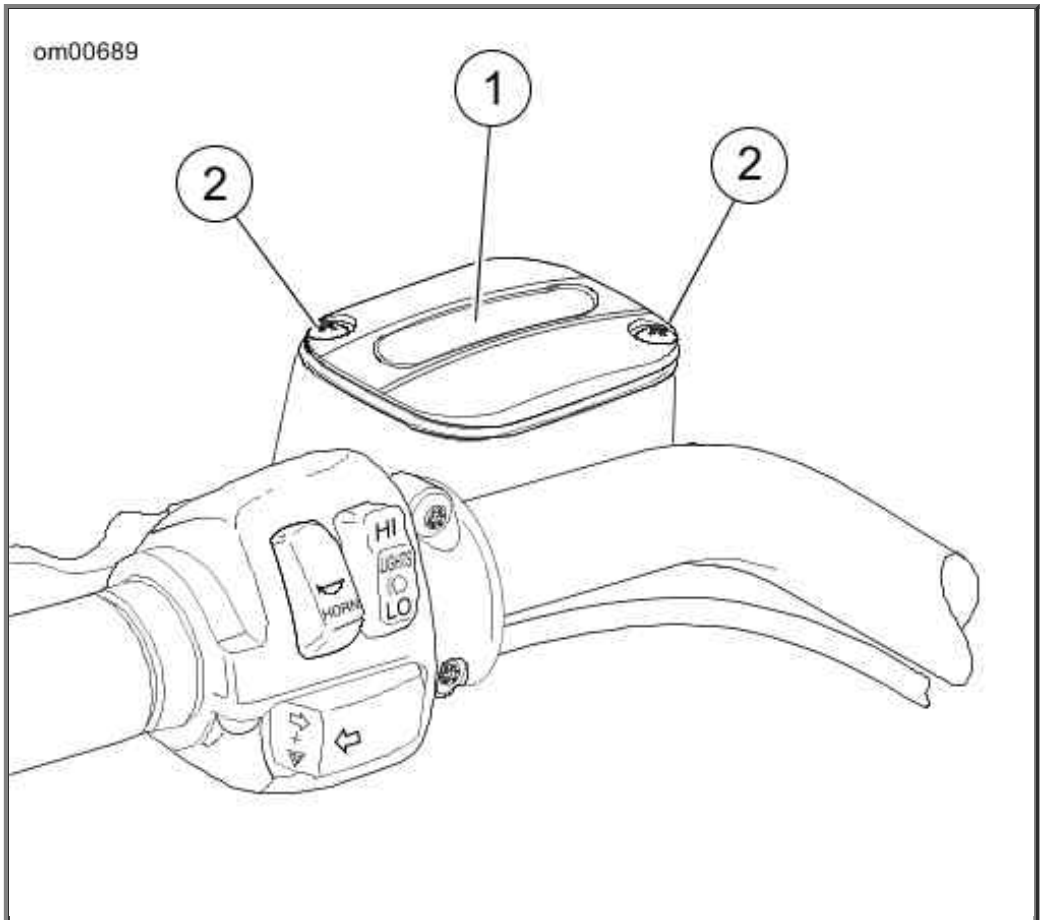

1. Cover
2. Screws (2)

Clutch Master Cylinder Reservoir

Front Fork Bearings

⚠WARNING

Adjustments to front fork bearings should be performed by a Harley-Davidson dealer. Improperly adjusted bearings can adversely affect handling and stability, which could result in death or serious injury. (00051a)

Refer to Regular Service Intervals: 2006 VRSC Models. Check front fork for proper bearing adjustment and lubricate bearings at proper intervals.

With motorcycle front end raised off the floor, be sure front fork turns freely without any binding or interference and that there is no appreciable front to rear fork shake indicating excessive bearing looseness. Steering head bearings should be adjusted according to Service Manual procedure, if necessary.

Rear Fork Pivot Shaft

Refer to Regular Service Intervals: 2006 VRSC Models. Check the tightness of the rear fork pivot shaft fastener at proper intervals.

NOTE:

For model specific information regarding the rear fork pivot shaft, refer to the appropriate Service

Manual or see a Harley-Davidson dealer.

Brakes: VRSC Models

⚠WARNING

Inspect brake pads for wear at service maintenance intervals. If you ride under adverse conditions (steep hills, heavy traffic, etc.), inspect more frequently. Excessively worn brake pads can lead to brake failure, which could result in death or serious injury. (00052a)

CAUTION

D.O.T. 4 brake fluid will damage painted and body panel surfaces it comes in contact with. Always use caution and protect surfaces from spills whenever brake work is performed. Failure to comply can result in cosmetic damage. (00239b)

NOTES:

- *Master cylinder cover specifies correct brake fluid.*
- *When adding or changing brake fluid, be sure to use only the type specified for your motorcycle.*
- *Use only Harley-Davidson D.O.T. 4 HYDRAULIC BRAKE FLUID (Part No. 99953-99A).*

Harley-Davidson has provided your new motorcycle with the optimum brake pad friction material available. It is selected to give the best performance possible under dry, wet and high operating temperature conditions. It exceeds all regulatory requirements currently in effect. However, during some braking conditions you may experience noise. This is normal for this friction material.

Refer to Regular Service Intervals: 2006 VRSC Models for brake system inspection intervals.

NOTE:

The rear brake master cylinder fluid level can also be viewed with a flashlight through back area of radiator cover trim making radiator cover removal unnecessary.

⚠WARNING

To prevent accidental vehicle start-up, which could cause death or serious injury, remove maxi-fuse before proceeding. (00251a)

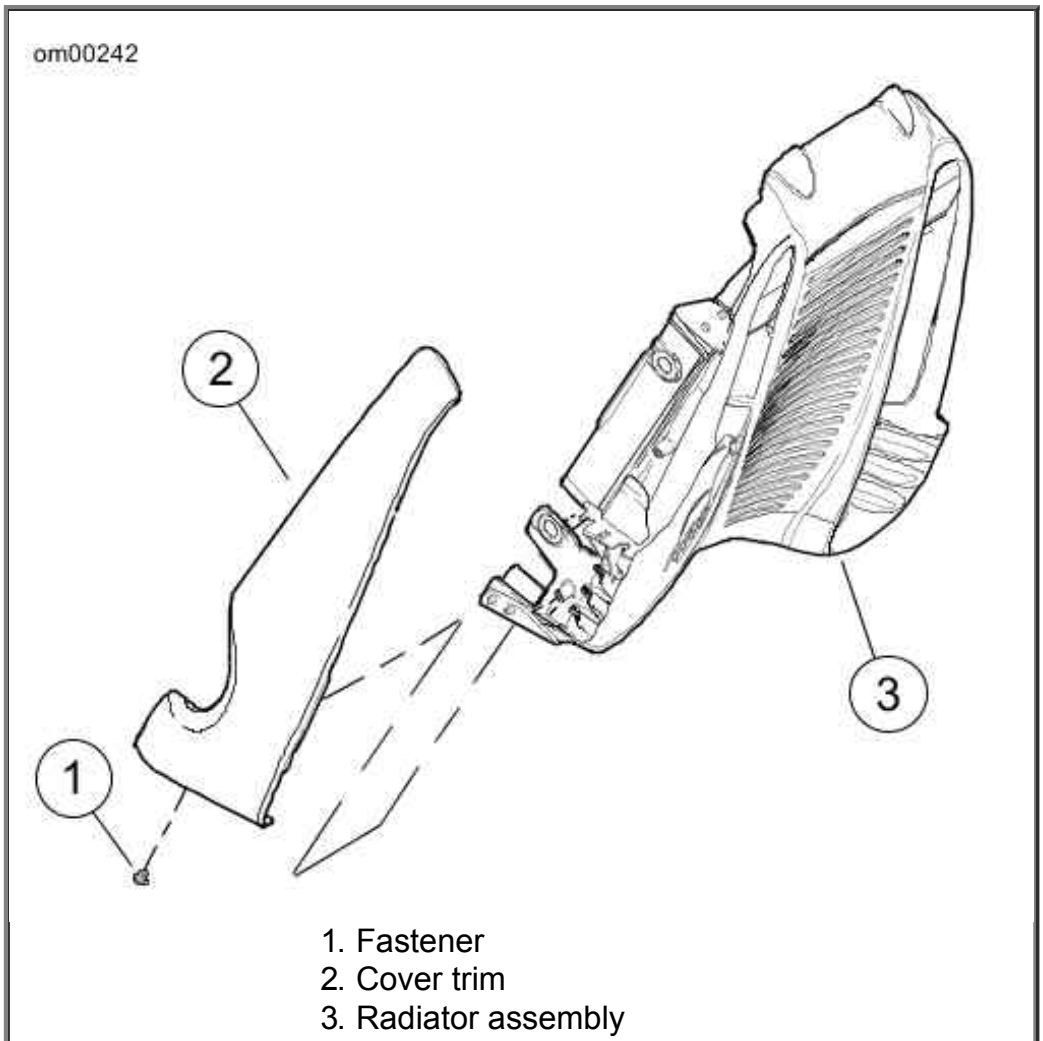

Removing Right Side Radiator Cover Trim

Rear Brake Master Cylinder Reservoir: VRSCR Model

1. Check the fluid level in the rear brake master cylinder reservoir.

    a. See Removing Right Side Radiator Cover Trim. Remove the fastener holding the

radiator cover side trim. Gently pull the bottom of the side trim outward, lift up on the trim to detach it from its upper attachment point and remove it from the motorcycle.

b. See Rear Brake Master Cylinder Reservoir: VRSCR Model. Verify the fluid level in the rear brake master cylinder reservoir is 1/2 in. (12.7 mm) below the top of the reservoir, as viewed through the translucent plastic case of the reservoir.

c. If the level is low, clean all dirt and debris from the reservoir cover. Remove the two reservoir cover screws and remove the cover. Add D.O.T. 4 HYDRAULIC BRAKE FLUID (Part No. 99953-99A) which is available from a Harley-Davidson dealer. Replace the reservoir cover and cover fasteners. Tighten the fasteners to 6-8 in-lbs (0.68-0.90 Nm).

d. Carefully reinstall the radiator cover side trim and fastener. Tighten the fastener to 26.5-35.3 in-lbs (3-4 Nm).

2. Check the fluid level in the front brake master cylinder reservoir.

a. Stand the motorcycle upright (not leaning on the jiffy stand) on a level surface, so the top of the front brake master cylinder is level.

b. See Handlebar Controls: VRSC Models. Clean all dirt and debris from the front brake master cylinder cover. Remove the two master cylinder cover screws and remove the cover.

c. Verify the fluid level in the front brake master cylinder reservoir is 1/5 in. (5 mm) below the reservoir top. If the fluid level is low, add D.O.T. 4 HYDRAULIC BRAKE FLUID (Part No. 99953-99A) which is available from a Harley-Davidson dealer.

d. Replace reservoir cover and cover fasteners. Tighten fasteners to 6-8 in-lbs (0.8-1.2 Nm).

NOTE:

Use only D.O.T. 4 HYDRAULIC BRAKE FLUID (Part No. 99953-99A) approved for brake system use and available from a Harley-Davidson dealer.

CAUTION

D.O.T. 4 brake fluid will damage painted and body panel surfaces it comes in contact with. Always use caution and protect surfaces from spills whenever brake work is performed. Failure to comply can result in cosmetic damage. (00239b)

⚠WARNING

Inspect brake pads for wear at service maintenance intervals. If you ride under adverse conditions (steep hills, heavy traffic, etc.), inspect more frequently. Excessively worn brake pads can lead to brake failure, which could result in death or serious injury. (00052a)

3. Check the brake discs for wear.

⚠WARNING

Always replace brake pads in complete sets for correct and safe brake operation. Improper brake operation could result in death or serious injury. (00111a)

⚠WARNING

Brakes are a critical safety component. Contact a Harley-Davidson dealer for brake repair or replacement. Improperly serviced brakes can adversely affect brake performance, which could result in death or serious injury. (00054a)

4. See Brake Friction Material. Visual inspection of brake pads can be made without removing the caliper by viewing the lower area of each caliper with the aid of a flashlight. Replace the brake pads if the brake friction material is 0.016 in. (0.4 mm) or less above the backing plate.

⚠WARNING

Perform routine scheduled brake maintenance. Lack of maintenance at recommended intervals can adversely affect brake performance, which could result in death or serious injury. (00055a)

NOTES:

- *If the brake pad friction material is 0.016 in. (0.4 mm) thick or less, the pads must be replaced immediately.*
- *Always replace brake pads in pairs.*

The rear brake outer pad on all models can be measured from the caliper bracket side using a thin plastic 6 in. (152 mm.) rule.

Place the rule against the brake disc through the space alongside the caliper. If friction material measures less than 0.016 in. (0.4 mm), replace both brake pads immediately.

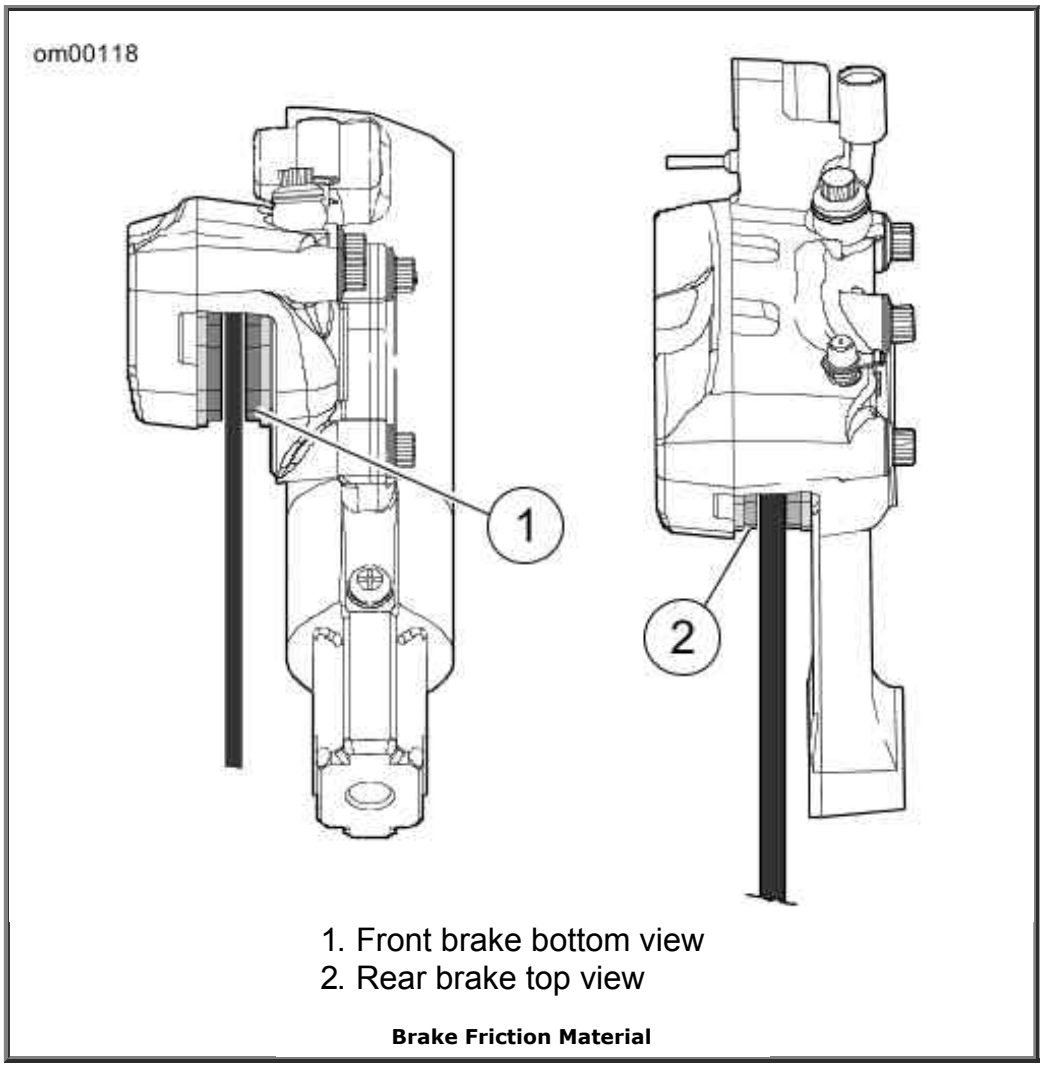

1. Front brake bottom view
2. Rear brake top view

Brake Friction Material

Tires: VRSC Models

⚠WARNING

Do not inflate tire beyond maximum pressure as specified on sidewall. Over inflated tires can blow out, which could result in death or serious injury. (00027a)

- Refer to Tire Pressures: 2006 VRSC Models. Be sure to keep tires properly inflated.
- Follow the data for correct cold tire inflation pressures.
- Check before riding when tires are cold.
- Do not over-inflate tires.

⚠WARNING

Match tires, tubes, air valves and caps to the correct wheel rim. Contact a Harley-Davidson dealer. Mismatching can result in damage to the tire bead, allow tire slippage on the rim or cause tire failure, which could result in death or serious injury. (00023a)

- Check inflation pressure and inspect the tread for punctures, cuts breaks, etc., at least weekly if in daily use or before each trip if used occasionally.

NOTE:

The VRSC features performance-oriented tires. These tires require more frequent inspection and may require more frequent replacement than Harley-Davidson touring model tires.

Refer to Tire Sizes: 2006 VRSC Models. Same original equipment tires should be used. Other tires may not fit correctly, could adversely affect handling and may be hazardous to use.

⚠WARNING

Tires are a critical safety component. Contact a Harley-Davidson dealer for tire repair or replacement. Improper tire service can adversely affect stability and handling, which could result in death or serious injury. (00057a)

⚠WARNING

Replace punctured or damaged tires. In some cases, small punctures in the tread area may be repaired from within the demounted tire by a Harley-Davidson dealer. Speed should NOT exceed 50 mph (80 km/h) for the first 24 hours after repair, and the repaired tire should NEVER be used over 80 mph (130 km/h). Failure to follow this warning could result in death or serious injury. (00015a)

⚠WARNING

Striking an object, such as a curb, can cause internal tire damage. If an object is struck, remove and inspect both the inside and outside of the tire. A damaged tire can adversely affect stability and handling, which could result in death or serious injury. (00058a)

Tire Replacement

Inspection

⚠WARNING

Harley-Davidson tires are equipped with wear bars that run horizontally across the tread. When wear bars become visible and only 1/32 in. (0.8 mm) tread depth remains, replace tire immediately. Using a worn tire can adversely affect stability and handling, which could result in death or serious injury. Use only Dunlop Harley-Davidson replacement tires. (00090a)

See Tire Sidewall: VRSC Models. Arrows on tire sidewalls pinpoint location of wear bar indicators.

Tread wear indicator bars will appear on tire tread surfaces when 1/32 in. (0.8 mm) or less of tire

tread remains. See Tread Surface Wear Bar: VRSC Models. Always replace tires before the tread wear indicator bars appear.

When To Replace Tires

New tires are needed if any of the following conditions exist:

1. Tread wear indicator bars become visible on the tread surfaces.
2. Tire cords or fabric become visible through cracked sidewalls, snags or deep cuts.
3. A bump, bulge or split in the tire.
4. Puncture, cut or other damage to the tire that cannot be repaired.

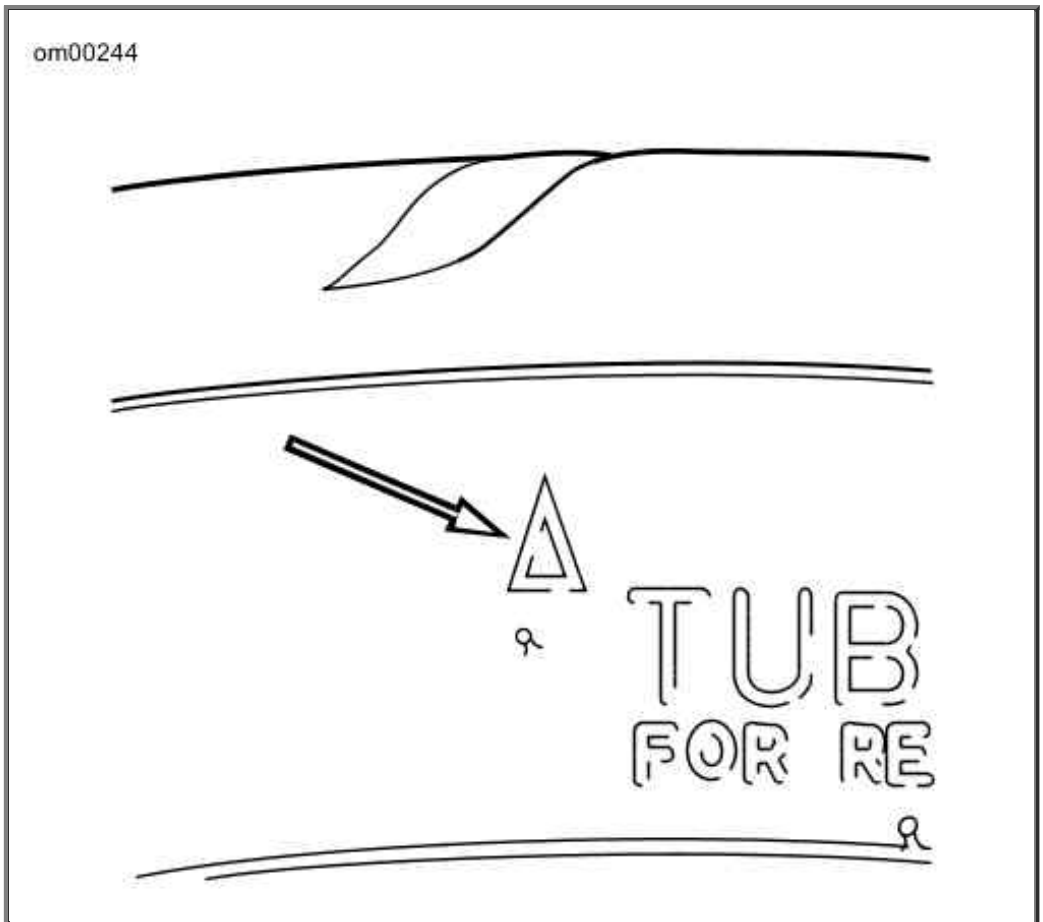

Tire Sidewall: VRSC Models

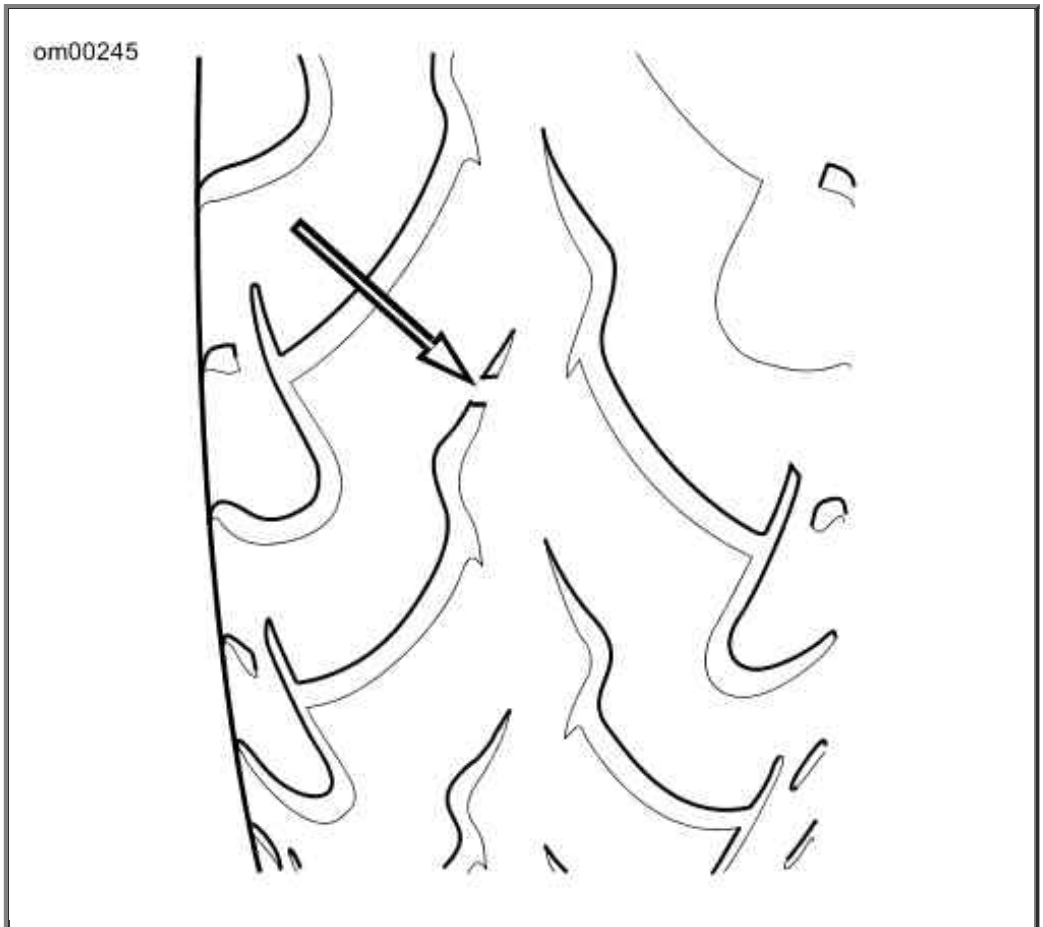

Tread Surface Wear Bar: VRSC Models

Spark Plugs/Coils: VRSC Models

Refer to Regular Service Intervals: 2006 VRSC Models. Check the spark plugs at proper mileage intervals.

⚠CAUTION

Do NOT pull on any electrical wires. Pulling on electrical wires may damage the internal conductor causing high resistance, which may result in minor or moderate injury. (00168a)

Before installing spark plugs, the gap should be checked and adjusted if necessary to 0.035 in. (0.89 mm).

Be sure your motorcycle has the correct spark plug. Use a **10R12A** spark plug.

Spark plugs must be tightened to the torque specified for proper heat transfer. Tighten spark plugs to 17 ft-lbs (23 Nm) per spark plug.

NOTES:

- *If a torque wrench is not available, tighten the spark plugs finger tight; then tighten an additional one quarter turn with a spark plug wrench.*
- *The VRSC is equipped with plug-top coils. To inspect the spark plugs, the coils must be removed. Consult the VRSC Service Manual for the proper service procedure.*

Shock Absorbers

Refer to Regular Service Intervals: 2006 VRSC Models. Inspect shock absorbers and rubber bushings for leaks and bushing deterioration at proper intervals.

Ignition

The engine in your motorcycle has been designed specifically to achieve optimum fuel economy within exhaust emission controls. Factory programmed ignition characteristics provide maximum engine performance and driveability.

NOTE:

The ignition control unit monitors engine load. In certain transient load conditions (as the throttle is opened), the timing changes from normal to fully advanced. At this point, the operator can sometimes hear a noise that is similar to pre-ignition detonation.

This noise should not be confused with detonation which can be stopped by the use of a higher grade fuel. It is caused by the instant pressure rise in the combustion chambers as the spark advances rapidly. This noise doesn't affect engine performance.

Air Cleaner: VRSC Models

Refer to Regular Service Intervals: 2006 VRSC Models. The engine air cleaner is a paper/wire mesh air filter element. Inspect the filter element. Inspect more often under dusty conditions. Remove the air cleaner as follows:

1. Open seat.
2. See Airbox Cover: VRSCR Model. Remove the airbox cover by turning the bailhead fastener 1/4 turn counterclockwise. Pull the airbox cover away from the front locating holes.
3. See Airbox Top: VRSC Models. Remove electrical connector (3) by pushing down on bail wire to unlock. The airbox top is retained by eight clips, three per side, one at the rear and one in the front under the snorkel. Release the clips and remove the airbox top.

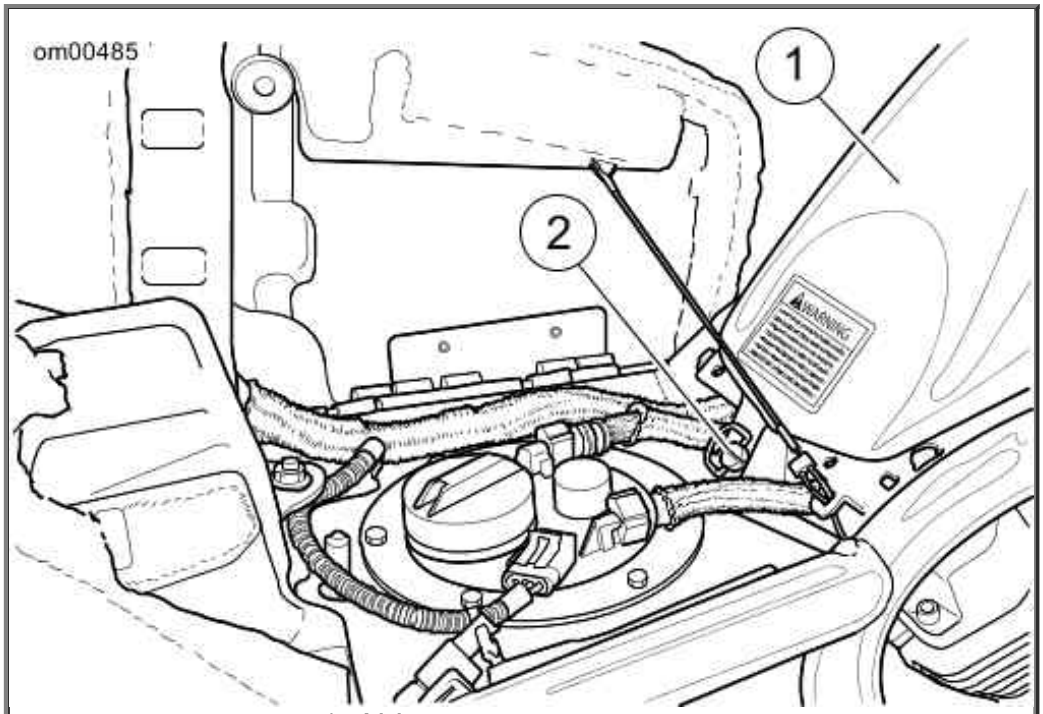

1. Airbox cover
2. Bailhead fasteners

Airbox Cover: VRSCR Model

1. Airbox top
2. Mounting clips
3. Electrical connector

Airbox Top: VRSC Models

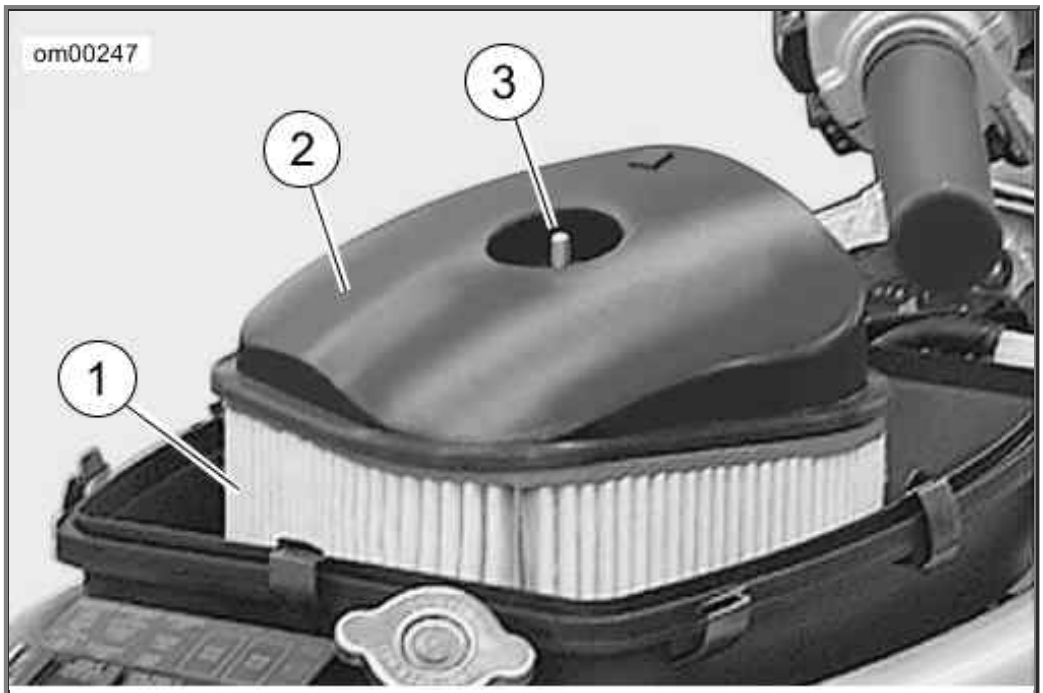

1. Air filter element
2. Air cleaner cap
3. Wing nut

Air Cleaner Assembly: VRSC Models

4. See Air Cleaner Assembly: VRSC Models. Unscrew the wing nut securing the air cleaner cap. Remove the air cleaner cap and paper/wire mesh air filter element.

CAUTION

To prevent objects from falling down the velocity stacks, temporarily reinstall the air cleaner cap. (00208a)

5. Wash the paper/wire mesh air filter element in luke warm water with a mild detergent. Rinse thoroughly.

⚠WARNING

Compressed air can pierce the skin and flying debris from compressed air could cause serious eye injury. Wear safety glasses when working with compressed air. Never use your hand to check for air leaks or to determine air flow rates. (00061a)

6. Allow the filter element to either air dry or blow it dry from the inside with low pressure air.

7. Hold the filter element up to a strong light source. If light is uniformly visible through the element, it is sufficiently clean. Replace the filter element if it is damaged or if the filter media cannot be adequately cleaned.

NOTE:

Do not use air cleaner filter oil on Harley-Davidson paper/wire mesh air filter elements.

8. Remove the air cleaner cap. Place the air filter element in the bottom tray of the airbox.

Install the air cleaner cap over the air filter element and secure with the wing nut.

CAUTION

Install air filter before running engine. Failure to do so can draw debris into the engine and could result in engine damage. (00207a)

9. Position the airbox top over the air filter assembly and fasten the clips along each side and the clip at the rear.

10. See Front Airbox Clip. The front clip under the snorkel is attached to the airbox top. Fasten the clip over the lip on the airbox bottom.

11. See Airbox Cover: VRSCR Model. Position the airbox cover with the locating pins in the holes on the frame tabs.

12. Turn the bailhead fastener 1/4 turn clockwise to secure the airbox cover to the motorcycle.

13. Close seat.

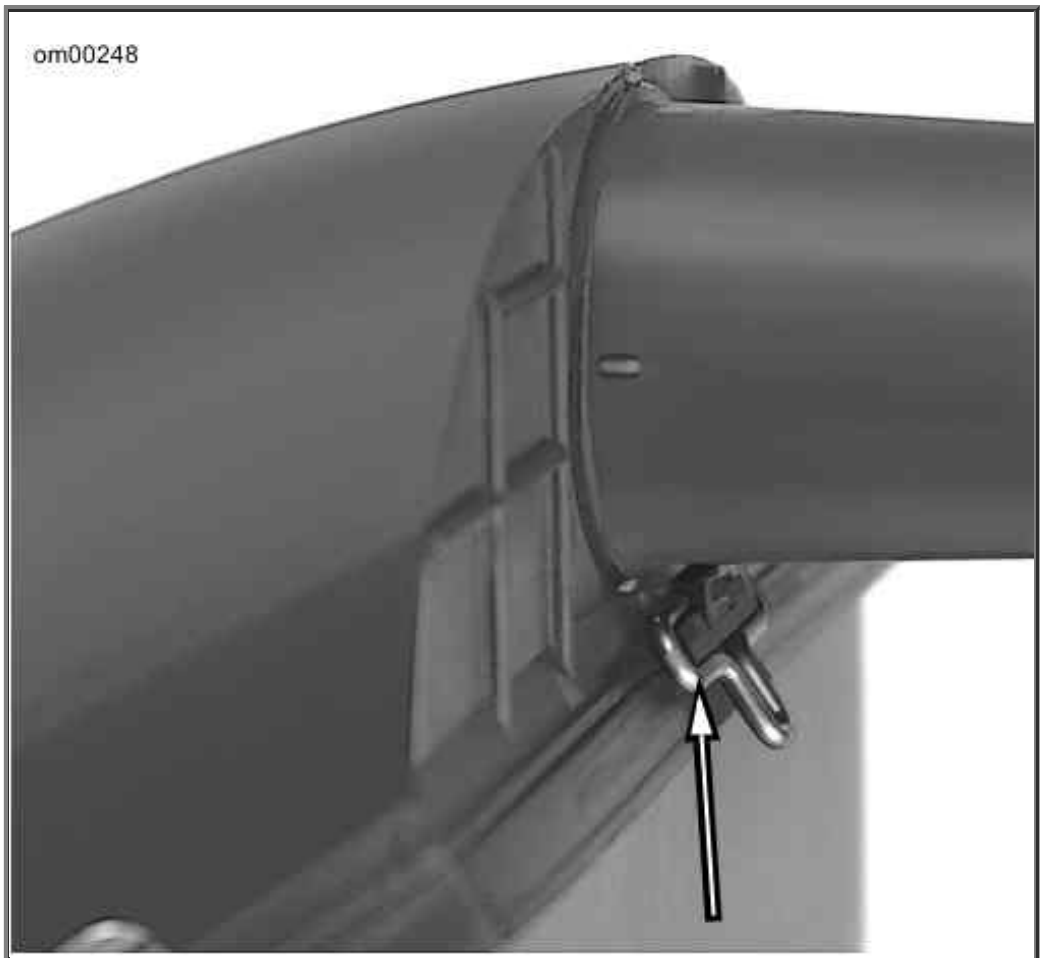

Front Airbox Clip

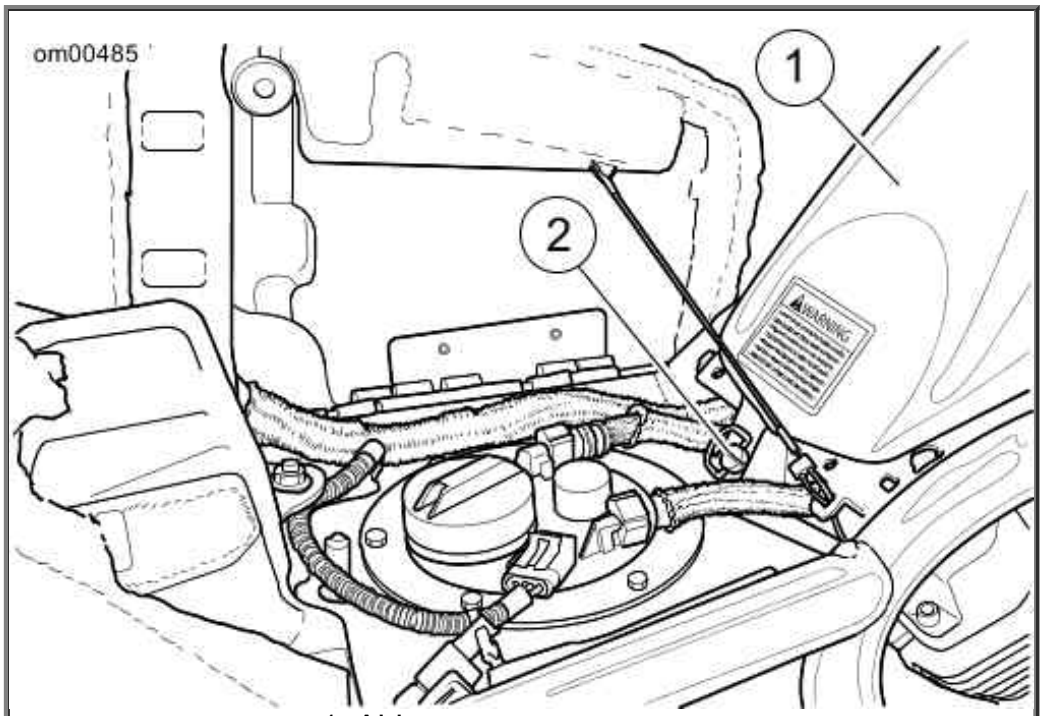

1. Airbox cover
2. Bailhead fasteners

Airbox Cover: VRSCR Model

Headlamp

See Headlamp: VRSC Models. The headlamp assembly uses a replaceable quartz halogen bulb.

NOTE:

Refer to Bulb Chart: 2006 VRSC Models and see a service manual for more details.

CAUTION

When replacement is required, use only the specified sealed beam unit or bulb, available from a Harley-Davidson dealer. An improper wattage sealed beam or bulb, can cause charging system problems. (00209a)

CAUTION

Never touch the quartz bulb. Fingerprints will etch the glass and decrease bulb life. Grab the bulb with paper or a clean, dry cloth. Failure to do so could result in bulb damage. (00210a)

⚠WARNING

Handle bulb carefully and wear eye protection. Bulb contains Halogen gas under pressure, which, if not handled carefully, could cause serious eye injury. (00062a)

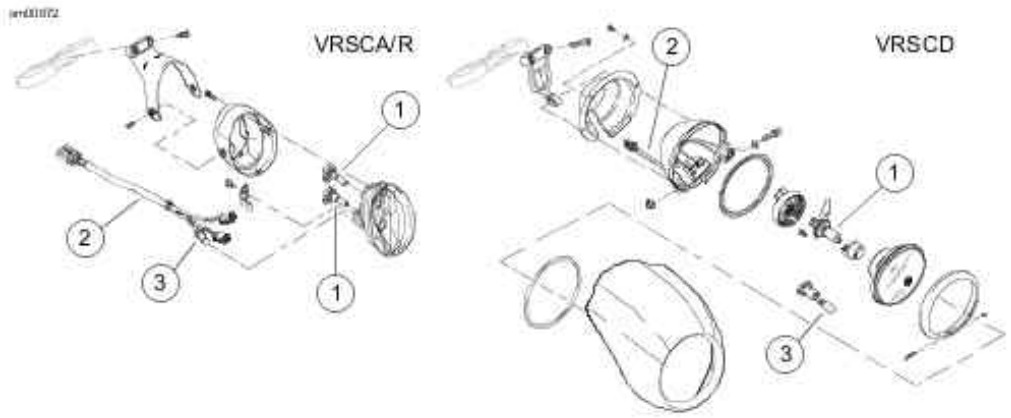

1. Headlamp bulbs
2. Position lamp harness (international only)
3. Position bulb (international only)

Headlamp: VRSC Models

Headlamp Alignment: VRSC Models

⚠WARNING

The automatic-on headlamp feature provides increased visibility of the rider to other motorists. Be sure headlamp is on at all times. Poor visibility of rider to other motorists can result in death or serious injury. (00030b)

Check headlamp for proper height and lateral alignment:

- When the new owner takes delivery of the motorcycle.
- When there is a change in load (adding luggage, etc.).

1. Refer to Tire Pressures: 2006 VRSC Models. Verify correct front and rear tire pressure.
2. Place motorcycle on level floor (or pavement) in an area with minimum light.
3. See Headlamp Alignment: VRSC Models. Position motorcycle 7.6 m (25 ft) away from a screen or wall. Measure the vertical distance from center of headlamp to floor, and draw a horizontal line (2) 35 in. (0.9 m) on screen or wall at same height above floor.

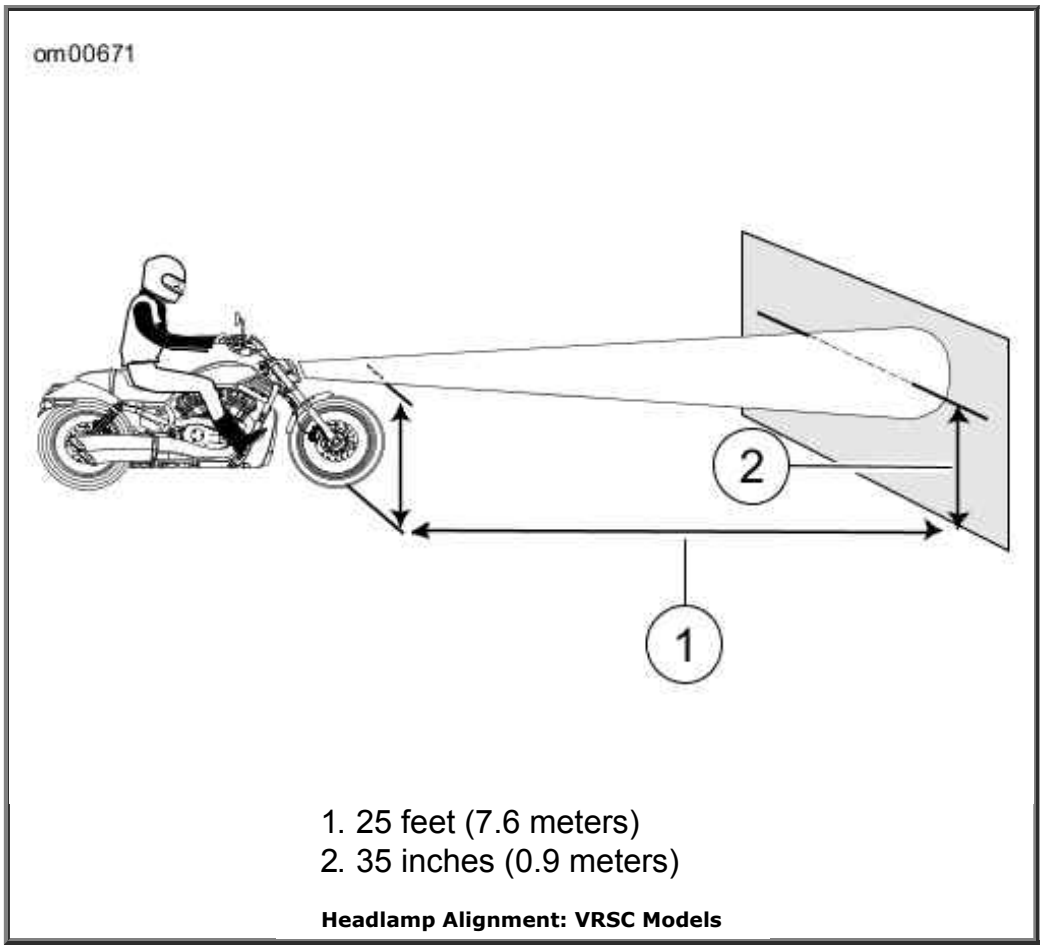

1. 25 feet (7.6 meters)
2. 35 inches (0.9 meters)

Headlamp Alignment: VRSC Models

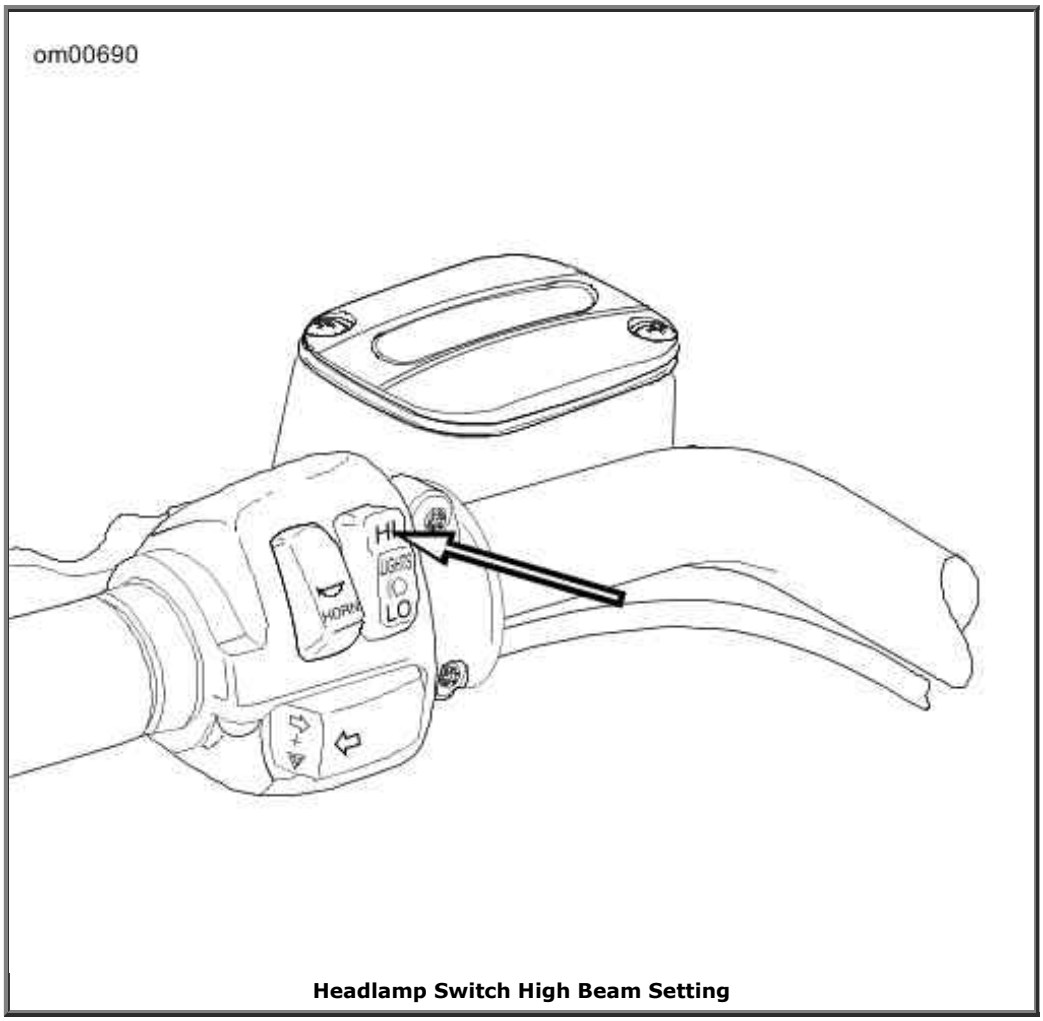

Headlamp Switch High Beam Setting

4. Load vehicle with rider, passenger (if normally present) and any cargo. Weight will compress vehicle suspension slightly.

5. Stand motorcycle upright with both tires resting on floor and with front wheel held in straight alignment (directly forward).

6. See Headlamp Alignment: VRSC Models. Turn ignition switch ON. Set handlebar headlamp switch to HIGH beam position.

7. Check lamp beam for alignment.

8. See Headlamp Aligment Fastener: VRSC Models or Headlamp Alignment Fastener: VRSCD Models. If adjustment is required:

    a. Loosen left and right fasteners.

    b. Move headlamp assembly to adjust vertical alignment.

    c. Tighten fasteners.

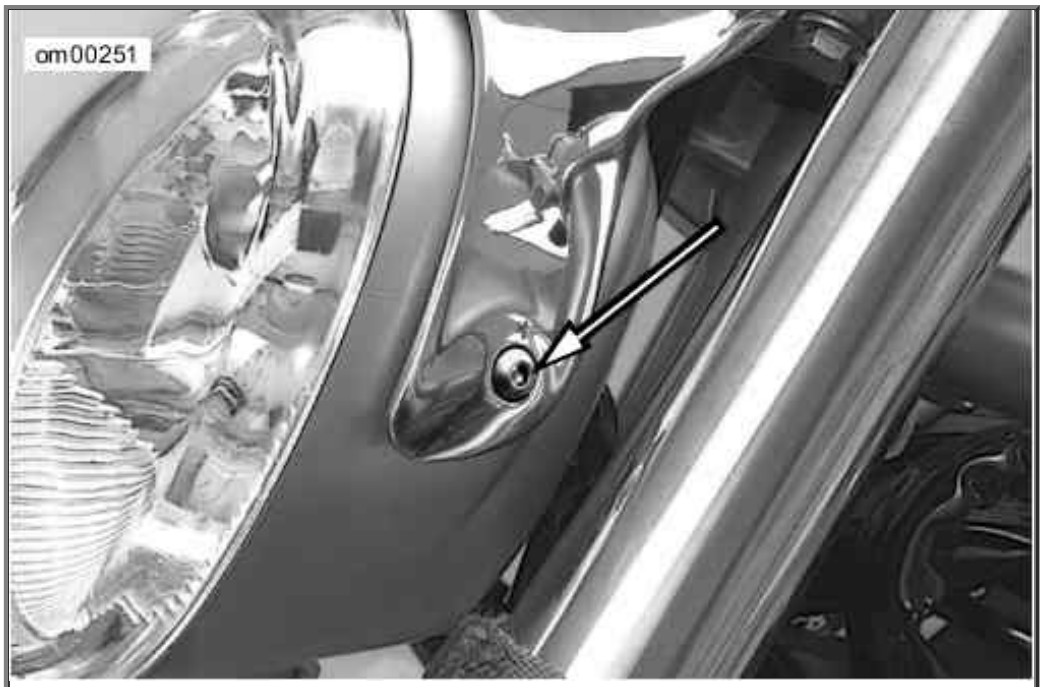

Headlamp Aligment Fastener: VRSC Models

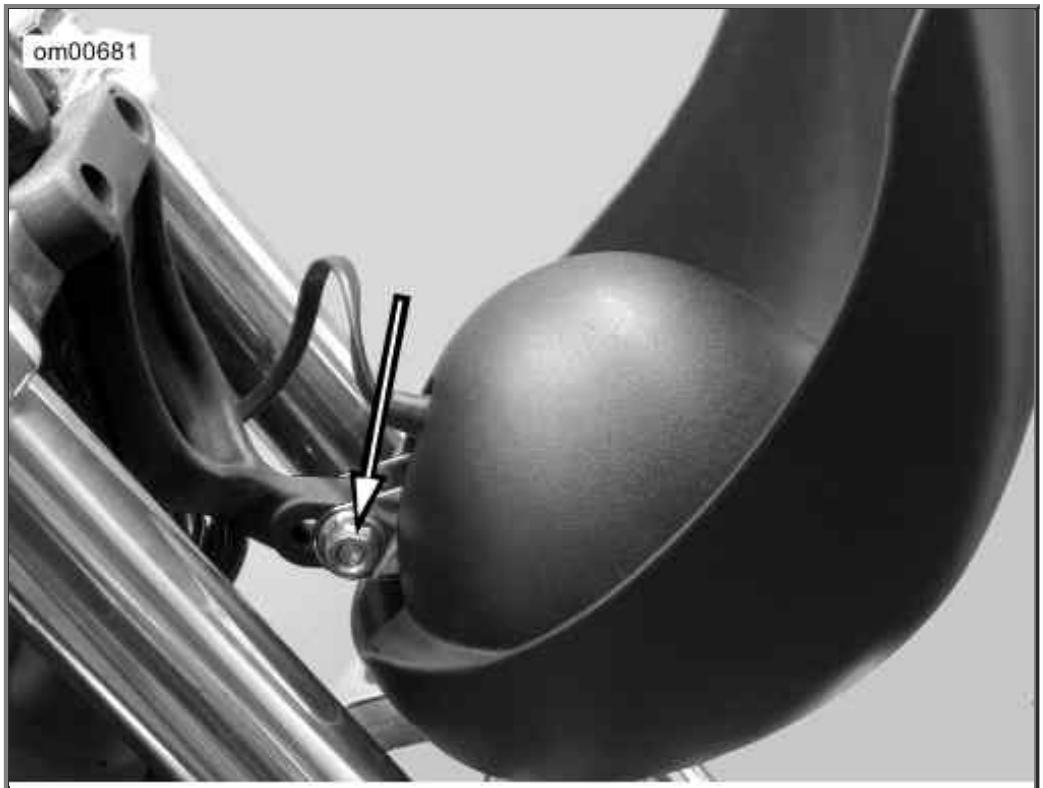

Headlamp Alignment Fastener: VRSCD Models

Turn Signal Bulbs: Bullet Style

Replacement

1. See Lens Cap Notch. To access the front or rear turn signal bulbs for replacement, locate a notch on the turn signal lens cap.
2. Insert a coin in the lens cap notch, and carefully twist until the lens cap pops out of the lamp housing.
3. Push in and twist the lamp bulb counterclockwise and pull lamp bulb out of the socket.
4. Orient index pins on **new** lamp bulb with pin guides inside bulb socket.
5. Push lamp bulb in and turn clockwise to lock in place.
6. Snap lens cap back into the lamp holder.

Alignment

Refer to service manual for alignment procedure.

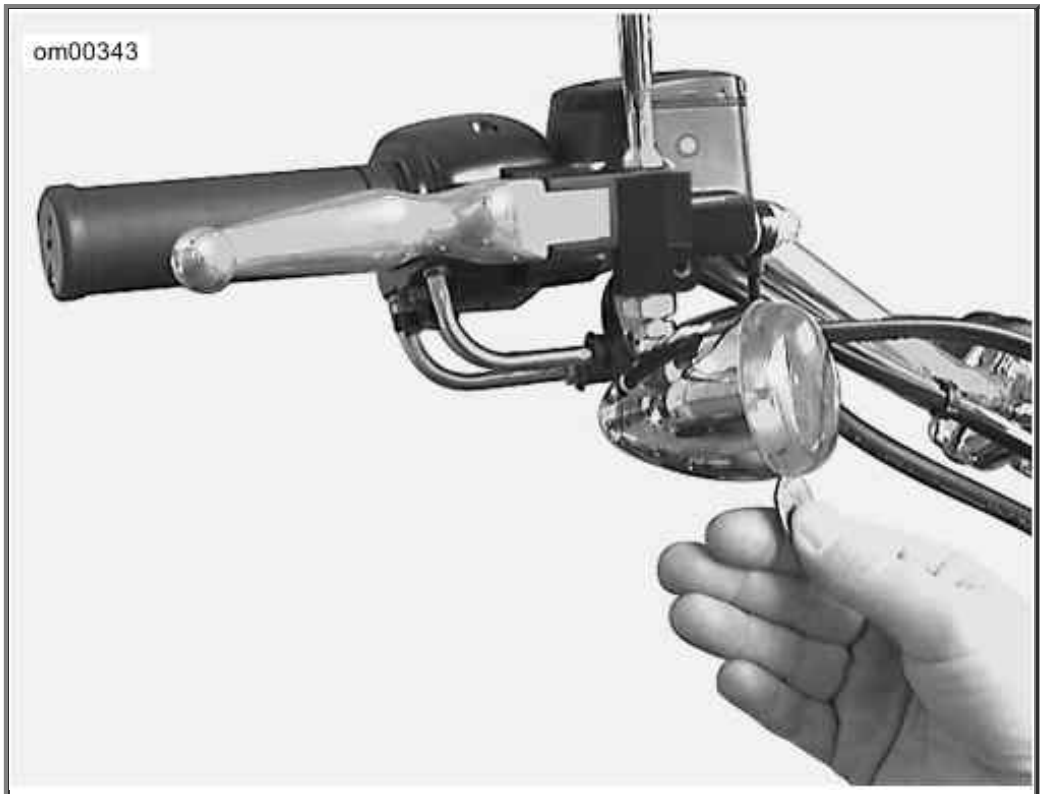

Lens Cap Notch

Alternator/Voltage Regulator

Charging Rate

The alternator output is controlled and changed to direct current by the voltage regulator.

- The voltage regulator increases charging rate when battery is low or lamps are lit.
- The voltage regulator decreases charging rate when battery charge is up.

CAUTION

It is possible to overload your motorcycle's charging system by adding too many electrical accessories. If your combined electrical accessories operating at any one time consume more electrical current than your vehicle's charging system can produce, the electrical consumption can discharge the battery and cause vehicle electrical system damage. See a Harley-Davidson dealer for advice about the amount of current consumed by additional electrical accessories, or for necessary wiring changes. (00211b)

NOTES:

- *This unit requires no interval attention. If any electrical system trouble is experienced that might be traceable to the alternator or voltage regulator, the motorcycle should be taken to a Harley-Davidson dealer who has the necessary electrical testing equipment to give the required attention.*
- *For model specific information regarding the voltage regulator, refer to the appropriate Service Manual or see a Harley-Davidson dealer.*

Type

Your motorcycle uses a permanently sealed, maintenance-free, lead/calcium and sulfuric acid battery. All batteries are shipped precharged and ready to be put into service. Do not attempt to open the battery for any reason.

Antidotes for Battery Acid

CONTACT	TREATMENT
External	Flush with water.
Internal	Drink large quantities of milk or water, followed by milk of magnesia, vegetable oil or beaten eggs. Get immediate medical attention.
Eyes	Flush with water. Get immediate medical attention.

⚠WARNING

Batteries contain sulfuric acid, which could cause severe burns to eyes and skin. Wear a protective face shield, rubberized gloves and protective clothing when working with batteries. KEEP BATTERIES AWAY FROM CHILDREN. (00063a)

⚠WARNING

Explosive hydrogen gas, which escapes during charging, could cause death or serious injury. Charge battery in a well-ventilated area. Keep open flames, electrical sparks and smoking materials away from battery at all times. KEEP BATTERIES AWAY FROM CHILDREN. (00065a)

⚠WARNING

Batteries, battery posts, terminals and related accessories contain lead and lead compounds, and other chemicals known to the State of California to cause cancer and birth defects or other reproductive harm. Wash hands after handling. (00019d)

⚠WARNING

Never remove warning label attached to top of battery. Failure to read and understand all precautions contained

in warning, could result in death or serious injury. (00064a)

1. Contents are corrosive
2. Wear safety glasses
3. Contents are explosive
4. Keep flames away
5. Read instructions
6. Keep away from children

Battery Warning Label

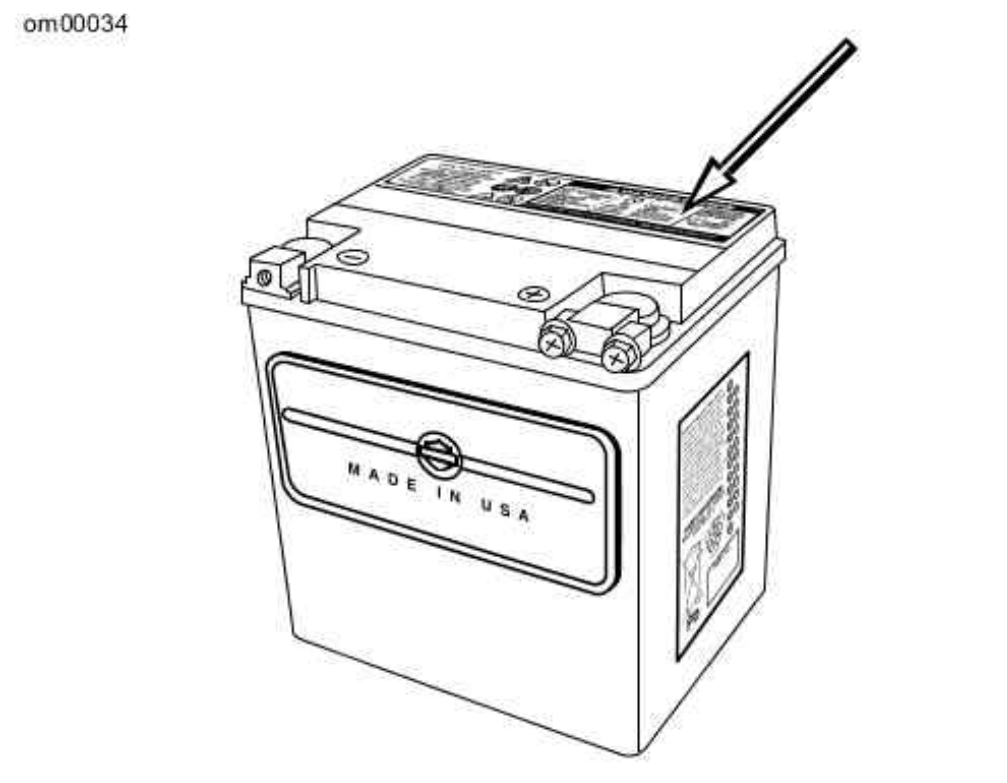

Battery Warning Label Location

Voltmeter Test

Refer to Voltmeter Test. The voltmeter test provides a general indicator of battery condition. Check the voltage of the battery to verify that it is in a 100 percent fully charged condition. If the open circuit (disconnected) voltage reading is below 12.6V, charge the battery and then re-check the voltage after the battery has set for one to two hours.

Voltmeter Test

READING IN VOLTS	PERCENT OF CHARGE
12.7	100
12.6	75
12.3	50
12.0	25
11.8	0

Cleaning and Inspection

Battery top must be clean and dry. Dirt and electrolyte on top of the battery can cause battery to self-discharge.

1. Clean battery top with a solution of baking soda (sodium bicarbonate) and water. Use 5 teaspoons baking soda per quart or liter of water.
2. When the solution stops bubbling, rinse off the battery with clean water.
3. Clean cable connectors and battery terminals using a wire brush or fine grit sandpaper to remove any oxidation.
4. Inspect and clean the battery screws, clamps and cables. Check for breakage, loose connections and corrosion.
5. Check the battery posts for melting or damage caused by overtightening.
6. Inspect the battery for discoloration, a raised top or a warped or distorted case. This might indicate that the battery has been frozen, overheated or overcharged.
7. Inspect the battery case for cracks or leaks.

Charging

Never charge a battery without first reviewing the instructions for the charger being used. In addition to the manufacturer's instructions, follow these general safety precautions.

Charge the battery if any of the following conditions exist:

- Vehicle lamps appear dim.
- Electric starter sounds weak.
- Battery has not been used for an extended period of time.

⚠WARNING

Explosive hydrogen gas, which escapes during charging, could cause death or serious injury. Charge battery in a well-ventilated area. Keep open flames, electrical sparks and smoking materials away from battery at all times.

KEEP BATTERIES AWAY FROM CHILDREN. (00065a)

⚠WARNING

Batteries contain sulfuric acid, which could cause severe burns to eyes and skin. Wear a protective face shield, rubberized gloves and protective clothing when working with batteries. KEEP BATTERIES AWAY FROM CHILDREN. (00063a)

1. Perform a voltmeter test to determine the state of charge. If battery needs to be charged, proceed to the next step.

CAUTION

Remove battery from motorcycle before charging. Electrolyte leakage will damage motorcycle parts. (00213a)

2. Remove the battery from the motorcycle. See Battery: VRSC Models.
3. Place the battery on a level surface.

⚠WARNING

Unplug or turn OFF battery charger before connecting charger cables to battery. Connecting cables with charger ON can cause a spark and battery explosion, which could result in death or serious injury. (00066a)

⚠WARNING

Connect positive (+) battery cable first. If positive (+) cable should contact ground with negative (-) cable connected, the resulting sparks can cause a battery explosion, which could result in death or serious injury. (00068a)

⚠WARNING

Disconnect negative (-) battery cable first. If positive (+) cable should contact ground with negative (-) cable connected, the resulting sparks can cause a battery explosion, which could result in death or serious injury. (00049a)

CAUTION

Do not reverse the charger connections described in the following steps or the charging system of the motorcycle could be damaged. (00214a)

NOTES:

- *The figures listed in the Amp-hour table assume that the battery is charging at room temperature. If warmer than room temperature, use a slightly shorter charging time. If colder, use a slightly longer charging time.*
- *The use of constant current chargers to charge sealed maintenance free batteries is not recommended. Any overcharge will cause dry-out and premature battery failure. If a constant current charger is the only type available, do not exceed the charge times listed in 12 Amp-Hour Battery Charging Rates and Times and do not continue charging the battery if it gets hot. When charging, never exceed 15 volts.*

4. Connect the red battery charger lead to positive (+) terminal of the battery.

5. Connect the black battery charger lead to negative (-) terminal of the battery.

   NOTE:

   If the battery is still in the vehicle, connect the negative lead to the chassis ground. Make sure that the ignition and all electrical accessories are turned off.

6. Step away from the battery and turn on the charger.

⚠WARNING

Unplug or turn OFF battery charger before disconnecting charger cables from battery. Disconnecting clamps with charger ON can cause a spark and battery explosion, which could result in death or serious injury. (00067a)

7. After the battery is fully charged, turn OFF the charger and disconnect the black battery charger lead to the negative (-) terminal of the battery.

8. Disconnect the red battery charger lead to the positive (+) terminal of the battery.

9. Mark the charging date on the battery.

12 Amp-Hour Battery Charging Rates and Times

READING (VOLTS)	PERCENT CHARGE	3 AMP CHARGER	6 AMP CHARGER	10 AMP CHARGER	20 AMP CHARGER
12.7	100	N/A	N/A	N/A	N/A
12.6	75	1 hour 10 minutes	34 minutes	20 minutes	10 minutes
12.3	50	2 hours 20 minutes	70 minutes	40 minutes	20 minutes
12.0	25	3 hours 20 minutes	1 hour 40 minutes	1 hour	30 minutes
11.8	0	4 hours 30 minutes	2 hours 14 minutes	1 hour 20 minutes	40 minutes

Storage

CAUTION

Turn engine over a few times to be sure there is no oil in

Turn engine over a few times to be sure there is no oil in the crankcase and that all oil has been pumped back into the oil tank. Stop engine and re-check oil level. Failure to do so can result in engine damage. (00071a)

CAUTION

Do not allow battery to completely discharge. The electrolyte in a discharged battery will freeze. The more discharged a battery is, the more easily it can freeze and crack the battery case. (00218a)

If the motorcycle will not be operated for several months, such as during the winter season, remove the battery from the motorcycle and fully charge.

If the motorcycle is to be stored with the battery installed, it will be necessary to connect a battery tender to maintain charge. See an authorized dealer for more information.

Self-discharge is a normal condition and occurs continuously. The rate of self-discharge depends on the ambient temperature and the battery's state of charge.

- Batteries discharge at a faster rate at higher ambient temperatures.
- To reduce the self-discharge rate, store battery in a cool (not freezing), dry place.
- Charge the battery every month if stored at temperatures below 60° F. (16° C).
- Charge the battery more frequently if stored in a warm area above 60° F. (16° C).

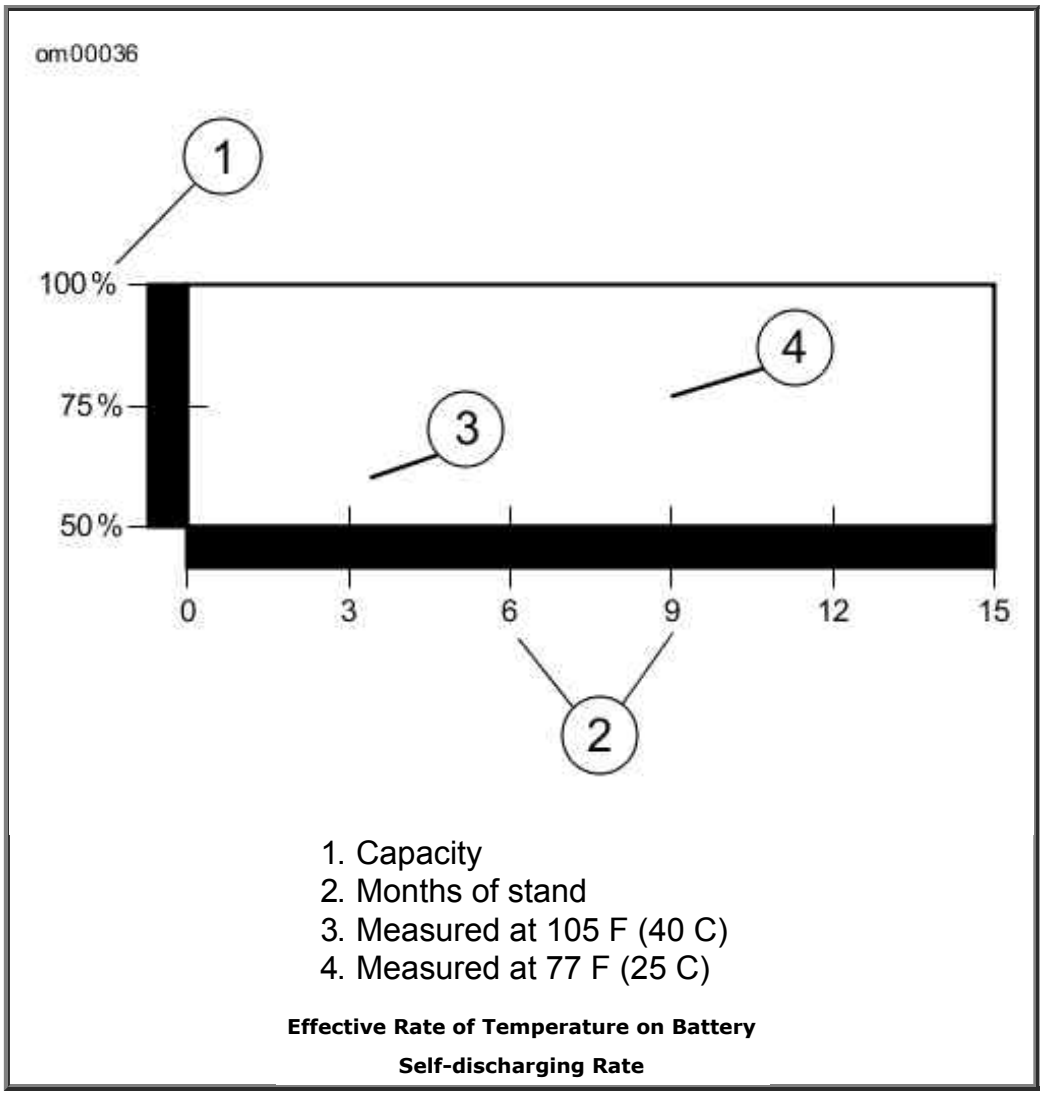

Battery: VRSC Models

Disconnection and Removal

Before you can inspect or disconnect the battery you must read the section containing information about air cleaner removal.

1. Remove the air cleaner. See Air Cleaner: VRSC Models.
2. See Removing Rear Breather Hose Clamp. Compress hose clamp with a needle nose pliers and remove rear breather hose from cam cover.
3. See Velocity Stacks. Slide the o-ring (4) up each velocity stack (1) body to reveal the three retaining fasteners (5). Unscrew the fasteners and lift off the velocity stacks.

CAUTION

Cover the injector intakes with duct tape to prevent objects from falling down the injector bore. Do NOT use shop cloths or objects that could damage the injector butterflies. (00212a)

4. Carefully lift up the airbox bottom tray. Two breather hoses are attached to the underside of the airbox bottom tray. The front breather hose is a press-fit on a brass tube and will disconnect. The rear breather hose was disconnected in Step 2.

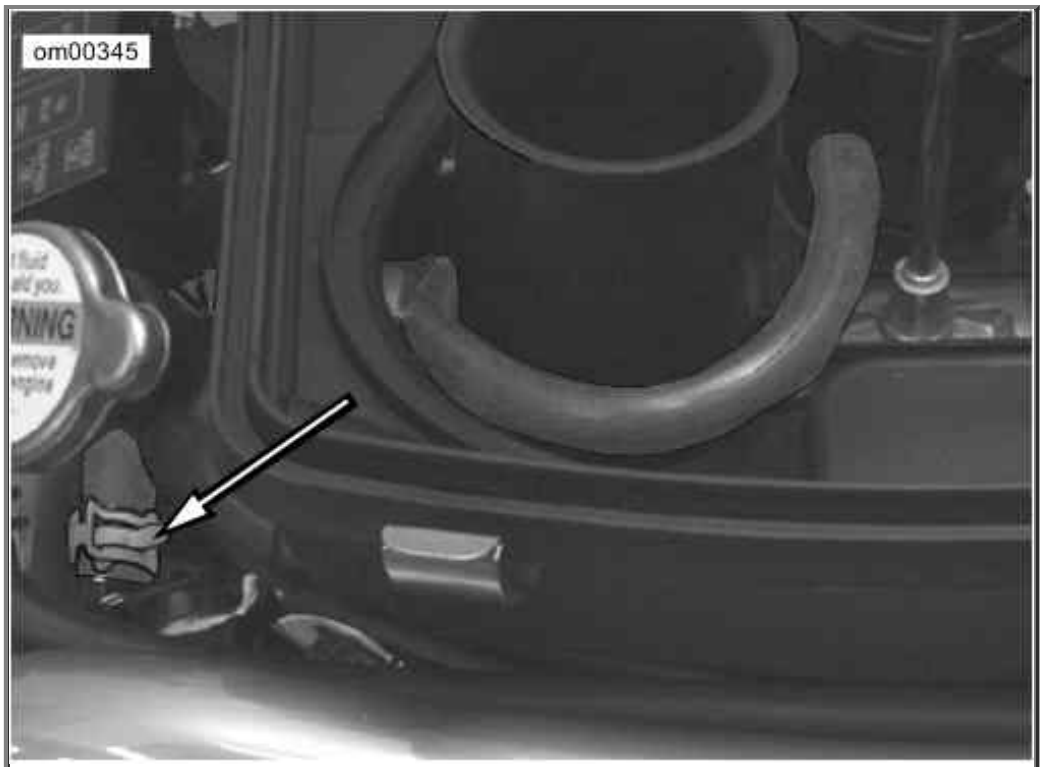

Removing Rear Breather Hose Clamp

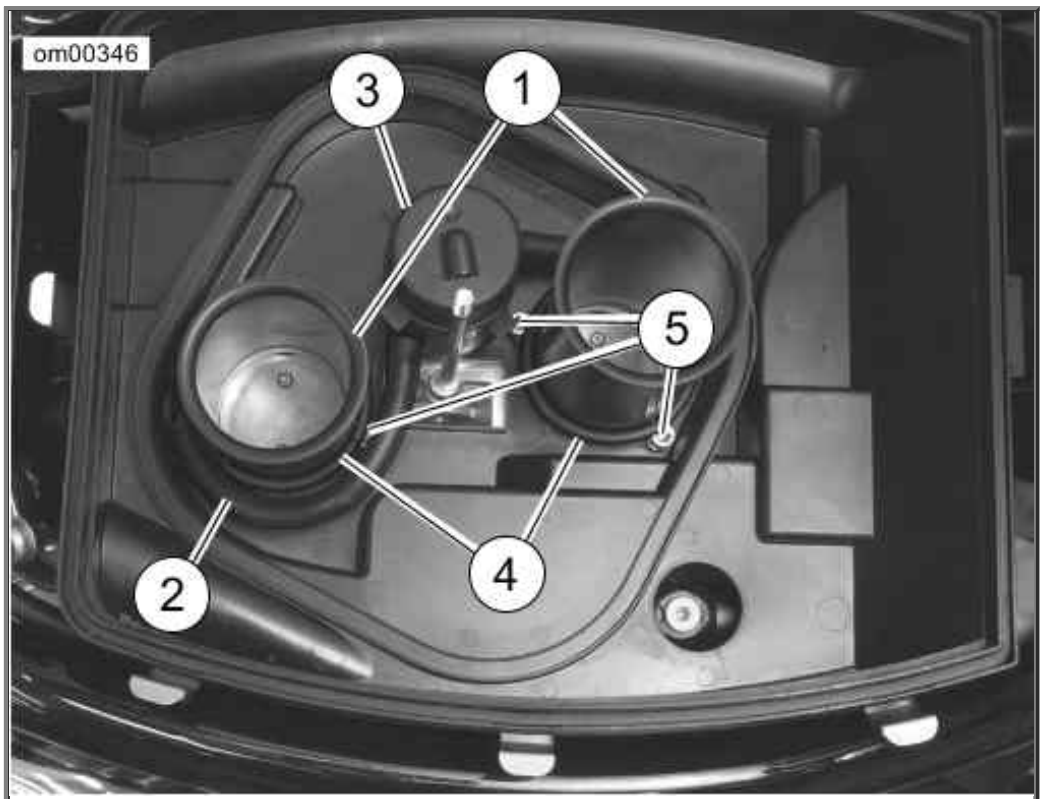

1. Velocity stacks
2. Rear breather hose
3. Air-oil separator
4. O-rings
5. Retaining fasteners (6)

Velocity Stacks

⚠WARNING

Disconnect negative (-) battery cable first. If positive (+) cable should contact ground with negative (-) cable connected, the resulting sparks can cause a battery explosion, which could result in death or serious injury. (00049a)

5. See Battery (12 amp-hour): VRSC Models. Remove the battery negative cable from the negative (-) terminal of the battery.

6. Remove the battery positive cable from the positive (+) terminal of the battery.

   NOTE:

   Do not remove battery hold-down strap clip from battery tray.

7. See Hold-down Strap Over Grommet Bracket: VRSCR Model. Stretch rubber hold-down strap over the airbox cover grommet bracket and remove battery.

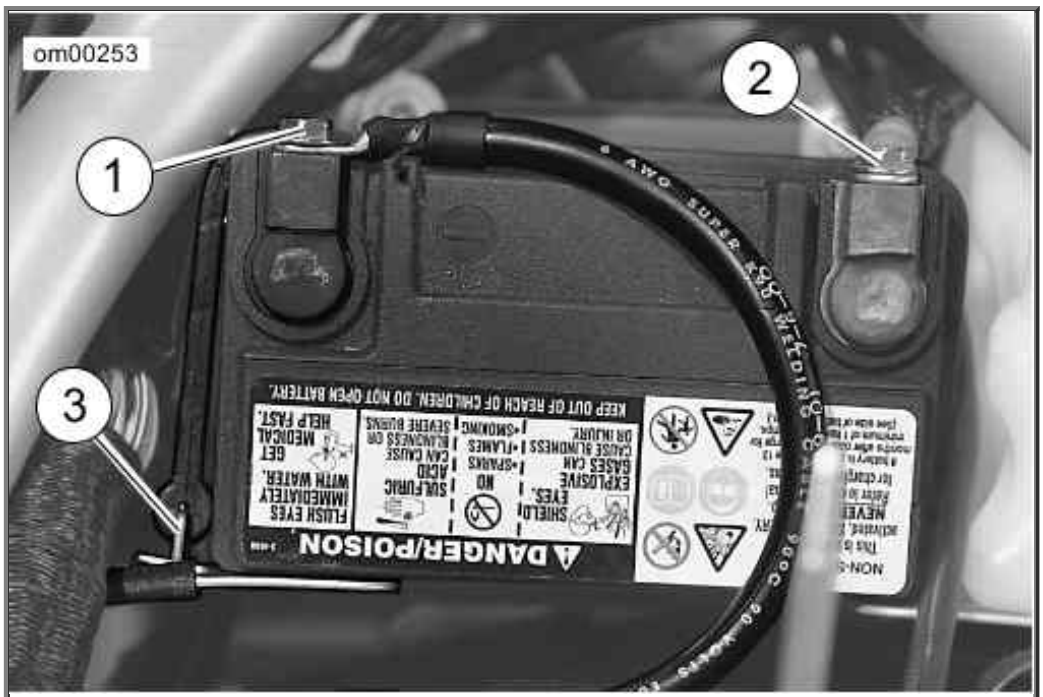

1. Negative battery terminal bolt
2. Positive battery terminal bolt
3. Hold-down strap clip

Battery (12 amp-hour): VRSC Models

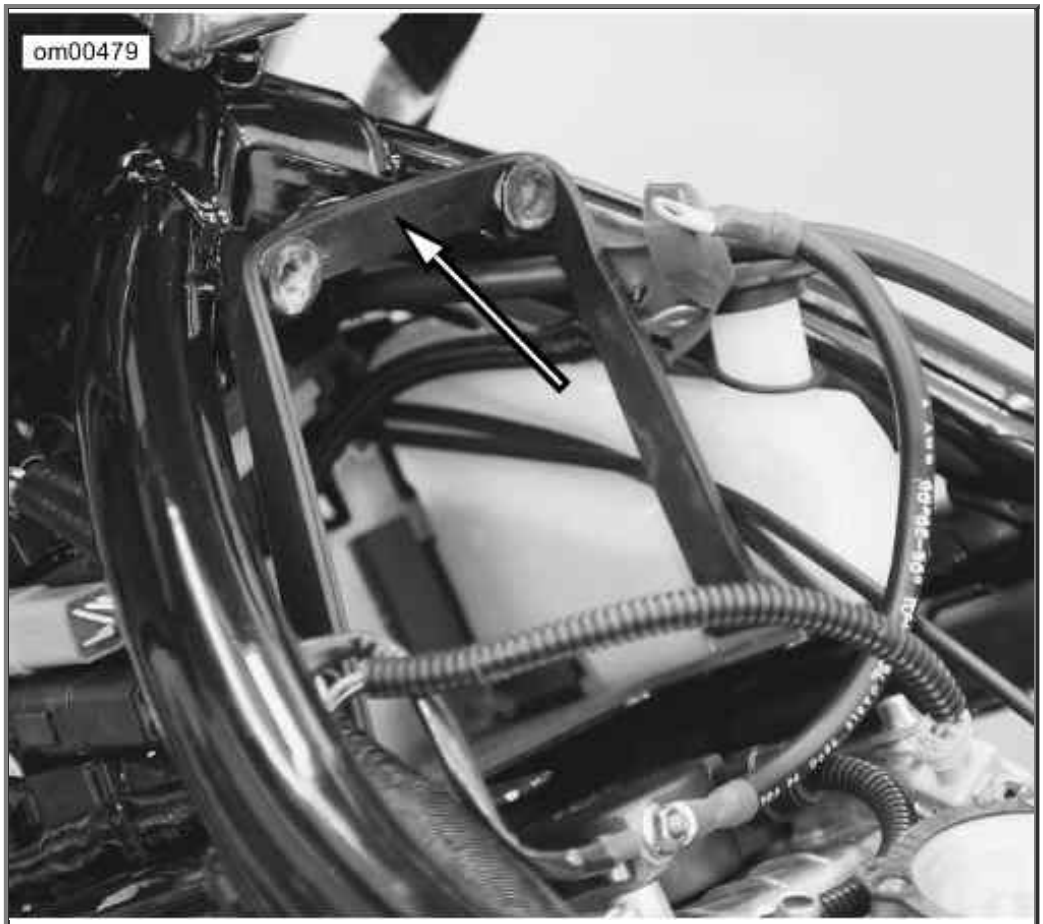

Hold-down Strap Over Grommet Bracket: VRSCR Model

Installation and Connection

1. See Hold-down Strap Over Grommet Bracket: VRSCR Model. Slide the fully charged battery under hold-down strap, terminal side up, negative (-) battery terminal toward the left side of the motorcycle.
2. Remove hold-down strap from grommet bracket.

⚠WARNING

Never route throttle cable over the battery. Fire due to short circuit could occur and cause death or serious injury. Throttle cables must be routed alongside battery, between hold down strap and coolant overflow bottle. (00224a)

CAUTION

Connect the cables to the correct battery terminals. Failure to do so could result in damage to the motorcycle electrical system. (00215a)

⚠WARNING

Connect positive (+) battery cable first. If positive (+) cable

should contact ground with negative (-) cable connected, the resulting sparks can cause a battery explosion, which could result in death or serious injury. (00068a)

⚠WARNING

Do not allow positive (+) battery cable to contact ground with negative (-) cable connected. Resulting sparks can cause a battery explosion, which could result in death or serious injury. (00069a)

CAUTION

Do not over-tighten bolts on battery terminals. Use recommended torque values. Over-tightening battery terminal bolts could result in damage to battery terminals. (00216a)

3. Insert a battery terminal bolt through the battery positive cable (+) (red), into the threaded hole of the battery positive (+) terminal.
4. Tighten the bolt to 60-96 in-lbs (6.8-10.8 Nm).
5. Insert the other battery terminal bolt through the battery negative cable (black), into the threaded hole of the battery negative (-) terminal.
6. Tighten the bolt to 60-96 in-lbs (6.8-10.8 Nm).

CAUTION

Keep battery clean and lightly coat terminals with petroleum jelly to prevent corrosion. Failure to do so could result in damage to battery terminals. (00217a)

7. Apply a light coat of petroleum jelly or corrosion retardant material to both battery terminals.
8. Remove the duct tape from the injector intakes.
9. See Air Cleaner Gasket and Alignment Pins. Inspect the gasket on the bottom of the airbox tray. The gasket is located by the three alignment pins on the mating surface.

   NOTE:

   Replace the gasket if it is torn or damaged in any way.

10. Place the airbox tray over the injectors. Make sure the taller slanted lip of the tray faces the front of the motorcycle. Slide the rectangular hole in the tray down over the threaded mounting stud.
11. See Removing Rear Breather Hose Clamp. Attach the rear breather hose to the fitting on the cam cover. Retain hose with the spring clamp.
12. Align the front breather hose on the airbox tray with the brass tube and press the airbox tray

down firmly. Make sure the tray sits flush on top of the injectors.

NOTE:

In the next step, you will install the velocity stacks. Each velocity stack has an index mark. Align the index mark on the velocity stack with the corresponding index mark on the airbox tray.

13. See Velocity Stack and Airbox Tray Index Marks. Align the index marks and install the velocity stacks, the longest stack toward the front of the motorcycle. Start all fasteners by hand first, making sure none are cross-threaded. Tighten the three fasteners on each velocity stack to 53 in-lbs (6 Nm).

14. Slide the o-ring down each velocity stack until it contacts the three fasteners. Slide the breather hose onto the rear breather hose fitting.

15. Reinstall the air filter element, air cleaner cap, wing nut and airbox cover.

16. Lower the seat back down and lock it in place.

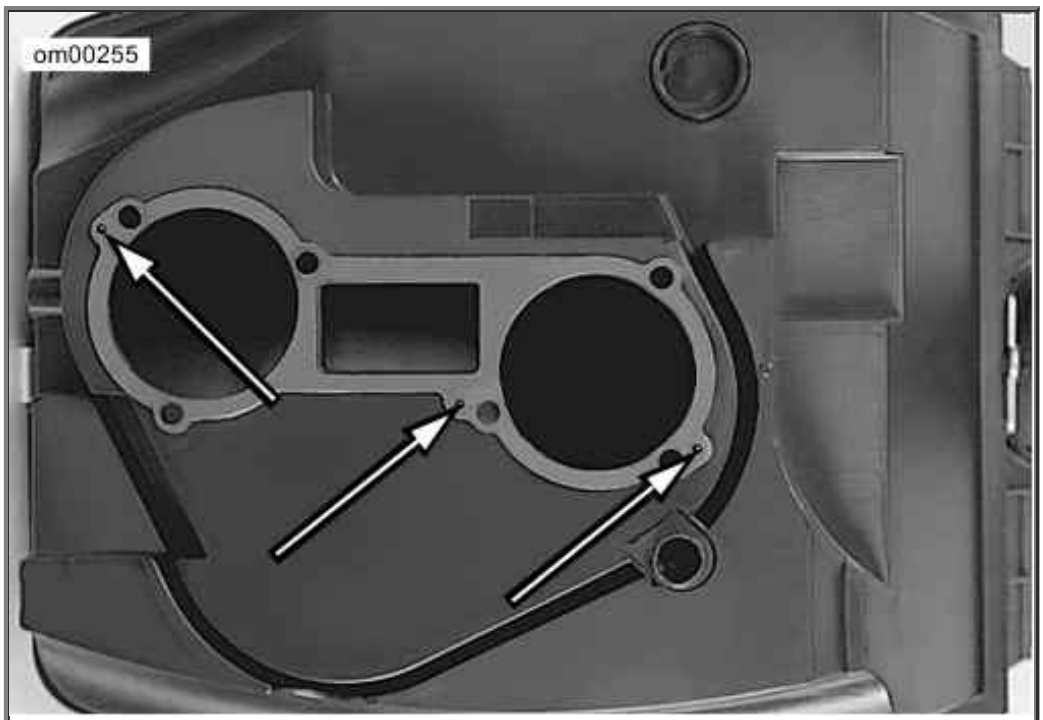

Air Cleaner Gasket and Alignment Pins

1. Velocity stack index mark
2. Airbox tray index mark

Velocity Stack and Airbox Tray Index Marks

Jump Starting

Harley-Davidson does not recommend jump-starting a motorcycle. However, there may be circumstances when it is necessary to do so. Therefore, we suggest jump-starting be performed as follows:

⚠WARNING

Be sure jumper cables touch only appropriate battery terminals or ground. Allowing jumper cables to touch each other can result in sparks and a battery explosion, which could result in death or serious injury. (00072a)

⚠WARNING

Explosive hydrogen gas, which escapes during charging, could cause death or serious injury. Charge battery in a well-ventilated area. Keep open flames, electrical sparks and smoking materials away from battery at all times. KEEP BATTERIES AWAY FROM CHILDREN. (00065a)

CAUTION

Harley-Davidson motorcycles have a 12 Volt battery. Be

sure the booster vehicle has a 12 Volt system. Failure to do so could result in vehicle damage. (00220a)

NOTE:

This procedure presumes the BOOSTER battery is in another vehicle.

1. Turn off all unnecessary lamps and accessories.

Positive Cable

---

2. See Jump Start Cable Connections. Connect one end of a jumper cable to the DISCHARGED battery positive (+) terminal (1).
3. Connect the other end of the same cable to the BOOSTER battery positive (+) terminal (2).

Negative Cable

⚠WARNING

Do not connect negative (-) cable to or near the discharged battery negative (-) terminal. Doing so could cause a spark and explosion, which could result in death or serious injury. (00073a)

4. Connect one end of a jumper cable to the BOOSTER battery negative (-) terminal (3).

CAUTION

Do not connect the negative (-) cable to painted or chrome parts. Doing so could result in discoloration at the attachment point. (00221a)

5. Connect other end of the same cable (4) to a safe ground, (away from the DISCHARGED battery).
6. Start motorcycle.
7. Disconnect cables in reverse order of steps 2, 3, 4, 5. That is: steps 5, 4, 3, 2.

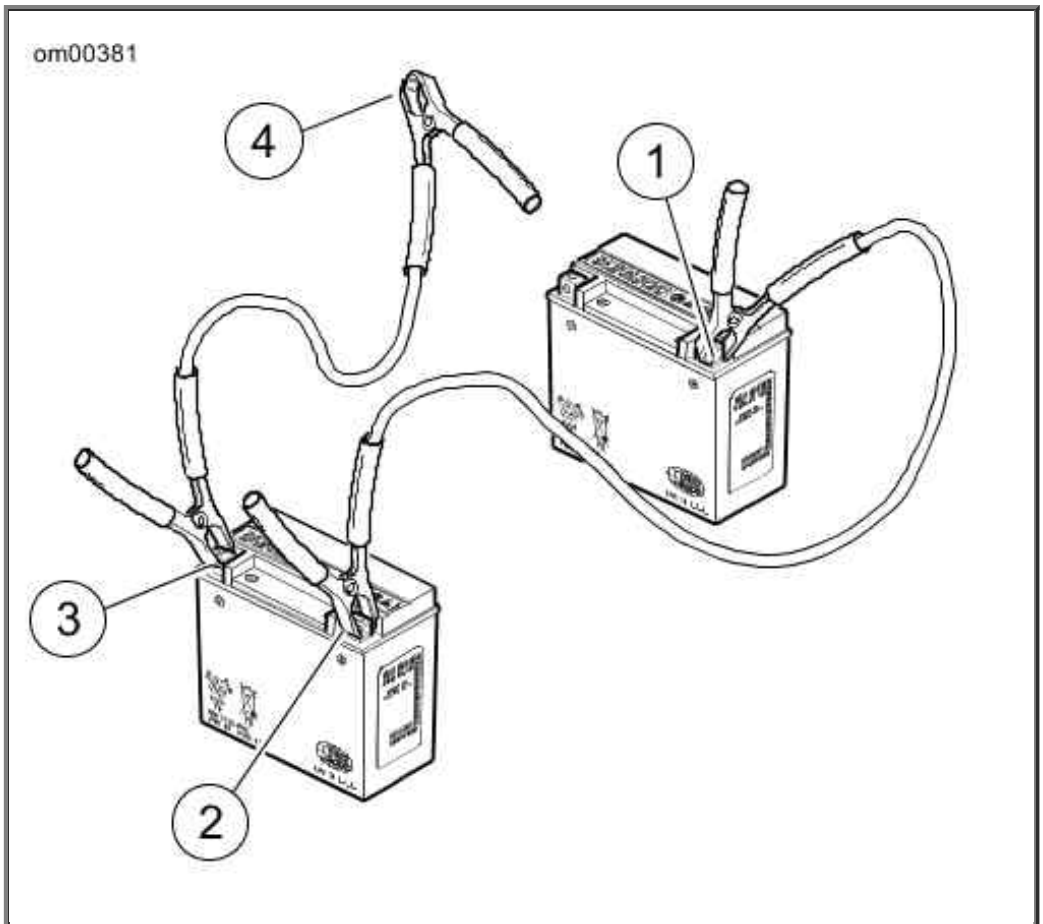

1. Discharged battery positive (+) terminal
2. Booster battery positive (+) terminal
3. Booster battery negative (-) terminal
4. Ground

Jump Start Cable Connections

Electrical Protection: VRSC Models

For electrical problems, it is best to see a Harley-Davidson dealer who has the necessary parts and equipment to perform electrical services.

Accessing Fuse Block and Relays

1. Make sure the ignition is turned OFF.
2. Open the seat.
3. Remove the airbox cover by turning the bailhead fastener 1/4 turn counterclockwise. Pull the airbox cover away from the front locating holes in the frame.
4. See Fuse Block Assembly: VRSC Models. Gently lift up each fuse block cover release tab and slide each fuse block assembly out of the fuse block cover.
5. See Fuses and Relays: VRSC Models. Each fuse block assembly contains both fuses and relays.

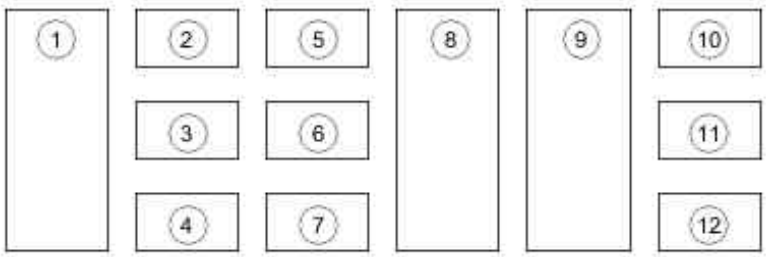

1. Start relay
2. Accessories (15 amp.)
3. Security (15 amp.)
4. Lamps (15 amp.)
5. Spare (15 amp.)
6. Spare (15 amp.)
7. Fuel pump (15 amp.)
8. System relay
9. Fan relay
10. Ignition (15 amp.)
11. ECM power (15 amp.)
12. Battery (15 amp.)

Fuses and Relays: VRSC Models

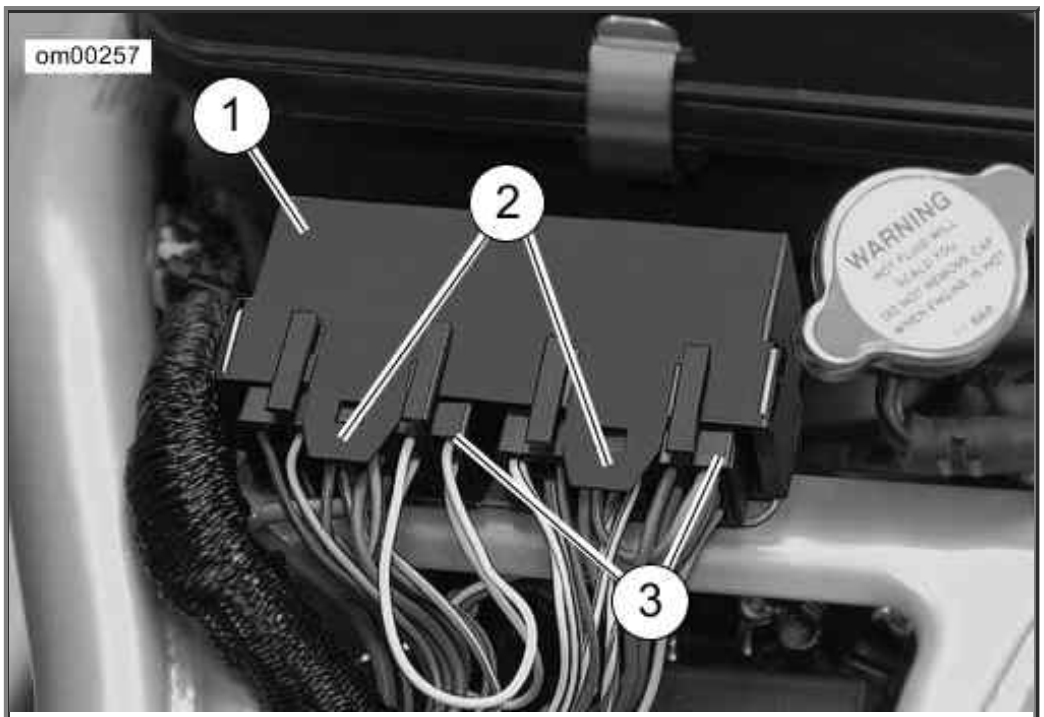

1. Fuse block cover
2. Release tabs
3. Fuse block assemblies

Fuse Block Assembly: VRSC Models

Fuse Replacement

Fuses do not reset. A blown fuse must be replaced.

1. Remove the suspect fuse and inspect the element.

CAUTION

Harley-Davidson motorcycles have a 12 Volt battery. Be sure the booster vehicle has a 12 Volt system. Failure to do so could result in vehicle damage. (00220a)

2. Replace the fuse if the element is burned or broken.

   NOTE:

   Use only automotive type ATO fuses as replacements.

3. Slide each fuse block assembly back into the fuse block cover. Push the fuse block assembly into the cover until the cover release tab snaps into place.

4. Replace the airbox cover. Turn the bailhead fastener 1/4 turn clockwise to secure the cover.

5. Close seat.

⚠WARNING

Never route throttle cable over the battery. Fire due to short circuit could occur and cause death or serious injury. Throttle cables must be routed alongside battery, between hold down strap and coolant overflow bottle. (00224a)

Replacing The Maxi-Fuse

All VRSC models have a main fuse to protect the motorcycle wiring. This 40-amp maxi-fuse provides main battery power to the motorcycle. It is located in a rubber-coated fuse holder behind the motorcycle's right side cover.

1. See Maxi-fuse Replacement: VRSCR Model. Remove the fastener, carefully lift the side cover off the mounting tabs and set it aside.

2. Grasp the fuse holder in one hand, the plastic body of the maxi-fuse in the other, and pull the maxi-fuse straight out of the fuse holder.

3. Insert the prongs of the **new** maxi-fuse in the fuse holder slots. Push the maxi-fuse firmly down into the fuse holder.

4. Replace the side cover on the mounting tabs, line up the hole in the cover with the threaded hole in the frame tab, and install the fastener. Tighten the fastener to 97.2-150.0 in-lbs (11-17 Nm).

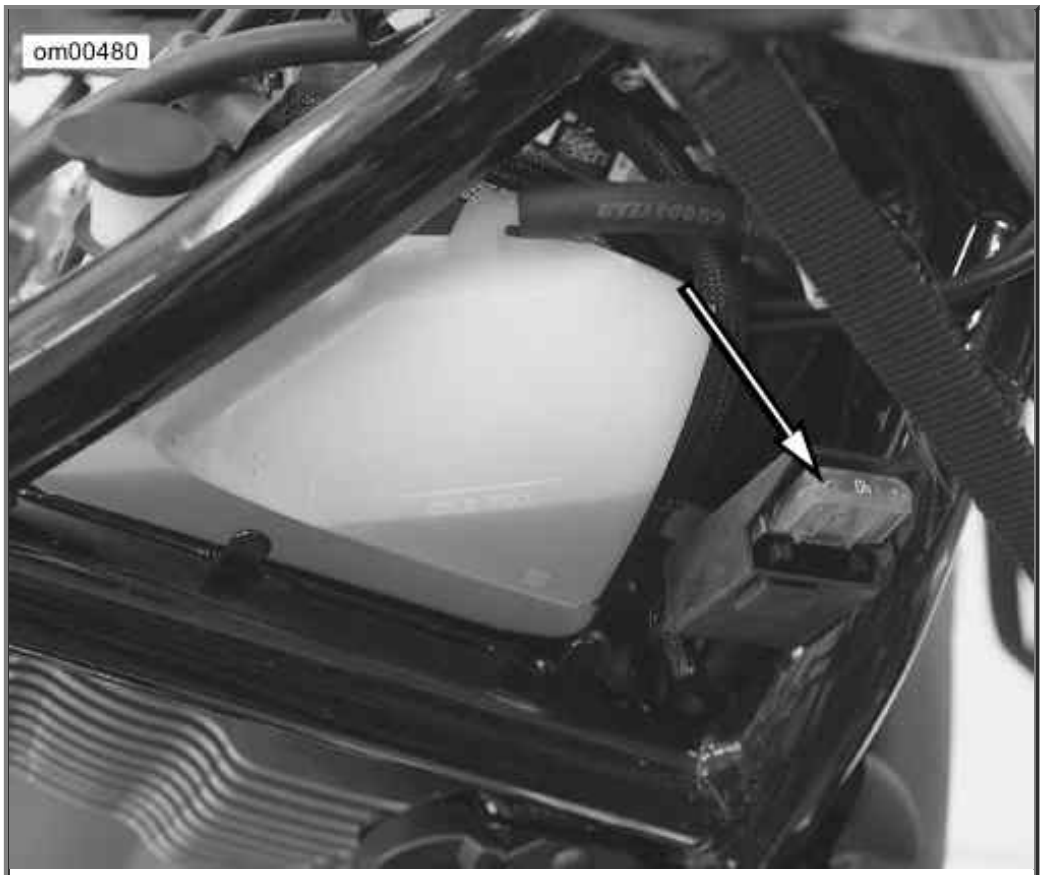

Maxi-fuse Replacement: VRSCR Model

Seat: VRSCR Model

Opening

Seat is hinged on the left side. Grasp lower edge of right side and lift.

NOTE:

See Seat Lanyard: VRSCR Model. The lanyard will hold the seat in position on the motorcycle frame.

Closing

Rotate seat down and press until the seat grommet is fully engaged on the seat pin.

NOTE:

Refer to the VRSC Service Manual for information pertaining to seat installation and removal.

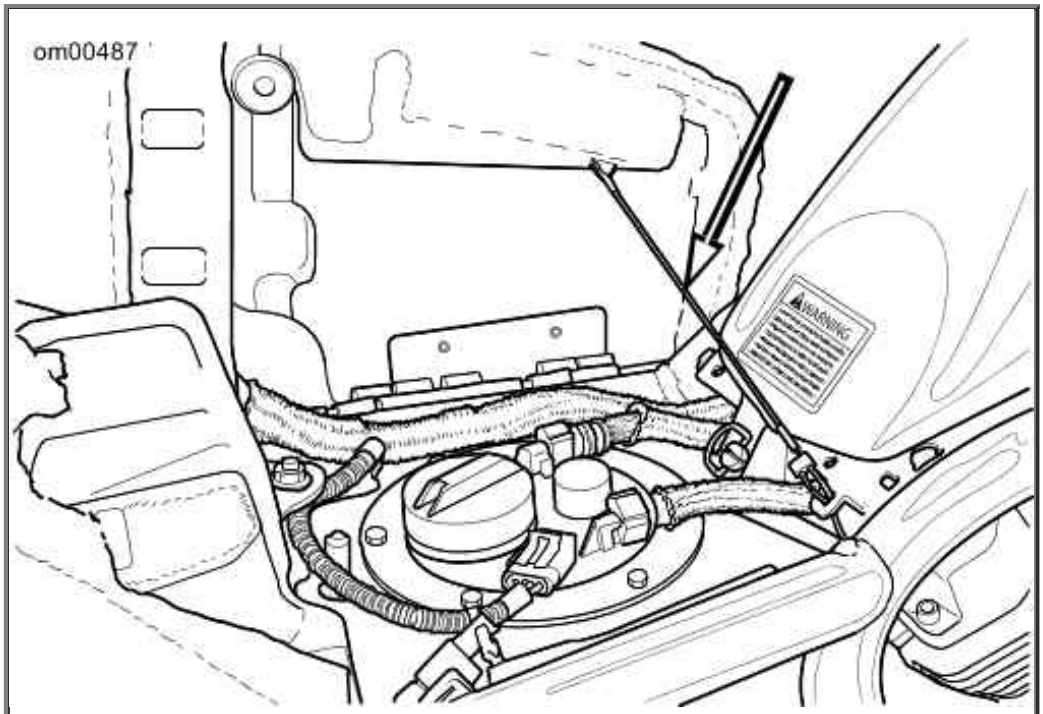

Seat Lanyard: VRSCR Model

Seat: VRSCA/D Models

Opening

For more detailed information about the ignition/seat release switch, see Ignition Switch: VRSC Models.

1. See Ignition/Seat Release Switch: VRSCA/D Models. Push the key into the ignition/seat release switch and turn it counterclockwise to the FUEL position.
2. Lift the seat upward.

   NOTE:

   See Seat Lanyard: VRSC Models. The lanyard will hold the seat in position on the motorcycle frame.

Closing

1. See Ignition/Seat Release Switch: VRSCA/D Models. Verify the ignition/seat release switch is in the FUEL position.
2. Pull the seat downward and firmly press on the seat. Turn the ignition key to the LOCK position. This engages the seat lock.

⚠WARNING

Never route throttle cable over the battery. Fire due to short circuit could occur and cause death or serious injury. Throttle cables must be routed alongside battery, between hold down strap and coolant overflow bottle.

(00224a)

3. Verify the seat lock is engaged by pulling upward on the seat.

NOTE:

Refer to the VRSC Service Manual for information pertaining to seat installation and removal.

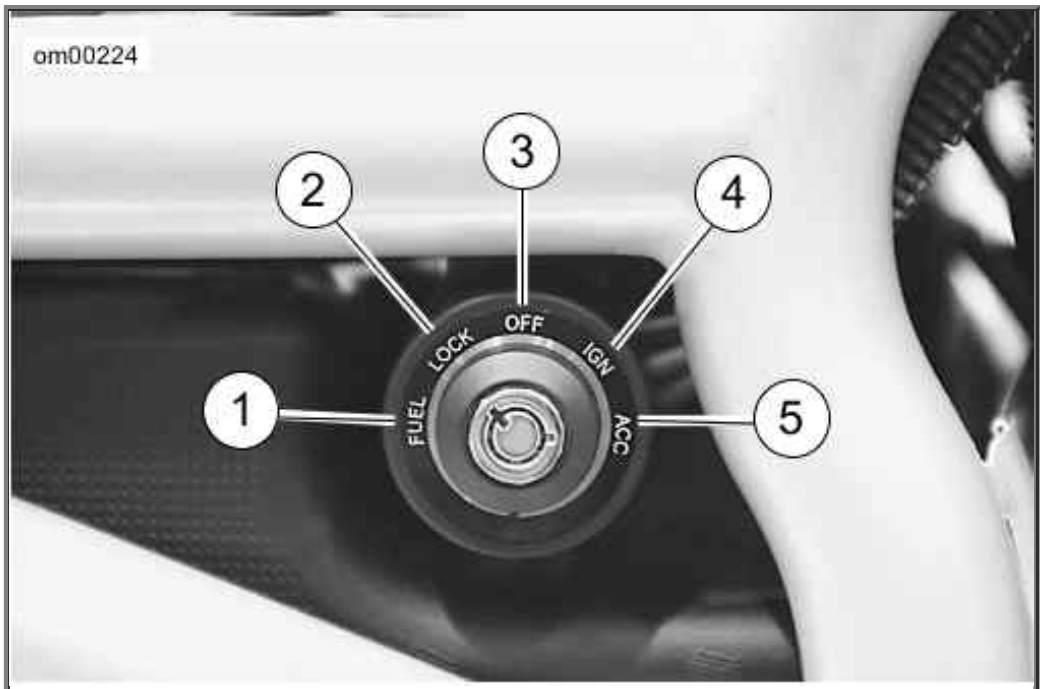

1. Fuel/seat release position
2. Lock position
3. Off position
4. Ignition position
5. Accessory position

Ignition/Seat Release Switch: VRSCA/D Models

Seat Lanyard: VRSC Models

Motorcycle Storage: VRSC Models

Placing Motorcycle in Storage

CAUTION

Proper storage is important for the trouble-free operation of your motorcycle. See your Owner's Manual for storage recommendations or see a Harley-Davidson dealer. Improper storage procedures can lead to equipment damage. (00046a)

If the motorcycle will not be operated for several months, such as during the winter season, there are several tasks which should be performed. These steps will protect parts against corrosion, preserve the battery and prevent the build-up of gum and varnish in the fuel system.

⚠WARNING

Do not store motorcycle with gasoline in tank within the home or garage where open flames, pilot lights, sparks or electric motors are present. Gasoline is extremely flammable and highly explosive, which could result in death or serious injury. (00003a)

NOTE:

Make a list of everything you do and fasten it to a handgrip. When you take the motorcycle out of storage, this list will be your reference/checklist to get your motorcycle in operating condition.

1. Fill fuel tank and add a gasoline stabilizer. Use one of the commercially available gasoline stabilizers and follow the manufacturer's instructions.

2. Warm motorcycle to operating temperature. Change oil and turn engine over to circulate the new oil.

3. Adjust the belt.

4. Check tire inflation. Adjust to proper inflation pressure.

5. Prepare battery for winter storage. See Battery: General.

⚠WARNING

Explosive hydrogen gas, which escapes during charging, could cause death or serious injury. Charge battery in a well-ventilated area. Keep open flames, electrical sparks and smoking materials away from battery at all times. KEEP BATTERIES AWAY FROM CHILDREN. (00065a)

6. If the motorcycle is to be stored with security system armed, it will be necessary to connect a Battery Tender to maintain battery charge. If security system will not be armed and a Battery Tender is not available, remove the Maxi-fuse.

CAUTION

Use ONLY Genuine Harley-Davidson Extended Life Antifreeze and Coolant. Use of other coolants/mixtures may lead to engine damage. (00179a)

7. Check and fill the cooling system.

8. To protect the vehicle's body panels, engine, chassis and wheels from corrosion, follow the cosmetic care procedures described in the Accessory Maintenance section of this owner's manual prior to storage.

9. If motorcycle is to be covered, use a material such as light canvas that will breathe. Plastic materials that do not breathe promote the formation of condensation.

Removing Motorcycle From Storage

⚠WARNING

The clutch failing to disengage can cause loss of control, which could result in death or serious injury. Prior to starting after extended periods of storage, place transmission in gear and push vehicle back and forth several times to assure proper clutch disengagement. (00075a)

1. See Battery: General for proper battery care. Charge and install the battery.
2. Remove and inspect the spark plugs. Replace if necessary.
3. Clean the air cleaner element.
4. Start the engine and run until it reaches normal operating temperature. Turn off engine.
5. Check the oil.
6. Check the clutch fluid level.
7. Check controls to be sure they are operating properly. Operate the front and rear brakes, throttle, clutch and shifter.
8. Check steering for smoothness by turning the handlebars through the full operating range.

⚠WARNING

Coolant mixture contains toxic chemicals, which may be fatal if swallowed. If swallowed, do not induce vomiting; call a physician immediately. Use in a well ventilated area. Irritation to skin or eyes can occur from vapors or direct contact. In case of skin or eye contact, flush thoroughly with water and go to hospital, if necessary. Dispose of used coolant according to federal, state and local regulations. (00092a)

9. Check the radiator connections and coolant level.

⚠WARNING

Be sure tires are properly inflated, balanced and have adequate tread. Inspect your tires regularly and see a Harley-Davidson dealer for replacements. Riding with excessively worn, unbalanced or under-inflated tires can adversely affect stability and handling, which could result in death or serious injury. (00014a)

10. Check tire pressure. Incorrect pressure will result in poor riding characteristics and can affect handling and stability.
11. Check all electrical equipment and switches including the stop lamp, turn signals and horn for proper operation.
12. Check for any fuel, oil, coolant or brake fluid leaks.

Accessories Maintenance

General Maintenance

Maintain chrome and aluminum regularly to check that they retain their original shine and luster. Take care to keep your new Harley-Davidson motorcycle cleaned and waxed as often as possible to inhibit rust and corrosion.

Anodized Surfaces

Anodized surfaces must be treated carefully, using only the recommended products. Use of other products may damage the anodized surfaces.

NOTE:

Anodizing is not plating. It is a process that makes the aluminum harder and more scratch and abrasion resistant. The anodized surface requires only cleaning, and does not need to be waxed or otherwise protected.

Black Denim Finish

General

If your vehicle has flat (or matte) black finish please read below.

- The Black Denim finish has qualities which differ from high gloss finishes on all other Harley-Davidson motorcycles. Like denim fabric, Black Denim paint will burnish or mar with age and use, thus adding character and personality to the finish of the motorcycle.
- If scratched, the color coat of paint does nick/scuff and these marks can not be rubbed out.
- If polished, the finish will become less matte and more glossy over time.

How to Clean

1. For heavier deposits:
    a. Use grease cutting dishwashing detergent and a clean H-D wash-mitt. (Dilute the detergent per the instruction provided by its manufacturer.)
    b. Rinse thoroughly with clean water.
2. For light deposits, use glass cleaner (ammonia base) and H-D Soft Cloth. This helps remove finger prints and light soil.
3. For final detailing use H-D Gloss with H-D Soft Cloth.

Cleaning Your V-Rod

CAUTION

Improper cleaning, or the use of non-recommended care products, or lack of proper maintenance of your VRSC will void your cosmetic warranty coverage. (00226a)

⚠WARNING

Observe warnings on labels of cleaning compounds. Failure to follow warnings could result in death or serious injury. (00076a)

To aid you in keeping your motorcycle clean, see a Harley-Davidson dealer for cleaning and polishing products. As a general guideline, it is recommended that you use the following products for the purposes listed in Recommended Cleaning Care Products.

Recommended Cleaning Care Products

PRODUCT	PART NUMBER	FRAME	BODY PANELS	WHEELS	BLACK DENIM FINISH
H-D Sunwash	94659-98	Yes	Yes	Yes	No
H-D Bug Remover	94657-98	Yes	Yes	Yes	No
Harley-Gloss	94627-98	Yes	Yes	Yes	Yes
Harley Spray Cleaner and Polish	99817-99	Yes	Yes	Yes	No
Wheel and Tire Cleaner	94658-98	No	No	Yes	No
S100 Total Cycle Cleaner (complete rinse required)	99760-85T	Yes	Yes	Yes	No
Grease cutting dishwasher detergent. Dilute per manufacturer's instructions.	N/A	No	No	No	Yes
Ammonia base glass cleaner	N/A	No	No	No	Yes

1. Use H-D SUNWASH 94659-98 first, for general cleaning and washing of all surface finishes. Sunwash has a formulated sheeting action that prevents hard water spots and rinses clean even on hot days in the sun.

CAUTION

Use of pressure washers to clean radiator and oil cooler can damage cooling fins and reduce airflow. Reduced airflow can lead to overheating, resulting in engine damage and could void your engine warranty. (00056a)

2. Next, use H-D BUG REMOVER 94657-98 to remove bugs from all surface finishes. Bug Remover will not damage metal, plastic or painted surfaces.

3. Finally, use HARLEY GLOSS™ 94627-98 as an all-purpose surface protectant that provides UV protection and a gloss finish. Harley Gloss™ contains no waxes, silicones, oils or hydrocarbon solvents.

4. Use HARLEY SPRAY CLEANER AND POLISH 99817-99 for quick touch-ups. It's an all-purpose aerosol cleaner and quick detailer, great for all metal surfaces. This product also reduces static attraction to dust.

5. Use WHEEL AND TIRE CLEANER 94658-98 to clean and degrease wheels and tires. Do not use on frame or anodized parts.

CAUTION

We recommend use of the products listed above. If you wish to use non-recommended cleaning products, test them only in an inconspicuous area on the vehicle's surface first. Do NOT use abrasive or etching cleaners on anodized surfaces! Doing so can result in damage to the surface. (00227a)

CAUTION

Use ONLY Harley Spray Cleaner and Polish, or Harley Gloss on painted surfaces. Use of other cleaners or polishes can damage painted surfaces. (00228a)

NOTE:

See a Harley-Davidson dealer for repair, restoration, or customization of anodized or painted surfaces.

⚠WARNING

Observe warnings on labels of cleaning compounds. Failure to follow warnings could result in death or serious injury. (00076a)

⚠WARNING

Do not let the brakes, engine, mufflers or air cleaner to get wet when washing your motorcycle. Allowing these components to get too wet can adversely affect their performance, which could result in death or serious injury. Start engine immediately after washing, and make sure brakes and engine are operating properly before riding in traffic. (00078a)

⚠CAUTION

Cooling fans operate automatically, even when the ignition switch is off. Keep hands away from fan blades. Contact with a rotating fan blade can result in minor or moderate injury. (00093a)

CAUTION

Clean the front surface of the radiator regularly. Leaves and other debris can collect on the radiator surface and degrade radiator performance which could lead to engine overheating and engine damage. (00197b)

Leather Care

NOTE:

Many Harley-Davidson accessories and seats are either made of leather or have leather inserts. Natural materials age differently and require different care than man-made materials. Seat covers and panels made of leather will gain "character", such as wrinkles, with age. Leather is porous and organic and each leather product will settle into its own distinct form with use. Your leather product will mature into its own custom shape and style from the sun, rain and the miles. This maturing is natural and will enhance the custom quality of your Harley-Davidson motorcycle.

Leather must be periodically cleaned and treated to maintain its appearance and extend its life. Clean and treat leather once a season or more frequently under adverse conditions.

CAUTION

Do not use bleach or detergents containing bleach on saddlebags, seats, tank panels or painted surfaces. Doing so can result in equipment damage. (00229a)

- Do not use ordinary soap to clean leather or fur. It could dry or remove the oils from the leather.
- Use ONLY a good quality saddle soap to clean leather. Be sure you rinse saddle soap off thoroughly before treating leather.
- Never try to dry leather quickly, using artificial means. Always let leather dry naturally, at room temperature.

1. Vacuum or blow dust off.
2. Thoroughly clean leather with a good quality saddle soap, following manufacturer's directions. Rinse thoroughly with clean sponge or cloth and water. Allow leather to dry.
3. Once leather is dry, treat with a good quality leather treatment, such as LEATHERCARE (Part No. 98261-91).
4. Always allow leather to dry completely before using.

Wheel Care: VRSC Models

⚠WARNING

Be careful not to get the brakes wet when washing vehicle. Wet brake pads and/or discs can adversely affect brake performance, which could result in death or serious injury. (00079a)

The vehicle's wheels are chrome forged aluminum. Damage from harsh chemicals, acid based wheel cleaners, brake dust and lack of maintenance can occur. Regular washing and the use of a corrosion protectant will help to maintain their original appearance. Harley-Davidson Wheel & Tire Cleaner 94658-98 is recommended for cleaning wheels and tires. Then use Harley Gloss™ 94627-98 to protect the aluminum wheel surfaces.

NOTES:

- *It is imperative that the wheels are cared for weekly, according to the instructions above, to guard against pitting and corrosion.*
- *Corrosion of these components is not considered to be a defect in materials or workmanship.*

See a Harley-Davidson dealer for cleaning and polishing products.

Windshields

CAUTION

Harley-Davidson windshields are made of Lexan. Lexan is a more durable and distortion-resistant material than other types of motorcycle windshield material, but still requires attention and care to maintain. Failure to maintain Lexan properly can result in damage to the windshield. (00230a)

CAUTION

Do not use harsh chemicals including rain sheeting products on Harley-Davidson windshields. They can cause dulling or hazing. If you want to use a windshield protectant on your windshield, try Harley Glaze Polish and Sealant (00231a)

CAUTION

Do not use benzine, paint thinner, gasoline or any other type of harsh cleaner on the windshield. Doing so will damage the windshield surface. (00232a)

NOTES:

- *To remove minor surface scratches use NOVUS No. 2 SCRATCH REMOVER (Part No. 99836-94T).*
- *Covering the windshield with a clean, wet cloth for approximately 15-20 minutes before washing will make dried bug removal easier.*

1. Use mild soap and warm water to wash the windshield.

2. Wipe dry with a soft, clean towel.

NOTE:

To treat your Lexan windshield with water repellent use WINDSHIELD WATER REPELLENT TREATMENT (Part No. 99841-02).

Troubleshooting

Troubleshooting: General

⚠WARNING

The troubleshooting section of the Owner's Manual is a guide to diagnose problems. Read the service manual before performing any work. Improper repair and/or maintenance could result in death or serious injury. (00080a)

The following checklist of possible operating troubles and their probable causes will be helpful in keeping your motorcycle in good operating condition. More than one of these conditions may be causing trouble and should be carefully checked.

Engine: VRSC Models

Starter Does Not Operate or Does Not Turn Engine Over

---

1. Engine run switch in OFF position.
2. Ignition switch not ON.
3. Discharged battery or loose or corroded connections (solenoid chatters).

Engine Turns Over But Does Not Start

---

1. Fuel tank empty.
2. Fuel vacuum line disconnected.
3. Fuel valve or filter clogged.
4. Discharged battery or loose or broken battery terminal connections.
5. Fouled spark plugs.
6. Spark plug coil connections loose or in bad condition and shorting.
7. Loose or corroded wire or cable connection(s) at coil or battery.
8. Fuel pump inoperative.

Starts Hard

---

1. Spark plugs in bad condition, have improper gap, or are partially fouled.
2. Battery nearly discharged.
3. Loose wire or cable connection(s) at one of the battery terminals or at coil.
4. Engine oil too heavy (winter operation).
5. Fuel tank vent plugged or fuel line closed off, restricting fuel flow.
6. Water or dirt in fuel system.

7. Fuel pump inoperative.

Starts But Runs Irregularly or Misses

1. Spark plugs in bad condition or partially fouled.
2. Spark plug gap too close or too wide.
3. Battery nearly discharged.
4. Damaged wire or loose connection at battery terminals or coils.
5. Intermittent short circuit due to damaged wire insulation.
6. Water or dirt in fuel system, filter or carburetor.
7. Fuel vent system plugged. See dealer.
8. One or more injectors fouled.

A Spark Plug Fouls Repeatly

1. Incorrect spark plug.

Pre-ignition or Detonation (Knocks or Pings)

1. Incorrect fuel.
2. Incorrect spark plug for the kind of service.

Overheats

1. Insufficient oil supply or oil not circulating.
2. Heavy carbon deposit from lugging engine. See dealer.

Excessive Vibration

1. Rear fork pivot shaft nuts loose. See dealer.
2. Front engine mounting bolts loose. See dealer.
3. Broken frame. See dealer.
4. Belt badly worn.
5. Wheels and/or tires damaged. See dealer.
6. Vehicle not properly aligned. See dealer.

Cooling System

Overheats

1. Air flow through the radiator is obstructed.
2. The radiator is internally plugged.
3. Insufficient coolant.
4. Cooling fans not operating.

Electrical System

Alternator Does Not Charge

1. Module not grounded. See dealer.
2. Engine ground wire loose or broken. See dealer.
3. Loose or broken wires in charging circuit. See dealer.

Alternator Charge Rate is Below Normal

1. Weak battery.
2. Excessive use of add-on accessories.
3. Loose or corroded connections.
4. Extensive periods of idling or low speed riding.

Transmission: VRSC Models

Transmission Shifts Hard

1. Bent shifter rod. See dealer.
2. Transmission shifting mechanism needs adjustment. See dealer.

Transmission Jumps Out of Gear

1. Shifter rod improperly adjusted. See dealer.
2. Shifter forks (inside transmission) improperly adjusted. See dealer.
3. Worn shifter dogs in transmission. See dealer.

Clutch Slips

1. Clutch controls improperly adjusted. See dealer.
2. Worn friction discs. See dealer.
3. Insufficient clutch spring tension. See dealer.

Clutch Drags or Does Not Release

1. Clutch controls improperly adjusted. See dealer.
2. Insufficient clutch spring tension. See dealer.
3. Clutch discs warped. See dealer.

Clutch Chatters

1. Friction discs or steel discs worn or warped. See dealer.

Brakes

Brakes Do Not Hold Normally

1. Master cylinder low on fluid. See dealer.
2. Brake line contains air bubbles. See dealer.
3. Master or wheel cylinder piston worn. See dealer.
4. Brake pads contaminated with grease or oil. See dealer.
5. Brake pads badly worn. See dealer.
6. Brake disc badly worn or warped. See dealer.
7. Brake fades because of heat build up. Excessive braking or brake pads dragging. See dealer.
8. Brake drags. Insufficient hand lever free play. See dealer.

Warranties and Responsibilities

Warranty and Maintenance

This Owner's Manual contains your new motorcycle warranty.

It is the owner's responsibility to follow the scheduled mileage intervals as specified; all of the specified maintenance services must be performed to keep your warranty valid.

1. Make an appointment with a Harley-Davidson dealer for inspection and service just before you have ridden 1000 miles (1600 kilometers).
2. Bring this Owner's Manual with you when you visit your dealer to have your motorcycle inspected and serviced.
3. Have the dealer technician sign at the proper mileage interval. The records should be retained by the owner as proof of proper maintenance.
4. Keep receipts covering any parts, service or maintenance performed. These records should be transferred to each subsequent owner.

⚠WARNING

Do not use aftermarket parts and custom made front forks which can adversely affect performance and handling. Removing or altering factory installed parts can adversely affect performance and could result in death or serious injury. (00001a)

Harley-Davidson dealerships are independently owned and operated and may sell parts and accessories that are not manufactured or approved by Harley-Davidson. Therefore, you should understand that we are not and cannot be responsible for the quality, suitability, or safety of any non-Harley-Davidson part, accessory or design modification, including labor, which may be sold and/or installed by our dealers.

Keeping It All Harley-Davidson

1. Keep your Harley-Davidson completely Harley-Davidson.
2. Insist that your dealer uses only Genuine replacement parts to keep your Harley-Davidson motorcycle and its warranty intact.

Exacting design and stringent testing ensure performance and warranty coverage. Again, insist on Genuine parts for your genuine Harley-Davidson motorcycle.

NOTE:

Installing off-road or competition parts to enhance performance may void all or part of your new motorcycle warranty. See the Harley-Davidson Limited Warranty in this manual or a Harley-Davidson dealer for details.

CAUTION

It is possible to overload your motorcycle's charging system by adding too many electrical accessories. If your combined electrical accessories operating at any one time consume more electrical current than your vehicle's charging system can produce, the electrical consumption can discharge the battery and cause vehicle electrical system damage. See a Harley-Davidson dealer for advice about the amount of current consumed by additional electrical accessories, or for necessary wiring changes.

(00211b)

Important Moving Information

If you move from your present address, or sell your motorcycle, please fill out and mail the post card at the back of this manual. This is necessary in the event that the Company needs to contact the owner concerning information that could affect the safe operation of this motorcycle.

California Evaporative Emission Controls: 2006 Models

All new model year 2006 Harley-Davidson motorcycles sold in the State of California are equipped with an evaporative emission control system. This system is designed to meet the CARB regulations in effect at the time of manufacture.

The system requires a small amount of maintenance. Periodic inspection is required to make sure hoses are properly routed, not kinked or blocked and that all fittings are secure. Mounting hardware should also be checked periodically for tightness.

EPA Noise Regulations

EPA noise regulations require that the following statements be included in the Owner's Manual.

TAMPERING WITH NOISE CONTROL SYSTEM PROHIBITED: Federal law prohibits the following acts or the causing thereof: (1) The removal or rendering inoperative by any person other than for purposes of maintenance, repair, or replacement of any device or element of design incorporated into any new vehicle for the purpose of noise control prior to its sale or delivery to the ultimate purchaser or while it is in use, or (2) the use of the vehicle after such device or element of design has been removed or rendered inoperative by any person.

AMONG THOSE ACTS PRESUMED TO CONSTITUTE TAMPERING ARE THE ACTS LISTED BELOW.

1. Replacing the muffler(s) and/or the entire exhaust system with parts not certified to be noise legal for street use.
2. Removing or modifying the muffler internal baffles in any way.
3. Replacing the air intake/cleaner assembly with one not certified to be noise legal for street use.
4. Modifying the air intake/cleaner assembly in such a way as to make the vehicle no longer noise legal for street use.

Harley-Davidson recommends that any and all noise related maintenance be done by an authorized Harley-Davidson dealer using genuine Harley-Davidson parts.

Warranty/Service Information

Any authorized Harley-Davidson dealer is responsible for providing the warranty repair work on your motorcycle. If you have any questions regarding warranty obligations contact your selling dealer.

For normal service work or warranty work under the above conditions, you may obtain the name

and location of your nearest U.S. Harley-Davidson dealer by calling 1-800-490-9635 (toll free), in any state except Alaska and Hawaii.

NOTE:

The number shown above is accessible only with a touch-tone phone.

Reporting Safety Defects

Safety defects must be reported to the National Highway Traffic Safety Administration (NHTSA) and Harley-Davidson.

NHTSA Statement

If you believe that your vehicle has a defect which could cause a crash or could cause injury or death, you should immediately inform the National Highway Traffic Safety Administration (NHTSA) in addition to notifying Harley-Davidson.

If NHTSA receives similar complaints, it may open an investigation, and if it finds that a safety defect exists in a group of vehicles, it may order a recall and remedy campaign. However, NHTSA cannot become involved in individual problems between you, your dealer, or Harley-Davidson.

To contact NHTSA, refer to NHTSA Contacts.

NHTSA Contacts

ITEM	DATA
Phone	Call the Auto Safety Hot Line toll-free at 1-888-DASH-2DOT
Mail	U.S. Department of Transportation, National Highway Traffic Safety Administration, Office of Defects Investigation, NVS-210, 400 7th Street S.W., Washington, D.C. 20590
Web site	www.nhtsa.dot.gov

You can also obtain other information about motor vehicle safety from the hot line.

Owner Transfer Identification Form

When purchasing a pre-owned Harley-Davidson or Buell, we encourage you to submit an Owner Transfer Notification Form. It is critical that new owner information is communicated to Harley-Davidson. New owner information is required to be on file with Harley-Davidson to transfer an Extended Service Plan Contract. Harley-Davidson is also required by the National Traffic and Motor Vehicle Safety Act to notify all owners in the event of a recall. The form may be obtained at any Harley-Davidson dealer.

Required Documentation for Imported Motorcycles

If a Harley-Davidson is imported into the United States, additional documentation is required to be eligible for the United States Manufacturer's Limited Warranty. A Harley-Davidson dealer can provide a form explaining the requirements.

Limited Motorcycle Warranty

2006 HARLEY-DAVIDSON MOTORCYCLE LIMITED WARRANTY

---

24 Months/Unlimited Miles

Harley-Davidson warrants for any new 2006 Harley-Davidson motorcycle/sidecar that an authorized Harley-Davidson dealer will repair or replace without charge any parts found under normal use to be defective in factory materials or workmanship. Such repair and replacement will be Harley-Davidson's sole obligation and the customer's sole remedy under this warranty.

THERE IS NO OTHER EXPRESS WARRANTY (OTHER THAN THE SEPARATE EMISSIONS AND NOISE WARRANTIES) ON THE MOTORCYCLE. ANY IMPLIED WARRANTY OF MERCHANTABILITY OR FITNESS FOR PARTICULAR PURPOSE IS LIMITED TO THE DURATION OF THIS WARRANTY.

Some states do not allow limitations on how long an implied warranty lasts, so the above limitation may not apply to you.

TO THE FULLEST EXTENT ALLOWED BY LAW, HARLEY-DAVIDSON AND ITS DEALERS SHALL NOT BE LIABLE FOR LOSS OF USE, INCONVENIENCE, LOST TIME, COMMERCIAL LOSS OR OTHER INCIDENTAL OR CONSEQUENTIAL DAMAGES. Some states do not allow the exclusion or limitation of incidental or consequential damages, so the above limitation or exclusion may not apply to you. This warranty gives you specific legal rights, and you may have other rights which vary from state to state.

The following terms and conditions apply to this warranty:

Duration

---

1. The duration of this limited warranty is twenty four months, starting from the earlier of (a) the date of initial retail purchase and delivery from an authorized Harley-Davidson dealer, or (b) the third anniversary of the last day of the model year of the motorcycle/sidecar. Your dealer will submit an electronic Sales and Warranty Registration form to initiate your warranty.

2. Any unexpired portion of this limited warranty will be transferred to subsequent owners, upon the resale of the motorcycle/sidecar during the warranty period.

Owner's Obligations

To obtain warranty service, return your motorcycle/sidecar at your expense within the warranty period to an authorized dealer. Our dealer should be able to provide warranty service during normal business hours and as soon as possible, depending upon the workload of the dealer's service department and the availability of necessary parts.

Harley-Davidson Motor Company, P.O. Box 653, Milwaukee, Wisconsin 53201, U.S.A.

Exclusions

This warranty will not apply to any motorcycle/sidecar as follows:

1. Which has not been operated or maintained as specified in the Owner's Manual.
2. Which has been abused, misused, improperly stored, used "off the highway," or used for racing or competition of any kind.
3. Which is not manufactured to comply with the laws of the market in which it is registered.
4. Installing off-road or competition parts to enhance performance may void all or part of your new motorcycle warranty. See a Harley-Davidson dealer for details.

Other Limitations

This warranty does not cover:

1. Parts and labor for normal maintenance as recommended in the Owner's Manual, or the replacement of parts due to normal wear and tear including such items as the following: tires, lubrication, oil and filter change, fuel system cleaning, battery maintenance, engine tune-up, spark plugs, brake, clutch and chain/belt adjustment (including chain replacement).
2. Cosmetic concerns that arise as a result of owner abuse, lack of proper maintenance or environmental conditions (except concerns that result from defects in material or workmanship, which are covered by this warranty for the duration of the warranty period).
3. Any cosmetic condition existing at the time of retail delivery that has not been documented by the selling dealer prior to retail delivery.
4. Defects or damage to the motorcycle caused by alterations outside of Harley-Davidson factory specifications.

Important: Read Carefully

1. Our dealers are independently owned and operated and may sell other products. Because of this, HARLEY-DAVIDSON IS NOT RESPONSIBLE FOR THE SAFETY, QUALITY, OR SUITABILITY OF ANY NON-HARLEY-DAVIDSON PART, ACCESSORY OR DESIGN MODIFICATION INCLUDING LABOR WHICH MAY BE SOLD AND/OR INSTALLED BY OUR DEALERS.
2. This warranty is a contract between you and the manufacturer. It is separate and apart from any warranty you may receive or purchase from the dealer. The dealer is not authorized to alter, modify, or in any way change the terms and conditions of this warranty.
3. Any warranty work or parts replacement authorized by the manufacturer will not preclude the manufacturer from later relying on any exclusion where applicable.

Limited Noise Warranty

2006 HARLEY-DAVIDSON MOTORCYCLE NOISE CONTROL SYSTEM LIMITED

WARRANTY

The following warranty applies to the noise control system, is in addition to the MOTORCYCLE LIMITED WARRANTY and EMISSION CONTROL SYSTEM LIMITED WARRANTY, and applies only to motorcycles sold in the U.S.

Harley-Davidson Motor Company warrants that this vehicle is designed and built so as to conform at the time of sale with applicable regulations of the U.S. Environmental Protection Agency (as tested following F-76 Drive-By test procedure) and that it is free from defects in materials and workmanship which would cause this motorcycle not to meet U.S. Environmental Protection Agency Standards within 1 year or 3,730 miles (6,000 kilometers) whichever expires first. Any unexpired portion of this limited warranty will be transferred to subsequent owners, upon the resale of the motorcycle during the warranty period.

THERE IS NO OTHER EXPRESS WARRANTY (OTHER THAN THE SEPARATE MOTORCYCLE AND EMISSIONS WARRANTIES) ON THE MOTORCYCLE. ANY IMPLIED WARRANTY OF MERCHANTABILITY OR FITNESS FOR PARTICULAR PURPOSE IS LIMITED TO THE DURATION OF THIS WARRANTY.

Some states do not allow limitations on how long an implied warranty lasts, so the above limitation may not apply to you.

The warranty period shall begin on the date the motorcycle is delivered to the first retail purchaser or, if the motorcycle is placed in service as a demonstrator or company vehicle prior to sale at retail, on the date it is first placed in service.

THE FOLLOWING ITEMS ARE NOT COVERED BY THE NOISE CONTROL SYSTEM WARRANTY

1. Failures which arise as a result of misuse, alterations, or accident as specified in the Owner's Manual.

2. Replacing, removing, or modifying any portion of the NOISE CONTROL SYSTEM (consisting of the exhaust system and air intake/cleaner assembly) with parts not certified to be legal for street use.

3. Any motorcycle on which the odometer mileage has been changed so that the mileage cannot be determined.

4. TO THE FULLEST EXTENT ALLOWED BY LAW, HARLEY-DAVIDSON AND ITS DEALERS SHALL NOT BE LIABLE FOR LOSS OF USE, INCONVENIENCE, LOST TIME, COMMERCIAL LOSS OR OTHER INCIDENTAL OR CONSEQUENTIAL DAMAGES.

Some states do not allow the exclusion or limitation of incidental or consequential damages, so the above limitation or exclusion may not apply to you.

Other Rights

This warranty gives you specific legal rights, and you may have other rights which vary from state to state.

Recommendations for Required Maintenance

It is recommended that any noise system maintenance be performed by an authorized Harley-Davidson dealer using genuine Harley-Davidson replacement parts. The maintenance, replacement or repair of the noise control system may be performed by any other qualified service outlet or individual. Non-genuine parts may be used only if such parts are certified to comply with U.S. Environmental Protection Agency Standards.

Harley-Davidson Motor Company, P.O. Box 653, Milwaukee, Wisconsin 53201, U.S.A.

Limited Emission Warranty

2006 HARLEY-DAVIDSON EMISSION CONTROL SYSTEM LIMITED WARRANTY

The following warranty applies to the emission control system, is in addition to the LIMITED MOTORCYCLE WARRANTY and NOISE CONTROL SYSTEM LIMITED WARRANTY, and applies only to motorcycles sold in the U.S.

Harley-Davidson Motor Company warrants that this vehicle is designed and built so as to conform at the time of sale with applicable regulations of the U.S. Federal Environmental Protection Agency, and that it is free from defects in materials and workmanship which would cause this motorcycle not to meet U.S. Environmental Protection Agency Standards within 5 years or 18,641 miles (30,000 kilometers) whichever expires first. Any unexpired portion of this limited warranty will be transferred to subsequent owners, upon the resale of the motorcycle during the warranty period.

THERE IS NO OTHER EXPRESS WARRANTY (OTHER THAN THE SEPARATE MOTORCYCLE AND NOISE WARRANTIES) ON THE MOTORCYCLE. ANY IMPLIED WARRANTY OF MERCHANTABILITY OR FITNESS FOR PARTICULAR PURPOSE IS LIMITED TO THE DURATION OF THIS WARRANTY.

Some states do not allow limitations on how long an implied warranty lasts, so the above limitation may not apply to you.

The warranty period shall begin on the date the motorcycle is delivered to the first retail purchaser or, if the motorcycle is placed in service as a demonstrator or company vehicle prior to sale at retail, on the date it is first placed in service.

THE FOLLOWING ITEMS ARE NOT COVERED BY THE EMISSION CONTROL SYSTEM WARRANTY

1. Failures which arise as a result of misuse, alterations, accident or non-performance of maintenance as specified in the Owner's Manual.

2. The replacement of parts (such as spark plugs, fuel and oil filters, etc.) used in required maintenance.

3. Any motorcycle on which the odometer mileage has been changed so that the mileage cannot be determined.

4. TO THE FULLEST EXTENT ALLOWED BY LAW, HARLEY-DAVIDSON AND ITS DEALERS SHALL NOT BE LIABLE FOR LOSS OF USE, INCONVENIENCE, LOST TIME, COMMERCIAL LOSS OR OTHER INCIDENTAL OR CONSEQUENTIAL DAMAGES.

Some states do not allow the exclusion or limitation of incidental or consequential damages, so the above limitation or exclusion may not apply to you.

Other Rights

This warranty gives you specific legal rights, and you may have other rights which vary from state to state.

Recommendations for Required Maintenance

It is recommended that any emission system maintenance be performed by an authorized Harley-Davidson dealer using genuine Harley-Davidson replacement parts. The maintenance, replacement or repair of the emissions control system may be performed by any other qualified service outlet or individual. Non-genuine parts may be used only if such parts are certified to comply with U.S. Environmental Protection Agency Standards.

Harley-Davidson Motor Company, P.O. Box 653, Milwaukee, Wisconsin 53201, U.S.A.

Maintenance Scheduling

Regular Service Intervals

Regular lubrication and maintenance will help keep your new Harley-Davidson operating at peak performance. Your Harley-Davidson dealer knows best how to service your motorcycle with factory approved methods and equipment assuring you of thorough and competent workmanship.

NOTES:

- *Refer to Regular Service Intervals: 2006 VRSC Models. Regular maintenance interval operations are required to keep your new motorcycle warranty in force. The use of other than Harley-Davidson approved parts and service procedures may void the warranty. Any alterations to the emission system components, such as the carburetor and exhaust system, may be in violation of Federal and State laws.*
- *Refer to Owner's Maintenance Records. When servicing your motorcycle, bring this owner's manual to the dealership and complete information needed in the blank columns listed.*

⚠WARNING

Perform the service and maintenance operations as indicated in the regular service interval table. Lack of regular maintenance at the recommended intervals can affect the safe operation of your motorcycle, which could result in death or serious injury. (00010a)

⚠WARNING

If you operate your motorcycle under adverse conditions (severe cold, extreme heat, very dusty environment, very bad roads, through standing water, etc.), you should perform the regular maintenance intervals more frequently to ensure the safe operation of your motorcycle. Failure to maintain your motorcycle could result in death or serious injury. (00094a)

Regular Service Intervals: 2006 VRSC Models

ITEM SERVICED	PROCEDURE	1000 MI. 1600 KM	5000 MI. 8000 KM	10,000 MI. 16,000 KM	15,000 MI. 24,000 KM	20,000 MI. 32,000 KM	25,000 MI. 40,000 KM	NOTES
Engine oil and filter	Replace	X	X	X	X	X	X	
Oil lines and brake system	Inspect for leaks	X	X	X	X	X	X	1
Air cleaner	Inspect, service as required	X	X	X	X	X	X	
Tires	Check pressure, inspect tread	X	X	X	X	X	X	
Clutch fluid	Check level and condition	X	X	X	X	X	X	
Rear belt and sprockets	Inspect, adjust belt	X	X	X	X	X	X	1
Throttle, brake and clutch controls	Check, adjust and lubricate	X	X	X	X	X	X	1
Jiffy stand	Inspect and lubricate	X	X	X	X	X	X	1
Brake fluid	Check levels and condition	X	X	X	X	X	X	5
Brake pads and discs	Inspect for wear	X	X	X	X	X	X	
Spark plugs	Inspect		X		X		X	
	Replace			X		X		
Electrical equipment and switches	Check operation	X	X	X	X	X	X	
Front fork oil		Replace every 30,000 miles (48,000 kilometers)						1
Steering head bearings	Adjust	X				X		1, 2
Rear fork bearings		Repack every 30,000 miles (48,000 kilometers)						1
Valve lash		Adjust valve lash every 12,000 miles (19,000 kilometers)						1, 4
Cooling system	Inspect; check clamps for tightness, check coolant freeze point	X		X		X		1
Coolant		Replace every 30,000 miles (48,000 kilometers)						1
Radiator	Clean	X	X	X	X	X	X	
Critical fasteners	Check tightness	X		X		X		1
Battery	Check battery and clean connections							3
Road test	Verify component and	X	X	X	X	X	X	

	system functions							
NOTES:	1. Should be performed by an authorized Harley-Davidson dealer, unless you have the proper tools, service data and are mechanically qualified. 2. Disassemble, lubricate and inspect every 30,000 miles (48,000 kilometers). 3. Perform annually. 4. Could vary with frequency of operation and riding style. 5. Change D.O.T. 4 and flush brake system every two years.							

Owner's Maintenance Records

SERVICE MILE INTERVAL	DATE	DEALER NUMBER	TECHNICIAN NAME	TECHNICIAN SIGNATURE
1000 mi. (1600 km)				
5000 mi. (8000 km)				
10,000 mi. (16,000 km)				
15,000 mi. (24,000 km)				
20,000 mi. (32,000 km)				
25,000 mi. (40,000 km)				
30,000 mi. (48,000 km)				
35,000 mi. (56,000 km)				
40,000 mi. (64,000 km)				
45,000 mi. (72,000 km)				
50,000 mi. (80,000 km)				

Service Literature

Refer to Service Literature: 2006 VRSC Models. Visit a Harley-Davidson dealer or www.harley-davidson.com to purchase a service or parts manual for your motorcycle. Factory authorized manuals are the most complete and detailed source of information outside of your Harley-Davidson dealer.

Service Literature: 2006 VRSC Models

DOCUMENT	LANGUAGE	PART NUMBER
Service Manual	English	99501-06A
Electrical Diagnostics Manual	English	99499-06A
Service and Electrical Diagnostics Manual	French	99501-06FA
Service and Electrical Diagnostics Manual	German	99501-06GA
Service and Electrical Diagnostics Manual	Spanish	99501-06SA
Service and Electrical Diagnostics Manual	Italian	99501-06IA
Parts Catalog	English	99457-06A