# Safety First

## Safe Operating Rules: FLHTCUSE3

**⚠WARNING**

**Motorcycles are different from other vehicles. They operate, steer, handle and brake differently. Unskilled or improper use could result in loss of control, death or serious injury. (00556c)**

- **Take a rider training course.**
- **Read Owner's Manual before riding, adding accessories or servicing.**
- **Wear a helmet, eye protection and protective clothing.**
- **Never tow a trailer.**

Before operating your new motorcycle it is your responsibility to read and follow the operating and maintenance instructions in this manual, and follow these basic rules for your personal safety.

- Know and respect the rules of the road (see RULES OF THE ROAD section). Carefully read and observe the rules contained in the RIDING TIPS booklet accompanying this Owner's Manual. Read and familiarize yourself with the contents of the MOTORCYCLE HANDBOOK for your state.
- Before starting engine, check for proper operation of brake, clutch, shifter, throttle controls, correct fuel and oil supply.

**⚠WARNING**

**Do not use aftermarket parts and custom made front forks which can adversely affect performance and handling. Removing or altering factory installed parts can adversely affect performance and could result in death or serious injury. (00001a)**

- Use only Harley-Davidson approved parts and accessories. Use of certain other manufacturer's performance parts will void your new motorcycle warranty. See your Harley-Davidson dealer for details.

**⚠WARNING**

**Stop the engine when refueling or servicing the fuel system. Do not smoke or allow open flame or sparks near gasoline. Gasoline is extremely flammable and highly explosive, which could result in death or serious injury. (00002a)**

When refueling your motorcycle, the following rules should be observed.

- Refuel in a well ventilated area with the engine turned off.
- Remove fuel filler cap slowly.
- Do not smoke or allow open flames or sparks when refueling or servicing the fuel system.
- Do not fill fuel tank above the bottom of the filler neck insert.
- Leave air space to allow for fuel expansion.

**⚠WARNING**

**Do not store motorcycle with gasoline in tank within the home or garage where open flames, pilot lights, sparks or electric motors are present. Gasoline is extremely flammable and highly explosive, which could result in death or serious injury. (00003a)**

**⚠WARNING**

**Engine exhaust from this product contains chemicals known to the State of California to cause cancer, and birth defects or other reproductive harm. (00004f)**

**⚠WARNING**

**Wheel weights on wheels without spokes contain lead and lead compounds, chemicals known to the State of California to cause cancer, and birth defects or other reproductive harm. (00356d)**

**⚠WARNING**

**Do not run motorcycle in a closed garage or confined area. Inhaling motorcycle exhaust, which contains poisonous carbon monoxide gas, could result in death or serious injury. (00005a)**

**⚠WARNING**

**The jiffy stand locks when placed in the full forward (down) position with vehicle weight on it. If the jiffy stand is not in the full forward (down) position with vehicle weight on it, the vehicle can fall over which could result in death or serious injury. (00006a)**

**⚠WARNING**

**Be sure jiffy stand is fully retracted before riding. If jiffy stand is not fully retracted, it can contact the road surface causing a loss of vehicle control, which could result in death or serious injury. (00007a)**

- A new motorcycle must be operated according to the special break-in procedure. See

Break-in Riding Rules.

- Operate motorcycle only at moderate speed and out of traffic until you have become thoroughly familiar with its operation and handling characteristics under all conditions.

*NOTE:*

*We recommend that you obtain information and formal training in the correct motorcycle riding technique. In the United States, the Motorcycle Safety Foundation® offers beginning and advanced rider safety courses. Call (949)727-3227 for information.*

**⚠WARNING**

**Travel at speeds appropriate for road and conditions and never travel faster than posted speed limit. Excessive speed can cause loss of vehicle control, which could result in death or serious injury. (00008a)**

- Do not exceed the legal speed limit or drive too fast for existing conditions. Always reduce speed when poor driving conditions exist. High speed increases the influence of any other condition affecting stability and increases the possibility of loss of control.
- Pay strict attention to road surfaces and wind conditions. Any two wheeled vehicle may be subject to upsetting forces such as wind blasts from passing trucks, holes in the pavement, rough road surfaces, rider control error, etc. These forces may influence the handling characteristics of your motorcycle. If this happens, reduce speed and guide the motorcycle with a relaxed grip to a controlled condition. Do not brake abruptly or force the handlebar. This may aggravate an unstable condition.
- Keep cargo weight concentrated close to the motorcycle and as low as possible to minimize the change in the motorcycle's center of gravity. Distribute weight evenly on both sides of the vehicle and do not load bulky items too far behind the rider or add weight to the handlebars or front forks. Do not exceed maximum specified load in each saddlebag.

*NOTE:*

*New riders should gain experience under various conditions while driving at moderate speeds.*

- Operate your motorcycle defensively. Remember, a motorcycle does not afford the same protection as an automobile in an accident. One of the most common accident situations occurs when the driver of the other vehicle fails to see or recognize a motorcycle and turns left into the on-coming motorcyclist. Operate only with headlamp on.
- Wear an approved helmet, clothing, and foot gear suited for motorcycle riding. Bright or light colors are best for greater visibility in traffic, especially at night. Avoid loose, flowing garments and scarves.

**⚠WARNING**

**Avoid contact with exhaust system and wear protective clothing that completely covers legs while riding. Exhaust pipes and mufflers get very hot when engine is running and remain too hot to touch, even after engine is turned off. Failure to wear protective clothing could result in burns or other serious injury. (00009a)**

- When carrying passengers, it is your responsibility to instruct them on proper riding procedures. (See Riding Tips for Motorcyclist included in your Harley-Davidson Owner's Kit.)

- Do not allow other individuals, under any circumstances, to operate your motorcycle unless you know they are experienced, licensed riders and are thoroughly familiar with the operation of your particular motorcycle.

- Protect your motorcycle against theft. After parking your motorcycle, lock the steering head and remove ignition key from switch. Set security alarm if present.
- Safe motorcycle operation requires alert mental judgment combined with a defensive driving attitude. Do not allow fatigue, alcohol or drugs to endanger your safety or that of others.
- Vehicles equipped with a sound system should have the volume adjusted to a nondistracting level before operating vehicle.
- Maintain your motorcycle in proper operating condition in accordance with Voltmeter Test. Particularly important to motorcycle stability is proper tire inflation pressure, tread condition, and proper adjustment of wheel bearings and steering head bearings.

**⚠WARNING**

**See the Accessory and Cargo section in your Owner's Manual. Improper loading of cargo or installation of accessories can affect motorcycle stability and handling, which could result in death or serious injury. (00021a)**

**⚠WARNING**

**Do not operate vehicle with forks locked. Locking the forks restricts the vehicle's turning ability, which could result in death or serious injury. (00035a)**

**⚠WARNING**

**Perform the service and maintenance operations as indicated in the regular service interval table. Lack of regular maintenance at the recommended intervals can affect the safe operation of your motorcycle, which could result in death or serious injury. (00010a)**

**⚠WARNING**

**Do not operate motorcycle with loose, worn or damaged steering or suspension systems. Contact a Harley-Davidson dealer for repairs. Loose, worn or damaged steering or suspension components can adversely affect stability and handling, which could result in death or serious injury. (00011a)**

**⚠WARNING**

**Regularly inspect shock absorbers and front forks. Replace leaking, damaged or worn parts that can adversely affect stability and handling, which could result in death or serious injury. (00012a)**

**⚠WARNING**

**Use Harley-Davidson replacement fasteners. Aftermarket fasteners can adversely affect performance, which could result in death or serious injury. (00013a)**

- See a Harley-Davidson service manual for proper torque values.
- Aftermarket fasteners may not have the specific property requirements to perform properly.

**⚠WARNING**

**Be sure tires are properly inflated, balanced and have adequate tread. Inspect your tires regularly and see a Harley-Davidson dealer for replacements. Riding with excessively worn, unbalanced or under-inflated tires can adversely affect stability and handling, which could result in death or serious injury. (00014a)**

**⚠WARNING**

**Replace punctured or damaged tires. In some cases, small punctures in the tread area may be repaired from within the demounted tire by a Harley-Davidson dealer. Speed should NOT exceed 50 mph (80 km/h) for the first 24 hours after repair, and the repaired tire should NEVER be used over 80 mph (130 km/h). Failure to follow this warning could result in death or serious injury. (00015a)**

**⚠WARNING**

**Do not tow a disabled motorcycle. Towing can adversely affect stability and handling, which could result in death or serious injury. (00017a)**

**⚠WARNING**

**Do not pull a trailer with a motorcycle. Pulling a trailer can cause tire overload, reduced braking efficiency and adversely affect stability and handling, which could result in death or serious injury. (00018b)**

**⚠CAUTION**

**Direct contact of D.O.T. 4 brake fluid with eyes can cause irritation. Avoid eye contact. In case of eye contact flush with large amounts of water and get medical attention. Swallowing large amounts of D.O.T. 4 brake fluid can cause digestive discomfort. If swallowed, obtain medical attention. Use in well ventilated area. KEEP OUT OF REACH OF CHILDREN. (00240a)**

**⚠WARNING**

**Batteries, battery posts, terminals and related accessories contain lead and lead compounds, and other chemicals known to the State of California to cause cancer, and birth defects or other reproductive harm. Wash hands after handling. (00019e)**

**⚠WARNING**

**Consult a Harley-Davidson dealer regarding any questions or problems that occur in the operation of your motorcycle. Failure to do so can aggravate an initial problem, cause costly repairs, cause an accident and could result in death or serious injury. (00020a)**

- Be sure all equipment required by federal, state and local law is installed and in good operating condition.

**⚠WARNING**

**Do not add a sidecar to the Screamin' Eagle FLHTCUSE motorcycle, as it is not designed for sidecar use. Use of this vehicle for this purpose can cause loss of vehicle control, which could result in death or serious injury. (00488c)**

**⚠WARNING**

**If ABS lamp remains on continuously, the ABS is not operating. The standard brake system is operational, but wheel lock up can occur. Contact a Harley-Davidson Dealer to have ABS repaired. A locked wheel will skid and can cause loss of vehicle control, which could result in death or serious injury. (00361a)**

**⚠WARNING**

**ABS cannot prevent lockup of rear wheel due to engine braking. ABS will not aid in cornering or on loose/uneven surfaces. A locked wheel will skid and can cause loss of vehicle control, which could result in death or serious injury. (00362a)**

## Rules of the Road

- Always sound your horn, actuate your turn signals, and exercise caution when passing other vehicles going in the same direction. Never try to pass another vehicle going in the same direction at street intersections, on curves, or when going up or down a hill.
- At street intersections give the right-of-way. Do not presume you have the right-of-way, as

the other driver may not know it is your turn.
- Always signal when preparing to stop, turn or pass.
- All traffic signs, including those used for the control of traffic at intersections, should be obeyed promptly. SLOW DOWN signs near schools and CAUTION signs at railroad crossings should always be observed and your actions governed accordingly.
- When intending to turn, signal at least 100 feet 30.5 meters before reaching the turning point. If turning across an intersection, move over to the centerline of the street (unless local rules require otherwise). Slow down when entering the intersection and turn carefully.
- Never anticipate a traffic light. When a change is indicated from GO to STOP (or vice versa) in the traffic control systems at intersections, slow down and wait for the light to change. Never run through a yellow or red traffic light.
- While turning either right or left, watch for pedestrians, animals, as well as vehicles.
- Do not leave the curb or parking area without signaling. Be sure your way is clear to enter moving traffic. A moving line of traffic always has the right-of-way.
- Be sure your license plate is installed in the position specified by law and is clearly visible at all times. Keep the plate clean.
- Ride at a safe speed that is consistent with the type of highway you are on. Pay strict attention to whether the road is dry, oily, icy or wet.
- Watch for debris such as leaves or loose gravel.
- Weather and traffic conditions on the highway dictate adjusting your speed and driving habits accordingly.

### Accessories and Cargo: FLHTCUSE3

Harley-Davidson Motor Company cannot test and make specific recommendations concerning every accessory or combination of accessories sold. Therefore, the rider must be responsible for safe operation of the motorcycle when installing accessories or carrying additional weight.

**⚠WARNING**

**Do not exceed the motorcycle's Gross Vehicle Weight Rating (GVWR) or Gross Axle Weight Rating (GAWR). Exceeding these weight ratings can affect stability and handling, which could result in death or serious injury. (00016e)**

- GVWR is the sum of the weight of the motorcycle, accessories, and the maximum weight of the rider, passenger and cargo that can be safely carried.
- GAWR is the maximum amount of weight that can be safely carried on each axle.
- The GVWR and GAWR are shown on the information plate which is located on the frame down tube.

**⚠WARNING**

**Do not pull a trailer with a motorcycle. Pulling a trailer can cause tire overload, reduced braking efficiency and adversely affect stability and handling, which could result in death or serious injury. (00018b)**

## Accessory and Cargo Guidelines

The following guidelines should be used when equipping a motorcycle, carrying passengers and/or cargo.

**⚠WARNING**

**Travel at speeds appropriate for road and conditions and never travel faster than posted speed limit. Excessive speed can cause loss of vehicle control, which could result in death or serious injury. (00008a)**

- Do not exceed the legal speed limit or drive too fast for existing conditions. Always reduce speed when poor driving conditions exist. High speed increases the influence of any other condition affecting stability and increases the possibility of loss of control.
- Pay strict attention to road surfaces and wind conditions. Any two wheeled vehicle may be subject to upsetting forces such as wind blasts from passing trucks, holes in the pavement, rough road surfaces, rider control error, etc. These forces may influence the handling characteristics of your motorcycle. If this happens, reduce speed and guide the motorcycle with a relaxed grip to a controlled condition. Do not brake abruptly or force the handlebar. This may aggravate an unstable condition.
- Keep cargo weight concentrated close to the motorcycle and as low as possible. This minimizes the change in the motorcycle's center of gravity.
- Distribute weight evenly on both sides of the vehicle.
- Do not load bulky items too far behind the rider or add weight to the handlebars or front forks.
- Do not exceed maximum specified load in each saddlebag.
- Luggage racks are designed for lightweight items. Do not overload racks.
- Be sure cargo is secure and will not shift while riding and recheck the cargo periodically. Accessories that change the operator's riding position may increase reaction time and affect handling of the motorcycle.
- Additional electrical equipment may overload the motorcycle's electrical system possibly resulting in electrical system and/or component failure.

**⚠WARNING**

**The front and/or rear guard(s) can provide limited leg and cosmetic vehicle protection under unique circumstances. (Fall over while stopped, very slow speed slide.) It is not made or intended to provide protection from bodily injury in a collision with another vehicle or any other object. (00022a)**

Large surfaces such as fairings, windshields, back rests, and luggage racks can adversely affect handling. Only genuine Harley-Davidson items designed specifically for the motorcycle model should be used with proper installation.

**⚠WARNING**

**Do not use aftermarket parts and custom made front forks which can adversely affect performance and handling. Removing or altering factory installed parts can adversely affect performance and could result in death or serious injury. (00001a)**

**⚠WARNING**

**Do not add a sidecar to the Screamin' Eagle FLHTCUSE motorcycle, as it is not designed for sidecar use. Use of this vehicle for this purpose can cause loss of vehicle control, which could result in death or serious injury. (00488c)**

### Noise Control System

## Tampering

Owners are warned that removal or replacement of any noise control system component may be prohibited by law. This prohibition applies prior to vehicle sale or delivery to the ultimate purchaser. Use of a vehicle on which noise control system components have been removed or rendered inoperative may also be prohibited by law.

# Identification

### Vehicle Identification Number (V.I.N.): FLHTCUSE3

## General

See Typical Harley-Davidson V.I.N.: 2008 FLHTCUSE3 Models. A unique 17-digit serial or Vehicle Identification Number (V.I.N.) is found on each motorcycle. For a description of each item in the V.I.N., refer to Harley-Davidson V.I.N. Breakdown: 2008 FLHTCUSE3 Models.

## Location

The full 17-digit serial or Vehicle Identification Number (V.I.N.) is stamped on the right side of the frame backbone at the rear of the steering head under the main wiring harness. A label bearing the V.I.N. code is also affixed to the left side of the steering head.

## Abbreviated V.I.N.

An abbreviated V.I.N. is stamped on the left side of the crankcase below the engine cylinders.

**Example:** PR88111000

See Typical Harley-Davidson V.I.N.: 2008 FLHTCUSE3 Models for the complete V.I.N. as it appears on the steering head.

*NOTE:*

*Always give the full 17-digit Vehicle Identification Number when ordering parts or making any inquiry about your motorcycle.*

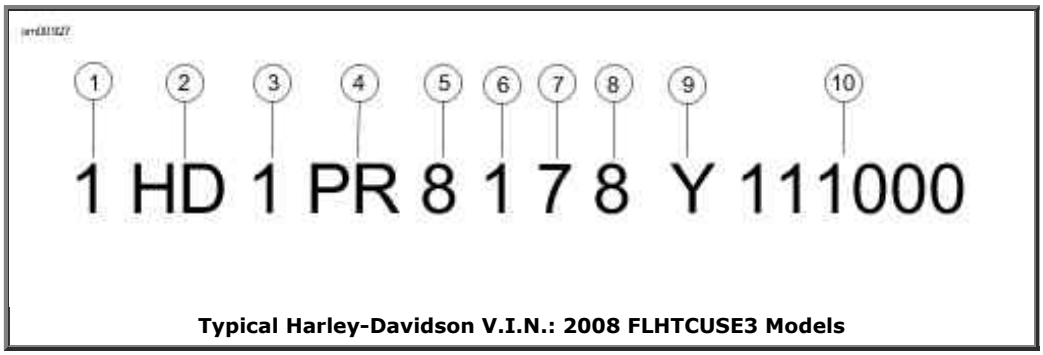


**Typical Harley-Davidson V.I.N.: 2008 FLHTCUSE3 Models**

**Harley-Davidson V.I.N. Breakdown: 2008 FLHTCUSE3 Models**

| POSITION | DESCRIPTION | POSSIBLE VALUES |
|---|---|---|
| 1 | Market designation | 1=Originally manufactured for sale **within** the United States<br>5=Originally manufactured for sale **outside** of the United States |
| 2 | Manufacturer | HD=Harley-Davidson |
| 3 | Motorcycle type | 1=Heavyweight motorcycle (901 cc or larger) |
| 4 | Model | PR=FLHTCUSE3 Screamin' Eagle® Ultra Classic® Electra Glide® |
| 5 | Engine type | 8=110 cu. in. (1800 cc) air cooled, fuel injected |
| 6 | Introduction date | 1=Regular<br>2=Mid-year<br>3=California/regular<br>4=Cosmetic changes and/or special introductory date<br>5=California/cosmetic changes and/or special introductory date<br>6=California/mid-year |
| 7 | V.I.N. check digit | Can be 0-9 or X |
| 8 | Model year | 8=2008 |
| 9 | Assembly plant | Y=York, PA U.S.A. |
| 10 | Sequential number | Varies |

## Labels

See Labels: FLHTCUSE3 for safety and maintenance labels which were on the vehicle when new. If removed, replacement labels may be purchased for your motorcycle. Refer to Labels: FLHTCUSE3 for label descriptions.

**Labels: FLHTCUSE3**

| ITEM | PART NO. | DESCRIPTION | LOCATION |
|---|---|---|---|
| 1 | 29127-95B | General warnings | Top of air cleaner cover |
| 2 | 15368-01A | Battery warning | Under seat, right side of frame |

| | | | |
|---|---|---|---|
| 3 | 14148-86 | Highway bar warning | On front of highway bar below center mount |
| 4 | 90820-93C | Saddlebag load limits | Inside saddlebag. |
| 5 | 90821-74B | Tour-Pak load limits | Inside Tour-Pak lid. |
| 6 | 72635-08 | Fuse block cover | Under left side cover on fuse block |

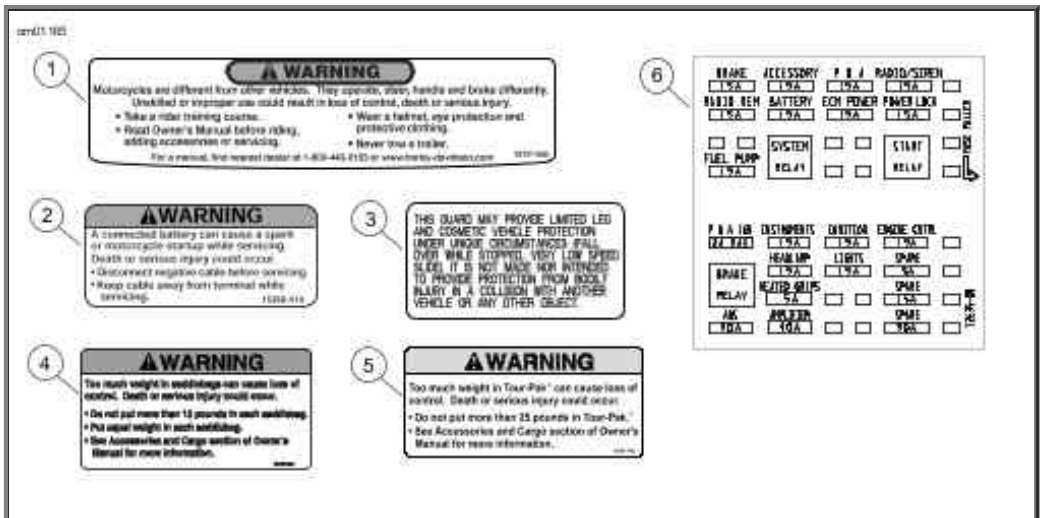


**Labels: FLHTCUSE3**

# Specifications

## Specifications: 2008 FLHTCUSE3

**Engine: 2008 FLHTCUSE3**

| ITEM | SPECIFICATION | |
|---|---|---|
| Number of cylinders | 2 | |
| Type | 4-cycle, 45 degree<br><br>V-Type, air cooled | |
| Compression ratio | 9.3:1 | |
| Bore | 4.00 in. | 101.60 mm |
| Stroke | 4.38 in. | 111.25 mm |
| Displacement | 110 cu. in. | 1802.58 cc |
| Torque (North America) | 115 ft-lbs @ 3000 RPM | 156 Nm @ 3000 RPM |
| Torque (International) | 104 ft-lbs @ 4200 RPM | 141 Nm @ 4200 RPM |

**Ignition System: 2008 FLHTCUSE3**

| COMPONENT | SPECIFICATION |
|---|---|
| Ignition timing | not adjustable |

| | | |
|---|---|---|
| Battery | 12 volt, 28 Amp/hr,<br>sealed and maintenance free | |
| Spark plug type | HD-6R12 | |
| Spark plug size | 12 mm | |
| Spark plug gap | 0.038-0.043 in. | 0.97-1.09 mm |
| Spark plug torque | 12-18 ft-lbs | 16.3-24.4 Nm |

**Transmission Specifications**

| TRANSMISSION | SPECIFICATION |
|---|---|
| Type | Constant mesh, foot shift |
| Speeds | 6 forward |

*NOTE:*

*Specifications in this publication may not match those of official certification in some markets due to timing of publication printing, variance in testing methods, and/or vehicle differences. Customers seeking officially recognized regulatory specifications for their vehicle should refer to certification documents and/or contact their respective dealer or distributor.*

**Sprocket Teeth: 2008 FLHTCUSE3**

| DRIVE | ITEM | NUMBER OF TEETH |
|---|---|---|
| Primary | Engine | 34 |
| | Clutch | 46 |
| Final | Transmission | 32 |
| | Rear wheel | 66 |

**Capacities: 2008 FLHTCUSE3**

| ITEM | U.S. | LITERS |
|---|---|---|
| Fuel tank (total) | 6.0 gal | 22.7 |
| Oil tank with filter | 4.0 U.S. qt. | 3.8 |
| Transmission<br>(approximate) | 32 fl. oz. | 0.946 |
| Primary chaincase<br>(approximate) | 45.0 fl. oz. | 1.3 |

**Gear Ratios: 2008 FLHTCUSE3**

| GEAR | RATIO |
|---|---|
| | |

| | |
|---|---|
| 1st Gear | 9.312 |
| 2nd Gear | 6.421 |
| 3rd Gear | 4.774 |
| 4th Gear | 3.926 |
| 5th Gear | 3.279 |
| 6th Gear | 2.790 |

*NOTE:*

*Gross Vehicle Weight Rating (GVWR) (maximum allowable loaded vehicle weight) and corresponding Gross Axle Weight Ratings (GAWR) are given on a label located on the frame below the steering head.*

**Weights: 2008 FLHTCUSE3**

| ITEM | LB. | KG |
|---|---|---|
| Weight as shipped from factory | 864 | 392 |
| GVWR | 1259 | 571 |
| GAWR front | 500 | 227 |
| GAWR rear | 827 | 375 |

**Dimensions: 2008 FLHTCUSE3**

| ITEM | IN. | MM |
|---|---|---|
| Wheel base | 63.5 | 1612.9 |
| Overall length | 97.6 | 2478.3 |
| Overall width | 38.2 | 970.3 |
| Road clearance | 4.9 | 124.5 |
| Overall height | 57.1 | 1450.3 |
| Saddle height* | 28.7 | 729 |
| *With 180 lb. (81.7 kg) rider on seat. | | |

**Tire Sizes: 2008 FLHTCUSE3**

| MOUNT | SIZE | NUMBER |
|---|---|---|
| Front | 16 in. | D402F MT90B16 |
| Rear | 16 in. | D402 MU85B16 |
| 2008 motorcycles use Dunlop Harley-Davidson tires only. | | |

**Tire Pressures: 2008 FLHTCUSE3**

| LOAD | TIRE PRESSURE (COLD) |
|---|---|

| | FRONT | | REAR | |
|---|---|---|---|---|
| | PSI | kPa | PSI | kPa |
| Solo Rider | 36 | 248 | 36 | 248 |
| Rider and Passenger | 36 | 248 | 40 | 276 |

**Bulb Chart: 2008 FLHTCUSE3**

| LAMP | DESCRIPTION (ALL LAMPS 12 VOLT) | BULBS REQUIRED | CURRENT DRAW AMPERAGE | HARLEY-DAVIDSON PART NUMBER |
|---|---|---|---|---|
| Headlamp | Headlamp - low (domestic) | 1 | 2.7 | 68096-04 |
| | Headlamp - high (domestic) | 1 | 4.3 | 68881-01 |
| | Headlamp - (international) | 1 | 4.58/5.0 | 68329-03 |
| | Position lamp international | 1 | 0.32 | 53438-92 |
| Tail and stop lamp | Tail lamp | 1 | 0.59 | 68167-04 |
| | Stop lamp | 1 | 2.10 | 68167-04 |
| | Tail lamp international | 1 | 0.59 | 68167-04 |
| | Stop lamp international | 1 | 2.10 | 68167-04 |
| Turn signal lamp | Front/running | 2 | 2.25/0.59 | 69331-02 |
| | Front international | 2 | 1.75 | 68163-84 |
| | Rear | 2 | 2.25 | 69330-02 |
| | Rear international | 2 | 1.75 | 68163-84 |
| Auxiliary lighting | License plate lamp international | 1 | 0.37 | 53436-97 |
| | Tour-Pak lamp* | N/A | N/A | N/A |
| | Auxiliary lamps | 2 | 2.1 | 68453-05 |
| | Auxiliary lamps international | 2 | 2.7 | 68851-98 |
| Instrument panel lamps | High beam indicator | 1 | 0.15 | Instrument panel is illuminated with LEDs. Replace the entire assembly upon failure. |
| | Oil pressure indicator | 1 | 0.15 | |
| | Neutral indicator | 1 | 0.15 | |
| | Turn signal indicator | 2 | 0.08 | |

| | | | | |
|---|---|---|---|---|
| Gauge lamps | Speedometer* | N/A | N/A | N/A |
| | Tachometer* | N/A | N/A | N/A |
| | Voltmeter | 1 | 0.24 | 67454-04 |
| | Oil pressure | 1 | 0.24 | 67454-04 |
| | Air temperature | 1 | 0.24 | 67454-04 |
| | Fuel | 1 | 0.24 | 67454-04 |
| Items with * | Illuminated with LEDs. Replace entire assembly upon failure. | | | |

## Tire Data

**⚠WARNING**

**Match tires, tubes, air valves and caps to the correct wheel rim. Contact a Harley-Davidson dealer. Mismatching can result in damage to the tire bead, allow tire slippage on the rim or cause tire failure, which could result in death or serious injury. (00023a)**

**⚠WARNING**

**Use only Harley-Davidson approved tires. See a Harley-Davidson dealer. Using non-approved tires can adversely affect stability, which could result in death or serious injury. (00024a)**

Tubeless tires fitted with the correct size inner tubes may be used on all Harley-Davidson laced (wire spoked) wheels. Protective rubber rim strips must be used with tubeless tires (fitted with correct size inner tubes) when mounted on laced (wire spoked) wheels.

**⚠WARNING**

**Use inner tubes on laced (wire spoked) wheels. Using tubeless tires on laced wheels can cause air leaks, which could result in death or serious injury. (00025a)**

Tubeless tires are used on all Harley-Davidson cast and disc wheels.

Tire sizes are molded on the tire sidewall. Inner tube sizes are printed on the tube.

**⚠WARNING**

**Harley-Davidson front and rear tires are not the same. Interchanging front and rear tires can cause tire failure, which could result in death or serious injury. (00026a)**

**⚠WARNING**

**Do not inflate tire beyond maximum pressure as specified on sidewall. Over inflated tires can blow out, which could result in death or serious injury. (00027a)**

**⚠WARNING**

**Harley-Davidson tires are equipped with wear bars that run horizontally across the tread. When wear bars become visible and only 1/32 in. (0.8 mm) tread depth remains, replace tire immediately. Using a worn tire can adversely affect stability and handling, which could result in death or serious injury. Use only Harley-Davidson approved replacement tires. (00090b)**

See Specifications: 2008 FLHTCUSE3 for tire pressures and sizes.

## Gasoline Blends

Your motorcycle was designed to get the best performance and efficiency using unleaded gasoline. Most gasoline is blended with alcohol and/or ether to create oxygenated blends. The type and amount of alcohol or ether added to the fuel is important.

**CAUTION**

**Do not use gasoline that contains methanol. Doing so can result in fuel system component failure, engine damage and/or equipment malfunction. (00148a)**

- Gasoline containing METHYL TERTIARY BUTYL ETHER (MTBE): Gasoline/MTBE blends are a mixture of gasoline and as much as 15% MTBE. Gasoline/MTBE blends can be used in your motorcycle.
- ETHANOL is a mixture of 10% ethanol (Grain alcohol) and 90% unleaded gasoline. Gasoline/ethanol blends can be used in your motorcycle if the ethanol content does **not** exceed 10%.
- REFORMULATED OR OXYGENATED GASOLINES (RFG): Reformulated gasoline is a term used to describe gasoline blends that are specifically designed to burn cleaner than other types of gasoline, leaving fewer tailpipe emissions. They are also formulated to evaporate less when you are filling your tank. Reformulated gasolines use additives to oxygenate the gas. Your motorcycle will run normally using this type of gas and Harley-Davidson recommends you use it when possible, as an aid to cleaner air in our environment.

Some gasoline blends might adversely affect the starting, driveability or fuel efficiency of the motorcycle. If any of these problems are experienced, try a different brand of gasoline or gasoline with a higher octane blend.

## Fuel

Refer to Octane Ratings. Always use a good quality unleaded gasoline. Octane ratings are usually found on the pump.

**⚠WARNING**

**Avoid spills. Slowly remove filler cap. Do not fill above bottom of filler neck insert, leaving air space for fuel expansion. Secure filler cap after refueling. Gasoline is extremely flammable and highly explosive, which could result in death or serious injury. (00028a)**

**⚠WARNING**

**Use care when refueling. Pressurized air in fuel tank can force gasoline to escape through filler tube. Gasoline is extremely flammable and highly explosive, which could result in death or serious injury. (00029a)**

Modern service station pumps dispense a high flow of gasoline into a motorcycle fuel tank making air entrapment and pressurization a possibility.

**Octane Ratings**

| SPECIFICATION | RATING |
|---|---|
| Pump Octane (R+M)/2 | 91 (95 RON) |

## Catalytic Converters

California and all international motorcycles are equipped with catalytic converters.

**CAUTION**

**Do not operate catalytic converter-equipped vehicle with engine misfire or a non-firing cylinder. If you operate the vehicle under these conditions, the exhaust will become abnormally hot, which can cause vehicle damage, including emission control loss. (00149a)**

**CAUTION**

**Use only unleaded fuel in catalytic converter-equipped motorcycles. Using leaded fuel will damage the emission control system. (00150b)**

# Controls and Indicators

## General: Controls and Indicators

**⚠WARNING**

**Read the CONTROLS AND INDICATORS section before riding your motorcycle. Failure to understand the operation of the motorcycle could result in death or serious injury. (00043a)**

Some features explained are unique to certain models. These features may be available as accessories for your Harley-Davidson motorcycle. See a Harley-Davidson dealer for a complete list of accessories that will fit your specific motorcycle.

## Ignition/Headlamp Switch/Fork Lock: FLHTCUSE3

---

**⚠WARNING**

**The automatic-on headlamp feature provides increased visibility of the rider to other motorists. Be sure headlamp is on at all times. Poor visibility of rider to other motorists can result in death or serious injury. (00030b)**

See the CUSTOMER SERVICE ASSISTANCE section at the very front of this owner's manual before the TABLE OF CONTENTS. Be sure to record all your key numbers in the space provided.

See Ignition/Headlamp Switch/Fork Lock: FLHTCUSE. The ignition/headlamp switch (1) controls electrical functions of the motorcycle. The key lock (2) locks the switch in the FORK LOCK or the ACCESS position.

*NOTES:*

- *Harley-Davidson recommends removing key from ignition/headlamp switch/fork lock before operating motorcycle. If you do not remove key, it can fall out during operation.*
- *ACCESS - Accessories and hazard warning flasher can be turned on. Instrument lamps are on. Brake lamp and horn can be activated. Key may be removed.*
- *The lamps illuminate when the switch is in the IGNITION position, as required by law in some localities.*

**CAUTION**

**Protect your vehicle against theft. After parking your motorcycle, lock the steering head and remove ignition key from switch. Failure to lock your motorcycle may result in theft and/or equipment damage. (00151a)**

**⚠WARNING**

**Do not operate vehicle with forks locked. Locking the forks restricts the vehicle's turning ability, which could result in death or serious injury. (00035a)**

**CAUTION**

**Do not lubricate barrel locks with petroleum based lubricants or graphite. Inoperative locks may result.**

**(00152a)**

**CAUTION**

**Do not switch lubricant brands indiscriminately because some lubricants interact chemically when mixed. Use of inferior lubricants can damage the engine. (00184a)**

**Ignition/Headlamp Switch/Fork Lock Positions: FLHTCUSE3**

| FUNCTION | LABEL | OPERATION |
|---|---|---|
| Key lock | LOCK | Locks the switch in either the FORK LOCK or ACCESS switch position. Remove the key for security. |
| | UNLOCK | Unlocks the switch. Unlocked, the switch can be rotated to any of the 4 positions. To prevent loss when riding, remove the key. |
| Switch | FORK LOCK | Insert the key, rotate the switch to FORK LOCK and press the switch down. Turn the key to LOCK and the fork is locked. To unlock the fork, insert and rotate the key to UNLOCK and the switch will pop up. |
| | OFF | When the switch is in the OFF postion, the ignition, lamps and accessories are off. |
| | IGNITION | When the switch is in the IGNITION position, the motorcycle can be started and all lamps and accessories will operate. |
| | ACCESS | When the switch is in the ACCESS position, all the lamps and accessories will operate but the engine can not be started. In ACCESS, the switch can be locked. |

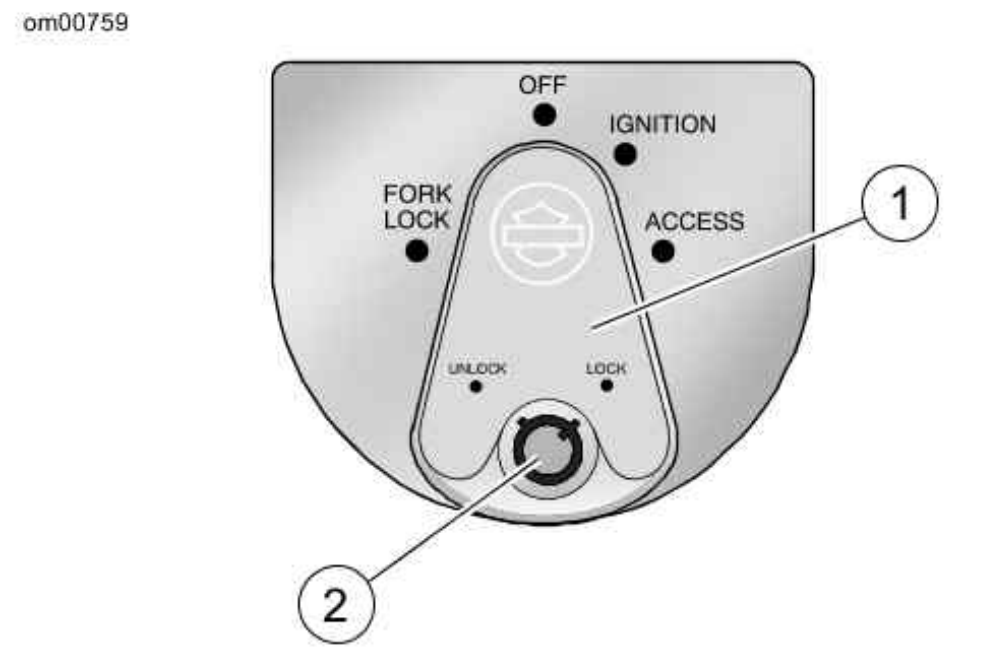


1. Ignition switch
2. Key lock

**Ignition/Headlamp Switch/Fork Lock: FLHTCUSE**

**CAUTION**

**Control wiring is routed inside handlebar and may be pinched or cut if controls are rotated too far. Electrical damage to control wiring can result. See Service Manual Supplement or see a Harley-Davidson dealer. (00363a)**

## Clutch Hand Lever

**⚠WARNING**

**Do not position fingers between hand control lever and handlebar grip. Improper hand positioning can impair control lever operation and cause loss of vehicle control, which could result in death or serious injury. (00032a)**

See Handlebar Controls: FLHTCUSE3. The clutch hand lever (1) is located on the left handlebar and is operated with the fingers of the left hand.

1. Squeeze the pull clutch hand lever in against handlebar grip to fully disengage clutch.
2. Shift to first gear using the gear shifter lever. See Shifting Gears: FLHTCUSE3.
3. Slowly release the clutch hand lever to engage clutch.

## Horn Switch

See Handlebar Controls: FLHTCUSE3. The horn is operated by pushing on the horn switch (2) located on the left handlebar control group.

## Headlamp Dimmer Switch

See Handlebar Controls: FLHTCUSE3. The headlamp dimmer switch (3) is located on the left handlebar. The switch has two positions to activate the headlamps high or low beams.

- Press the top of the headlamp dimmer beam switch to activate the high beam.
- Press the bottom of the headlamp dimmer switch to return to the low beam.

See Handlebar Controls: FLHTCUSE3. The (blue) high beam indicator lamp will illuminate when the high beam is on.

## Turn Signal Switches

See Handlebar Controls: FLHTCUSE3. Each handlebar control group contains a turn signal switch.

- The left turn signal switch (4) operates the left front and left rear flashing lamps.
- The right turn signal switch (10) operates the right front and right rear flashing lamps.

*NOTE:*

*Front turn signal lamps also function as running lamps.*

## Heated Hand Grip Control

See Handlebar Controls: FLHTCUSE3. Located at the end of the left hand grip, the heated hand grip control (5) can be turned from the OFF icon through 6 increasingly warm settings.

## Electric Starter Switch

*NOTE:*

*Off/Run switch MUST be in RUN position to operate engine.*

See Handlebar Controls: FLHTCUSE3. The electric starter switch (6) is located on the right handlebar control group. See Starting the Engine: FLHTCUSE3 for detailed operation procedures.

1. Put the engine OFF/RUN switch in the RUN position and the transmission in neutral. Neutral (green) indicator lamp should be illuminated.

2. See Handlebar Controls: FLHTCUSE3. Turn ignition/headlamp key switch to ON and push the START switch to operate starter motor.

## Engine OFF/RUN Switch

See Handlebar Controls: FLHTCUSE3. The engine OFF/RUN switch (7) turns the ignition power ON or OFF. The engine OFF/RUN switch is located on the right handlebar control. Push the top portion of the engine OFF/RUN switch to turn off ignition power and shut the engine off. Push the bottom portion of the engine OFF/RUN switch to turn on ignition power.

*NOTES:*

- *The engine OFF/RUN switch must be in the ON position to start or operate the engine.*
- *The engine OFF/RUN switch should be used to shut the engine off.*

1. To shut the engine off, push the top of the OFF/RUN switch to the OFF position.

2. See Handlebar Controls: FLHTCUSE3. Turn the ignition key to the OFF position to turn the ignition power completely OFF.

## Front Brake Lever

See Handlebar Controls: FLHTCUSE3. The front brake lever (8) applies mechanical pressure to the front brake master cylinder and the master cylinder applies hydraulic pressure to the front brake calipers.

## Throttle Control Grip

See Handlebar Controls: FLHTCUSE3. The throttle control grip (9) is located on the right handlebar control and is operated with the right hand.

## Cruise Control Resume/Set Switch

See Handlebar Controls: FLHTCUSE3. The cruise control resume/set switch (11) automatically maintains the speed of the motorcycle. Refer to Cruise Control: FLHTCUSE3.

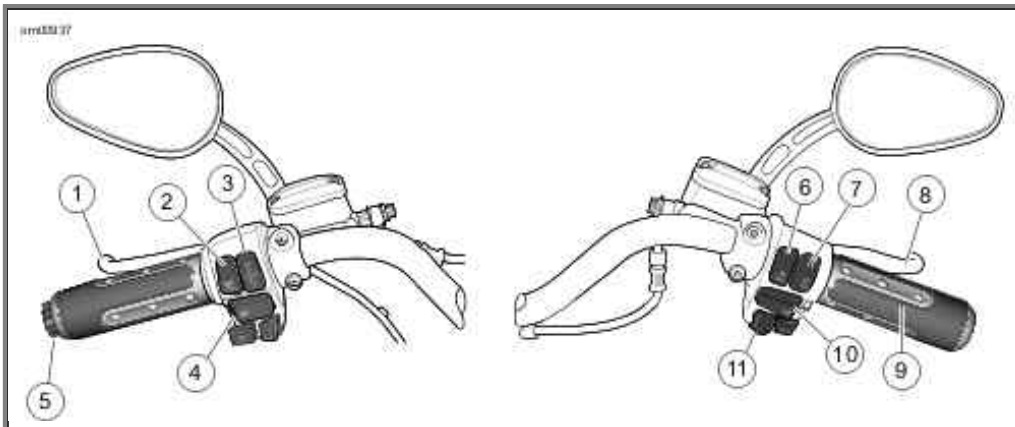


1. Clutch hand lever
2. Horn switch
3. Headlamp dimmer switch
4. Left turn signal switch
5. Heated hand grip control
6. Electric starter switch
7. Engine OFF/RUN switch
8. Brake hand lever
9. Throttle control grip
10. Right turn signal switch
11. Cruise control

**Handlebar Controls: FLHTCUSE3**

### Electronic Throttle Control (ETC)

Touring models are equipped with Electronic Throttle Control (ETC). Instead of using a mechanical cable connection to the throttle body, this technology uses redundant grip sensors to indicate rider requested throttle position to the Electronic Module (ECM). The ECM then regulates proper fuel/air intake and ignition timing based on the rider request. The grip sensor is manufactured with internal cams and spring retainer for natural feel and operation.

ETC operation is designed for rider safety and continued motorcycle operation, even in the event of a component failure. The Electronic Control Module monitors the status of the grip sensors, throttle plate actuation and airflow. If any problems are detected, the motorcycle will disable cruise control, illuminate the engine check lamp, and revert to one of the following fallback modes.

## ETC Limited Performance Mode

The rider will experience near-normal operation. The motorcycle will operate with provisions to guard against unintended acceleration.

## ETC Power Management Mode

The throttle plate actuator returns to an "idle detent" or "limp-home" position, which will provide enough torque to achieve speed of about 25 mph 40 kph . The motorcycle's response to grip sensor input is significantly reduced.

## ETC Forced Idle Mode

The throttle plate actuator is forced to a "fast idle" position, which will provide enough torque to crawl, but not enough torque to operate at traffic speeds.

## ETC Forced Shutdown Mode

The engine is forced to shut down.

### Turn Signal Switch Operation

The turn signal switches are used by the turn signal module to control turn signal operation based on vehicle speed, vehicle acceleration and turn completion.

Momentarily depress the desired turn signal switch. The turn signal lamps will begin and continue flashing until they are manually or automatically cancelled. As long as the motorcycle is stationary, the signals will flash.

*NOTES:*

- *If you are signaling to turn in one direction and you depress the switch for the opposite turn signal, the first signal is cancelled and the opposite side begins flashing.*
- *If you want to stop the lamps from flashing, briefly depress the turn signal switch a second time. The turn signal lamps will stop flashing.*

### Hazard Warning: FLHTCUSE3

## 4-Way Flashers

Should it be necessary to park along side a roadway, 4-way flashers can be activated as a hazard warning to traffic.

**Activate:** Turn the ignition key to ACCESS and simultaneously press the left and right turn signal switches.

**Deactivate:** Turn the ignition key ON and simultaneously press the left and right turn signal switches.

## 4-Way Flashers with Security System

If it should be necessary to leave the motorcycle parked along side a roadway unattended, the 4-way flashers can be activated and the Harley-Davidson Smart Security System can be armed. See Arming and Disarming: FLHTCUSE3.

## Speedometer

**⚠WARNING**

**Travel at speeds appropriate for road and conditions and never travel faster than posted speed limit. Excessive speed can cause loss of vehicle control, which could result in death or serious injury. (00008a)**

See Instruments: FLHTCUSE3. The speedometer (1) registers miles per hour (MPH) or, on International models, kilometers per hour (KPH).

The speedometer includes a single display window for the odometer, two trip-odometers, and a trip indicator.

Press the function button (7) to change the display window on the speedometer face to either odometer or trip-odometer.

## Odometer

See Warning Lamps: FLHTCUSE3. The odometer (7) registers the number of miles/kilometers the vehicle has traveled. Odometer will display mileage when bike is OFF when function button is pressed. There is no need to turn the bike on to check the odometer reading.

## Trip Odometer

Use the trip-odometer A (7) or trip-odometer B to register number of miles/kilometers traveled on a trip or between refueling.

See Warning Lamps: FLHTCUSE3. To reset the trip-odometer to zero, press button to reset speedometer display to the ODOMETER mode and hold the button in for approximately 2-3 seconds. The speedometer will switch to the trip-odometer mode and reset the display to zero.

**CAUTION**

**Never attempt to tamper with or alter the vehicle odometer. This is illegal. Tampering with or altering a vehicle odometer may cause equipment damage. (00160a)**

## Tip Indicator

**⚠WARNING**

**If tip occurs, check all controls for proper operation. Restricted control movement can adversely affect the**

**performance of the brakes, clutch or ability to shift, which could result in loss of vehicle control and death or serious injury. (00350a)**

Should motorcycle be tipped over, the word "tip" will appear in the odometer window. Engine will not start until reset. To reset, cycle ignition/headlamp key switch ON-OFF-ON.

## Tachometer

---

**CAUTION**

**See OPERATING RECOMMENDATIONS section. Do not operate the engine above maximum safe RPM as shown under OPERATION (red zone on tachometer). Lower the RPM by upshifting to a higher gear or reducing the amount of throttle. Failure to lower RPM may cause equipment damage. (00159a)**

See Instruments: FLHTCUSE3. The tachometer (2) measures the engine speed in revolutions per minute (RPM).

## Voltmeter

---

See Instruments: FLHTCUSE3. The voltmeter (3) indicates electrical system voltage and is found on the front panel of the fairing. With the engine running above 1500 RPM, the voltmeter should register 13-14.5 volts with battery at full charge.

## Oil Pressure Gauge

---

See Instruments: FLHTCUSE3. The oil pressure gauge (4) indicates engine oil pressure and is found on the front panel of the fairing. Engine oil pressure will normally vary from 5 PSI 34 kN/m2 at idle speed to 30-38 PSI 207-262 kN/m2 at 2000 RPM when engine is at normal operating temperature of 230° F 110° C .

## Air Temperature Gauge

---

See Instruments: FLHTCUSE3. The air temperature gauge (5) indicates the ambient air temperature in degrees fahrenheit. This gauge is found on the front panel of the fairing.

## Fuel Gauge

---

See Instruments: FLHTCUSE3. The fuel gauge (6) indicates the approximate amount of fuel in the fuel tanks.

## Clock (In Radio)

---

The clock runs continuously as long as there is battery power. To reset clock, refer to Audio System: FLHTCUSE3.

## Fuel Range Function

---

The fuel range function shows the approximate mileage available with the amount of fuel left in the fuel tank.

1. With the ignition switch in the ACC or IGNITION position, press function switch until fuel range function is displayed, as indicated by the letter 'r' in the left side of the odometer display. The calculated remaining distance (miles or kilometers) to empty is displayed, based on the amount of fuel in tank. Range can be accessed at any time using the function switch.

2. When the low fuel warning lamp illuminates, the range feature will automatically be displayed in the odometer unless this automatic pop-up feature is disabled by a press and hold of the function switch while in range display mode. Automatic range pop-up feature will show that it is disabled by blinking twice. Likewise, automatic range pop-up can be reactivated by a press and hold of the function switch. Range will blink once when the automatic pop-up feature is reenabled.

   *NOTE:*

   *When the low fuel warning lamp turns on, there is approximately 1 gallon 3.8 liters of fuel remaining in the tank. Refuel as soon as possible.*

3. After the range calculation reaches 10 miles 16 kilometers remaining, the range display will show "r Lo" to indicate that the vehicle will shortly run out of fuel.

4. The range display is only updated when the vehicle is moving 10 mph 16 km/h or greater.

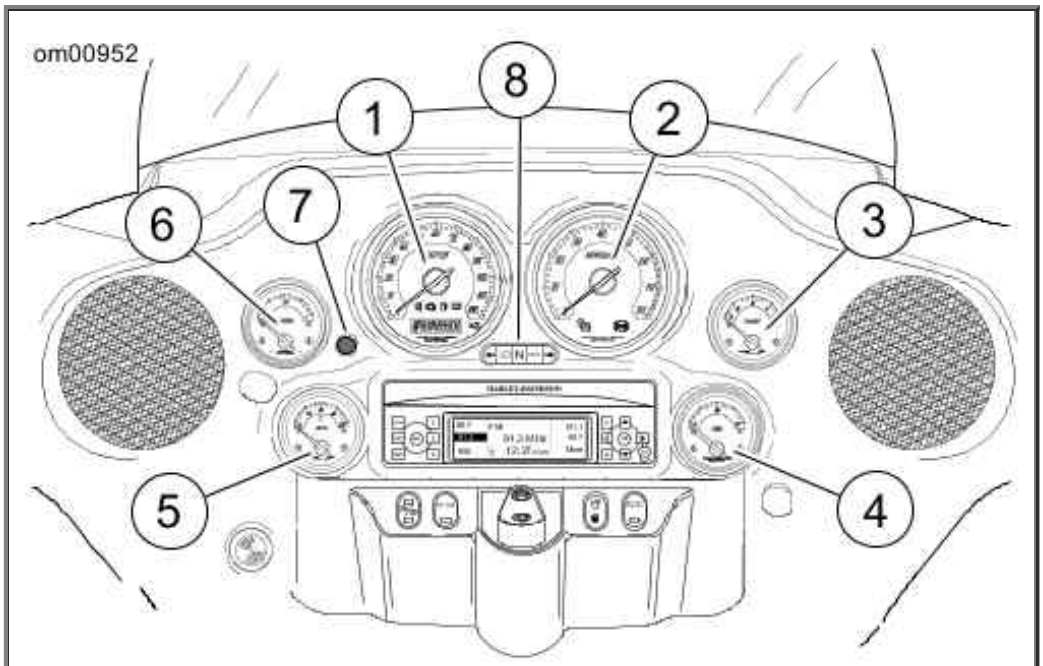


1. Speedometer
2. Tachometer
3. Voltmeter
4. Oil pressure
5. Air temperature
6. Fuel level
7. Function button
8. Indicator lamps

**Instruments: FLHTCUSE3**

## Indicator Lamps

See Indicator Lamps. Five indicator lamps are provided.

- The green TURN indicators will flash when turn signals are activated; therefore, flashing indicates the chosen turn direction. When the 4-way hazard flashers are operating, both turn indicators will flash simultaneously.
- The blue BEAM indicator lamp, when lit, signals high beam headlamp operation.
- The green NEUTRAL lamp, when lit, signals the transmission is in neutral gear.
- The red OIL indicator lamp, when lit, signals that oil is not circulating through the engine.

*NOTE:*

*The OIL indicator lamp will glow when the ignition is turned on prior to starting engine. With engine running, lamp should be off when engine speed is above idle.*

Several other circumstances that could cause the red oil indicator lamp to signal, include the following:

- If the oil pressure indicator lamp does not go off at speeds above idling, it is usually because of an empty oil tank or diluted oil.
- In freezing weather the oil feed may clog with ice and sludge, preventing oil circulation.
- A grounded oil signal switch wire.
- A faulty signal switch.
- A damaged or improperly installed check valve.
- Trouble with the pump.

**CAUTION**

**If the oil pressure indicator lamp remains lit, always check the oil supply first. If the oil supply is normal and the lamp is still lit, stop the engine at once and do not ride further until the trouble is located and the necessary repairs are made. Failure to do so may result in engine damage. (00157a)**

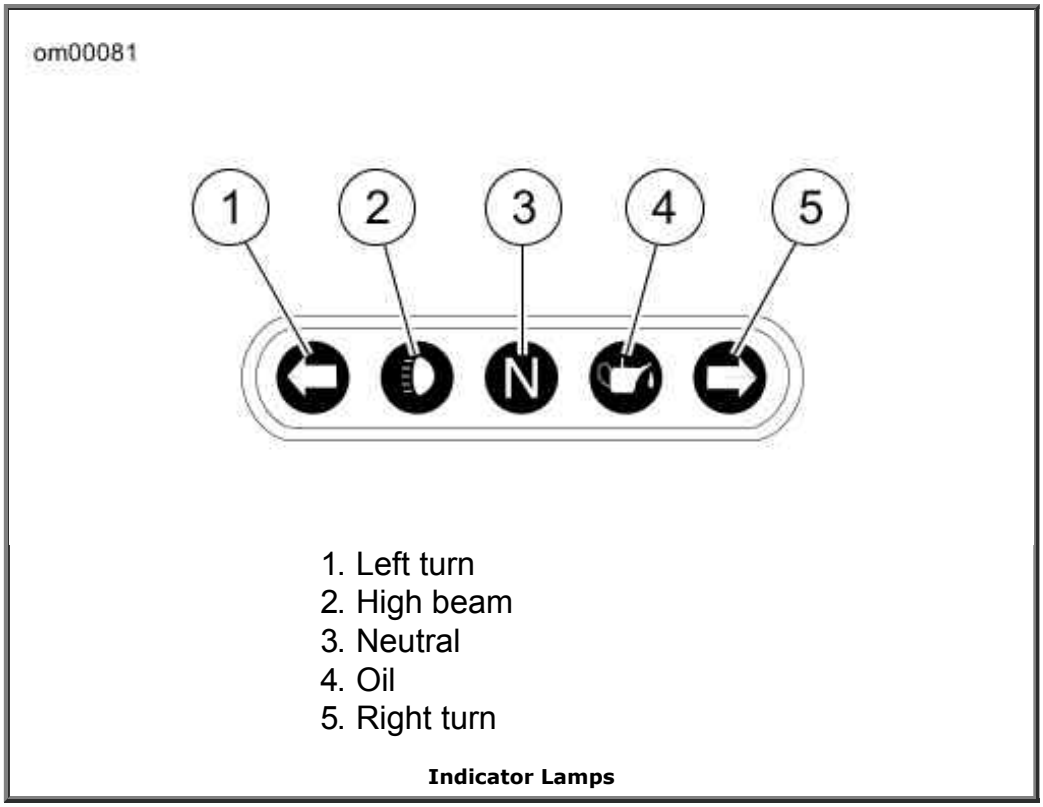


**Indicator Lamps**

**Warning Lamps: FLHTCUSE3**

## Engine Check Lamp

See Warning Lamps: FLHTCUSE3. The engine check lamp (1) indicate whether or not the engine/engine management system is operating normally. The engine lamp color is amber.

The engine lamp normally comes on when the bike's ignition is first turned on and remains on for approximately 4 seconds, as the engine management system runs a series of self-diagnostics.

If the engine lamp comes on at any other time, see a Harley-Davidson dealer.

## Low Fuel Lamp

See Warning Lamps: FLHTCUSE3. The low fuel lamp (6) illuminates to indicate that you have approximately 1 gallon 3.8 liters of gasoline left in the tank. The low fuel lamp color is amber.

## Charging Lamp

See Warning Lamps: FLHTCUSE3. The battery charging icon (5) illuminates to indicate either overcharging or undercharging of the battery. Refer to Battery: General.

## Security Lamp

See Warning Lamps: FLHTCUSE3. The security lamp (2) will illuminate when the security system is armed. Refer to Harley-Davidson Smart Security System.

## Cruise Control Equipped Models

Cruise control equipped models feature two additional indicator lamps.

- An orange lamp on the cruise control rocker switch on the inner fairing cap indicates when the cruise control is ON or OFF.
- See Warning Lamps: FLHTCUSE3. When the cruise control icon in the tachometer face is orange it indicates that cruise control is ON but disengaged. When the icon is green it indicates that the cruise control is ON and engaged.

## ABS Lamp

See Warning Lamps: FLHTCUSE3. The amber ABS indicator lamp begins to flash at key ON to indicate that the system is operational. It continues to flash until motorcycle speed exceeds 3 mph 5 km/h . Continuous illumination of the lamp will only occur when ABS detects that the system is malfunctioning. In the diagnostic mode, the lamp will also illuminate to indicate the presence of diagnostic trouble codes (DTCs). See a Harley-Davidson dealer for service.

**⚠WARNING**

**If ABS lamp remains on continuously, the ABS is not operating. The standard brake system is operational, but wheel lock up can occur. Contact a Harley-Davidson Dealer to have ABS repaired. A locked wheel will skid and can cause loss of vehicle control, which could result in death or serious injury. (00361a)**

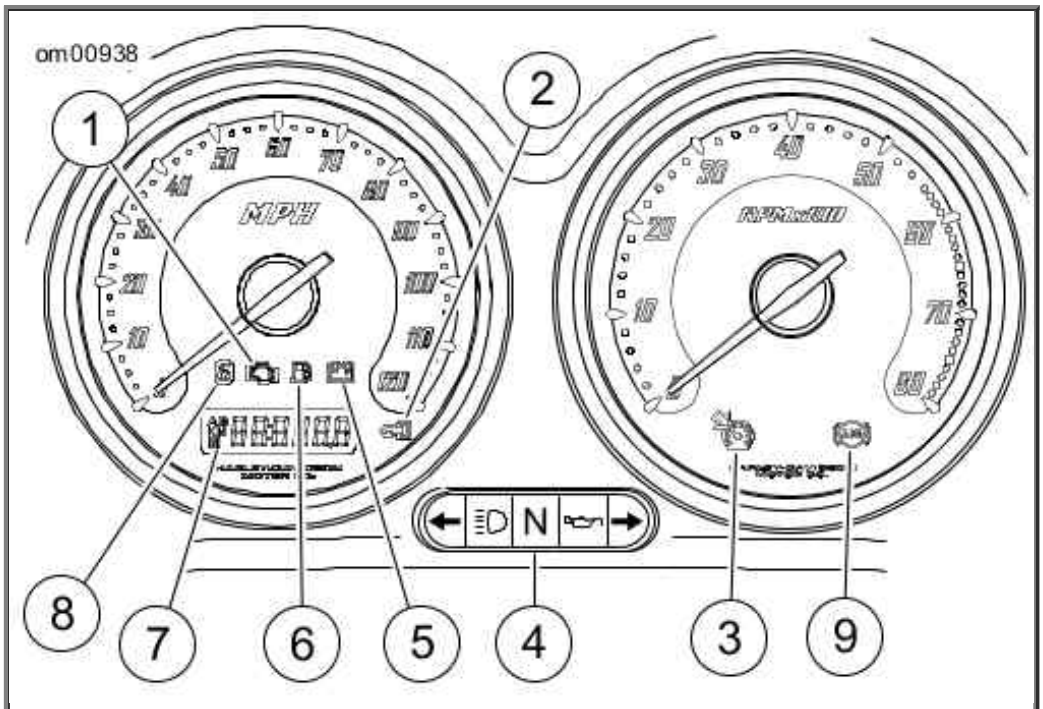


1. Check engine
2. Security system lamp
3. Cruise ON
4. Indicator lamps
5. Charging
6. Low fuel warning
7. Odometer/trip-odometer
8. Overdrive (6th speed)
9. ABS lamp

**Warning Lamps: FLHTCUSE3**

## Gear Shift Lever: FLHTCUSE3

---

**CAUTION**

**The clutch must be fully disengaged before attempting a gear shift. Failure to fully disengage the clutch can result in equipment damage. (00182a)**

The gear shift lever is located on the left side of the motorcycle and is operated with the left foot.

1. Push the gear shift lever all the way down (full stroke) to shift the transmission to the next lower gear.

2. Lift the gear shift lever all the way up (full stroke) to shift the transmission to the next higher gear.

   *NOTES:*
   - *Release the gear shift lever after each gear change.*
   - *The lever must return to its central position before another gear change can be made.*

Neutral is located between first and second gear. The green neutral indicator lamp on the dash will illuminate when the transmission is in neutral.

1. To shift from first gear to neutral, lift the gear shift lever 1/2 of its full stroke.

2. To shift from second gear to neutral, push the gear shift lever downward 1/2 of its full stroke.

When the motorcycle is standing still and the engine is not running, shifting gears requires a different technique. Before shifting in this condition, move the motorcycle backward and forward with the clutch fully disengaged (clutch lever pulled in). While maintaining slight pressure on the shift lever, shift from one gear to another.

Even with the engine running and the motorcycle standing still, difficulty may be experienced in shifting gears. This difficulty occurs because transmission gears are not turning and shifting parts are not lined up to permit engagement.

**CAUTION**

**When difficulty of shifting gears is experienced, do not under any circumstances, attempt to force the shift. The results of such abuse will be a damaged or broken shifter mechanism. (00161a)**

See Shifting Gears: FLHTCUSE3 for more information.

## Heel-Toe Shift Lever: FLHTCUSE3

---

See Heel-Toe Foot Shift Pattern: FLHTCUSE3. The FLHTCUSE3 is equipped with a heel-toe shift lever. With this lever, upshifts can be made with the heel of the left foot. Downshifts can be made with the toe.

- Pushing heel-toe shift lever all the way down (full stroke) shifts the transmission to the next lower gear.
- Lifting the heel-toe shift lever all the way up (full stroke) shifts the transmission into the next higher gear.

Release the heel-toe shift lever after each gear change. This allows the lever to return to its central position before another gear change can be made.

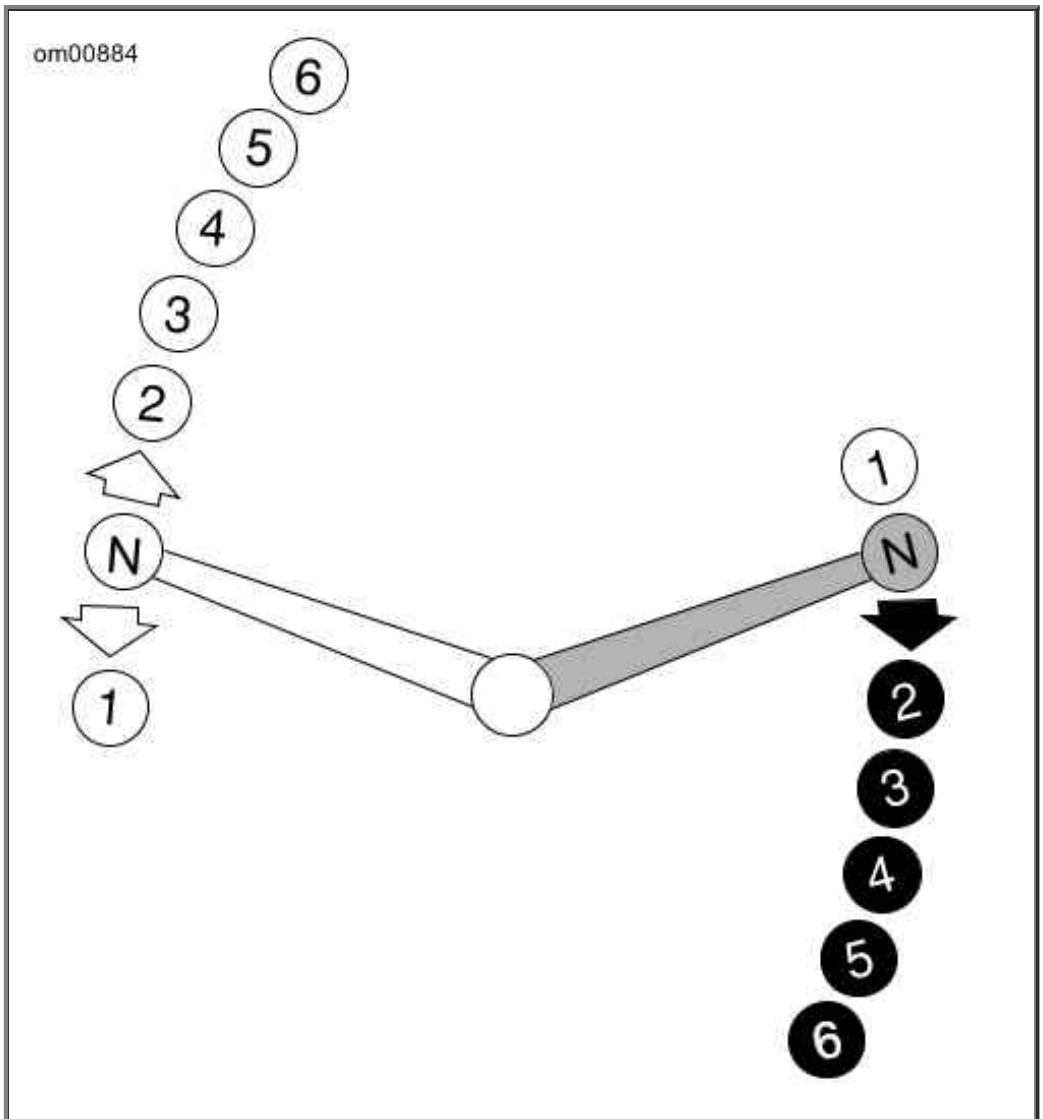

Heel-Toe Foot Shift Pattern: FLHTCUSE3

### Brake System: ABS-Equipped Models

## General

The rear brake pedal controls the rear wheel brake and is located on the motorcycle's right side. Operate the rear brake pedal with the right foot.

The front brake hand lever controls the front wheel brake and is located on the right handlebar. Operate the hand lever with the fingers of the right hand.

**⚠WARNING**

**Do not position fingers between hand control lever and handlebar grip. Improper hand positioning can impair control lever operation and cause loss of vehicle control, which could result in death or serious injury. (00032a)**

## Anti-lock Brake System (ABS)

Harley-Davidson's Anti-Lock Brake System assists the rider in maintaining control when braking in a straight-line emergency situation. ABS operates independently on front and rear brakes to keep the wheels rolling and prevent uncontrolled wheel lock-ups either on dry pavement or on slick surfaces such as gravel, leaves or when riding in wet conditions.

## ABS: How It Works

The ABS monitors sensors at the front and rear wheels to determine wheel speed. If the system detects one or both wheels are slowing down too quickly, which indicates they are close to locking, or if the deceleration rate does not match a criteria stored in memory, the ABS reacts. The system rapidly opens and closes valves to modulate the brake pressure being applied by the rider. During ABS activation, the system provides the electronic equivalent of manually pumping the brakes and is capable of cycling up to seven times per second.

The rider will recognize ABS activation by the slight pulsing sensation in the hand lever or the rear brake pedal. The pulsing sensation may also be accompanied by a clicking sound from the ABS module. Both are the result of normal operation. Refer to ABS Symptoms and Conditions.

## ABS: How To Use

While an advantage in emergency braking, ABS is not a substitute for safe riding. The safest way to stop a motorcycle is upright with both wheels straight.

Harley-Davidson ABS is a manual assist system. When in an emergency stopping situation, maintain pressure on the brakes through all ABS events. Do not modulate or "pump" the brake controls. The wheels won't lock until the end of the stop when motorcycle speed reaches approximately four miles per hour and ABS is no longer needed.

**⚠WARNING**

**ABS cannot prevent lockup of rear wheel due to engine braking. ABS will not aid in cornering or on loose/uneven surfaces. A locked wheel will skid and can cause loss of vehicle control, which could result in death or serious injury. (00362a)**

More information is available at www.harley-davidson.com/abs.

## ABS: Tires and Wheels

ABS motorcycles must always use tires and wheels that are the same as the original equipment. The ABS monitors the rotational speed of the wheels through individual wheel speed sensors. Changing to different diameter wheels or different sized tires can alter the rotational speed. This can upset the calibration of the ABS and have an adverse effect on its ability to detect and prevent uncontrolled wheel lockups. Tire inflation pressure that is significantly low also can have an adverse effect.

**ABS Symptoms and Conditions**

| SYMPTOM | CONDITION |
|---|---|
| Pulsing | Normal condition |

| | |
|---|---|
| Pulsing brake lever or pedal during an ABS event | Normal condition. |
| Clicking sound during an ABS event | Normal condition. |
| ABS lamp flashing | Normal condition - key turned to IGNITION - speed under 3 mph 5 km/h . |
| Perceived "surge" while braking | Normal condition - noticeable when braking with one brake (front only or rear only). Result of a reduction in deceleration which can be caused by cracks or bumps in road, engine braking (high engine RPMs causing the rear wheel to slow down), hard braking at slow speeds, and other conditions. |
| Temporarily stiff rear brake pedal | Normal condition - engine braking (high engine RPMs causing the rear wheel to slow down) or down shifting can activate ABS. If applying the rear brake at the same time or immediately after, the ABS may be closing a valve to prevent pressure to the rear brake. |
| Tire chirp | Normal condition - depending on surface, tire can chirp without locking the wheel. |
| Black mark on pavement | Normal condition - depending on surface, tire can leave a black mark without locking the wheel. |
| Wheel lock at low speed | Normal condition - ABS will not activate on front wheel below 3 mph 5 km/h or on rear wheel below 5 mph 8 km/h . |

## Jiffy Stand

**⚠WARNING**

**Always park motorcycle on a level, firm surface. An unbalanced motorcycle can fall over, which could result in death or serious injury. (00039a)**

The jiffy stand is located on the left side of the motorcycle and swings outward to support the motorcycle for parking.

**⚠WARNING**

**The jiffy stand locks when placed in the full forward (down) position with vehicle weight on it. If the jiffy stand is not in the full forward (down) position with vehicle weight on it, the vehicle can fall over which could result in death or serious injury. (00006a)**

**⚠WARNING**

**Be sure jiffy stand is fully retracted before riding. If jiffy**

**stand is not fully retracted, it can contact the road surface causing a loss of vehicle control, which could result in death or serious injury. (00007a)**

## Jiffy Stand Interlock: International Models

Some international models are equipped with a jiffy stand interlock feature.

If the rider attempts to start the engine or pushes the starter button while the transmission is in gear and the jiffy stand is down, then the jiffy stand interlock system will not permit the engine to run. The message "SidE StAnd" will scroll across the odometer to indicate this to the rider. Raising the jiffy stand (or putting the transmission in neutral) will permit the engine to run and clear the message.

If the jiffy stand falls out of the fully retracted position while riding at speeds greater than 10 mph 15 kph , then the jiffy stand interlock system will maintain engine operation and alert the rider about this by illuminating the indicators (flash twice) and scroll the message "SidE StAnd" across the odometer. The message will remain until the system detects the jiffy stand in the fully retracted position again. The rider may continue to operate the vehicle while in this mode.

The rider may clear the text messages at any time by pressing the function switch once while the vehicle is powered up.

*NOTE:*

*If the operation of raising the jiffy stand and putting the transmission in gear is rapidly executed, the jiffy stand bouncing off the frame could cause the jiffy stand interlock system to activate and stop the engine.*

## Rear View Mirrors

**⚠WARNING**

**Objects in mirrors are closer than they appear. Use caution when judging distance of objects in mirrors. Failure to judge correct distances could result in death or serious injury. (00033a)**

Your vehicle is equipped with two convex rear view mirrors.

This type of mirror is designed to give a much wider view to the rear than a flat mirror. However, cars and other objects seen in this type of mirror will look smaller and farther away than they actually are.

- Use caution when judging the size or relative distance of objects seen in rear view mirrors.
- Always adjust the rear view mirrors to clearly reflect the area behind the motorcycle before riding.

*NOTE:*

*Adjust mirrors so you can see a small portion of your shoulders in each mirror. This will help you establish the relative distance of vehicles to the rear of your motorcycle.*

## Fork Lock: FLHTCUSE3

**CAUTION**

**Protect your vehicle against theft. After parking your motorcycle, lock the steering head and remove ignition key from switch. Failure to lock your motorcycle may result in theft and/or equipment damage. (00151a)**

*NOTE:*

*The fork lock is integrated into the ignition switch.*

Using the fork lock immediately after parking your motorcycle will discourage unauthorized use or theft when parking your motorcycle. For fork lock detail, refer to Ignition/Headlamp Switch/Fork Lock Positions: FLHTCUSE3.

**⚠WARNING**

**Do not operate vehicle with forks locked. Locking the forks restricts the vehicle's turning ability, which could result in death or serious injury. (00035a)**

## To Lock Fork

*NOTE:*

*Forcing the switch into the locked position can damage the switch.*

1. Turn fork to **full left** position.
2. Insert key into the key lock.
3. Push down on knob and turn left to FORK LOCK position.
4. Turn key to LOCK position and remove key.

### Inner Fairing Cap Rocker Switches: FLHTCUSE3

## CRUISE/SPOT

See Switch Indicators: FLHTCUSE3. The CRUISE/SPOT rocker switch (1) is a dual purpose switch.

**CRUISE:** Rock the switch forward to activate cruise control. The LED will illuminate when cruise control is active.

Rock the switch forward a second time to turn cruise OFF.

**SPOT:** Rock the switch rearward to turn the spots or auxiliary lamps ON. The LED will illuminate when the auxiliary lamps are lit. See Auxiliary Lamps: FLHTCUSE3.

Rock the switch rearward a second time to turn the auxiliary lamps OFF.

## SPKR

The SPKR (Speaker) switch (2) is a three position switch which selects the rider or passenger speakers or the headsets for the Advanced Audio Sound System. See Speaker Controls: FLHTCUSE3.

## Power Lock

The rocker switch identified by a locked and unlocked padlock icon (3) is a power lock switch for the saddlebags and Tour-Pak. See Power Locks: FLHTCUSE3.

## ACC

The ACC (Accessory) rocker switch (4) controls the power to the accessory connector located under the seat. Various accessories available from the Genuine Motor Accessories and Genuine Motor Parts are powered through this connector. See Accessory Switch: FLHTCUSE3.

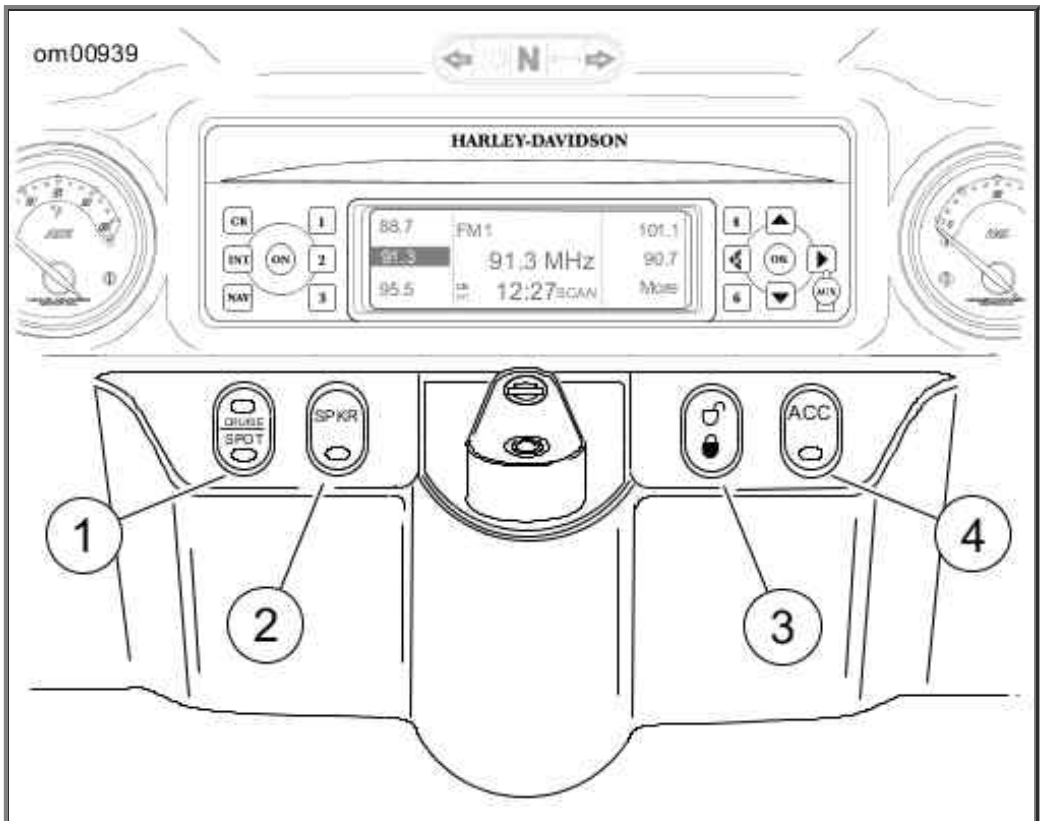


1. Cruise control (CRUISE) and auxiliary (SPOT)
2. Speakers
3. Lock saddlebags/Tour-Pak
4. ACC (ACCESSORY)

**Switch Indicators: FLHTCUSE3**

### Accessory Switch: FLHTCUSE3

See Switch Indicators: FLHTCUSE3. The accessory (ACC) rocker switch (4) is located in front of the rider on the inner fairing cap. Rock the switch rearward to turn the accessories circuit ON.

The LED in the switch is illuminated when the accessories circuit is ON.

**CAUTION**

**It is possible to overload your motorcycle's charging system by adding too many electrical accessories. If your combined electrical accessories operating at any one time consume more electrical current than your vehicle's charging system can produce, the electrical consumption can discharge the battery and cause vehicle electrical system damage. See a Harley-Davidson dealer for advice about the amount of current consumed by additional electrical accessories, or for necessary wiring changes. (00211b)**

### Auxiliary Lamps: FLHTCUSE3

See Switch Indicators: FLHTCUSE3. Use the auxiliary lamp switch (1) to turn ON the auxiliary lamps as required.

*NOTES:*

- *The auxiliary lamp switch (SPOT) is on the left side of the ignition/headlamp key switch on fairing cap.*
- *The auxiliary lamps (SPOT) do not work when the headlamp is on high beam.*

### Heated Seat: FLHTCUSE3

## Switch Controls

See Heated Seat Switches: FLHTCUSE3. The heated seat controls for the rider (1) and passenger (2) are three position rocker switches.

**High Heat:** Rock the switch at the top for high heat.

**OFF:** The OFF position is in the middle.

**Low Heat:** Rock the switch at the bottom for low heat.

*NOTE:*

*Allow 8 to 10 minutes for the seat to warm up.*

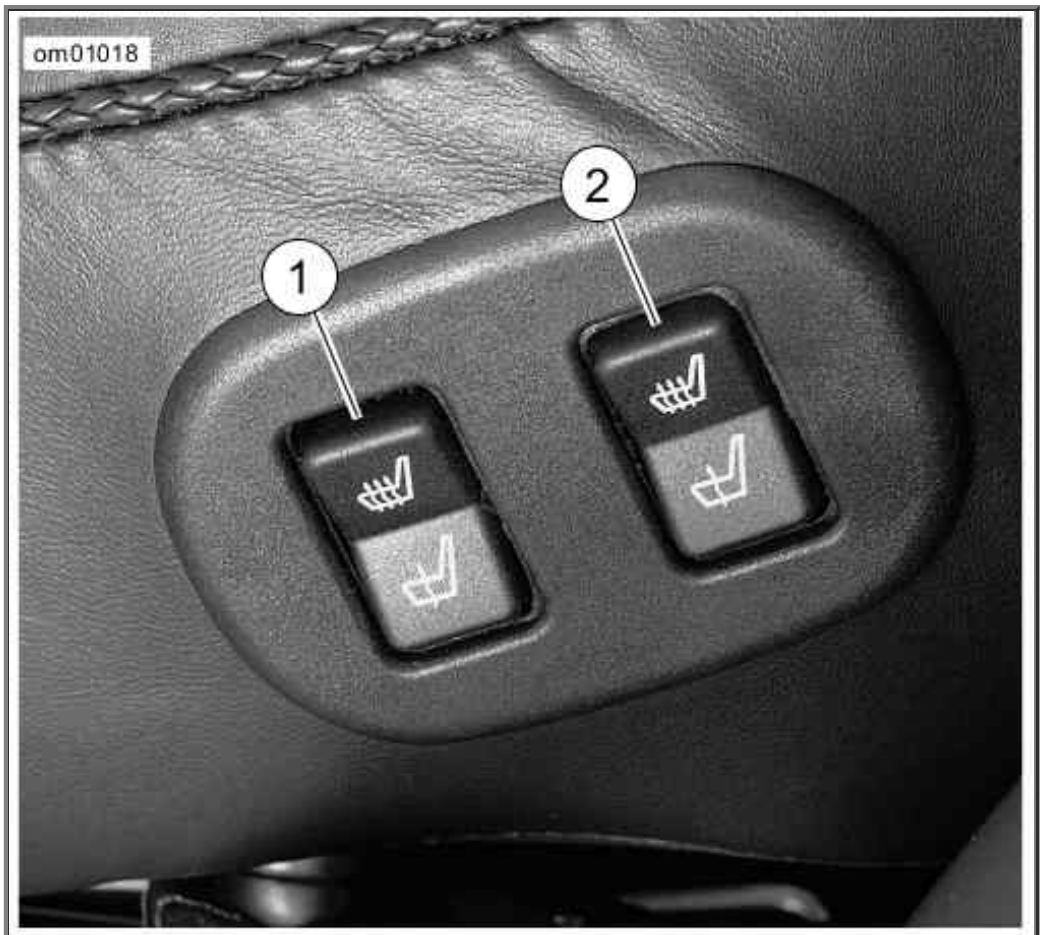


1. Rider switch
2. Passenger switch

**Heated Seat Switches: FLHTCUSE3**

## Cigarette Lighter

See Cigarette Lighter. A cigarette lighter is located on the left side of the fairing. To operate, press lighter into socket. The lighter will pop out when hot.

The lighter is not intended to be used as a power port for electrical devices. Damage to the lighter receptacle may occur.

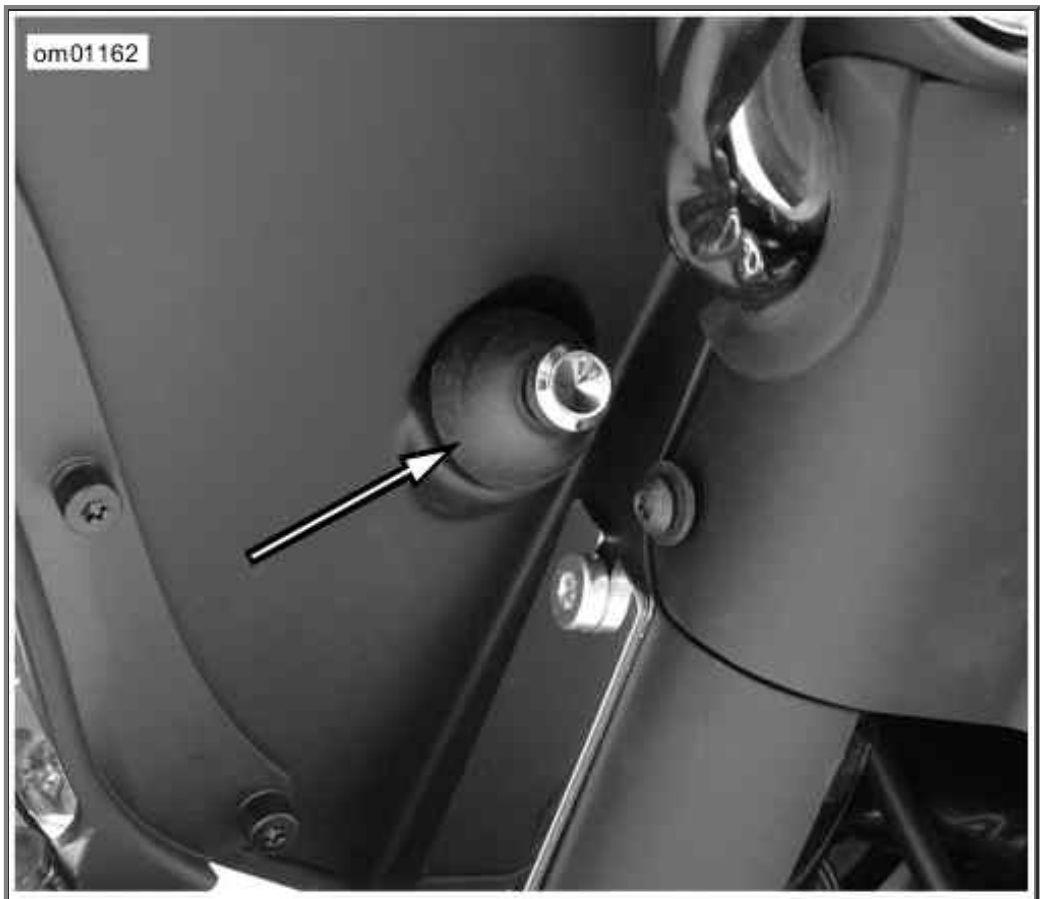


Cigarette Lighter

### Luggage

**WARNING**

**Do not exceed the motorcycle's Gross Vehicle Weight Rating (GVWR) or Gross Axle Weight Rating (GAWR). Exceeding these weight ratings can affect stability and handling, which could result in death or serious injury. (00016e)**

GVWR is the sum of the weight of the motorcycle, accessories, and the maximum weight of the rider, passenger and cargo that can be safely carried.

GAWR is the maximum amount of weight that can be safely carried on each axle.

The GVWR and GAWR is shown on the information plate, located on the frame steering head.

### Power Locks: FLHTCUSE3

## Power Lock Switch

See Switch Indicators: FLHTCUSE3. The locks on the saddlebags and Tour-Pak can be electrically locked and unlocked. The power lock is operated with a rocker switch (3) on the inner fairing cap. The rocker switch is labeled with padlock icons.

*NOTE:*

*When needed, the ignition key can be used to manually override the power locks and unlock the saddlebags and Tour-Pak.*

## Locking

1. Close saddlebag lids and Tour-Pak lid. Secure latches.
2. With the ignition switch in IGNITION or ACCESS, rock the switch rearward to LOCK.

   *NOTES:*
   - *To avoid the latches being locked with the saddlebag/latches and Tour-Pak lids open, do not rock the power lock switch to lock until the lids are closed and latched.*
   - *Power locks do not operate the fork lock or ignition switch. Keys are required to lock and unlock the fork and ignition switch.*

## Unlocking

1. With the ignition switch in IGNITION or ACCESS, rock the switch forward to UNLOCK.
2. Open the saddlebags with the latch. Open the Tour-Pak by undoing both latches.

### Power Lock Fob

## General

See Power Lock Fob. The fob remotely operates the power locks in the saddlebags and Tour-Pak. The key on the fob may be used to manually lock/unlock the ignition switch, saddlebags, and Tour-Pak on the vehicle.

## Entering Program Mode

*NOTE:*

*To program a fob, it is necessary to put the receiver on the bike into program mode.*

1. Turn ignition knob to IGNITION or ACCESSORY.

   *NOTES:*
   - *Verify that both saddlebags and the tour-pak power locks are functioning correctly when using the saddlebag/Tour-Pak lock switch.*
   - *Leave the Tour-Pak lid open during programming to see the Tour-Pak power lock hook move during lock and unlock events.*

2. See Saddlebag/Tour-Pak Lock Switch. Press UNLOCK on the saddlebag/Tour-Pak lock switch to set locks to the unlocked position. Wait 5 seconds.
3. Press LOCK once on the saddlebag/Tour-Pak lock switch.
4. Press UNLOCK on the saddlebag/Tour-Pak lock switch 3 times in a row.
5. Press LOCK on the saddlebag/Tour-Pak lock switch 3 times in a row.

6. Press and hold UNLOCK for 5 seconds. After 5 seconds, the actuators will cycle the locks to locked then back to unlocked. The receiver is now beginning its program cycle.

7. Wait 11 more seconds. The actuators will once again cycle to lock then back to unlock. The receiver is now in program mode.

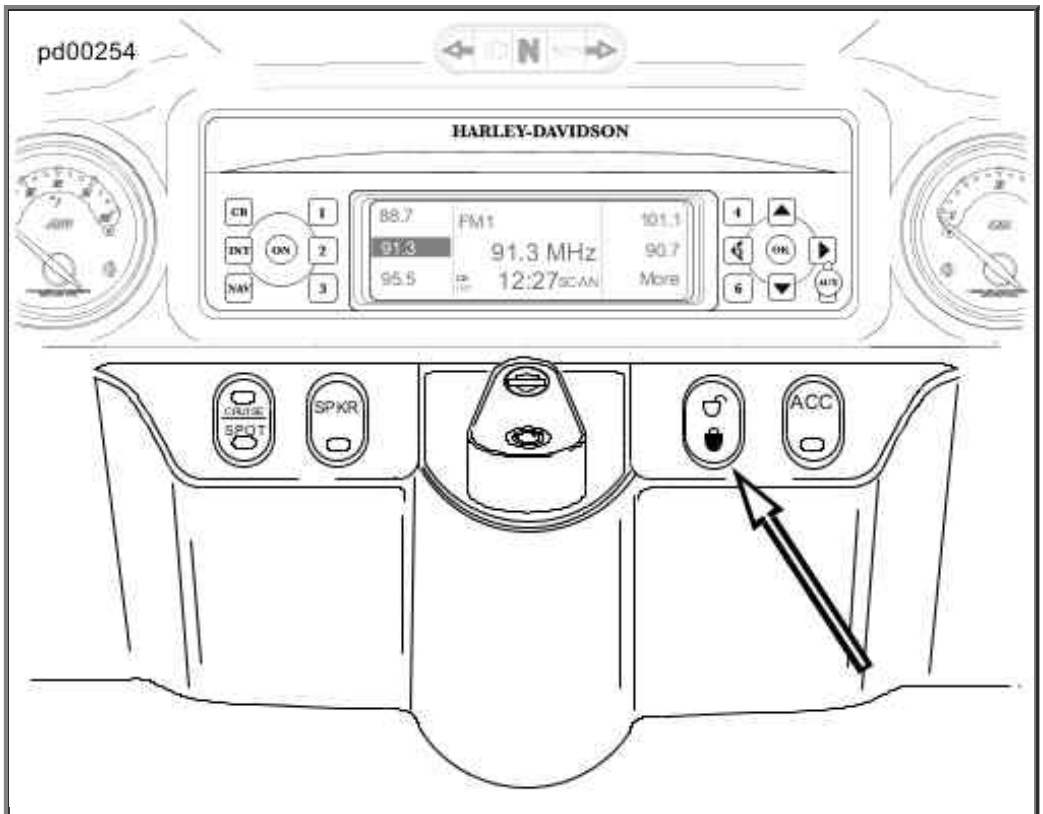

Saddlebag/Tour-Pak Lock Switch

## Program Mode

---

*NOTE:*

*Pressing lock or unlock on the saddlebag/Tour-Pak lock switch during program mode will cause program mode to end.*

1. See Power Lock Fob. Press and release the LOCK button on fob number 1 repeatedly until you hear the actuators lock. Verify the fob is programmed by pressing UNLOCK.

2. After fob number 1 is programmed, wait 5 seconds until the actuators cycle to lock then back to unlock. Now program fob number 2.

3. Repeat steps 1 and 2 to program fob number 2.

4. The receiver will remain in program mode for 30 seconds. Repeat steps 1 and 2 to program any other fobs.

5. To exit program mode, perform one of the following:

    a. Wait 30 seconds.

    b. Press lock or unlock on the saddlebag/Tour-Pak lock switch.

    c. Remove power lock fuse.

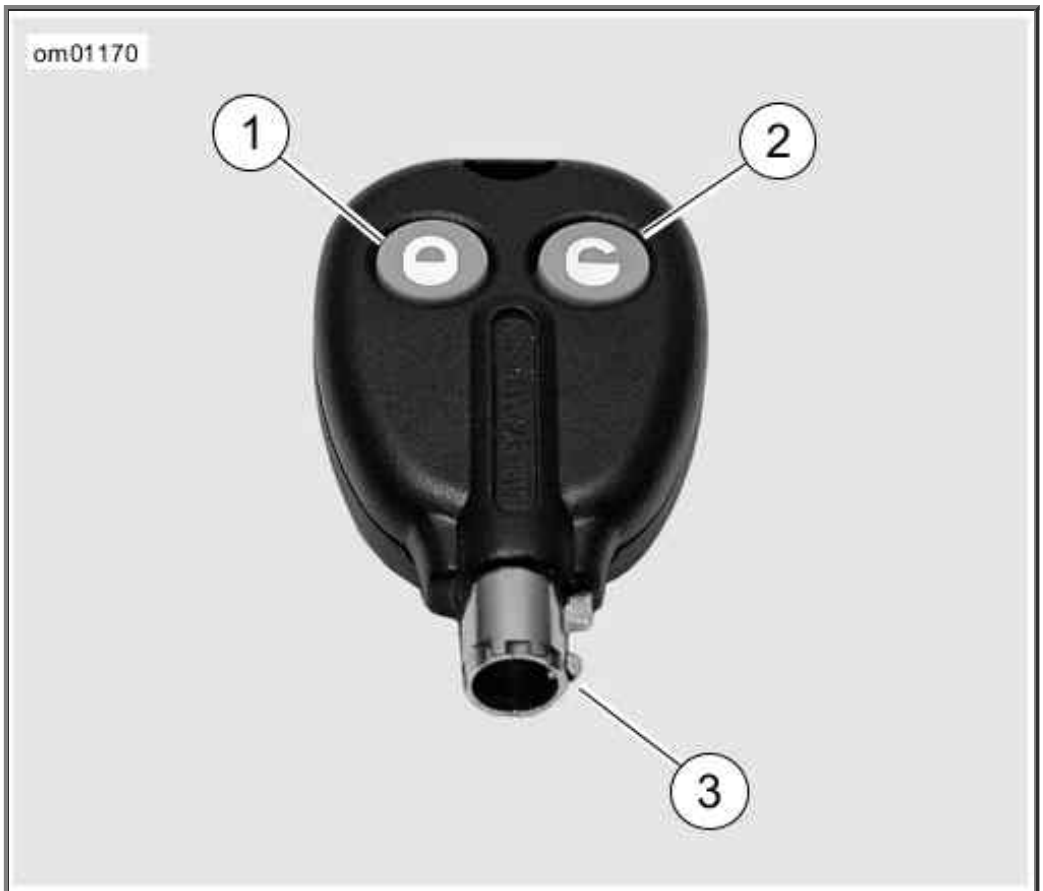


1. Lock
2. Unlock
3. Key

**Power Lock Fob**

## Replacing the Battery

1. See Power Lock Fob Battery. Slowly turn a thin screwdriver blade in the thumbnail slot (1) on the side of the fob to separate the two halves.
2. Remove the battery (2) and discard.

   *NOTE:*

   *Dispose of old battery in accordance with local regulations.*

3. Install a **new** battery (Panasonic 2032 or equivalent) with the positive (+) side facing up.
4. Align the two halves of the fob and snap together.

1. Thumbnail slot
2. Battery

**Power Lock Fob Battery**

### Luggage Power Locks

## FCC Regulations

FCC ID: VCR421860, IC ID: 7158A-42160

This device complies with Part 15 of the FCC Rules and with RSS-210 of Industry Canada rules. Operation is subject to the following two conditions:

(1) This device may not cause harmful interference, and (2) This device must accept any interference received, including interference that may cause undesired operation.

**WARNING:** Changes or modifications not expressively approved by the party responsible for compliance could void the user's authority to operate the equipment.

The term "IC:" before the radio certification number only signifies that Industry Canada technical specifications were met.

### Tour-Pak: FLHTCUSE3

**⚠CAUTION**

**Do NOT pull on any electrical wires. Pulling on electrical**

**wires may damage the internal conductor causing high resistance, which may result in minor or moderate injury. (00168a)**

*NOTES:*

- *To lock/unlock the Tour-Pak with the power lock rocker switch in the inner fairing cap, refer to Power Locks: FLHTCUSE3.*
- *To lock/unlock the Tour-Pak with the power lock fob, refer to Power Lock Fob.*

## Lock/Unlock With Ignition Key

---

**Lock:** See Tour-Pak Lock and Draw Catch. Insert the key (1) into the neutral position (2) of the Tour-Pak lock (3) and turn the key 1/4th of a turn to the right. Return the key to the neutral position to remove the key.

**Unlock:** Insert the key in the neutral position of the Tour-Pak lock and turn the key 1/4th of a turn to the left. Return the key to the neutral position to remove the key.

## Open/Close

---

**Open:** With the Tour-Pak unlocked, undo both latches and lift.

**Close:** Close the lid. Secure both latches.

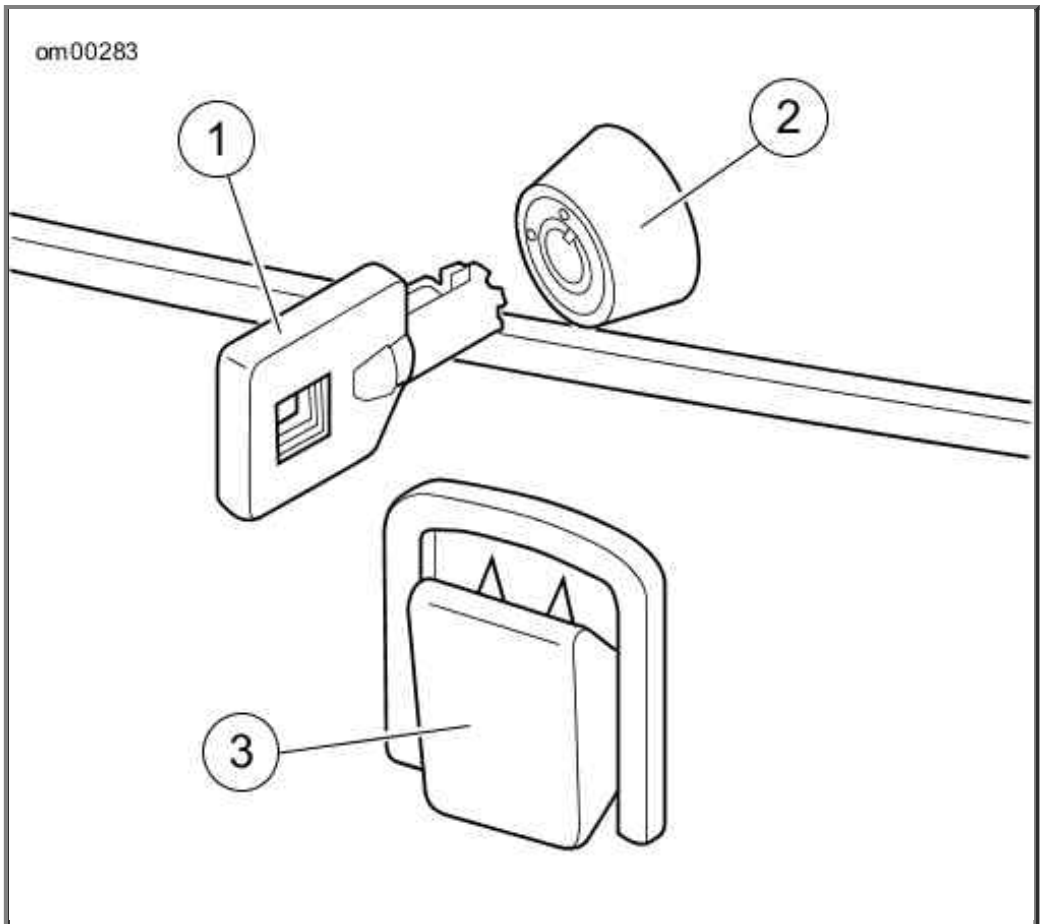


1. Key
2. Lock
3. Draw catch

**Tour-Pak Lock and Draw Catch**

### Saddlebags: FLHTCUSE3

*NOTES:*

- *To lock/unlock saddlebags with the power lock rocker switch in the inner fairing cap, refer to Power Locks: FLHTCUSE3.*
- *To lock/unlock saddlebags with the power lock fob, refer to Power Lock Fob.*
- *The key fob and ignition key do not need the bike turned on to use. The fob has built-in activatioin. It can be used several feet away from the bike.*

## Lock/Unlock With Ignition Key

**Lock:** Insert the key into the neutral position of the saddlebag lock and turn the key 1/8th of a turn to the left. Return the key to the neutral position to remove the key.

**Unlock:** Insert the key in the neutral position of the Tour-Pak lock and turn the key 1/8th of a turn to the right. Return the key to the neutral position to remove the key.

## Opening

1. See Saddlebags: FLHTCUSE3. To open the latch, grab latch with fingers and lift.
2. Place one hand at OUTSIDE CORNER of cover and other hand at opposite outside corner.

Lift outside edge of cover, pivoting inside edge of cover in brackets.

3. Lift inside edge of cover to disengage brackets.

4. Bring cover towards you, over saddlebag. As you bring cover toward you, let it flip over, so the inside faces up. Let cover hang from the nylon check strap.

*NOTE:*

*The covers stay attached to the saddlebags at all times.*

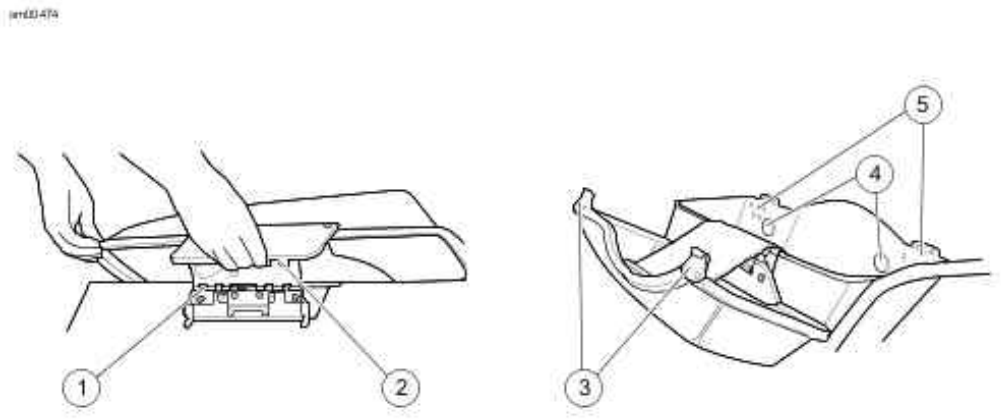


1. Hinge
2. Latch
3. Anchor tabs
4. Bail head studs
5. Anchor brackets

**Saddlebags: FLHTCUSE3**

## Closing

1. See Saddlebags: FLHTCUSE3. Use both hands to hold OUTSIDE corners of cover up and slide inside edge back into place so brackets slide together.

2. Close lid and secure latch. Brackets will engage automatically.

*NOTE:*

*Saddlebag latch and Tour-Pak draw catches should be closed and locked whenever motorcycle is in operation.*

## Removing

The saddlebags are secured to the support brackets by 1/4 turn fasteners called bail head studs.

*NOTE:*

*If your vehicle (international only) does not have the wire form "bail", use a flat bladed screwdriver to turn the studs.*

1. Unscrew saddlebag fasteners by turning 1/4 turn counterclockwise.

2. Tilt saddlebag away from the motorcycle and separate the electrical connector for the power

lock.

3. Remove saddlebag.

## Installing

1. Carefully place saddlebag in position on saddlebag rail.
2. Supporting the saddlebag, mate the power lock connector halves.
3. Align the bail head studs with the support bracket studs. Push the bail head studs into the support bracket and turn 1/4 clockwise.
4. Check that studs are securely fastened.

## Adjustments

If the latches become loose, you can adjust the latch fingers.

**CAUTION**

**Adjust the latch fingers only enough to enable them to properly engage the latch hinge. Bending latch fingers back and forth can overstress the metal and weaken the fingers. (00169a)**

1. Bend the fingers until they firmly engage the hinge.
2. See Miscellaneous Lubrication for lubrication details.

### Adjustable Air Deflectors: FLHTCUSE3

See Adjustable Air Deflector. Air deflectors, located along the left and right bottom edge of fairing, may be adjusted to direct airflow for rider and passenger comfort.

To adjust, grasp the outer edge of the deflector and pivot to desired position.

**Adjustable Air Deflector**

## Fairing Lower Vents

See Fairing Lower Vent Control: FLHTCUSE3. Vents in fairing lowers are controlled by the lever shown. Adjust vent openings to control air flow.

**Fairing Lower Vent Control: FLHTCUSE3**

## Adjustable Passenger Footboards: FLHTCUSE3

Passenger footboards may be adjusted to one of five positions. The horizontal position or tilt of the footboard may be further adjusted for passenger comfort.

1. See Passenger Footboard: FLHTCUSE3. Raise the footboard (1) and loosen lower fastener (2) enough to allow rotating arm (3) to be rotated. Move rotating arm to desired footboard height.
2. Tighten lower fastener to 25-30 ft-lbs (34-40 Nm).
3. Loosen upper fastener (4) enough to allow footboard mount to be rotated.
4. Move footboard mount to desired footboard horizontal position or tilt.
5. Tighten upper fastener to 25-30 ft-lbs (34-40 Nm).

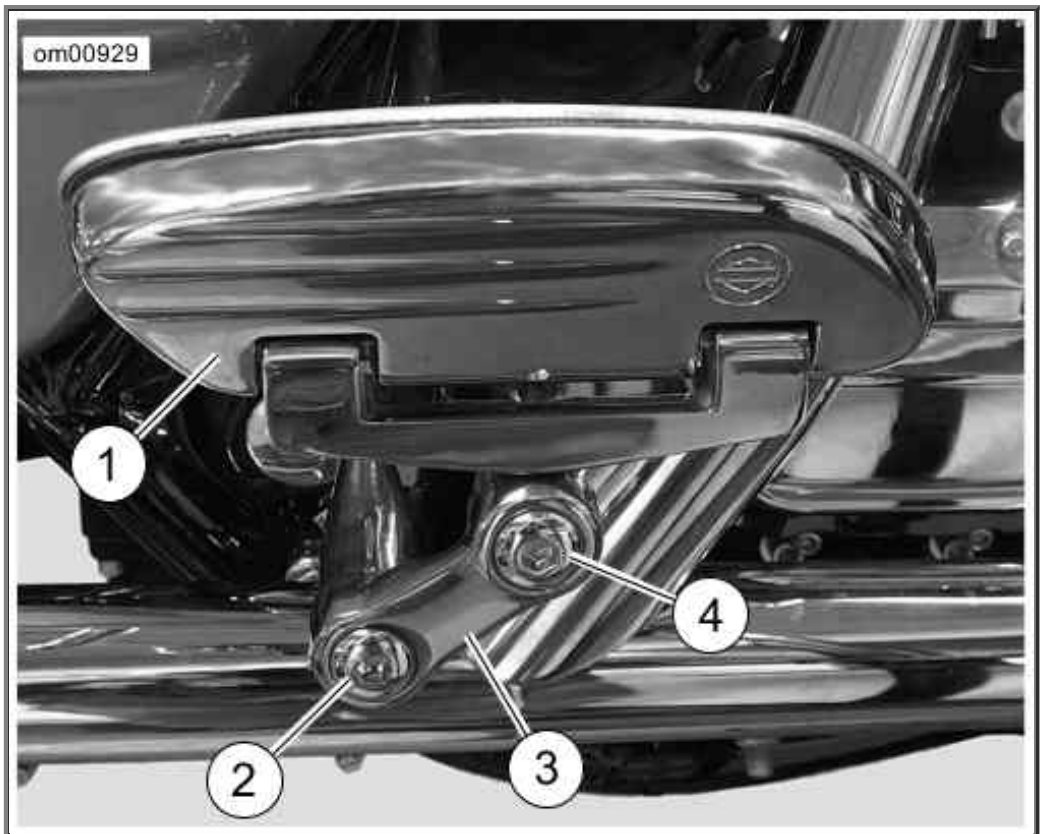


1. Footboard
2. Lower fastener
3. Rotating arm
4. Upper fastener

**Passenger Footboard: FLHTCUSE3**

### Air Suspension Adjustment: FLHTCUSE3

---

## Rear Air Suspension

---

The rear suspension is air adjustable.

*NOTE:*

*An AIR SUSPENSION PUMP AND GAUGE HD-34633 is available at your Harley-Davidson dealer.*

See Rear Air Suspension Air Valve. Adjust the rear shock air pressure by adding or removing air from the air valve located just below the frame cover on the left side of the motorcycle.

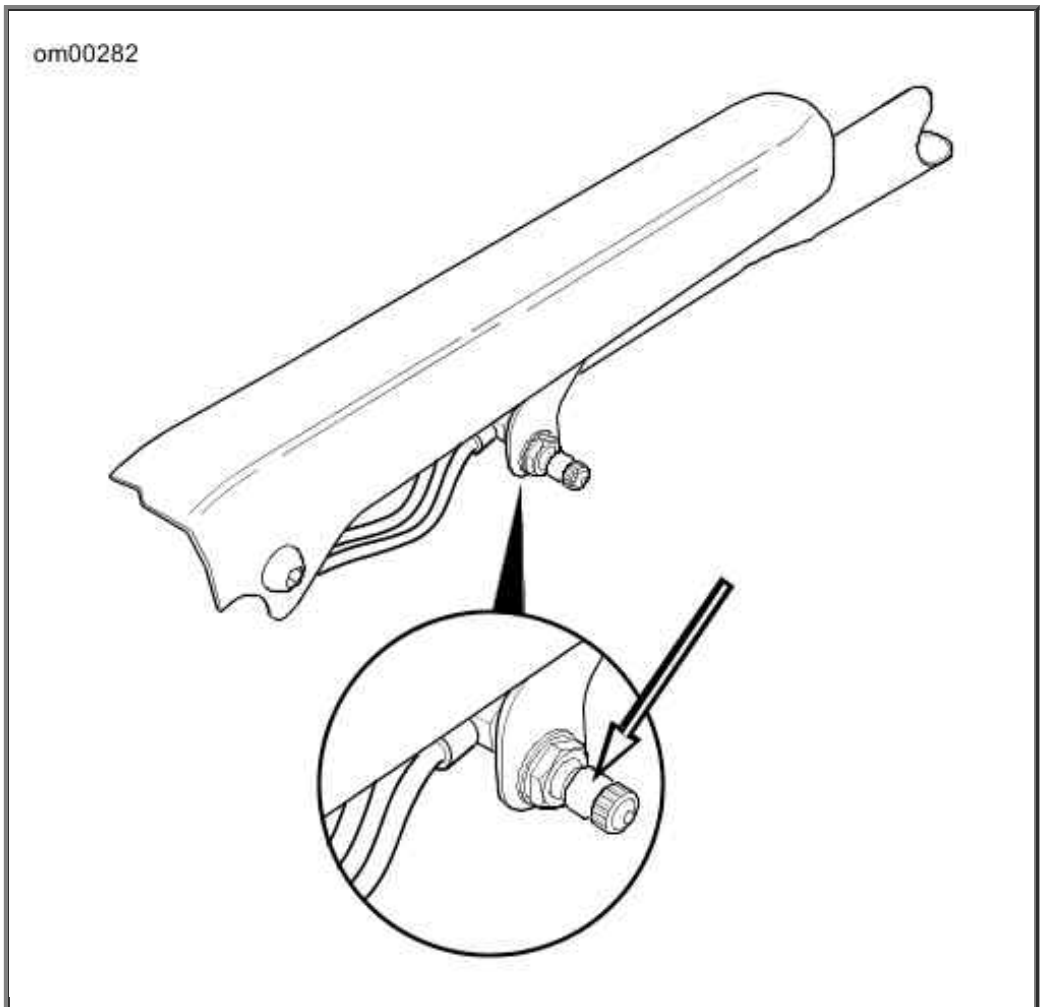


**Rear Air Suspension Air Valve**

**CAUTION**

**Do not exceed maximum air pressure for rear suspension. Air components fill rapidly. Therefore, use low air line pressure. Failure to do so may result in possible damage to components. (00165a)**

*NOTE:*

*Using pressures outside the recommended loading range will result in a reduction of available suspension travel and reduced rider comfort. Refer to Recommended Pressures for Air Suspension Adjustments.*

**⚠WARNING**

**Use caution when bleeding air from the suspension. Moisture combined with lubricant may leak onto the rear wheel, tire and/or brake components and adversely affect traction, which could result in death or serious injury. (00084a)**

*NOTES:*

- *Do not exceed max GVWR.*
- *Always clear the line by adding 3-5 psi 21-35 kPa before releasing air from the pump's valve, but do not exceed 35 psi 241 kPa .*

- *These are recommended starting points. Adjust to suit load conditions, riding style and comfort desired. Less initial pressure does not necessarily result in a softer ride.*

**Recommended Pressures for Air Suspension Adjustments**

| SHOCK LOAD | TOTAL WEIGHT | | PRESSURE | |
|---|---|---|---|---|
| | LB. | KG | PSI | kPa |
| Solo rider | up to 150 | 0-68 | 0 | 0 |
| Solo rider | 150-200 | 68-91 | 0-10 | 0-69 |
| Solo rider | 200-250 | 91-113 | 5-15 | 35-103 |
| Rider with passenger weight of | up to 150 | 0-68 | 10-15 | 69-103 |
| Rider with passenger weight of | up to 200 | 0-91 | 20-25 | 138-172 |
| Maximum GVWR | see label | | 20-35 | 138-241 |

# Advanced Audio System

## Audio System: FLHTCUSE3

As used on the FLHTCUSE3, the Advanced Audio System by Harman/Kardon includes the following:

- AM/FM/WB Stereo Radio Receiver
- CD/MP3 Reader Player
- 40-Watt Amplifier
- Rider/Passenger Intercom
- Citizen Band (CB) Transceiver
- XM Satellite Radio
- GPS Navigation System

The radio receiver and CB transceiver are located under the outer fairing/windshield while their antennas are mounted on the Tour-Pak. The XM Satellite and GPS Navigation modules with their antennas are also located under the outer fairing/windshield. Speakers are located in the front fairing and in the passenger backrest. The 40-watt amplifier is located under the Tour-Pak. An intercom receptacle is found on the fuel tank console for the rider and on the backrest for the passenger.

**⚠WARNING**

**Do not change compact discs while riding, and do not select a volume level that blocks out traffic noise. Distractions or a volume level that blocks out traffic noise, could cause loss of control resulting in death or serious injury. (00086a)**

**CAUTION**

**There are no serviceable parts inside the unit; leave all servicing to qualified service personnel. Disassembly of**

**the unit could result in equipment damage and/or equipment malfunction. (00172a)**

**⚠WARNING**

**Do not disassemble unit. Laser radiation is present if disc player is disassembled and the interlock fails or is defeated. Exposure to laser radiation could lead to death or serious injury. (00087a)**

**⚠WARNING**

**Set intercom volume level and other controls before riding to minimize adjustments on the road. Distractions can lead to loss of control, resulting in death or serious injury. (00088a)**

## Stereo Receiver

All Advanced Audio modules utilize a common stereo receiver. The receiver is an AM/FM/WB band radio with an auxiliary (AUX) port. The receiver also supports a full function CD/MP3 player. Auxiliary audio devices, MP3 players, cassette players, and mini-disc players, can play through the receiver's amplifier and speakers when connected to the **AUX** port.

Receiver features include:

- Electronic single in-line CD/MP3 player with track up/down, forward and reverse scan, repeat and random play functions.
- CD/CDR/CDRW compatibility.
- MPEG 2.5 Level III (MP3) file format compatible.
- More than 10 hours of MP3 music - 150 MP3 songs (10 albums) on one 650MB disc.
- Anti-skip protection (>40 second memory and mechanical dampers).
- Remote controls for frequency tuning, band change, CD select, volume, and bass/treble/fader mixing.
- Automatic Volume Control (AVC) - automatically adjusts volume to compensate for ambient noise due to motorcycle speed.
- Time-of-day clock.
- Weather band frequencies displayed as NOAA channel numbers (active on North American units only).

## Citizen Band (CB) Transceiver

The Citizen Band (CB) radio is a 40 channel digitally tunned transceiver. It can be voice activated by either the rider or passenger.

## XM Satellite Radio

Broadcasting from satellites in geosynchronous orbits, XM is a commercial S-Band radio offering a variety of programming channels. See the separate XM Satellite Radio operator's manual for

activation and operation.

## GPS Navigation System

Receiving positional data from Global Positioning Satellites, the GPS Navigation module locates the motorcycle on a road map digitally stored in the module. After selecting a destination, turn directions displayed in the LCD and announced through the headset/speakers direct the rider to that destination. See the separate Advanced Audio GPS Navigation operator's manual for operation.

### Front Panel Controls: FLHTCUSE3

See Advanced Audio Front Panel Controls: FLHTCUSE3. The front panel consists of a set of pushbuttons, a liquid crystal display, (LCD), a protective door for the Compact Disc (CD/MP3) slot and a covered input port for auxiliary (AUX) players. Six of the pushbuttons are "soft keys" whose function will change with the display.

## ON

Press **ON** to turn the receiver on and off.

## 1, 2, 3, 4, 5/Left Arrow

For the stereo receiver, the soft keys, **1, 2, 3, 4, and 5/Left Arrow**, are used to store and then recall a selected radio frequency (presets). When combined with any of the Advanced Audio System accessories, the function of any active soft key for that accessory will be displayed next to the soft key in the LCD display.

## 6

Pressing the **6** soft key will return the display to the previous menu. For **CB** and **Intercom Setup**, the function of the **6** soft key will be displayed in the LCD next to the **6** soft key.

## 5/Left, Up, Down, Right Arrows

The **5/Left, Up, Down,** and **Right Arrow** soft keys are used for radio band frequency tuning, Bass and Treble mixing, Fader and Volume. They are also used to scroll and highlight a selection in a list. For an Advanced Audio System accessory module, the arrow keys are active when arrows appear in the display.

## OK

With a menu or list item highlighted, press the **OK** pushbutton to confirm the selection and initiate the function.

## COM

The **COM** pushbutton is the Citizen Band (CB) setup button. See CB Operation. Press the **COM** pushbutton to display the CB Setup menu.

## INT

The **INT** pushbutton is the intercom setup button. See Intercom Operation. Press the **INT** pushbutton to display the Intercom Setup menu.

*NOTE:*

*With the headsets/microphones plugged into the rider and/or passenger intercom sockets, the intercom is voice activated (VOX).*

## NAV

Press the **NAV** pushbutton to open the navigation main menu.

## LCD

The liquid crystal display (LCD) displays the operational status of the stereo receiver and that of any accessory.

## CD Door

The CD door is a spring-loaded cover and will stay open when exchanging CDs.

Close the CD door after loading or unloading a CD. To close the door, push the door down until it latches.

## EJECT

The CD **EJECT** button is found under the CD cover. Press the **EJECT** pushbutton to eject the CD.

## AUX

The auxiliary input port under the **AUX** cover connects the receiver to an auxiliary device such as a cassette or MP3 player. Use a 1/8 in. (3.5 millimeter) pin to pin extension cord to plug the line out or headset out from the auxiliary device into the **AUX** port. AUX appears in the LCD and is selectable with the **MODE SEL** switch. The user has control of Bass, Treble, Fader and Volume. All other player functions are performed with the auxiliary device. Set the volume level of the **AUX** device to normal or average.

*NOTE:*

*Close the protective cap whenever the **AUX** port is not in use.*

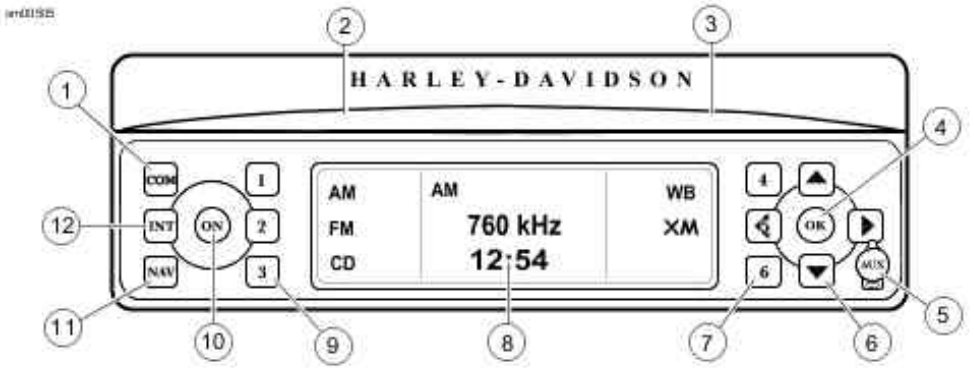


1. Communications (CB) setup
2. CD cover
3. EJECT (under cover)
4. OK (Confirm)
5. Auxiliary connector cover
6. Left (5), Up, Right, Down Arrow Keys
7. Soft keys (4, 5/Left Arrow, 6)
8. Liquid crystal display (LCD)
9. Soft keys (1, 2, 3)
10. ON key
11. NAV (navigation key)
12. Intercom setup

**Advanced Audio Front Panel Controls: FLHTCUSE3**

### Left Handlebar Controls: FLHTCUSE3

See LH Audio Controls: FLHTCUSE3. Easy to operate while riding, audio controls are mounted on the left hand switch housing on the left handgrip. The left hand audio controls are a **+/AUDIO/-** and a **PTT +/SQ/-** switch.

## +/AUDIO/- Switch

**AUDIO:** See LH Audio Controls: FLHTCUSE3. Press the **AUDIO** switch to access the Audio/Setup menu on the LCD. Press and release **AUDIO** or the press the soft key to toggle to the next displayed function in sequence from Bass, to Treble, to Fade, to Display, to Volume and then to to AVC.

If the **AUDIO** switch is left on any selection the function automatically reverts back to the selected mode after approximately 2-3 seconds.

**±:** Pressing the **AUDIO** switch upward (**+**) raises the level for the currently selected Audio/Setup (Bass, Treble, Fade, Volume or AVC). Pressing the switch downward (**-**) lowers the level. The level is raised or lowered as long as the switch is held until the minimum or maximum level is reached.

The LCD displays a horizontal dashed line to indicate the level. In the center of the line is a single thin dash. When the level is at the center, the selected audio is at a mid-point of its range.

See C in Radio Receiver LCD Display Examples: FLHTCUSE3. Fade adjusts the balance between rider and passenger speakers. Pressing **AUDIO** upward (**+**) moves the balance to the front speakers while pressing **AUDIO** downward (**-**) moves the balance to the rear speakers. Equal volume in front and rear speakers is indicated by one horizontal single line in the center

position.

The Display function sets the illumination level of the characters in the LCD display.

The AVC (Automatic Volume Control) function sets the volume level to compensate for the ambient noise associated with motorcycle speed.

## PTT and +/SQ/- Switch

See LH Audio Controls: FLHTCUSE3. Push-To-Talk (**PTT**) and the squelch control switch (**+/SQ/-**) is located on the left handlebar switch assembly.

**PTT:** With the power ON and the LCD indicating CB is active, press and hold the **PTT** switch to transmit over the channel displayed. Release **PTT** to end transmission.

**+/SQ/-:** Lower the threshold to allow reception of CB signals by pressing the **+/SQ/-** switch toward the rear (**-**) or raise the threshold by pressing the **+/SQ/-** switch toward the front (**+**).

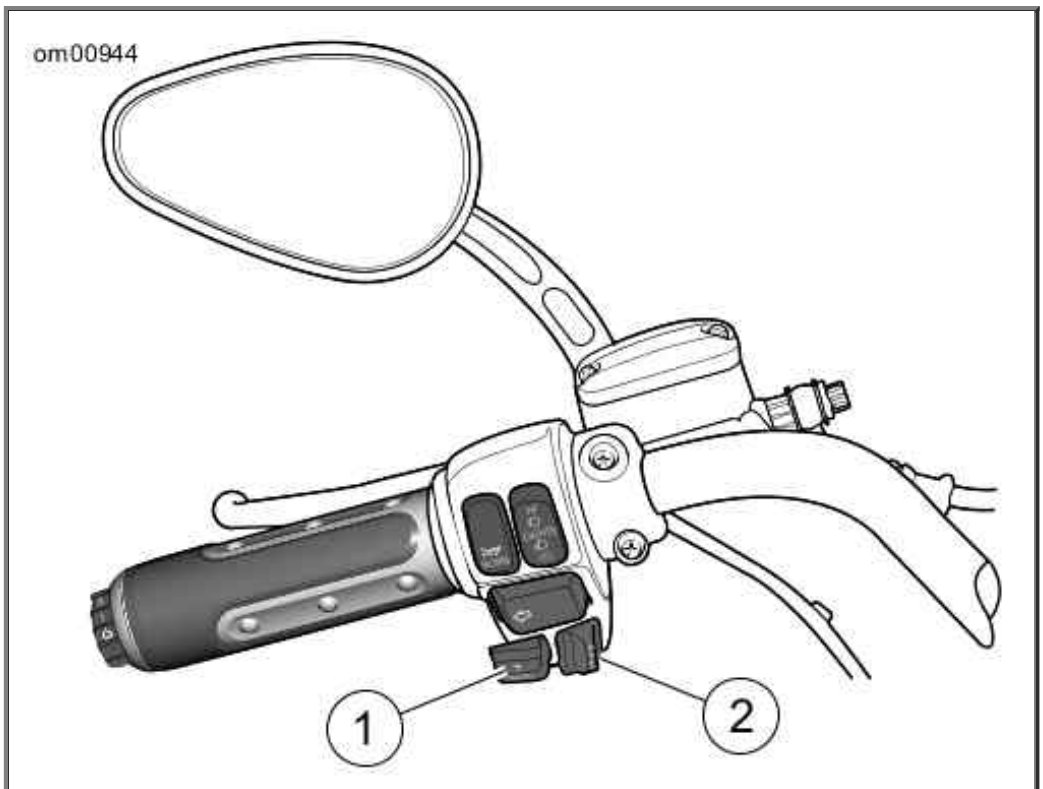


1. +/AUDIO/-
2. PTT/+/SQ/-

**LH Audio Controls: FLHTCUSE3**

### Right Handlebar Controls

See RH Audio Control (UP/MODE SEL/DN): FLHTCUSE3. The mode select (**MODE SEL**) switch is located on the right handlebar switch assembly.

## UP/MODE SEL/DN Switch

**MODE SEL**

With the radio power ON, press and release the **MODE SEL** switch to sequence between the radio bands.

When a audio CD/MP3 disc is inserted into the CD player the **CD** function is added to the selections. When a 1/8 in. (3.5 mm) connector is plugged into the **AUX** input port the AUX function is added to the selections.

The LCD display indicates the function selected.

**UP/DN**

In the receiver mode: **UP/DN** allows up or down radio station SEEK tuning.

In CD/MP3 mode: **UP/DN** changes tracks and performs fast advance and fast reverse.

In the CB mode: **UP/DN** changes the CB channel.

In the Intercom mode: **UP/DN** changes the voice activated microphone (VOX) sensitivity.

In the AUX mode: The **UP/DN** switch is inactive.

For a detailed description of the various modes, see Receiver Operation: FLHTCUSE3.

**Receiver Frequency Bands: FLHTCUSE3**

| MARKET | BAND | FREQUENCY | STEPS |
|---|---|---|---|
| Domestic | AM | 530-1700 kHz | 10 kHz |
| | FM | 87.75-107.9 MHz | 200 kHz |
| | WB | 162.400-162.550 MHz | 25 kHz |
| International | LW | 144-279 kHz | 3 kHz |
| | MW | 531-1611 MHz | 9 kHz |
| | FM | 87.5-108 MHz | 100 kHz |

*NOTE:*

*The intercom and CB can be activated at the same time with the receiver modes. The intercom and CB signals are passed to the audio circuits only if the signal strength exceeds the threshold established by CB squelch or VOX microphone sensitivity levels. Depending on the position of the speaker control switch in the fairing switch cap, the receiver function, the CB, and the VOX microphone can be heard in the headsets simultaneously. See Intercom Operation and CB Operation.*

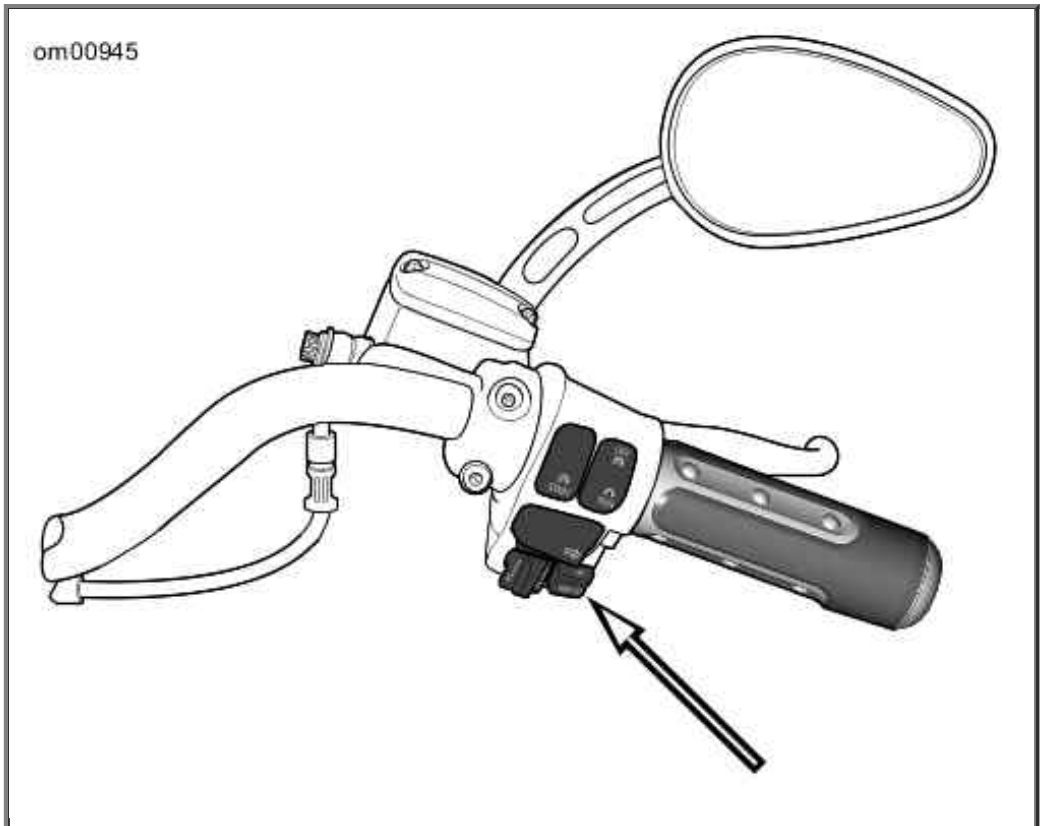


RH Audio Control (UP/MODE SEL/DN): FLHTCUSE3

### Receiver Operation: FLHTCUSE3

See Advanced Audio Front Panel Controls: FLHTCUSE3 for a picture of the stereo receiver front panel.

## Set Time-of-Day

Set the time-of-day with the Ignition/headlamp Key Switch turned to **IGNITION** or **ACCESS** but with the stereo receiver OFF.

Press the Set or number (**6**) soft key on the front panel to display the time setup menu.

See A in Radio Receiver LCD Display Examples: FLHTCUSE3. To increase the hours in the display press the Hrs+ soft key. To decrease hours press the Hrs- soft key. When the hour is correct, release the soft key.

To increase the minutes in the display press the Min+ soft key. To decrease minutes press the Min- soft key. When the minute is correct, release the soft key.

## Turn Receiver ON/OFF

To turn the receiver ON, turn the Ignition/headlamp Key Switch to **IGNITION** or **ACCESS** and press the **ON** button on the front panel. To turn the receiver OFF, press the **ON** button.

If the receiver is ON when the ignition is turned OFF, the receiver will power up when the Ignition/headlamp Key Switch is turned to **IGNITION**.

## Select a Frequency Band/Mode

Using the right thumb, press the **MODE SEL** switch on the right hand grip and release to cycle to the desired frequency band or mode or press the soft key next to the frequency band displayed in the LCD to select a frequency band.

See B in Radio Receiver LCD Display Examples: FLHTCUSE3. The LCD highlights the selected band.

*NOTE:*

*Refer to Receiver Frequency Bands: FLHTCUSE3. When a CD/MP3 disc is present in the CD slot and/or an auxiliary player is plugged into the AUX port, the **MODE SEL** switch will cycle through the CD and AUX modes as well as the frequency bands.*

## AM vs FM Reception

Commercial radio broadcasting is either AM (Amplitude Modulation) or FM (Frequency Modulation).

## AM

AM radio waves reflect off the ionosphere which results in consistent signal reception at a long range (up to 100 miles or 160 kilometers).

However, AM radio can be displaced by loud humming, popping and crackling noises. This is electrical interference caused by noise from vehicle ignitions, electric signs, power lines and electrical storms.

## FM

The advantages of FM radio are high fidelity sound, stereo reception, a wide range of broadcasting formats, and a signal that is free of electrical interference.

The disadvantage of FM radio is its short range. FM radio waves travel in straight lines, called "line-of-sight," therefore, FM signals cannot be received over the horizon. At the limit of a station's range, the reception may fade in and out when objects pass between the transmitter and the motorcycle.

## FM Stereo vs FM Mono

See E in Radio Receiver LCD Display Examples: FLHTCUSE3. Normally, the Advanced Audio System plays FM signals in stereo. The LCD will indicate **STEREO**.

However, the stereo receiver has circuits which eliminate or minimize FM flutter due to weak stereo signals. The circuits detect a weak FM stereo signal and automatically blend it into a stronger FM mono signal. The transition is smooth and flutter free because it occurs over a range of signal conditions, rather than at a minimum threshold.

When the system is automatically blending or is receiving an FM mono signal, the stereo indicator (**STEREO**) will disappear from LCD screen.

## WB

See H in Radio Receiver LCD Display Examples: FLHTCUSE3. Broadcast by the National Oceanic and Atmospheric Administration (NOAA) National Weather Band (WB) frequencies are available in North America only.

To receive NOAA weather alerts while listening to other radio bands, highlight the Alert indicator in the WB display by pressing the soft key. An alert tone will automatically switch the receiver to the announcing WB channel regardless of which frequency band is playing.

When equipped with the CB module, use the soft key to highlight the Alert indicator in the LCD display. Weather alerts are announced over other audio and the **Alert** indicator is highlighted in the display.

## XM Radio

Broadcasting from satellites, XM Satellite Radio is a commercial S-band radio at 2332.5 MHz to 2345 MHz. Programming is up-linked to XM satellites positioned in geosynchronous orbits over the continental United States. Refer to the Operators Manual for XM Radio for tuning and other operations.

*NOTE:*

*Subscription services are only available in the United States and Canada.*

## Tuning-in a Radio Station

The radio has several tuning modes in each of the frequency bands: Manual, Seek, Scan, Preset Memory and Preset Scan.

Tuning in all three modes continuously wraps around the ends of the band.

## Volume

See D in Radio Receiver LCD Display Examples: FLHTCUSE3. At any time the receiver is playing, the volume can be adjusted by pressing the **AUDIO** switch up (**+**) to increase volume or down ( **-**) to decrease volume.

## Manual Tuning

To manually tune the radio to a different frequency:

Press the **Up Arrow** button or the **Down Arrow** button to select the frequency in that direction. Hold the selected arrow button, and after a short delay of 1.5 seconds, the radio will continue to change frequencies until the selected arrow button is released.

## SEEK Tuning

See E in Radio Receiver LCD Display Examples: FLHTCUSE3. In SEEK, the radio tunes in to the next strong station.

Press and release the **MODE SEL** switch up (**UP**) to tune in the next strong station upward in the band. Press and release the switch down (**DN**) to tune in the next strong station downward in the band.

*NOTE:*

*The SEEK icon appears in the display as long as the receiver is seeking the next strong frequency. The SEEK icon disappears as soon as the receiver has tuned in the next station.*

## SCAN Tuning

---

In SCAN, the radio continuously tunes from one strong station to the next until the SCAN is cancelled.

See F in Radio Receiver LCD Display Examples: FLHTCUSE3. Press and hold the **MODE SEL** switch **UP** or **DN** approximately 5 seconds to scan the band for strong station signals. Each strong station remains tuned in for 8 seconds before the radio scans to the next station. The receiver will continue to scan until cancelled.

To select a station, cancel SCAN while the radio is tuned to that station. Press the **MODE SEL** switch **UP** or **DN** to cancel a SCAN moving up the band.

## Preset Memory Tuning

---

Use the soft keys, **1, 2, 3, 4,** and **5/Left Arrow** as preset buttons to store frequently tuned stations.

*NOTE:*

*See C in Radio Receiver LCD Display Examples: FLHTCUSE3. AM can store 6 preset frequencies.*

*See E and F in Radio Receiver LCD Display Examples: FLHTCUSE3. Separate FM1 and FM2 bands allow the rider to store 2 sets of 5 preset FM frequencies (10 total). Use the **More** soft key to toggle between FM1 and FM2. The full range of FM frequencies can be selected in either FM1 or FM2.*

To store a current station, press and hold any one of the preset buttons for 1.5 seconds. After an audible signal (a chirp), the station's frequency has been stored and the frequency will appear in the display next to the preset soft key.

To tune to a stored station, press and release the preset soft key.

## Preset SCAN Tuning

---

See G in Radio Receiver LCD Display Examples: FLHTCUSE3. In preset SCAN, the radio continuously tunes from one preset station to the next until the preset SCAN is cancelled. A P.SC icon will display while preset SCAN is active.

In the FM band, press and hold the More soft key for approximately 3 seconds. Each preset

station remains tuned in for 10 seconds before the radio moves to the next station.

To select a station, cancel preset SCAN while the radio is tuned to that station. Press the **MODE SEL** switch **UP** or **DN** to cancel a preset SCAN.

## Adjusting Volume

Volume can be adjusted in any radio band.

See D in Radio Receiver LCD Display Examples: FLHTCUSE3. Volume is adjusted with the **AUDIO** switch on the left hand grip. Using left thumb, press the **AUDIO** switch up (**+**) to raise the volume or down (**-**) to lower the volume. The LCD displays the word Volume and a bar graph that changes length with the volume.

Press the **MODE SEL UP** or **DN** to cancel the Audio/Setup display or wait 5 seconds after the **AUDIO** switch is released, the display switches to the currently selected frequency band.

See K in Radio Receiver LCD Display Examples: FLHTCUSE3. Volume can also be adjusted in Audio/Setup.

Press and release the **AUDIO** switch to enter the Audio/Setup display. Press and release the **AUDIO** switch to cycle through Bass, Treble, Fade and Display to Volume and the **AUDIO** switch to raise (**+**) or lower (**-**) the volume.

## Mixing Bass and Treble

Bass and treble range adjustments can be applied to any Advanced Audio System source.

**BASS:** See I in Radio Receiver LCD Display Examples: FLHTCUSE3. Press **AUDIO** to display Bass Audio/Setup. Using the left thumb, press the **AUDIO** switch up (**+**) to increase the bass range or down (**-**) to lower the bass range. The LCD displays the word Bass and a dashed line that changes length with the setting. The short center dash indicates a middle setting.

**TREBLE:** See J in Radio Receiver LCD Display Examples: FLHTCUSE3. From Bass Audio/Setup, press and release **AUDIO** to sequence to Treble. Using the left thumb, press the **AUDIO** switch up (**+**) to increase the treble range or down (**-**) to lower the treble range.

See J in Radio Receiver LCD Display Examples: FLHTCUSE3. The LCD displays the word Treble and a bar graph that changes length with the setting. The short center dash indicates a middle setting.

## Adjusting AVC

See L in Radio Receiver LCD Display Examples: FLHTCUSE3. Automatic Volume Control (AVC) automatically adjusts volume level to compensate for ambient noise associated with motorcycle speed.

If the AVC does not adequately compensate for ambient noise (or if it over compensates), enter the audio setup menu and select AVC. Compensation is adjusted with the **AUDIO** switch on the left hand grip. Using left thumb, press the **AUDIO** switch up (**+**) to raise the compensation level or down (**-**) to lower the compensation.

*NOTE:*

*Although the receiver AVC is preset at 3 bars, it is adjustable from 0 bars (OFF) to 4 bars. At 1 bar, the volume does not change with motorcycle speed. The more bars displayed, the higher the volume increases with speed.*

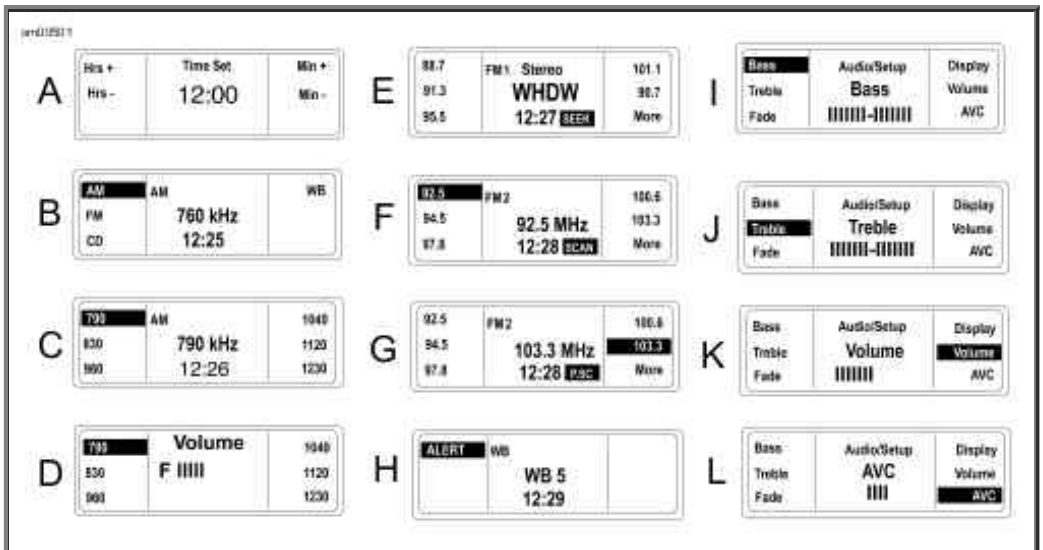


**Radio Receiver LCD Display Examples: FLHTCUSE3**

## Adjusting Display Contrast

---

See Character Display Illumination. Select Display from the Audio/Setup menu with the **AUDIO** switch. Press the **AUDIO** up (**+**) to increase or down (**-**) to decrease the contrast of the characters in the display.

*NOTE:*

*The contrast can be decreased to render the characters invisible against the background. The characters will appear to have disappeared in the display. Before leaving the Display screen, always increase the character illumination to make the characters visible in other modes.*

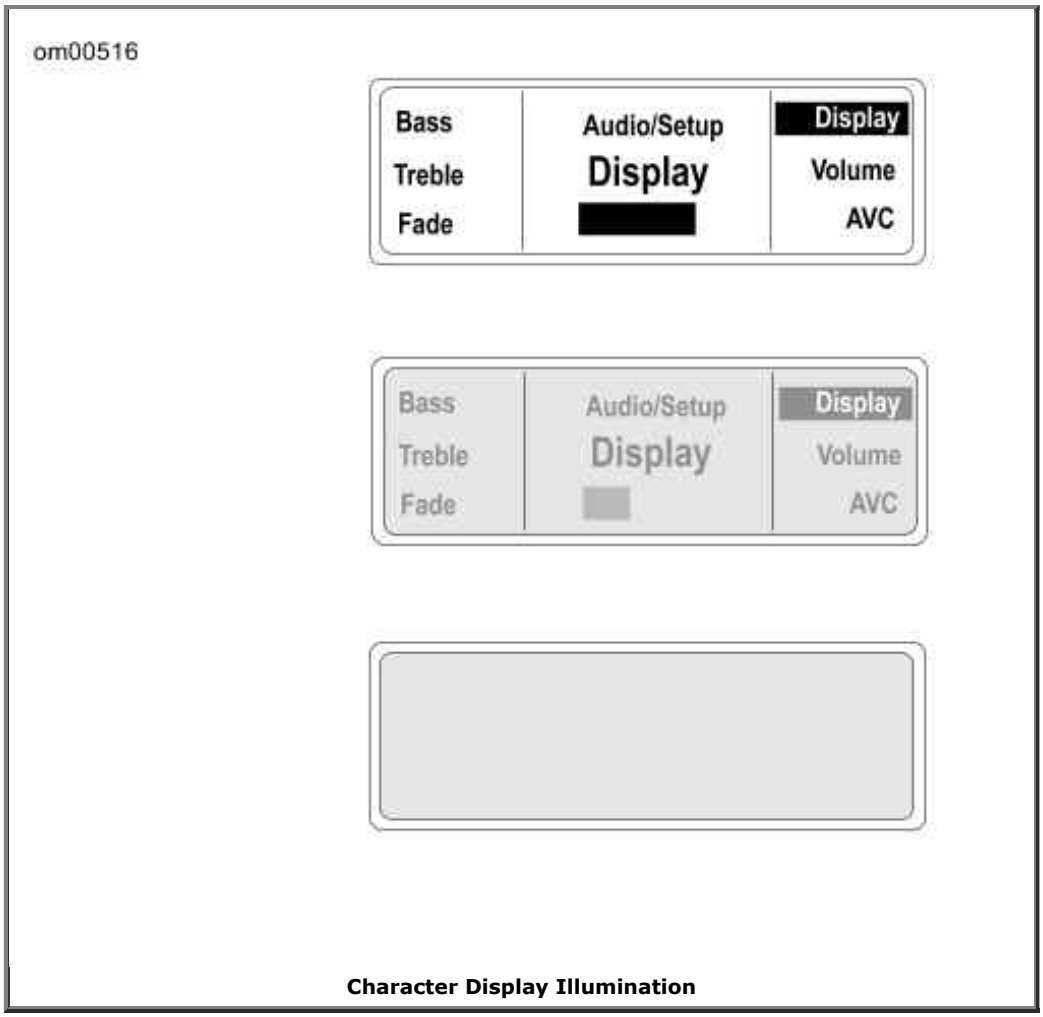

Character Display Illumination

## CD/MP3 Operation

The CD player will accept commercial audio discs as well as compact discs recorded with MP3 (MPEG 2.5 Level III), files on compact disc read only (CDR) or compact disc read and write (CDRW) formats.

**CAUTION**

**There are no serviceable parts inside the unit; leave all servicing to qualified service personnel. Disassembly of the unit could result in equipment damage and/or equipment malfunction. (00172a)**

**⚠WARNING**

**Do not change compact discs while riding, and do not select a volume level that blocks out traffic noise. Distractions or a volume level that blocks out traffic noise, could cause loss of control resulting in death or serious injury. (00086a)**

**⚠WARNING**

**Do not disassemble unit. Laser radiation is present if disc**

**player is disassembled and the interlock fails or is defeated. Exposure to laser radiation could lead to death or serious injury. (00087a)**

## Auto Load

With the receiver power ON, raise the CD door and gently insert a CD, label side up, into the CD slot until the unit automatically pulls the CD into the player. Close the CD door.

*NOTE:*

*Do not use double sided CDs in the Advanced Audio stereo receiver. Double sided CDs may become permanently lodged in the player.*

See C in CD/MP3 Display Examples. The receiver will automatically switch to CD operation. The CD track number and play time will appear in the LCD display. With a CD in the player, CD is added to the modes selectable with the **MODE SEL** switch.

**⚠WARNING**

**Set intercom volume level and other controls before riding to minimize adjustments on the road. Distractions can lead to loss of control, resulting in death or serious injury. (00088a)**

## Disc Error 1

See B in CD/MP3 Display Examples. If the CD loaded into the CD player is damaged, of incorrect format, or if upside down, the LCD will display the Disc Error 1 message.

Eject the CD. Refer to Recommendations for Handling CDs.

## Eject

**⚠WARNING**

**Do not change compact discs while riding, and do not select a volume level that blocks out traffic noise. Distractions or a volume level that blocks out traffic noise, could cause loss of control resulting in death or serious injury. (00086a)**

Press the **EJECT** button found under the CD door to eject a CD. The CD will be partially ejected. Remove the CD. Close and latch the CD door.

The receiver will automatically return to the radio band and frequency playing when the CD was loaded and the CD mode is no longer selectable.

## Tracks

To change CD/MP3 tracks, use the right thumb and press and release the **MODE SEL** switch on the right hand grip. Press **UP** and release to select higher numbered tracks or press **DN** and release to select lower number tracks.

Pressing the **Up Arrow** and **Down Arrow** keys will also advance tracks.

*NOTE:*

*The player automatically numbers the MP3 files found on a CD in alphabetical order.*

*NOTE:*

*If the **MODE SEL** switch is pressed and held **UP** or **DN** longer than 1.5 seconds, the track selections will fast advance or reverse as long as the switch is held.*

CD track selection wraps around the first and last track.

## Fast Advance and Reverse

To fast advance a track, press the **MODE SEL** switch **UP** and hold longer than 1.5 seconds. The current track will fast advance while the switch is pressed **UP**. The audio will advance to the subsequent track as long as the switch is held **UP**.

See D in CD/MP3 Display Examples. The play time display in the LCD will also fast advance.

To fast reverse a track, press **MODE SEL DN** and hold longer than 1.5 seconds. The current track will fast reverse while the switch is pressed **DN**.

The play time display in the LCD will also fast reverse.

## Random

To play tracks randomly, press the Random soft key on the front panel while in the CD mode. The word Random will remain highlighted in the display. No selection is repeated until all other selections have been played.

*NOTE:*

*The Random soft key toggles between normal and Random play. Press once for random play. Press a second time to return to normal play. Pressing the **MODE SEL** switch **UP** or **DN** will select different tracks at random.*

See D in CD/MP3 Display Examples. Random will be highlighted in the display.

## Scan

To scan the tracks on an CD/MP3 disk, press the Scan soft key.

*NOTE:*

*The tracks will play for 8 seconds and then jump to the next track which will play for 8 seconds.*

Upon selecting a track, press and release the **MODE SEL** switch to continue playing that track.

## Repeat

To repeat a CD track while it is playing, press the soft key next to the Repeat display.

To cancel Repeat, press the Repeat soft key again or press the **MODE SEL** switch **UP** or **DN** to change tracks.

Repeat will no longer be highlighted in the display.

## MP3

The receiver CD player will automatically recognize and play MP3 files.

*NOTE:*

*The files will be numbered sequentially.*

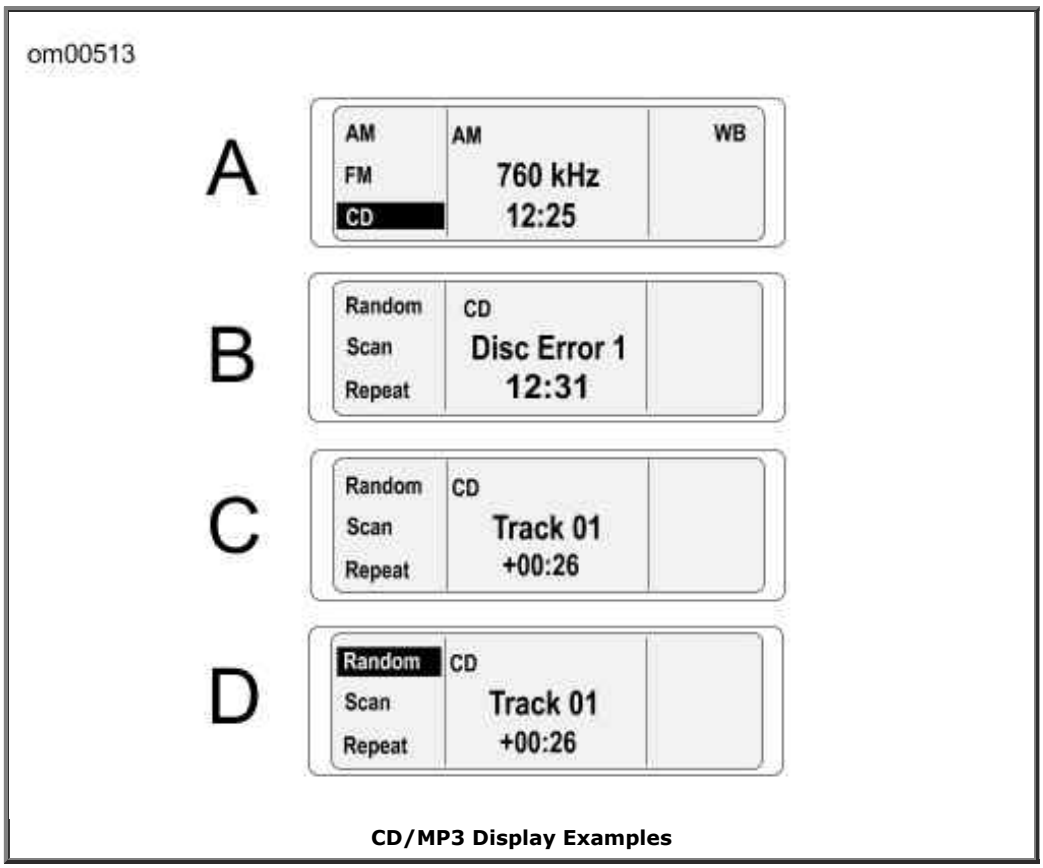


**CD/MP3 Display Examples**

### Recommendations for Handling CDs

- Use caution when handling a CD. Avoid touching the bottom (shiny) side.
- Store audio CD/MP3 discs in acrylic jewel cases to protect against dust, scratches, light, and changes in humidity.
- Store CDs in a cool dry place away from direct sunlight.
- Use commercially available cleaning tissue to clean the CDs. Never use solvents that can damage the CD.
- Keep protective CD door closed at all times.

**⚠WARNING**

**Do not disassemble unit. Laser radiation is present if disc player is disassembled and the interlock fails or is defeated. Exposure to laser radiation could lead to death or serious injury. (00087a)**

*NOTE:*

*A laser that cannot focus properly may cause skipping. A clouded lens can be caused by dirty CDs, dust, smoke, high humidity, and airborne particles may cause the laser lens to cloud. Operating the CD without allowing the motorcycle to warm up can also cause a CD to skip.*

## Intercom and Citizen Band: FLHTCUSE3

The Advanced Audio System supports includes a digitally tuned 40 channel Citizen Band (CB) transceiver, a rider/passenger intercom.

Features include:

- Rider headset connector on fuel tank console.
- Passenger headset connector on backrest.
- Handlebar mounted rider push to talk (**PTT/+/SQ/-**) switch (CB and Intercom).
- Fairing-mounted speaker switch.
- Rear-mounted passenger **UP/MODE SEL/DN** and **PTT/+/VOL/-** switches (CB and Intercom).
- Digitally adjustable rear headset speaker volume.
- Passenger receiver band switching and frequency tuning.
- Passenger CD/MP3 player control.
- Rider hand-held microphone compatibility for areas that prohibit headset (helmet-mounted) speakers.

## Headsets and Sockets: FLHTCUSE3

**CAUTION**

**Some local governments prohibit or restrict the use of headset (helmet-mounted) speakers. Please check with local authorities and obey all applicable laws and regulations. (00173a)**

A Harley-Davidson dealer can help you select the correct genuine Harley-Davidson headsets and microphones for your year and model Harley-Davidson. Harley-Davidson stereo helmet headsets with 7 pin DIN jacks fit the rider and the passenger intercom sockets. Other headset microphones will not work.

See Front Headset Socket and Passenger Intercom Socket: FLHTCUSE3. Open the socket cap and with the ridge on the headset jack facing upward and insert the jack into either the front or rear headset socket.

*NOTE:*

*For areas that do not permit headset speakers, a special hand-held microphone can be used to transmit over the CB. This microphone is also available through a Harley-Davidson dealer.*

**CAUTION**

**Do not pull on the cord to remove the headset from the socket. Pull on the headset jack to disconnect the headset from the socket. (00174a)**

The spring loaded hinge keeps the headset socket cap closed while riding. It protects against dirt and water when the headset or hand-held microphone is not in use. Before washing the motorcycle, verify that **BOTH** rider and passenger socket caps are closed.

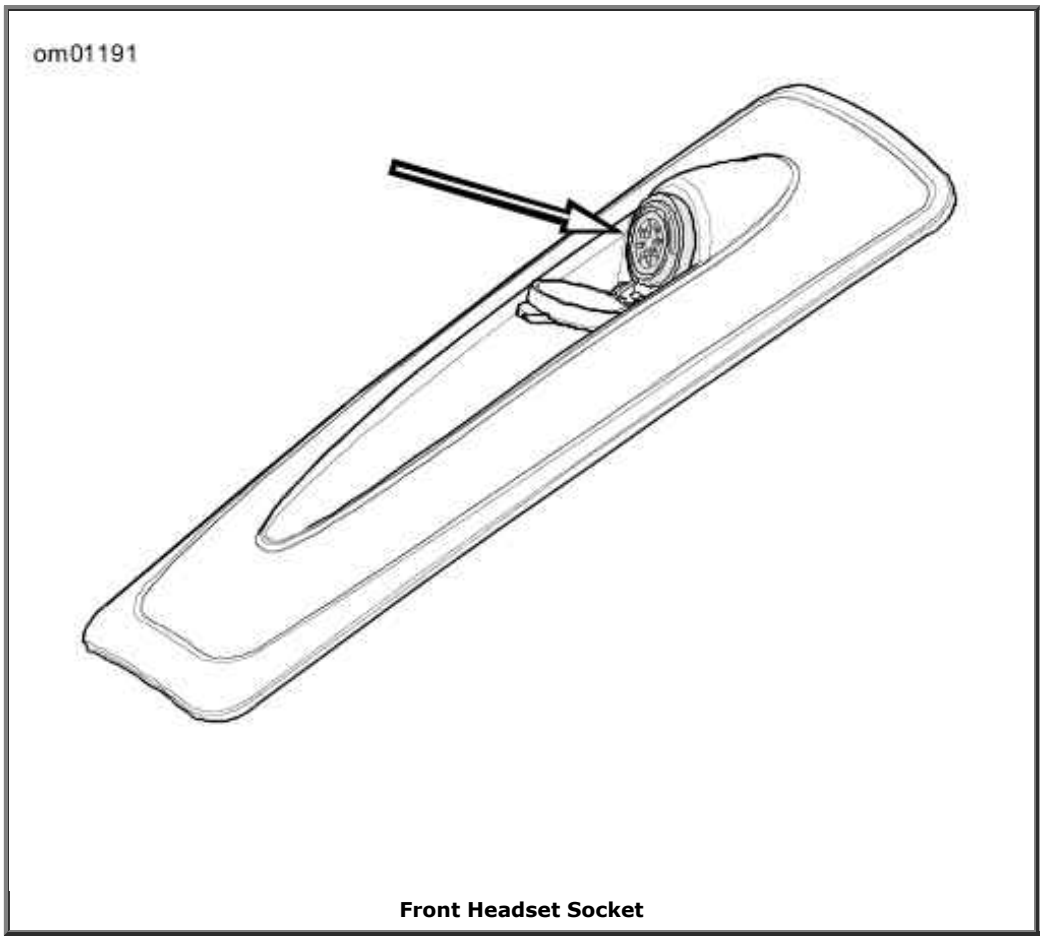


**Front Headset Socket**

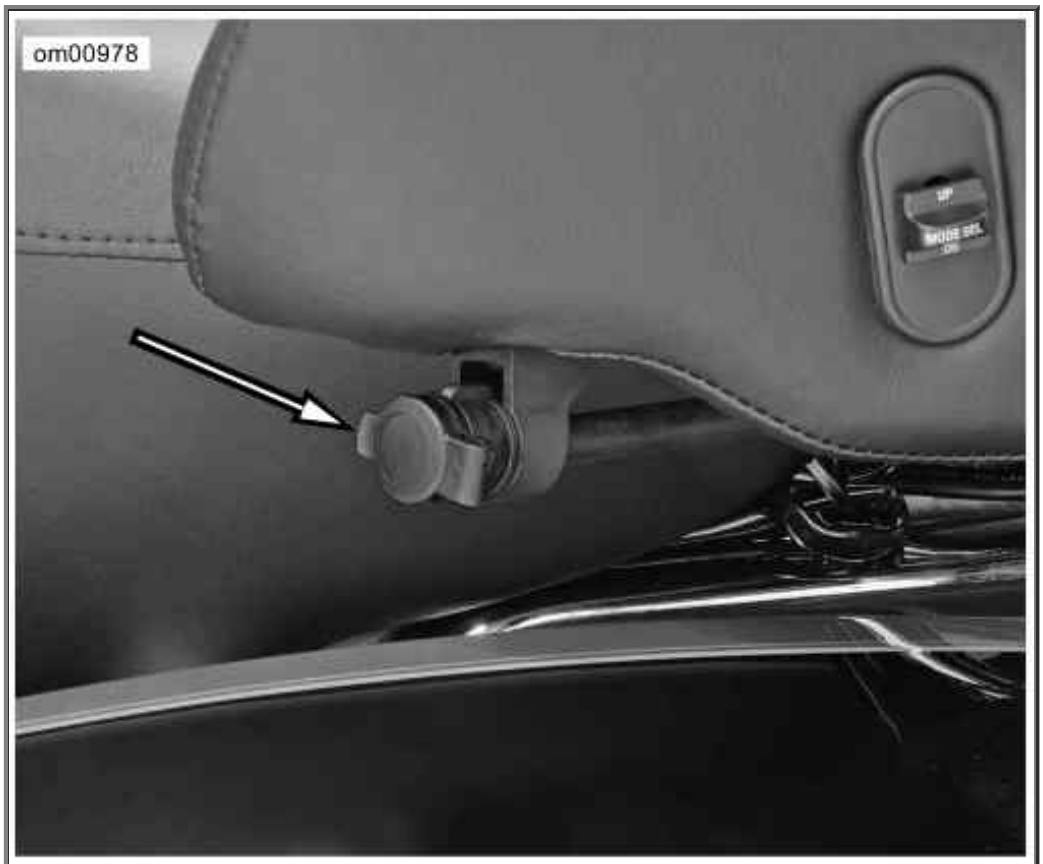


**Passenger Intercom Socket: FLHTCUSE3**

### VOX Microphones

The Harley-Davidson intercom uses a voice-activated (VOX) microphone for hands-free intercom operation. The headset microphone minimizes the transmission of hand-held microphone generated noise.

The intercom is activated when a voice or sound exceeds a preset audio level, the voice is said to "break VOX". The voice or sound is transmitted to the headsets.

*NOTE:*

*Pressing and holding the **PTT** switch will also open the microphone.*

Once VOX is broken, a conversation can proceed uninterrupted. After the absence of sound or voice, there is a delay of approximately 2 seconds before the microphone is deactivated. This delay in deactivation allows for pauses in conversation.

Because loud exhausts, passing trucks, car horns or other background sounds may unintentionally activate the intercom, the sound level necessary to break VOX is adjustable. See Intercom Operation.

### Speaker Controls: FLHTCUSE3

## SPKR Switch

A three position speaker (SPKR) switch is located on the inner fairing cap. See SPKR (speaker) Switch: FLHTCUSE3 .

**Off/Forward:** In the forward position, the speakers are off. Audio (radio, CD/MP3, AUX and CB) is played in the headsets only. During simultaneous CB reception, the other audio source is muted and only the CB is heard in the headsets.

**Center:** In the center position, the radio, CD/MP3 player or AUX is played over the speakers while the CB is played only in the headsets.

**On/Rearward:** In the rearward position, the speakers are on. With the SPKR indicator lit, the radio, the CD/MP3 player, or any AUX device and the CB are played through both the rider and passenger speakers. When a CB signal is received, other audio sources mute and the CB is played over the speakers. Refer to Audio Routing and Mixing Combinations.

*NOTE:*

*The intercom is only heard in the headsets, regardless of the SPKR switch position.*

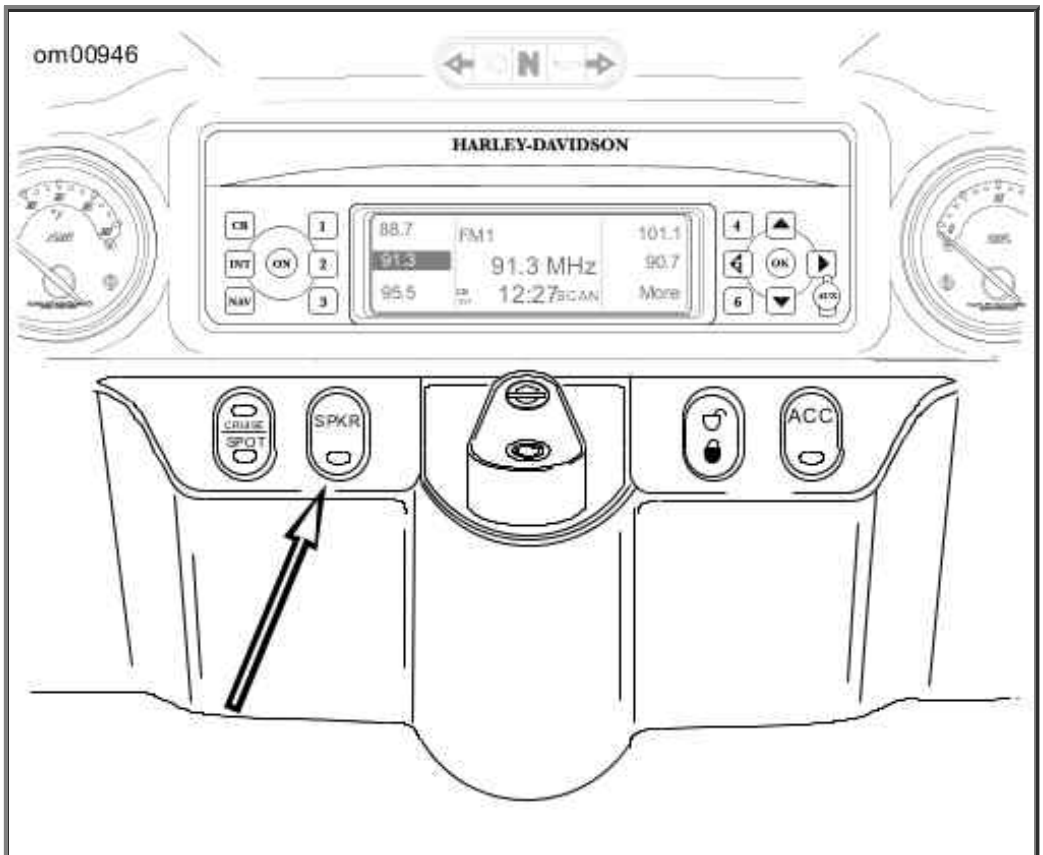


**SPKR (speaker) Switch: FLHTCUSE3**

## Rider to Passenger Speaker Balance

The receiver FADER control balances the front rider and rear passenger speakers.

**FADER:** With the fairing speaker switch in either the SPKR or center position, press the **AUDIO** switch to cycle through Bass to Treble to Fade in the LCD. Or with the motorcycle stationary, press the left hand **AUDIO** switch once to enter the Bass display and select Fade with the **MODE SEL** switch or with the soft key.

The LCD displays the word Fader and a row of outlined rectangles. The smaller center rectangle indicates equal balance between front and rear speakers. A single solid rectangle moves left or right of the center dash as the balance of volume is switched from the passenger speakers (to the left) to the rider speakers (to the right). See C in Passenger UP/MODE SEL/DN Switch: FLHTCUSE3.

- Press the AUDIO switch up (+) to raise the volume from the rider speakers while lowering the volume from the passenger speakers.
- Press the AUDIO switch down (-) to raise the volume from the passenger speakers while lowering the volume from the rider speakers.

**Passenger Controls: FLHTCUSE3**

## UP/MODE SEL/DN Switch

See Passenger UP/MODE SEL/DN Switch: FLHTCUSE3. The passenger **MODE SEL** switch gives the passenger control of radio band selection, tuning, CD/MP3 operation and all functions of the hand grip mounted **MODE SEL** switch.

*NOTE:*

*For information on routing audio signals to the passenger speakers and headsets, refer to Audio Routing and Mixing Combinations.*

**Passenger UP/MODE SEL/DN Switch: FLHTCUSE3**

## PTT and +/VOL/- Switch

See Passenger PTT/+/VOL/- Switch: FLHTCUSE3. The **PTT/+/VOL/-** switch on the right side of speaker box allows the passenger to talk over the intercom or transmit over the CB as well as to raise or lower the rear headset volume.

See E in Display Examples. When the rear headset volume is adjusted, a F (front) and R (rear) bar graph appear in the LCD display.

*NOTES:*

- *The passenger VOL switch affects only the passenger headset. The hand grip mounted **AUDIO** switch is the master volume control, and used in conjunction with the FADER, affects both the rider and passenger speaker volume.*
- *With stereo receiver tuning, radio band selection, CD/MP3 track selection or other functions, simultaneous use of front and rear **MODE SEL** switches may cause operation to be suspended until either rider or passenger controls are released.*

**Passenger PTT/+/VOL/- Switch: FLHTCUSE3**

### Intercom Operation

## Operation

To speak over the intercom, press and hold either rider or passenger **PTT** switch to enable the microphones. Both microphones are active while one or both **PTT** switches are pressed.

*NOTE:*

*Always verify that the CB is off so that private intercom conversations will not be transmitted.*

## Activating the Intercom and the VOX Microphones

Press and hold the **INT** button on the front panel, to open the Intercom Setup display.

See D in Display Examples. To activate the intercom (INT) and the VOX microphones, press soft key **1** to turn the intercom ON.

The intercom will activate in Intercom Setup with VOX sensitivity and headset volume level settings from the previous use. VOX sensitivity and headset volume are adjusted in Int Setup only.

To exit Int Setup, press and release the **MODE SEL** switch or the **INT** button.

To make adjustments to VOX sensitivity after exiting Intercom Setup, re-enter Intercom Setup by pressing **INT**.

*NOTE:*

*To ensure privacy, the intercom can only be heard through the headsets.*

To turn OFF the intercom and the VOX microphones, press the **INT** button to open the Intercom Setup display and press the On/Off soft key (**1**).

## Adjusting VOX Sensitivity

---

VOX sensitivity should be adjusted so that the microphones break VOX at a normal voice level.

Enter Intercom Setup by pressing the **INT** button. Press the ON or **1** soft key to turn the intercom on.

See G in Display Examples. Press the **MODE SEL** switch **UP** or **DN** or press the **4** or **5** soft key to initiate the VOX display. The LCD displays VOX sensitivity as a bar graph with a smaller bar to indicate the center of the 14 bars. A higher number of bars indicates greater sensitivity while a lower number means less sensitivity.

Continue to use **MODE SEL** on the right hand grip to adjust the sensitivity level. Press **MODE SEL UP** to make the microphone more sensitive. Press the **MODE SEL DN** to reduce sensitivity. To exit Setup, press and release the **MODE SEL** switch.

*NOTES:*

- *The receiver retains the sensitivity level from the previous setup. However, if power is removed from the receiver, VOX sensitivity defaults to mid level.*
- *VOX sensitivity may have to be adjusted if either microphone is unintentionally activated because the microphone misinterprets radio, road or background sound as conversation.*

When VOX is set to its maximum, the microphone is always open. The VOX display will read Open.

When VOX is set to lowest value, the microphone is closed and the VOX display reads Closed.

## Adjusting Rider Headset Volume

---

The rider intercom volume is only adjustable in Intercom Setup.

See E in Display Examples. Enter Intercom Setup, speak into microphone and adjust the intercom volume with the AUDIO switch on the left hand grip. Press **AUDIO +** to raise the volume and **AUDIO -** to lower the volume. The LCD displays a dashed line that changes length with the level.

See F in Display Examples. When the headset volume has been adjusted to the bottom of its range, Mute will appear in the volume display.

To exit Intercom Setup, press and release the **MODE SEL** switch.

**⚠WARNING**

**Set intercom volume level and other controls before riding to minimize adjustments on the road. Distractions can lead to loss of control, resulting in death or serious injury. (00088a)**

## Adjusting Passenger Headset Volume

The passenger intercom volume is only adjustable in Intercom Setup.

Enter Intercom Setup. Speak into the microphone and adjust the intercom volume with the **AUDIO** switch on the right speaker box on the passenger's backrest. Press **AUDIO +** to raise the volume and **-** to lower the volume. The LCD displays a bar graph that changes length with the level.

See F in Display Examples. When the headset volume has been adjusted to the bottom of its range, Mute will appear in the volume display.

To exit Intercom Setup, press and release the **MODE SEL** switch or press the INT pushbutton.

### CB Operation

## Activating the CB

See H and I in Display Examples. To activate the Citizen Band transceiver, press and release the **COM** pushbutton on the front panel. Press soft key **1** to turn the CB ON/OFF. The CB will activate in CB Setup with squelch threshold and channel settings from the previous use. CB channels are selected in CB Setup.

To exit CB Setup but leave the receiver with the CB active, press and release the **MODE SEL** switch or the **COM** pushbutton.

To turn off the CB, press the **COM** button to enter CB Setup. Press soft key **1** to turn the CB ON and Off.

**CAUTION**

**There are no adjustments internal to the CB transceiver chassis that can be performed without risking non-compliance with Federal Communications Commission (FCC) rules. Refer to the original equipment manufacturer for any service required during the warranty period. For transmitter service after the warranty period, refer to a certified repair service. Any frequency determining components, such as crystals, or power determining semi-conductors, etc., should only be replaced with the original component manufacturer's part or equivalent. Substitutes can result in violation of FCC rules. (00175a)**

## Entering CB Setup

See J in Display Examples. With the CB on, press **COM** to enter CB Setup. The LCD displays CB SETUP in the upper half and the CB channel appears in the lower half.

To exit CB Setup, press and release the **MODE SEL** switch.

After exiting CB Setup with the CB still active, re-enter CB Setup by pressing and releasing the **COM** soft key.

## Selecting a Channel

In CB Setup, use the **MODE SEL** switch to select a CB channel. Press and release **MODE SEL UP** or **DN** to switch channels one at a time.

Soft keys 4, 5 and 6 can be used to preset CB channels.

If the **MODE SEL** switch is held up or down, tuning continuously wraps around the ends of the channels.

See K in Display Examples. When squelch is broken, the CB in the display inverts. If the squelch is not broken and the another source is playing, CB is displayed.

**⚠WARNING**

**Set CB channel, squelch threshold and volume before riding to minimize adjustments on the road. Distractions can lead to loss of control, resulting in death or serious injury. (00089a)**

## Preset Channels

See J in Display Examples. Up to 3 CB channels can be preset. Press and hold a soft key (4, 5, 6) to preset a CB channel.

Once set, press the preset soft key to switch to the preset channel when the CB display is active.

## Adjusting Squelch

See K in Display Examples. The CB signal is passed to the speakers or headsets only if signal strength exceeds the threshold set with the squelch control switch (**PTT/+/SQ/-**). When CB signals exceed the threshold, they are said to "break squelch." Refer to Squelch Control Switch.

- To lower the threshold to process the weakest CB signals, press **SQ -** or rearward.
- To raise the threshold to process stronger signals, press **SQ +** or forward.

In the LCD, a dashed line changes length with the setting.

**Squelch Control Switch**

| SQ (-) REARWARD | SQ (+) FORWARD |
|---|---|
| More signals | Fewer signals |
| More noise | Less noise |
| More static | Less static |
| Unwanted signals | Better sound quality |

## Transmitting

To transmit, press and hold the **PTT** switch. Transmission is over the CB channel displayed in the LCD. To end transmission, release **PTT**.

## Adjusting Volume

Refer to Audio Routing and Mixing Combinations. See L in Display Examples. To adjust volume of the CB in the speakers or headset, Press **AUDIO +** to raise the volume or **-**lower the volume. CB volume is adjustable when squelch is broken or when the display is in CB Setup.

A dashed line that changes length with the volume setting is displayed.

**CAUTION**

**Operating the CB radio without an antenna or with a broken antenna cable can result in damage to the transmitter circuitry. (00176a)**

## CB Range

Maximum transmission range can only be expected under stable weather conditions in flat, open country.

**Weather:** In times of atmospheric disturbances, such as rain, snow, or even sunspots, the CBs range can be reduced.

**Terrain:** Buildings, hills, valleys or any elevated objects or depressions that either block or create a longer path between transmitter and receiver will reduce or disrupt communications.

**Obstructions:** Transmissions may be cut off under a viaduct or inside a tunnel or parking garage.

*NOTE:*

*The CB transmitter is the most powerful allowed under Federal law, but since there is no large steel area to create a ground plane, it may not transmit as strongly as when mounted in a car or truck.*

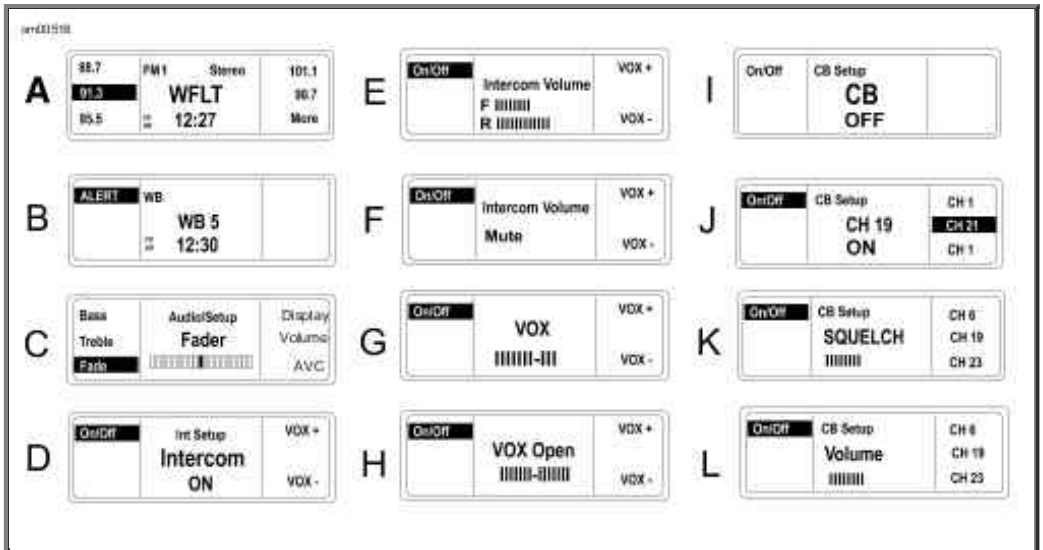


**Display Examples**

## Audio Routing and Mixing

---

# General

---

Refer to Audio Routing and Mixing Combinations. Whether audio is routed to the headsets, speakers or both depends on the **SPKR** control switch and the **INT** and **CB** buttons on the receiver.

A single audio source routed to headset or speaker can be controlled with the riders **AUDIO** switch or the passenger **VOL** switch.

*NOTE:*

*The passenger volume control switch affects only the passenger headset. The handlebar mounted **AUDIO** switch is the master volume control, and used in conjunction with the fader, affects both the rider and passenger speaker volume.*

**Audio Routing and Mixing Combinations**

| AUDIO ROUTING COMBINATIONS | | | VOLUME CONTROL |
|---|---|---|---|
| **SPEAKER CONTROL SWITCH** | **AUDIO SOURCE(S)** | **AUDIO OUT** | **AUDIO ± OR VOL ±** |
| Off or Forward (Headsets) | Music* | Headsets | Music* |
| | CB | Headsets | CB (During reception or SETUP) |
| | Intercom | Headsets | Intercom (Only in SETUP) |
| | Intercom and music* | Both in the headsets | Music |
| | CB and music* | CB in the headsets (Music is muted during CB reception) | CB (During reception or SETUP) |

| | | | |
|---|---|---|---|
| | Intercom and CB | Both in the headsets<br><br>(Music is muted during CB reception) | CB (During reception or Setup) |
| Center<br><br>(Speakers and headsets) | Music* | Speakers | Music* |
| | CB | Headsets | CB (During reception or SETUP) |
| | Intercom | Headsets | Intercom (Only in SETUP) |
| | Intercom and music* | Intercom in the headsets<br><br>Music* in the speakers | Music* |
| | CB and music* | CB in the headsets<br><br>Music* in the speakers<br><br>Music is muted during CB recption | CB |
| | Intercom and CB | Both in the headsets<br><br>(Music is MUTED during CB reception) | CB* |
| On or rearward<br><br>(Speakers) | Music* | Speakers | Music* |
| | CB | Speakers | CB (During reception or SETUP) |
| | Intercom | Headsets | Intercom (Only in SETUP) |
| | Intercom and music* | Intercom in the headsets.<br><br>Music in the speakers. | Music |
| | CB and music* | CB in the speakers<br><br>(When squelch is broken) | CB |
| | Intercom and CB | Intercom in the headsets<br><br>(CB in the speakers MUTED during CB reception) | CB |
| * Music = Radio, CD player or auxiliary (AUX) audio source. | | | |

**Troubleshooting: FLHTCUSE3**

---

## Operational Troubleshooting

---

Refer to Operational Troubleshooting: Advanced Audio System. Use the following table to identify rider or passenger control settings that prevent intended operation.

*NOTE:*

*See the Touring Models ELECTRICAL DIAGNOSTIC MANUAL for all system diagnosis and electrical troubleshooting information.*

**CAUTION**

**There are no serviceable parts inside the unit; leave all servicing to qualified service personnel. Disassembly of the unit could result in equipment damage and/or equipment malfunction. (00172a)**

**⚠WARNING**

**Do not disassemble unit. Laser radiation is present if disc player is disassembled and the interlock fails or is defeated. Exposure to laser radiation could lead to death or serious injury. (00087a)**

## Radio Fuses

If it is necessary to replace the radio fuses, follow the fuse replacement procedures in this manual or see your Harley-Davidson dealer for service.

See Radio Fuses: FLHTCUSE3. Radio fuses are located in the fuse block under the left side cover.

- The 15 Amp power fuse (1) allows power to the radio through activation of an internal relay.
- The 15 Amp memory fuse (2) provides direct and continuous power to the radio memory and time-of-day clock, and when the internal relay is activated, feeds the main circuits of the radio as well.
- The 30 Amp amplifier fuse (3) provides power to the amplifier mounted under the Tour-Pak.

Remove the radio fuses and inspect the element. Replace the fuse if the element is burned or broken.

*NOTE:*

*See Radio Fuses: FLHTCUSE3. Spare fuses (15 and 30 Amp) can be found in the fuse block cover.*

**Operational Troubleshooting: Advanced Audio System**

| THIS | CAN PREVENT THIS |
|---|---|
| Squelch broken | Fairing music |
| | Headset music |
| | Passenger speaker music |
| Squelch unbroken | CB audio |
| CB off or low volume | CB audio |
| Front or rear PTT on | Fairing music |
| | Headset music |
| | Passenger speaker music |

| | |
|---|---|
| | CB audio |
| Handlebar volume low | Fairing music |
| | Headset music |
| | Passenger speaker music |
| Passenger headset volume low | Passenger headset music and CB audio |
| Fairing SPKR back to speaker | Headset music and headset CB audio |
| Fairing SPKR forward to headset | Fairing music and CB audio |
| INT off | Voice communications (Unless PTT is pressed) |

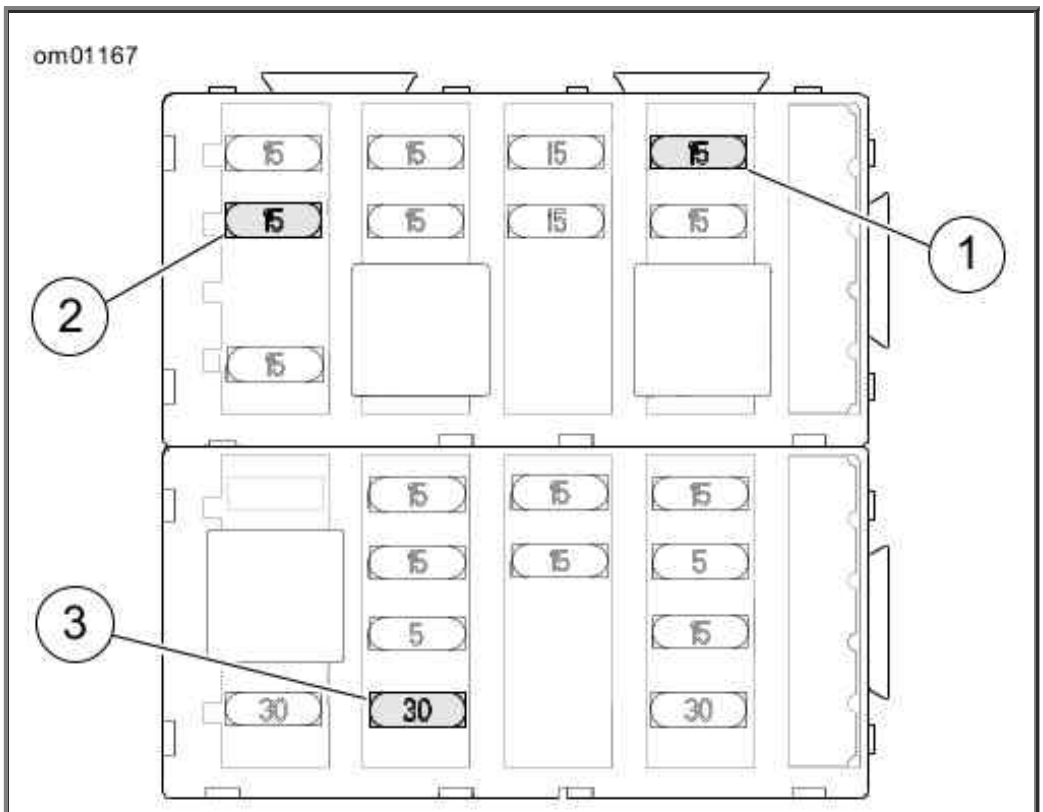


1. Radio power (15 amp)
2. Radio memory (15 amp)
3. Amplifier (30 amp)

**Radio Fuses: FLHTCUSE3**

## Smart Security System

### Harley-Davidson Smart Security System

## Components

See Security Module w/Antenna. The Harley-Davidson Smart Security System (H-DSSS) consists of a Hands-Free Security Module (HFSM) (1) and a Hands-Free Antenna (2) mounted on the motorcycle, and a Hands-Free Fob **carried** by the rider/passenger.

After parking the motorcycle, turn the ignition key to OFF and the Smart Security System will automatically **arm** within five seconds. While armed, the starter and ignition are disabled and the rider may leave the motorcycle knowing that the module will activate an alarm if someone tampers with the ignition or attempts to move the motorcycle.

If the fob is present, the module will automatically **disarm** when the ignition key is turned to IGNITION or ACCESS.

*NOTE:*

*Do not relocate the module or the antenna on the motorcycle.*

## Options

---

Several options are available for the Harley-Davidson Smart Security System from the Harley-Davidson Genuine Motor Accessories and Motor Parts catalog. Options include:

- Smart Siren and Smart Siren II.
- Security Pager and Security Pager Receiver II.
- Replacement Fobs.

See a Harley-Davidson dealer for details.

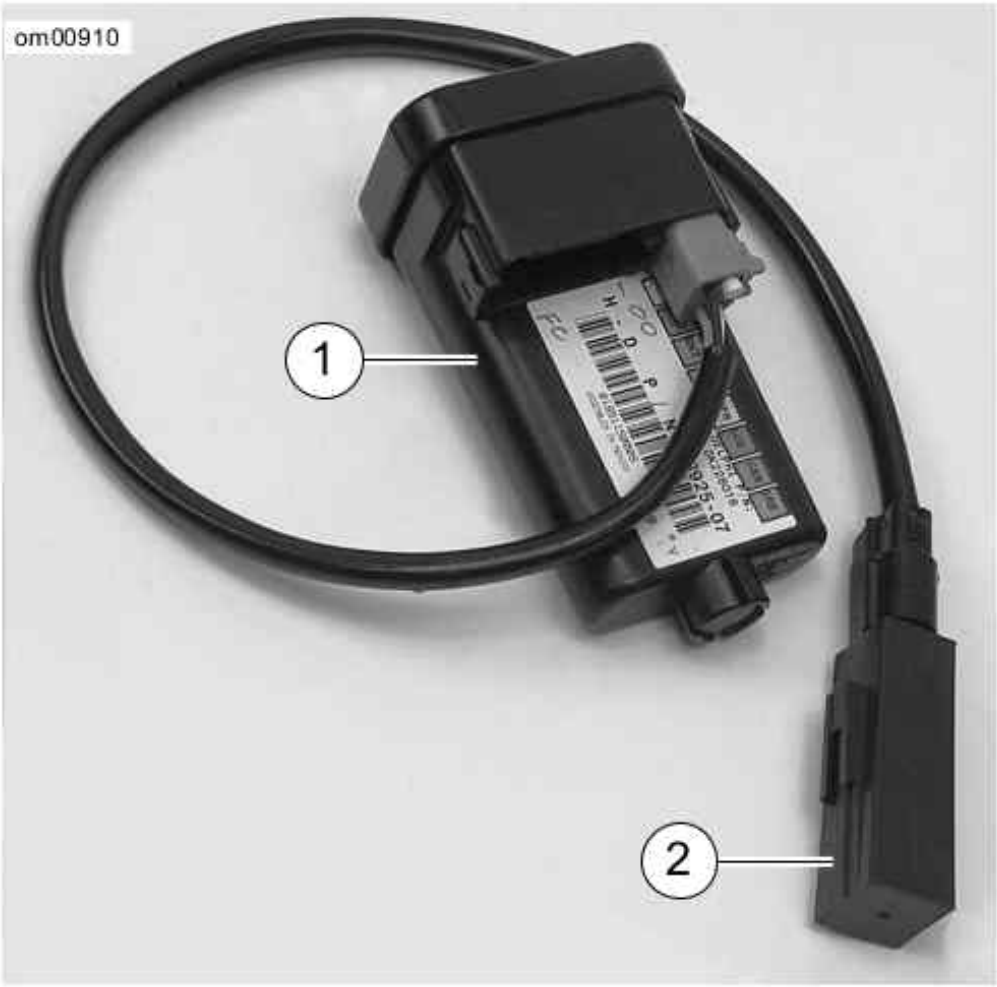


1. Hands-Free Security Module
2. Hands-Free Antenna

**Security Module w/Antenna**

### FCC Regulations

FCC ID: L2C0027TR IC ID: 3432A-0027TR

FCC ID: L2C0028TR IC ID: 3432A-0028TR

This device complies with Part 15 of the FCC Rules and with RSS-210 of Industry Canada rules. Operation is subject to the following two conditions:

(1) This device may not cause harmful interference, and (2) This device must accept any interference received, including interference that may cause undesired operation.

**WARNING:** Changes or modifications not expressively approved by the party responsible for compliance could void the user's authority to operate the equipment.

The term "IC:" before the radio certification number only signifies that Industry Canada technical specifications were met.

### Hands-Free Fob

## Fob Assignment

See Hands-Free Fob: Smart Security System. Hands-Free Fobs are electronically assigned to the Harley-Davidson Smart Security System by a Harley-Davidson dealer so that the module can recognize a fob's unique signal. Only two fobs can be assigned to the module at any one time.

Replacement fobs can be purchased from a dealership but can only be assigned to the motorcycle by a trained Harley-Davidson technician.

*NOTES:*

- *The reusable label found on the fob packaging lists the serial number of the fob. For reference, fix the label to a blank "NOTES" page in the Owner's Manual.*
- *The serial number of the fob is also found on the inside of the fob. See Fob Battery.*
- *The module will arm only if the fob has been assigned by a Harley-Davidson dealer and a Personal Identification Number (PIN) has been entered in the system. The PIN should be recorded on the Personal Information page in the front of this Owner's Manual and on the removable wallet card.*
- *Should the rider misplace the fob or if the fob fails, the rider can refer to the wallet card and use the PIN to manually disarm the system. Refer to Arming and Disarming: FLHTCUSE3 and Troubleshooting: FLHTCUSE3.*
- *The PIN can easily be changed by the rider at any time. Refer to Personal Identification Number (PIN).*

**Hands-Free Fob: Smart Security System**

## Riding with a Fob

- Always carry the fob when riding, loading, fueling, moving, parking or servicing the motorcycle. Carry the fob in a convenient pocket.
- Do not leave the fob attached to the handlebars or store the fob in a saddlebag or Tour-Pak®. Unintentionally leaving the fob with the motorcycle when it's parked prevents the system from activating the alarm.
- Do not ride with the fob stored in a metal case or with the fob closer than 3.0 in. 76 mm to a cell phone, PDA, display or other electronic device. Any electromagnetic interference may prevent the fob from disarming the system.
- For added security, always lock the fork and remove the ignition key when parked. If the fob is within range and the motorcycle is unlocked, tampering with the motorcycle will not activate the alarm.

### Personal Identification Number (PIN)

The Personal Identification Number (PIN) is a number that can be used to disarm the Harley-Davidson Smart Security System in case an assigned fob is misplaced, fails or if the fob and module cannot communicate because of electromagnetic interference.

A PIN is a five-digit number (1-9, no zeros).

## Changing the PIN

To maintain security, the rider can change the PIN at any time. Refer to Changing the PIN.

**Changing the PIN**

| STEP NO. | ACTION | WAIT FOR CONFIRMATION | NOTES |
|---|---|---|---|
| 1 | Select a 5-digit (1 thru 9) PIN and record on the wallet card from Owner's Manual. | | |
| 2 | With an assigned fob present, turn **IGN** key **IGNITION**-OFF-**IGNITION**-OFF-**IGNITION.** | | |
| 3 | Press **left** turn signal switch **3 times**. | | |
| 4 | Press **right** turn signal switch **1 time** and release. | Turn signals will flash 3 times. Current PIN will appear in odometer. The first digit will be flashing. | See figure showing the odometer window with PIN display. |
| 5 | Enter first digit (a) of new PIN by pressing **left** turn signal switch **a** times. | | |
| 6 | Press **right** turn signal switch **1 time** and release. | The new digit (a) will replace the current in odometer window. | |
| 7 | Enter second digit (b) of new PIN by pressing **left** turn signal switch **b** times. | | |
| 8 | Press **right** turn signal switch **1 time** and release. | The new digit (b) will replace the current in odometer window. | |
| 9 | Enter third digit (c) of new PIN by pressing **left** turn signal switch **c** times. | | |
| 10 | Press **right** turn switch **1 time** and release. | The new digit (c) will replace the current in odometer window. | |
| 11 | Enter fourth digit (d) of new PIN by pressing **left** turn signal switch **d** times. | | |
| 12 | Press **right** turn switch **1 time** and release. | The new digit (d) will replace the current in odometer window. | |
| 13 | Enter fifth digit (e) of new PIN by pressing **left** turn signal switch **e** times. | | |
| 14 | Press **right** turn switch **1 time** and release. | The new digit (e) will replace the current in odometer window. | |
| 15 | Before the module rearms, turn the ignition key to **OFF**. | The odometer will return to mileage. | Turning the ignition key to **OFF** stores the new PIN in the module. |

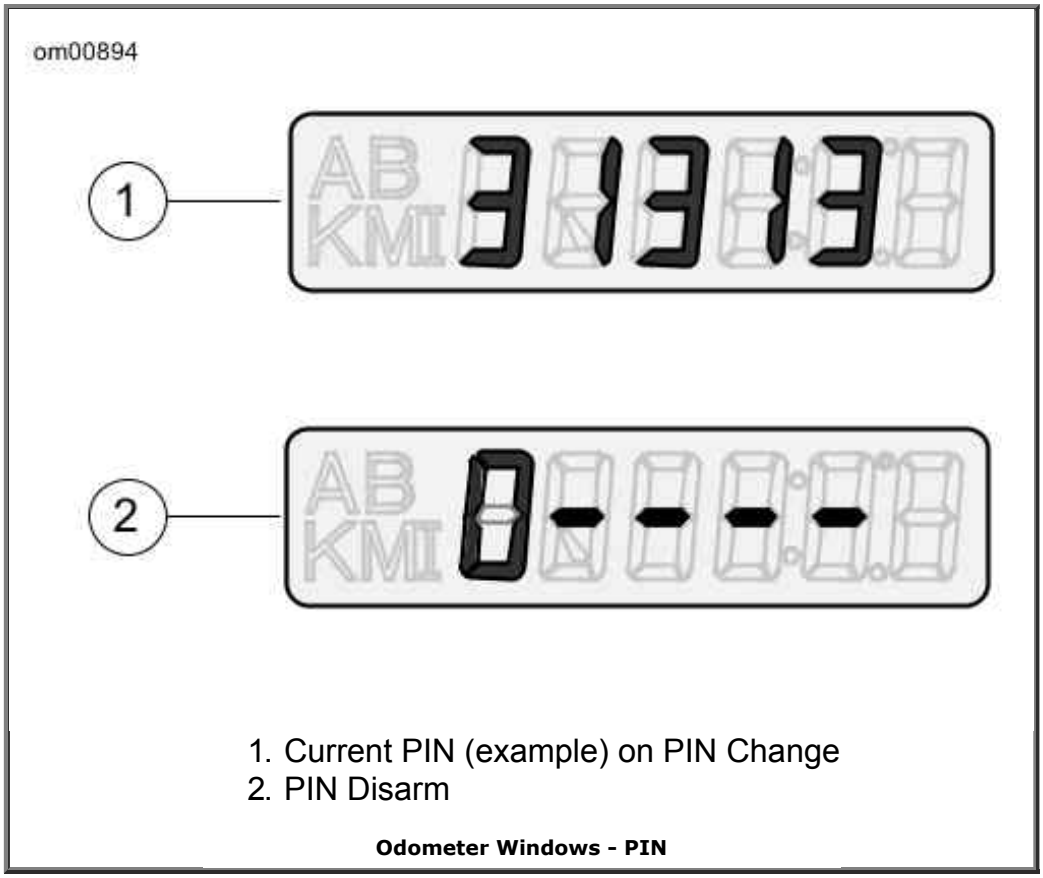


1. Current PIN (example) on PIN Change
2. PIN Disarm

**Odometer Windows - PIN**

## Security Status Indicator

See Security Status Indicator. The illuminated key icon in the speedometer face indicates the status of the Harley-Davidson Smart Security System.

- **Armed:** A key icon that blinks approximately every 3 seconds indicates that the system is armed.
- **Disarmed:** After the ignition/headlamp switch is turned to IGNITION and the system disarms, the key icon will remain illuminated for approximately four seconds and then turn off.
- **Service:** A key icon that remains illuminated longer than four seconds indicates that service of the module is required.

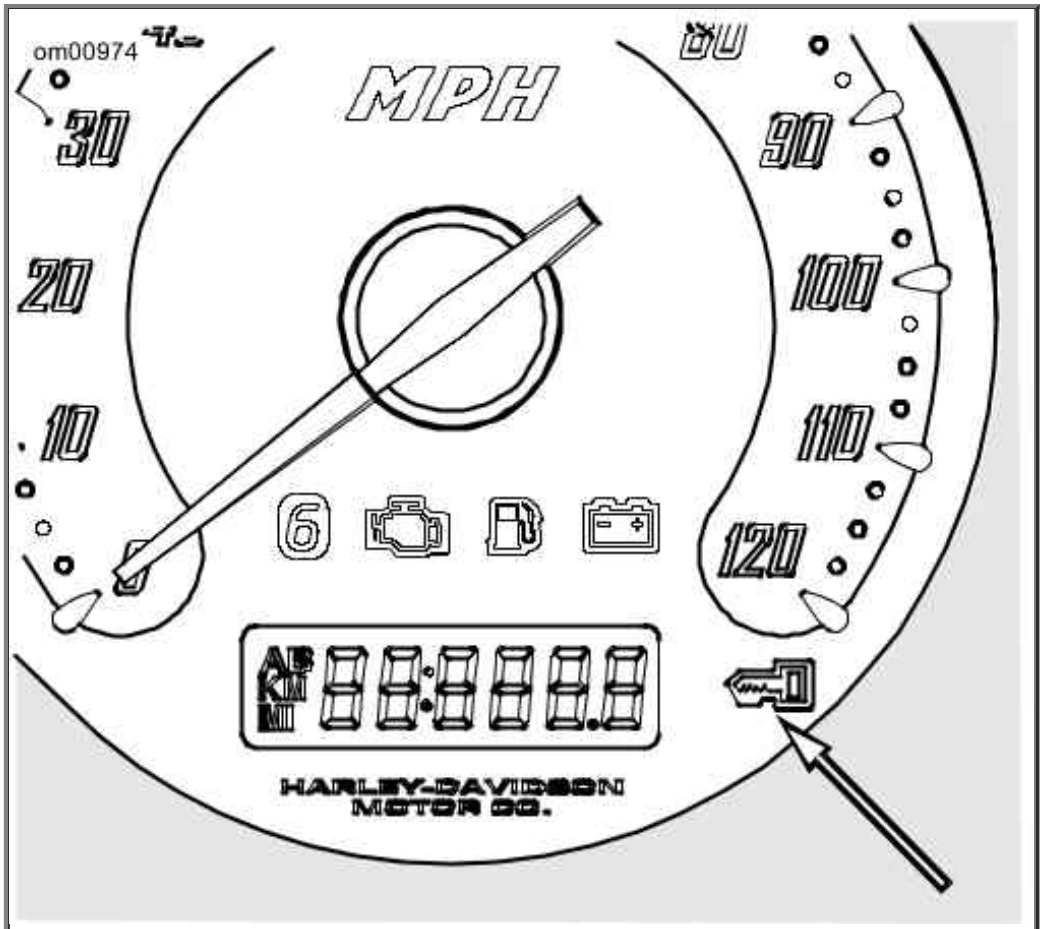

Security Status Indicator

**Arming and Disarming: FLHTCUSE3**

## Arming

When the motorcycle is parked and the ignition key is turned to OFF, the Harley-Davidson Smart Security System arms automatically within five seconds if no motion is detected. Even when the fob is present, the system will arm.

On arming, the turn signals will flash twice and the optional siren will chirp twice. While armed, the key icon in the speedometer face will flash every three seconds.

*NOTE:*

*The HFSM must be in the Chirp Mode for the siren to chirp on arming or on disarming. See Siren Chirp Mode (Confirmation).*

## Disarming

Once disarmed, the rider may ride or move the motorcycle for parking, storage or service without setting off the alarm.

**Fob:** An armed Smart Security System is automatically disarmed when the ignition key is turned to IGNITION with the fob present.

When the module disarms, the optional siren will chirp once and the key icon will illuminate for a solid four seconds and then turn off.

*NOTE:*

*Any motion, like lifting the motorcycle up off of its jiffy stand, or turning the ignition key to IGNITION and the module will electronically "poll" for the presence of the fob. If the fob is present, the system disarms.*

**Personal Identification Number (PIN):** If the fob is misplaced or if the present fob fails to communicate with the module, the system can be disarmed with the Personal Identification Number (PIN).

## Disarming with a PIN

---

Do not turn handlebars, straddle seat or lift motorcycle off the jiffy stand. During a PIN disarm, if the Smart Security System detects motorcycle motion the system will activate the alarm.

**Entering a PIN to Disarm Harley-Davidson Smart Security System**

| STEP NO. | ACTION | WAIT FOR CONFIRMATION | NOTES |
|---|---|---|---|
| 1 | If necessary, verify the current 5-digit PIN. | | Should be recorded on wallet card. |
| 2 | Turn ignition key to **IGNITION**. | | |
| 3 | Quickly (within 2 seconds of turning ignition key) hold **both** turn signal switches in until confirmation. | Key icon flashes at fast rate. In the odometer window, a flashing dash will be followed by four more dashes. | See figure showing the odometer window with PIN display. Five dashes will appear in the odometer window. |
| 4 | Enter first digit (**a**) in the PIN by pressing **left** turn switch **a times.** | The first digit (**a**) in the odometer will be the first digit in the PIN. | |
| 5 | Press **right** turn switch **1 time.** | The first digit is stored and the dash will flash. | Serves as enter key. |
| 6 | Enter second digit (**b**) in the PIN by pressing **left** turn switch **b times.** | The second digit (**b**) in the odometer will be the second digit in the PIN. | |
| 7 | Press **right** turn switch **1 time.** | The second digit is stored and the next dash will flash. | Serves as enter key. |
| 8 | Enter third digit (**c**) in the PIN by pressing **left** turn switch **c times.** | The third digit (**c**) in the odometer will be the third digit in the PIN. | |
| 9 | Press **right** turn switch **1 time**. | The third digit is stored and the next dash will flash. | Serves as enter key. |
| 10 | Enter fourth digit (**d**) in the PIN by pressing **left** turn switch **d times**. | The fourth digit (**d**) in the odometer will be the fourth digit in the PIN. | |
| 11 | Press **right** turn switch **1 time.** | The fourth digit is stored and the next dash will flash. | Serves as enter key. |
| 12 | Enter fifth digit (**e**) in the | The fifth digit (**e**) in the | |

| | | | |
|---|---|---|---|
| | PIN by pressing **left** turn switch **e times.** | odometer will be the fifth digit in the PIN. | |
| 13 | Press **right** turn switch **1 time**. | The fifth digit is stored. The key icon stops blinking. | Smart Security System is disarmed. |

*NOTES:*

- *At any time during a PIN disarm, if the fob is brought within range of the motorcycle, the Smart Security System will disarm when the module receives the coded signal from the fob.*
- *If a mistake is made while entering PIN, wait two minutes before another disarming attempt.*
- *The Smart Security System will remain disarmed until the ignition key is turned to OFF.*

## Hazard Warning 4-Way Flasher

If it should be necessary to leave a motorcycle parked along side a roadway, the hazard warning four-way flashers can be turned ON and the Smart Security System armed.

**To arm the H-DSSS with the Hazard Warning 4-Way Flashers ON**

1. Turn ignition key to ACCESS.
2. Simultaneously press both left and right turn signal switches to turn the four-way flashers ON.
3. Turn the ignition key to OFF to arm the Smart Security System.

**To Turn Hazard Warning 4-Way Flashers OFF**

1. Turn ignition key to IGNITION.
2. Simultaneously press the left and right turn signal switches.

### Alarm

## Warnings

Once armed, if the motorcycle is moved or lifted up off of its jiffy stand or if the ignition key is turned to IGNITION and the fob is not present, the alarm will warn the operator with three alternate flashes of the turn signals and a chirp of the optional siren.

Within four seconds, if the motorcycle is back on its jiffy stand and no further motion is detected and/or the ignition key is turned to OFF, the module will remain armed without activating the alarm.

If the motorcycle motion continues or the ignition key is not turned back to OFF, the module will issue a second warning four seconds after the first.

*NOTE:*

*During warnings and alarms, the starter motor and the ignition circuits are disabled.*

## The Alarm

If the Smart Security System is still detecting motion and/or if the ignition key has not been turned back to OFF after a second warning, the system will activate the alarm.

When activated, the Smart Security System will:

- Alternately flash the four turn signals.
- See Optional Smart Siren. Sound the optional siren.

**Duration:** The alarm will stop within 30 seconds and if no motion is detected, the alarm will not restart.

However, if motorcycle motion continues the system will repeat the 30 second alarm and recheck for motion. The alarm will repeat this 30 second alarm cycle for five minutes (10 cycles) or until the alarm is deactivated.

*NOTE:*

*The alarm will also activate the LED, vibration or audible modes of a Harley-Davidson Security Pager. A pager can operate either in silent or in combination with an optional Smart Siren. The range of a pager can be up to 0.5 mile (0.8 km). See a Harley-Davidson dealer for details.*

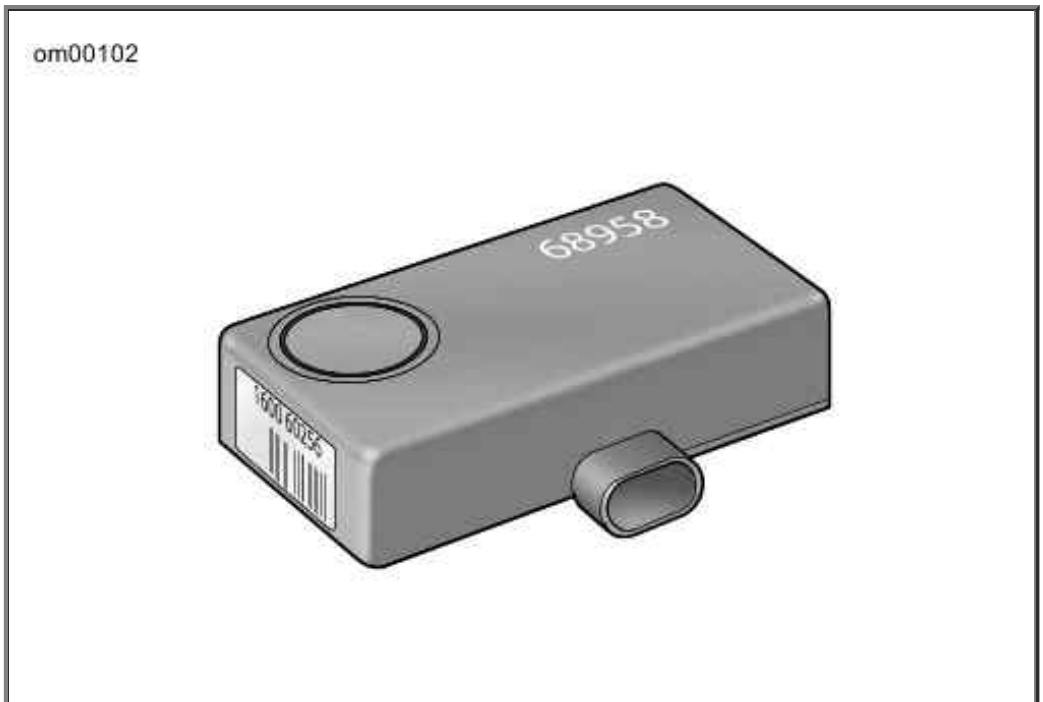


**Optional Smart Siren**

## Deactivate the Alarm

**Key Fob:** Bring the fob to the motorcycle. After the module identifies that the fob is present, the system will terminate the alarm.

### Siren Chirp Mode (Confirmation)

## Chirpless Mode

In the chirpless mode, the siren does not chirp on arming or disarming.

*NOTE:*

*Even when armed in the chirpless mode, the siren still chirps warnings on movement and will activate the alarm through cycles.*

## Chirp Mode

On arming in the chirp mode, the siren responds with two chirps. When disarming, the siren responds with a single chirp.

## Switching Modes

Cycling quickly through two armings and disarmings will switch the system from either the chirpless mode or the chirp mode to its opposite.

1. With the fob present, the Ignition Switch ON and the system disarmed, turn the Ignition Switch OFF.
2. When the system arms (2 flashes of turn signals), immediately turn the Ignition Switch back ON.
3. Wait until the security lamp goes out, then immediately turn the Ignition Switch OFF.
4. When the system arms (2 flashes of turn signals), immediately turn the Ignition Switch ON and wait for system to disarm.

### Transport Mode

It is possible to arm the security system without enabling the motion detector for one ignition cycle. This allows the vehicle to be picked up and moved in an armed state, however, any attempt to start the engine will trigger the alarm.

**To Enter Transport Mode:**

1. Set the Engine Stop Switch to OFF.
2. Turn the Ignition Switch to IGNITION.
3. With an assigned fob within range, turn the Ignition Switch from IGNITION to ACCESS, or OFF to ACCESS, depending on switch sequence.
4. Immediately press both the left and the right turn signal switches. This must be done within five seconds of turning the Ignition Switch to ACCESS.
5. After the turn signals flash once, turn the Ignition Switch to OFF and the module is armed.

**To Exit Transport Mode:**

Return the system to normal operation:

1. With the fob present, turn the Ignition Switch to IGNITION to disarm the HFSM. To cancel the transport mode, set the Engine Stop Switch to RUN.

### Storage and Service Departments

## Long Term Parking

To maintain arming, store the fob beyond the range of the module. If the motorcycle is to be moved while parked, have the fob present.

If the motorcycle will not be operated for several months, such as during the winter season, follow the Owner's Manual instructions for storage. Refer to Motorcycle Storage.

## Service Departments

When the motorcycle is to be left at a Harley-Davidson dealer, there are two options:

1. Leave an assigned fob with the dealer.
2. To maintain possession of the fob, ask the dealer to disable the module for service (service mode) before leaving the dealership.

### Fob Battery

## Replacing the Battery

Replace the key fob battery every year.

1. See Hands-Free Fob Battery. Slowly turn a thin blade in the thumbnail slot (1) on the side of the fob to separate the two halves.
2. Remove the battery (2) and discard.

   *NOTE:*

   *Dispose of the old battery in accordance with local regulations.*

3. Install a **new** battery (Panasonic 2032 or equivalent) with the positive (+) side down.
4. Align the two halves of the fob and snap together.

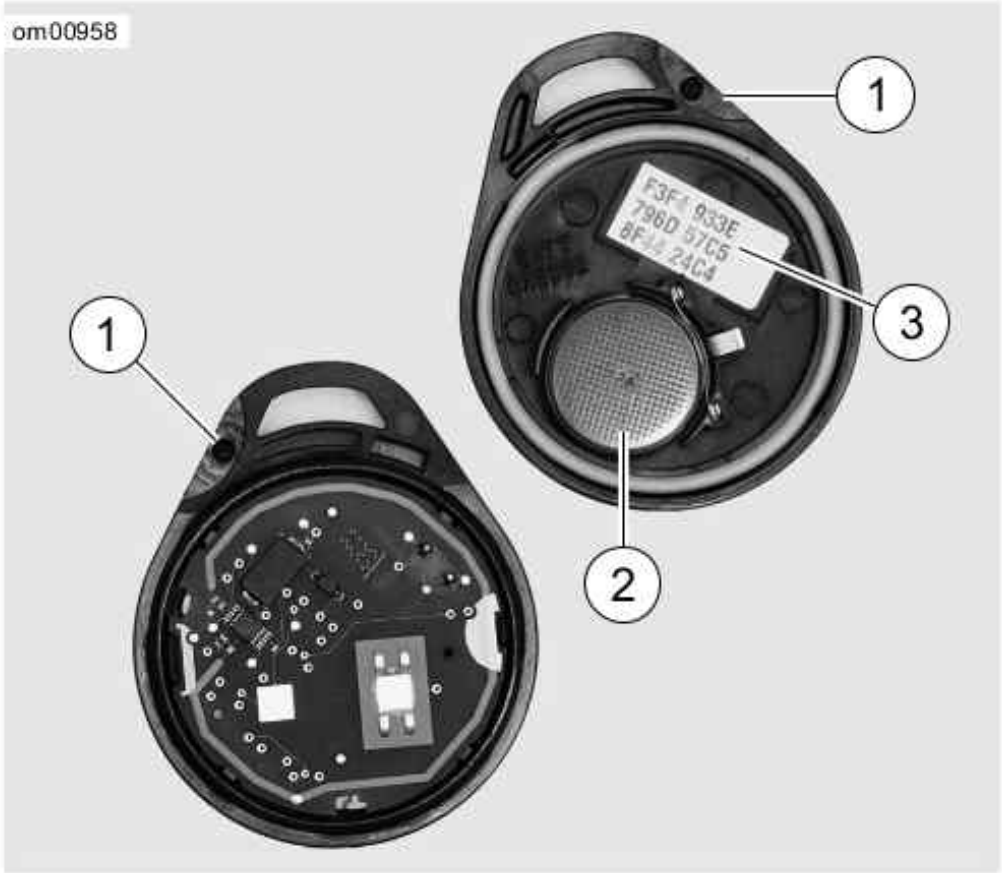


1. Thumbnail slot
2. Battery
3. Fob serial number

**Hands-Free Fob Battery**

**Power Disconnects**

## Optional Siren

On a power disconnect, to prevent the module from actuating the optional siren:

1. Verify that the fob is present.
2. Turn the ignition key to IGNITION.
3. Pull the maxi-fuse from its holder or disconnect the battery.

**Troubleshooting: FLHTCUSE3**

## Key Icon

If the system key icon stays illuminated while riding, see a Harley-Davidson dealer.

## Fob

With the fob present, if the Smart Security System continues to actuate warnings and alarms, one

of the following can be the cause:

1. **Electromagnetic Interference:** Other electronic devices, power lines, or other electromagnetic sources can cause the Smart Security System to operate inconsistently.

    a. Verify that the fob is not in a metal enclosure or within 3.0 in. 76 mm of any other electronic devices.

    b. Place the fob on the seat and turn the ignition key to IGNITION. After the module disarms, return the fob to a convenient location.

    c. Move motorcycle at least 15 feet 5 meters from the spot of interference.

2. **Discharged Fob Battery:** Use the PIN to disarm the module. Replace the battery. Refer to Fob Battery.

3. **A Damaged Fob:** Use the PIN to disarm the motorcycle. Replacement fobs are available for purchase from a Harley-Davidson dealer.

## Siren

---

- If the siren does not chirp two or three times on a valid arming command from the security module, the siren is either in the Chirpless Mode, not connected, not working, or the siren wiring was opened or shorted while the siren was disarmed.
- If the siren is armed and the internal siren battery is dead, shorted, disconnected, or has been charging for a period longer than 24 hours, the siren will respond with three chirps on arming instead of two.
- The internal siren battery may not charge if the vehicle's battery is less than 12.5 volts.
- If the siren enters the self-driven mode where it is powered from the siren's internal 9 volt battery, the turn signal lamps may or may not alternately flash. If the security module activates the siren, the turn signal lamps will alternately flash. If the siren has been armed and a security event occurs, and the siren is in self-driven mode, the siren will alarm for 20 to 30 seconds and then turn off for 5 to 10 seconds. This alarm cycle will be repeated ten times if the siren is in the self-driven mode.

# Operation

### Operating Recommendations: FLHTCUSE3

---

**⚠WARNING**

**Motorcycles are different from other vehicles. They operate, steer, handle and brake differently. Unskilled or improper use could result in loss of control, death or serious injury. (00556c)**

- **Take a rider training course.**
- **Read Owner's Manual before riding, adding accessories or servicing.**
- **Wear a helmet, eye protection and protective clothing.**
- **Never tow a trailer.**

**CAUTION**

**Do not run the engine at extremely high RPM with clutch disengaged or transmission in neutral. Running an engine at high RPM can result in engine damage. (00177a)**

- The maximum recommended safe engine speed is 5500 RPM.
- Do not idle engine unnecessarily for more than a few minutes with motorcycle standing still.

**CAUTION**

**Air-cooled engines require air movement over the cylinders and heads to maintain proper operating temperature. Extended periods of idling or parade duty can overheat the engine, resulting in serious engine damage. (00178a)**

An engine running long distances at high speed must be given closer than ordinary attention to avoid overheating and possible engine damage.

This applies particularly to a motorcycle equipped with windshield and fairing.

*NOTE:*

*Have the engine checked regularly and keep it well tuned.*

**⚠WARNING**

**When riding on wet roads, brake efficiency and traction are greatly reduced. Failure to use care when braking, accelerating or turning on wet roads can cause loss of control, which could result in death or serious injury. (00041a)**

*NOTE:*

*When descending upon a long, steep grade, downshift and use engine compression together with intermittent application of both brakes to slow the motorcycle.*

**⚠WARNING**

**Continuous use of brake causes overheating and reduced efficiency, which could result in death or serious injury. (00042a)**

**CAUTION**

**Do not coast for long distances with the engine off or idling. The transmission is properly lubricated only when the engine is running. Coasting long distances can result in transmission damage. (00180b)**

**⚠WARNING**

**Do not tow a disabled motorcycle. Towing can adversely affect stability and handling, which could result in death or serious injury. (00017a)**

### Break-in Riding Rules

## The First 500 Miles (800 Kilometers)

The sound design, quality materials, and workmanship that are built into your new Harley-Davidson will give you optimum performance right from the start.

To allow your engine to wear in its critical parts, we recommend that you observe the riding rules provided below for the first 500 miles 800 kilometers . Adherence to these suggestions will help to assure good future durability and performance.

1. During the first 50 miles 80 kilometers of riding, keep the engine speed below 4000 RPM in any gear. Do not lug the engine by running or accelerating at very low RPM, or by running at high RPM longer than needed for shifting or passing.
2. Up to 500 miles 800 kilometers , vary the engine speed and avoid operating at any steady engine speed for long periods. Engine speed up to 5000 RPM in any gear is permissible.
3. Drive slowly and avoid fast starts at wide open throttle until the engine has warmed up.
4. Avoid lugging the engine by not running the engine at very low speeds in higher gears.
5. Avoid hard braking. New brakes need to be broken-in by moderate use for the first 200 miles 300 kilometers .

### Pre-Riding Checklist

**⚠WARNING**

**Read the CONTROLS AND INDICATORS section before riding your motorcycle. Failure to understand the operation of the motorcycle could result in death or serious injury. (00043a)**

Before riding your motorcycle at any time, make a general inspection to be sure it is in safe riding condition.

**⚠WARNING**

**Stop the engine when refueling or servicing the fuel system. Do not smoke or allow open flame or sparks near gasoline. Gasoline is extremely flammable and highly explosive, which could result in death or serious injury. (00002a)**

**⚠WARNING**

**Avoid spills. Slowly remove filler cap. Do not fill above bottom of filler neck insert, leaving air space for fuel expansion. Secure filler cap after refueling. Gasoline is extremely flammable and highly explosive, which could result in death or serious injury. (00028a)**

**⚠WARNING**

**Use care when refueling. Pressurized air in fuel tank can force gasoline to escape through filler tube. Gasoline is extremely flammable and highly explosive, which could result in death or serious injury. (00029a)**

1. Verify fuel is present in tank and add fuel if required.
2. Adjust mirrors to proper riding positions.
3. Verify oil is present in oil tank.
4. Check controls to make sure they operate properly. Operate the front and rear brakes, throttle, clutch and shifter. All controls should operate freely without binding.
5. Check steering for proper operation by turning the handlebars through the full operating range. Handlebars should turn smoothly without binding.

**⚠WARNING**

**Be sure tires are properly inflated, balanced and have adequate tread. Inspect your tires regularly and see a Harley-Davidson dealer for replacements. Riding with excessively worn, unbalanced or under-inflated tires can adversely affect stability and handling, which could result in death or serious injury. (00014a)**

6. Check tire condition and pressure. Incorrect pressure will result in poor riding characteristics and can affect handling and stability. Refer to tire specifications for correct inflation pressure to use.

**⚠WARNING**

**Be sure headlamp, tail and stop lamp and turn signals are operating properly before riding. Poor visibility of rider to other motorists can result in death or serious injury. (00478b)**

7. Check all electrical equipment and switches including the headlamp, stop lamp, turn signals and horn for proper operation.
8. Check for any fuel, oil or hydraulic fluid leaks.

9. Check secondary belt for wear or damage.
10. Service your motorcycle as necessary.

**Starting the Engine: FLHTCUSE3**

## General

**CAUTION**

**The engine should be allowed to run slowly for 15-30 seconds. This will allow the engine to warm up and let oil reach all surfaces needing lubrication. Failure to comply can result in engine damage. (00563b)**

The engine is equipped with Electronic Sequential Port Fuel Injection (ESPFI). The amount of fuel delivered to the engine is electronically control by the Engine Control Module (ECM). Do not roll the throttle before starting. Rolling the throttle before starting the motorcycle is unnecessary.

## Starting

**⚠WARNING**

**Shift transmission to neutral before starting engine to prevent accidental movement, which could result in death or serious injury. (00044a)**

1. Turn ignition/headlamp key switch to IGNITION position. Do not roll the throttle.

   *NOTE:*

   *The engine lamp will light for approximately 4 seconds and you will hear the fuel pump purr for approximately 2 seconds as it operates to fill the fuel lines with gasoline.*

2. See Right Handlebar Controls: FLHTCUSE3. Turn the OFF/RUN switch to RUN position.
3. Raise the jiffy stand (required for international models).
4. Squeeze the clutch lever in against the hand grip.

   *NOTE:*

   *To activate the starting system, the clutch interlock circuitry requires the clutch be disengaged, clutch lever pulled in against left handgrip, and/or the transmission be shifted to the neutral position (green neutral lamp lit).*

5. Press the starter button to start the motorcycle.
6. When the engine has started, you can operate your motorcycle as you normally would after raising the jiffy stand.

*NOTE:*

*If the fuel tank becomes completely dry, it may take a few seconds longer to start the motorcycle after filling the tank. It is not necessary to take any extra measure before starting the motorcycle.*

## Automatic Compression Release (ACR)

The FLHTCUSE3 is equipped with an Automatic Compression Release (ACR). During starting, a small auxiliary valve in the cylinder head is opened automatically by the ECM. The open valve releases the air compressed in the cylinder heads and allows the starter motor to turn the high compression engine over at a faster rate to aid starting.

After starting and during normal operation, the ACR valves remain closed.

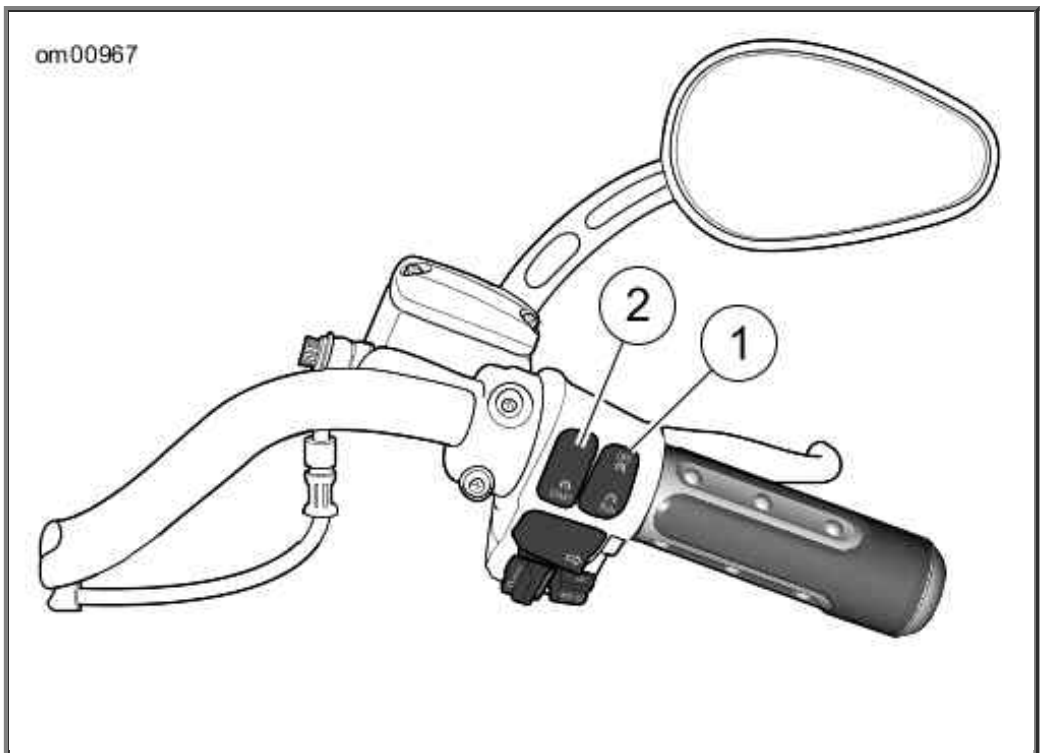


1. Engine OFF/RUN switch
2. Engine START switch

**Right Handlebar Controls: FLHTCUSE3**

### Engine Idle Temperature Management System

For those riders who frequently find themselves in riding conditions where the vehicle is subjected to prolonged idle conditions or traffic congestion, the motorcycle is equipped with an Engine Idle Temperature Management System (EITMS) to provide limited cooling of the rear cylinder.

When the engine is in EITMS operation, you may notice a difference in idle cadence. Additionally, there may be a unique exhaust odor. These are both considered to be normal conditions.

Vehicles are delivered from the factory with EITMS disabled. EITMS can be enabled or disabled by the rider using the following procedure.

1. Turn the ignition switch to the ON position (do not start the motorcycle).
2. Push the throttle to roll-off position and hold.

3. See Warning Lamps: FLHTCUSE3. After approximately 3 seconds, the cruise indicator lamp will either flash green (EITMS enabled) or red (EITMS disabled).

4. Repeat the procedure as needed to enable or disable EITMS.

**Cruise Control: FLHTCUSE3**

---

## Operation

---

The cruise control is designed to be safely operated with minimum movement by the rider and all rider control actions are natural and easy.

*NOTES:*

- *The rider always over-rides and controls the system.*
- *The system will not work at vehicle speeds below 30 mph 48 km/h or above 85 mph 137 km/h .*
- *The system is managed by a small computer. The tachometer provides information to disengage the system if the engine RPM suddenly increases.*
- *Besides the computer, the system has other components: a stepper-motor (controlled by the computer), which operates the throttle during CRUISE operation, a clutch which disengages the stepper-motor during non-cruise operation and several internal switches, all sending information to the computer.*
- *The system will allow rider to increase speed 10 mph 16 km/h or more (depending on how hard the rider rolls on the throttle and the condition of the bike) over the SET point before deactivating. This feature allows the rider to momentarily increase speed, if necessary. Rolling on the throttle to greatly increase speed may deactivate the system.*

## Engaging Cruise Control

---

1. See Cruise Control Icon in Tachometer Face. Rock the CRUISE/SPOT rocker switch on the inner fairing cap forward to ON. The orange light in the CRUISE/SPOT switch will illuminate and the cruise control icon in the tachometer face will illuminate orange.

2. With the motorcycle traveling at the desired cruise speed of 30-85 mph 48-137 km/h , momentarily push the RESUME/SET switch on the right handlebar to SET. After a delay of about 1-1/2 seconds, the icon in the tachometer face will turn green to indicate the selected cruising speed is locked in.

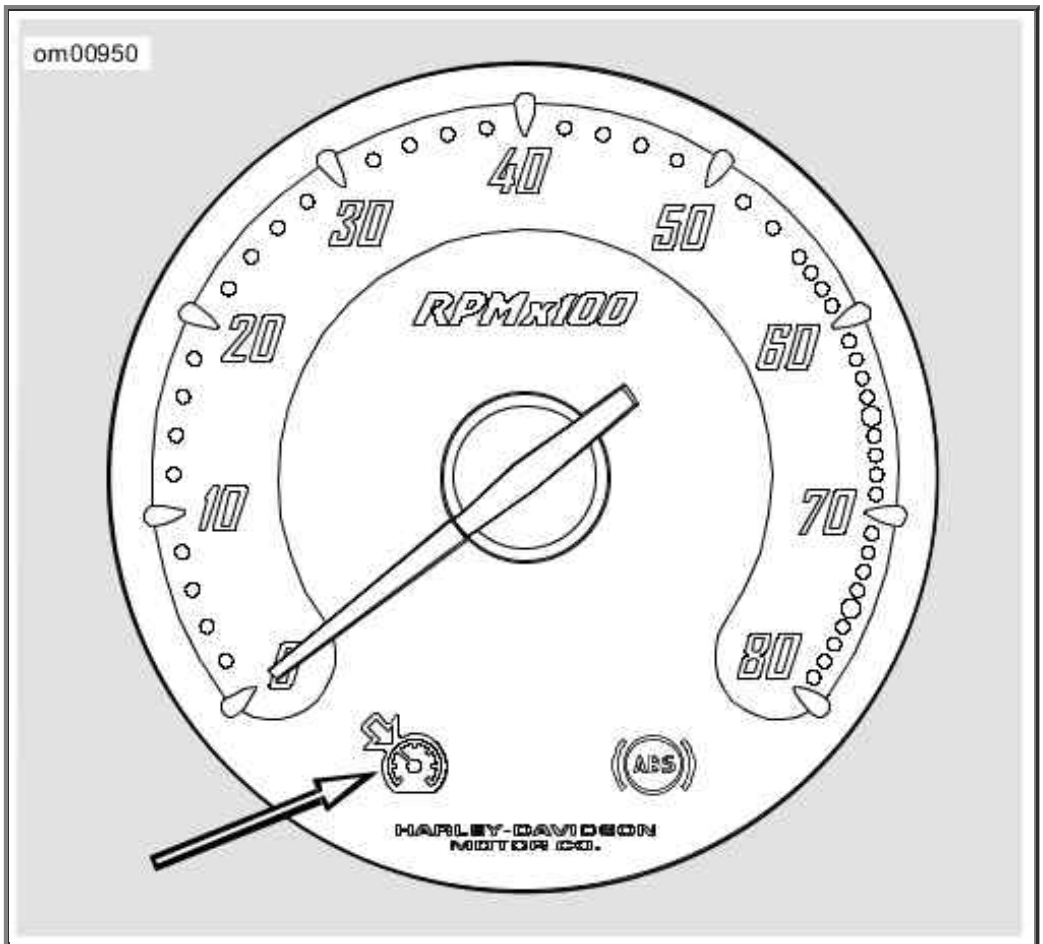


**Cruise Control Icon in Tachometer Face**

## Disengaging Cruise Control

The cruise control automatically disengages whenever the cruise control module receives one of the following inputs:

1. Front and/or rear brake is applied.
2. Throttle is rolled back or closed, thereby actuating idle cable roll-off (disengage) switch.
3. Motorcycle clutch is disengaged (module senses too great an increase in RPM).
4. Vehicle speed is out of the operating range.

*NOTE:*

*Rolling on the throttle more than 10 mph 16 km/h above the set speed may also deactivate the cruise control.*

When the cruise is disengaged, the green engaged cruise icon on the face of the tachometer changes to orange. The orange cruise icon remains ON until the CRUISE/SPOT rocker switch on the inner fairing cap is rocked forward to disengage cruise.

However, should you decide to SET a cruise speed, RESUME last set speed, ACCELERATE or DECELERATE, simply press the RESUME/SET switch.

## Resuming Cruise Speed

If the system is disengaged using one of the methods described under DISENGAGING CRUISE CONTROL, the system is still ON should you decide to RESUME the set speed. To accomplish this, simply press the RESUME/SET switch to RESUME.

*NOTE:*

*The computer will hold the SET speed in memory for the RESUME function. If the vehicle speed drops more than 15 mph 72 km/h below the SET speed, speed can no longer be RESUMED. If cruise operation is still desired, press the RESUME/SET switch to SET to reset the cruise speed.*

## Accelerating Above Cruise Speed

1. With the cruise speed set, momentarily press the RESUME/SET switch to RESUME to increase the speed by 1 mph 1.6 km/h .
2. Pressing and holding the RESUME/SET switch at RESUME will cause the system to continue to increase speed in increments of approximately 1 mph 1.6 km/h until the switch is released. There is a delay of about 2 seconds before the speed increases.

## Decelerating Cruise Control

1. With the cruise speed set, momentarily press the RESUME/SET switch to SET to reduce the speed by 1 mph 1.6 km/h .
2. Pressing and holding the RESUME/SET switch at SET will cause the system to continue to reduce speed in increments of approximately 1 mph 1.6 km/h until the switch is released. There is a delay of about 2 seconds before the speed decreases.

## Deactivating Cruise Control

Rock the CRUISE/SPOT rocker switch forward. The orange light on the switch will go out to indicate the system is OFF.

*NOTES:*

*System will NOT work if:*

- *An uphill grade is so long and/or steep; the throttle cables are pulled their full length when the system tries to maintain vehicle speed. This feature prevents stretching the cables.*
- *Rider operates bike at vehicle speeds below 30 mph 48 km/h or above 85 mph 137 km/h .*
- *Throttle cables are too tight. See dealer.*
- *Brake lamps are on constantly. See dealer.*

### Stopping the Engine

1. Stop the engine by turning OFF the engine stop switch on right handlebar.
2. Turn OFF the ignition/headlamp key switch. If the engine should be stalled or stopped in any way, turn off the ignition/headlamp key switch at once to prevent battery discharge.

### Shifting Gears: FLHTCUSE3

## Getting Started

**CAUTION**

**The clutch must be fully disengaged before attempting a gear shift. Failure to fully disengage the clutch can result in equipment damage. (00182a)**

Gear shift pattern is first gear down, next five gears up.

*NOTE:*

*Always start engine with transmission in neutral. Always start motorcycle forward motion from first gear.*

1. With motorcycle engine running and jiffy stand retracted, pull the clutch hand lever in against handlebar grip to fully disengage clutch.
2. Push the foot shift lever down to end of its travel and release. The transmission is now in first gear.
3. To start forward motion, release the clutch lever slowly to engage the clutch and at the same time, open throttle gradually.

## Upshift (Acceleration)

Refer to Upshift (Acceleration) Gear Speeds: Six Speed. Engage second gear after the motorcycle has reached at the appropriate shifting speed.

**Upshift (Acceleration) Gear Speeds: Six Speed**

| GEAR CHANGE | MPH | KPH |
|---|---|---|
| First to second | 15 | 25 |
| Second to third | 25 | 40 |
| Third to fourth | 35 | 55 |
| Fourth to fifth | 45 | 70 |
| Fifth to sixth | 55 | 85 |

1. Close the throttle.
2. Disengage the clutch (pull clutch lever in).
3. See Upshift Pattern: Six Speed. Lift the gear shift lever up to the end of its travel and release.
4. Engage the clutch (release clutch lever) and gradually open the throttle.
5. Repeat the previous steps to engage third, fourth, fifth, and sixth gears.

*NOTES:*

- *Disengage the clutch completely before each gear change.*
- *Partially close the throttle so the engine will not drag when clutch is again engaged (clutch lever released).*

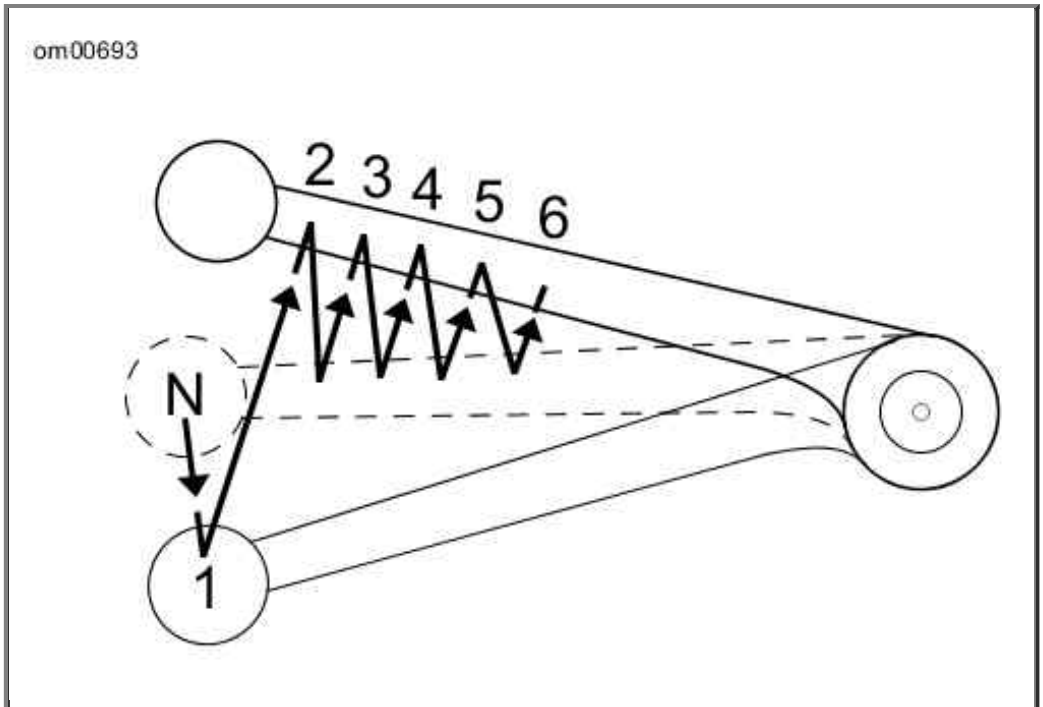


**Upshift Pattern: Six Speed**

## Downshift (Deceleration)

**⚠WARNING**

**Do not downshift at speeds higher than those listed in the Changing Gear Speeds table. Shifting to lower gears when speed is too high can cause the rear wheel to lose traction and lead to loss of vehicle control, which could result in death or serious injury. (00045a)**

Gear shift pattern is first gear down; next five gears up. Refer to Downshift (Deceleration) Gear Speeds: Six Speed for shifting speeds.

**Downshift (Deceleration) Gear Speeds: Six Speed**

| GEAR CHANGE | MPH | KPH |
|---|---|---|
| Sixth to fifth | 50 | 80 |
| Fifth to fourth | 40 | 65 |
| Fourth to third | 30 | 50 |
| Third to second | 20 | 30 |
| Second to first | 10 | 15 |

*NOTE:*

*The shifting points shown in the tables are a recommendation. Vehicle owners may determine that their own individual shifting patterns may differ than those stated and are additionally*

*appropriate for individual riding styles.*

See Downshift Pattern: Six Speed. When engine speed decreases, as in climbing a hill or running at a reduced speed, shift to the next lower gear while partially closing the throttle so the engine accelerates as soon as the clutch lever is released.

*NOTES:*

- *Disengage the clutch completely before each gear change.*
- *Partially close the throttle so the engine will not drag when clutch is again engaged (clutch lever released).*

**CAUTION**

**Shift to neutral before stopping engine. Shifting mechanism can be damaged by shifting gears while engine is stopped. (00183a)**

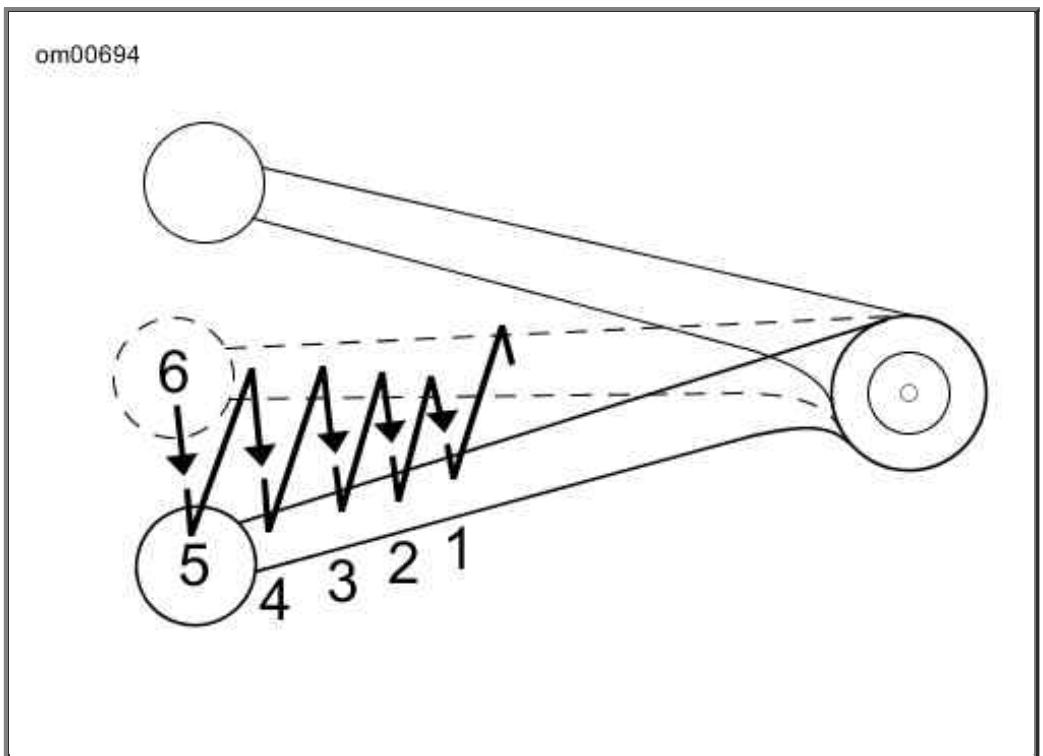


**Downshift Pattern: Six Speed**

# Maintenance and Lubrication

## Safe Operating Maintenance

**⚠WARNING**

**Perform the service and maintenance operations as indicated in the regular service interval table. Lack of regular maintenance at the recommended intervals can affect the safe operation of your motorcycle, which could result in death or serious injury. (00010a)**

Good maintenance creates a safe motorcycle. A careful check of certain equipment must be

made after periods of storage. Also, frequently inspect the motorcycle between the regular service intervals to determine if additional maintenance is necessary.

Check the following items:

1. Tires for correct pressure, abrasions or cuts.
2. Belt and primary chain for proper tension, wear or damage.
3. Brakes, steering and throttle for responsiveness and freedom from binding.
4. Brake fluid level and condition. Hydraulic lines and fittings for leaks. Also, check brake pads and discs for wear.
5. Cables for fraying or crimping and free operation.
6. Engine oil and primary chaincase/transmission fluid levels.
7. Headlamp, tail lamp, brake lamp and turn signals for proper operation.

## Break-in Maintenance

*NOTE:*

*The performance of new motorcycle initial service is required to keep your new motorcycle warranty in force and to assure proper emissions system operation.*

Refer to Regular Service Intervals: 2008 FLHTCUSE3. After a new motorcycle has been ridden its first 1000 miles 1600 kilometers , it should be taken to an authorized Harley-Davidson dealer for initial service operations.

## Engine Lubrication: Synthetic Oil

Engine oil is a major factor in the performance and service life of the engine. Always use the proper grade of oil for the lowest temperature expected before the next scheduled oil change. Your authorized dealer has the proper oil to suit your requirements.

Your motorcycle comes equipped with Screamin' Eagle® SYN3 Synthetic Motorcycle Lubricant. If SYN3 is not available and addition of motor oil is required, the first choice would be to add H-D 360 SAE 20W50 to the SYN3 for engine lubrication. Although H-D 360 is compatible with SYN3, we suggest the mixture of the fluids be changed as soon as possible.

If H-D 360 is not available, the second choice would be to add an acceptable diesel engine oil. We again suggest the mixture of the fluids be changed as soon as possible. DO NOT add diesel engine oil to the primary chaincase or transmission.

To switch lubricant to H-D 360, completely drain the SYN3 before filling with H-D 360. A residual amount of fluid will remain. It is not required to flush out the residual fluid.

**CAUTION**

**Do not switch lubricant brands indiscriminately because some lubricants interact chemically when mixed. Use of inferior lubricants can damage the engine. (00184a)**

Refer to Recommended Synthetic Engine Oils. If it is necessary to add oil and Screamin' Eagle SYN3 Synthetic Motorcycle Lubricant is not available, use an oil certified for diesel engines. Acceptable diesel engine oil designations include: CF-4, CG-4, CH-4 and CI-4.

The preferred viscosities for the diesel engine oils in descending order are: 20W50, 15W40 and 10W40.

At the first opportunity, see an authorized dealer to change back to 100 percent Harley-Davidson oil.

**Recommended Synthetic Engine Oils**

| H-D TYPE | VISCOSITY | H-D RATING | LOWEST AMBIENT TEMPERATURE | COLD WEATHER STARTS<br><br>BELOW 50° F (10° C) |
|---|---|---|---|---|
| Screamin' Eagle SYN3 Synthetic Motorcycle Lubricant | SAE 20W50 | HD 360 | Above 40° F (4° C) | Excellent |
| H-D Multi-grade | SAE 10W40 | HD 360 | Below 40° F (4° C) | Excellent |
| H-D Multi-grade | SAE 20W50 | HD 360 | Above 40° F (4° C) | Good |
| H-D Regular Heavy | SAE 50 | HD 360 | Above 60° F (16° C) | Poor |
| H-D Extra Heavy | SAE 60 | HD 360 | Above 80° F (27° C) | Poor |

## Checking Oil Level: FLHTCUSE3

**CAUTION**

**Oil level cannot be accurately measured on a cold engine. For pre-ride inspection, with motorcycle leaning on jiffy stand on level ground, oil should register on dipstick between arrows when engine is cold. Do not add oil to bring the level to the FULL mark on a COLD engine. (00185a)**

For dipstick location, see Oil Dipstick Location: FLHTCUSE3.

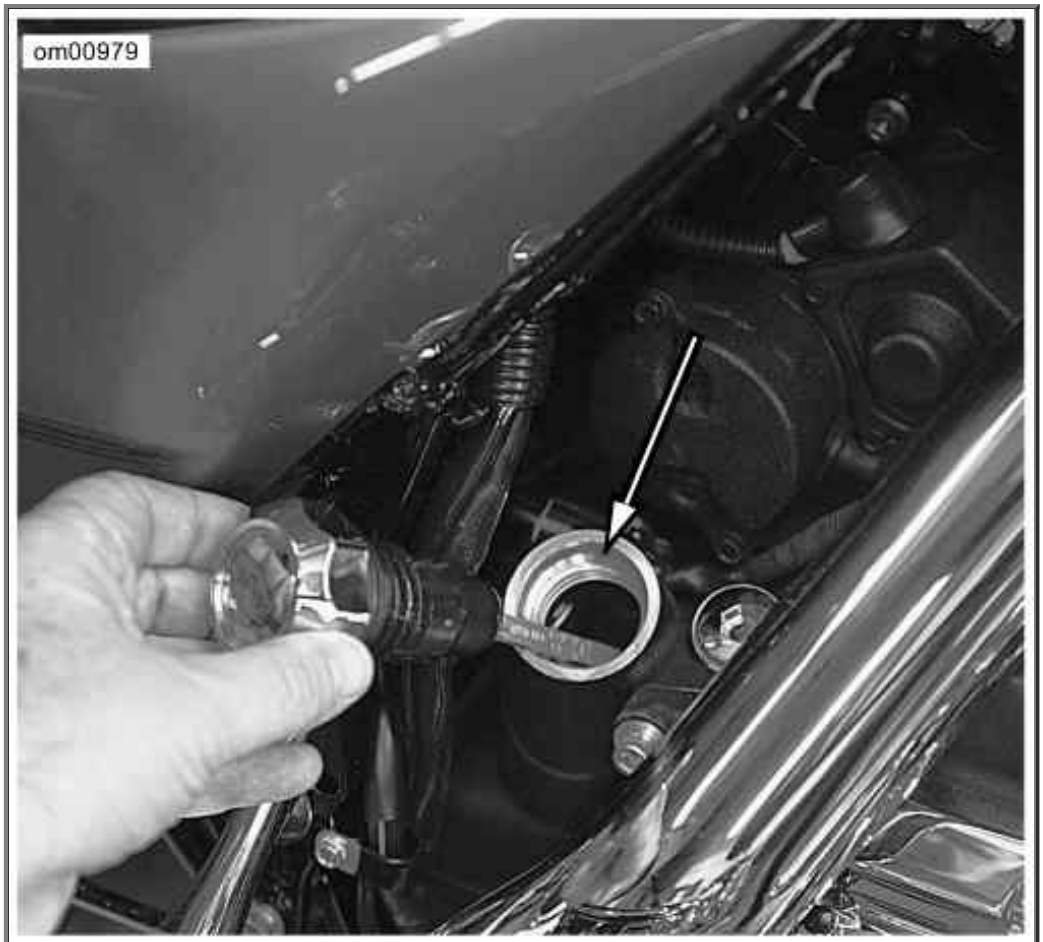


**Oil Dipstick Location: FLHTCUSE3**

## Oil Level Cold Check

As part of the preride inspection, perform engine oil level **COLD CHECK** as follows:

1. With the motorcycle resting on the jiffy stand on level ground, unthread the filler plug cap to remove the dipstick.
2. Wipe off the dipstick. Insert it back into the oil pan and thread the plug cap completely into the fill spout.
3. See Engine Oil Level: FLHTCUSE3. Remove the dipstick and verify the level of the oil. The correct oil level should register between the two arrows (1) on the dipstick.
4. If oil level is at or below the lower arrow, add only enough oil to bring the level to the middle of the two marks on the dipstick.

*NOTE:*

*The reverse side of the dipstick measures oil levels on Harley-Davidson models equipped with a sidecar. For the FLHTCUSE3, be sure the oil level measurement is taken on the side of the dipstick marked with the HOT FULL and ADD QT arrows and cross hatched scale.*

## Oil Level Hot Check

Perform engine oil level **HOT CHECK** as follows:

1. Ride motorcycle until engine is at normal operating temperature.
2. With the vehicle resting on the jiffy stand on level ground, allow engine to idle for 1-2 minutes. Turn engine off.
3. Unthread the filler plug to remove the dipstick.
4. Insert it back into the oil pan and thread the plug completely into the fill spout.
5. See Engine Oil Level: FLHTCUSE3. Remove the dipstick and note the level of the oil. Add only enough oil to bring the level to the FULL mark (2). Do not overfill.

   *NOTE:*

   *Refer to Recommended Synthetic Engine Oils. Use only recommended oil specified in Engine Lubrication: Synthetic Oil.*

6. Return the dipstick to the filler and thread-in the filler plug.
7. Start engine and carefully check for oil leaks around drain plug and oil filter.

Engine oil level should be checked only when engine is at normal operating temperature.

*NOTE:*

*The engine will require a longer warm up period in colder weather.*

**CAUTION**

**Do not allow hot oil level to fall below Add/Fill mark on dipstick. Doing so can result in equipment damage and/or equipment malfunction. (00189a)**

**CAUTION**

**Do not overfill oil tank. Doing so can result in oil carryover to the air cleaner leading to equipment damage and/or equipment malfunction. (00190a)**

- Check engine oil supply at each complete fuel refill.
- Refer to Regular Service Intervals: 2008 FLHTCUSE3. Oil should be changed at specified intervals in normal service at warm or moderate temperatures.
- Oil change intervals should be shorter in cold weather or severe operating conditions. See Winter Lubrication.

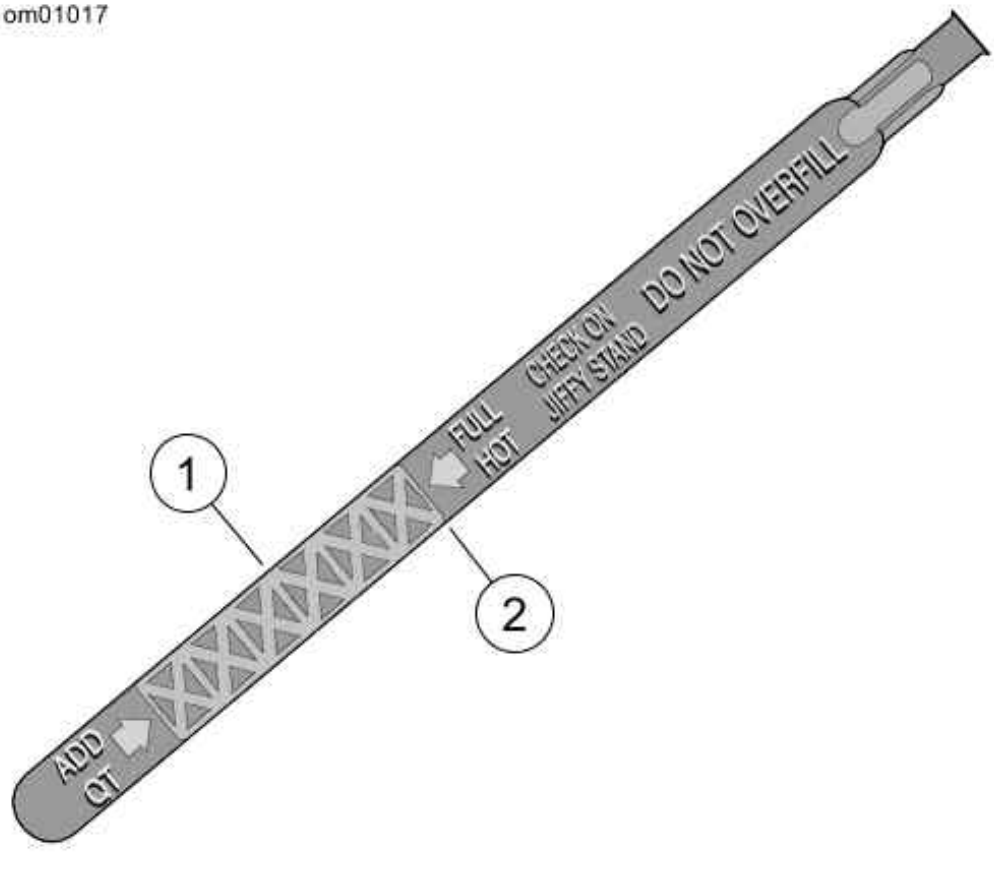


1. Cold check level
2. Hot check level

**Engine Oil Level: FLHTCUSE3**

## Changing Oil and Oil Filter: FLHTCUSE3

---

**CAUTION**

**Do not switch lubricant brands indiscriminately because some lubricants interact chemically when mixed. Use of inferior lubricants can damage the engine. (00184a)**

Twin Cam equipped motorcycles require the premium oil filter (Part No. 63798-99A Chrome or Part No. 63731-99A Black).

Refer to Regular Service Intervals: 2008 FLHTCUSE3. Oil should be changed after the first 1000 miles 1600 kilometers for a new engine and at regular intervals in normal service at warm or moderate temperatures.

1. Ride motorcycle until engine is warmed up to normal operating temperature. Turn engine off.

2. Locate oil filler plug/dipstick on right side of vehicle at top of transmission case. Unthread cap to remove the oil filler plug/dipstick.

3. See Transmission Filler Plug/Dipstick Lubricant Level. Locate oil drain plug at front left side of the oil pan. Remove the oil drain plug. Do not remove the allen plug. Allow oil to drain completely.

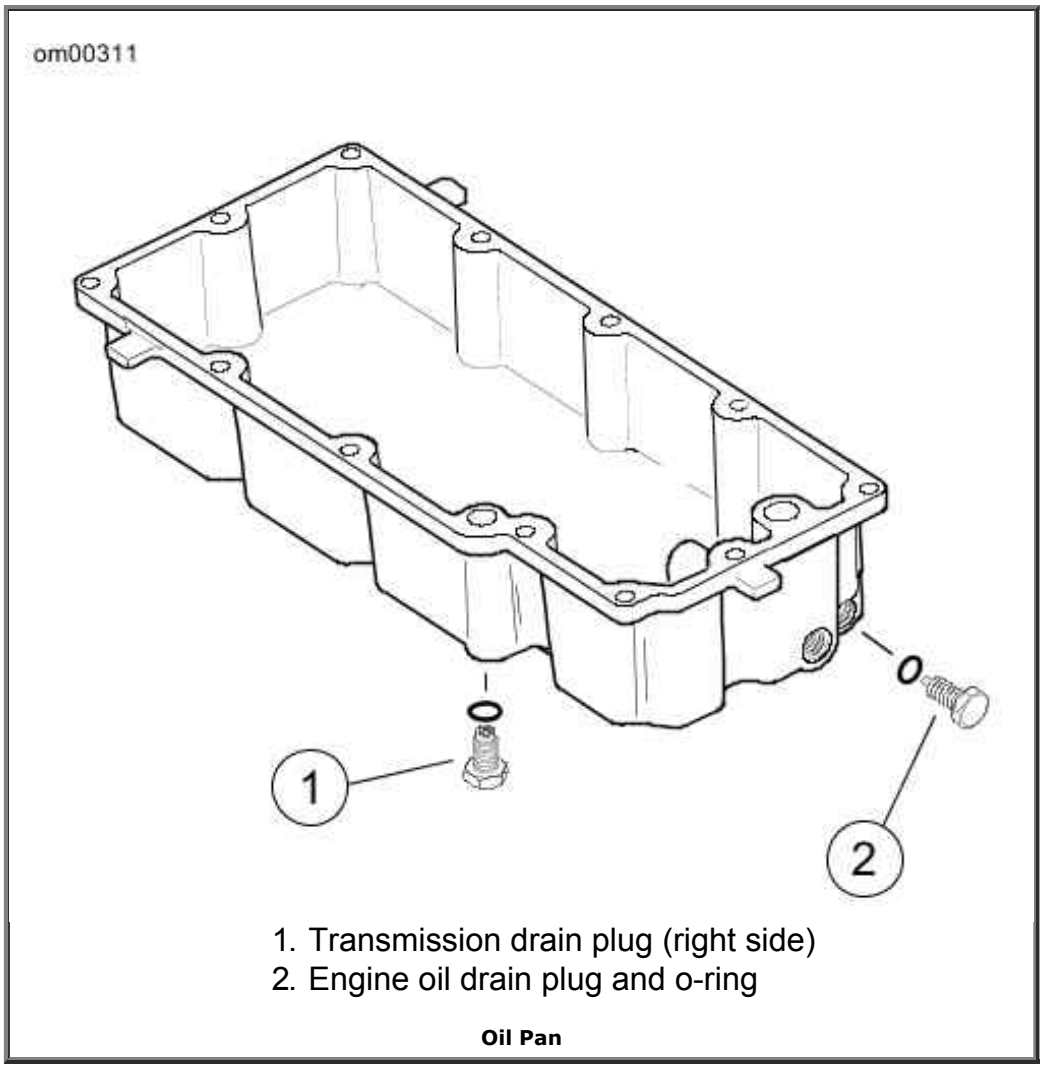


1. Transmission drain plug (right side)
2. Engine oil drain plug and o-ring

**Oil Pan**

4. Inspect the oil drain plug o-ring for cuts, tears or signs of deterioration. Replace as necessary.

**⚠WARNING**

**Be sure that no lubricants or fluids get on tires, wheels or brakes when changing fluid. Traction can be adversely affected, which could result in loss of control of the motorcycle and death or serious injury. (00047d)**

**CAUTION**

**Use Harley-Davidson oil filter wrench for filter removal. This tool can prevent damage to crankshaft position sensor and/or sensor cable. (00192b)**

5. See Oil Pan. Remove the oil filter using the OIL FILTER WRENCH HD-42311 or OIL FILTER WRENCH HD-44067-A . The tool allows easy removal of the oil filter without risk of damage to the crankshaft position sensor or cable.

6. Place the jaws of the wrench over the oil filter with the tool oriented vertically. Using a 3/8 inch drive with a 4 inch extension, turn wrench in a counterclockwise direction. Do not use with air tools.

7. Clean the oil filter mount flange of any old gasket material.

   *NOTE:*

   *Dispose of oil and oil filter in accordance with local regulations.*

8. See Applying Thin Oil Film. Lubricate gasket with clean engine oil and install **new** oil filter on filter mount. Hand tighten oil filter 1/2-3/4 turn after gasket first contacts filter mounting surface. Do **not** use oil filter wrench for filter installation.

   *NOTE:*

   *Use of the Premium 10 micron synthetic media oil filter is highly recommended. Order Chrome (Part No. 63798-99A) or Black (Part No. 63731-99a).*

9. Install engine oil drain plug and tighten to 14-21 ft-lbs (19.0-28.5 Nm).

10. Refer to Recommended Synthetic Engine Oils. With motorcycle resting on jiffy stand, initially add 3.5 U.S. quarts 3.3 liters engine oil. Use the proper grade of oil for the lowest temperature expected before the next oil change.

11. Return the dipstick to the filler and thread-in the filler plug.

12. Verify proper oil level. See Checking Oil Level: FLHTCUSE3.

    a. Check engine oil level using **COLD CHECK** procedure.

    b. Start engine and carefully check for oil leaks around drain plug and oil filter.

    c. Check engine oil level using **HOT CHECK** procedure.

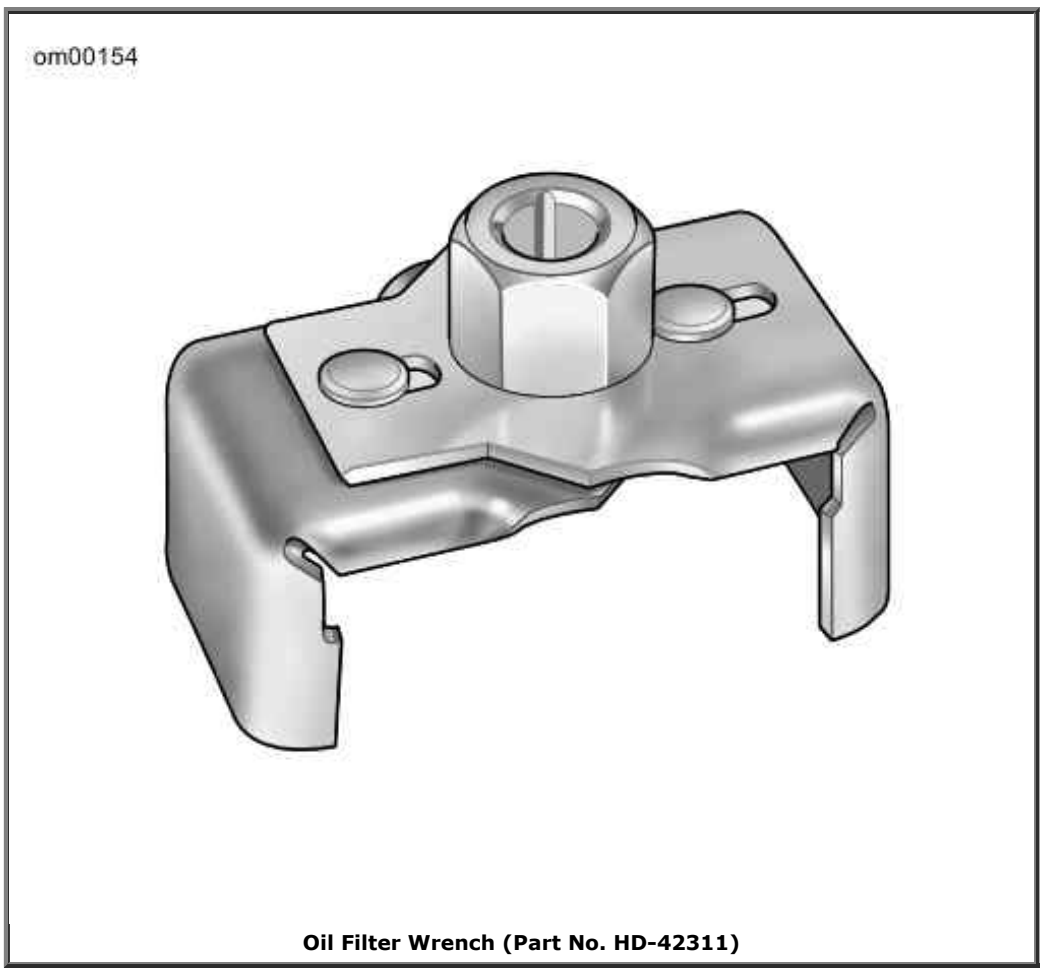


**Oil Filter Wrench (Part No. HD-42311)**

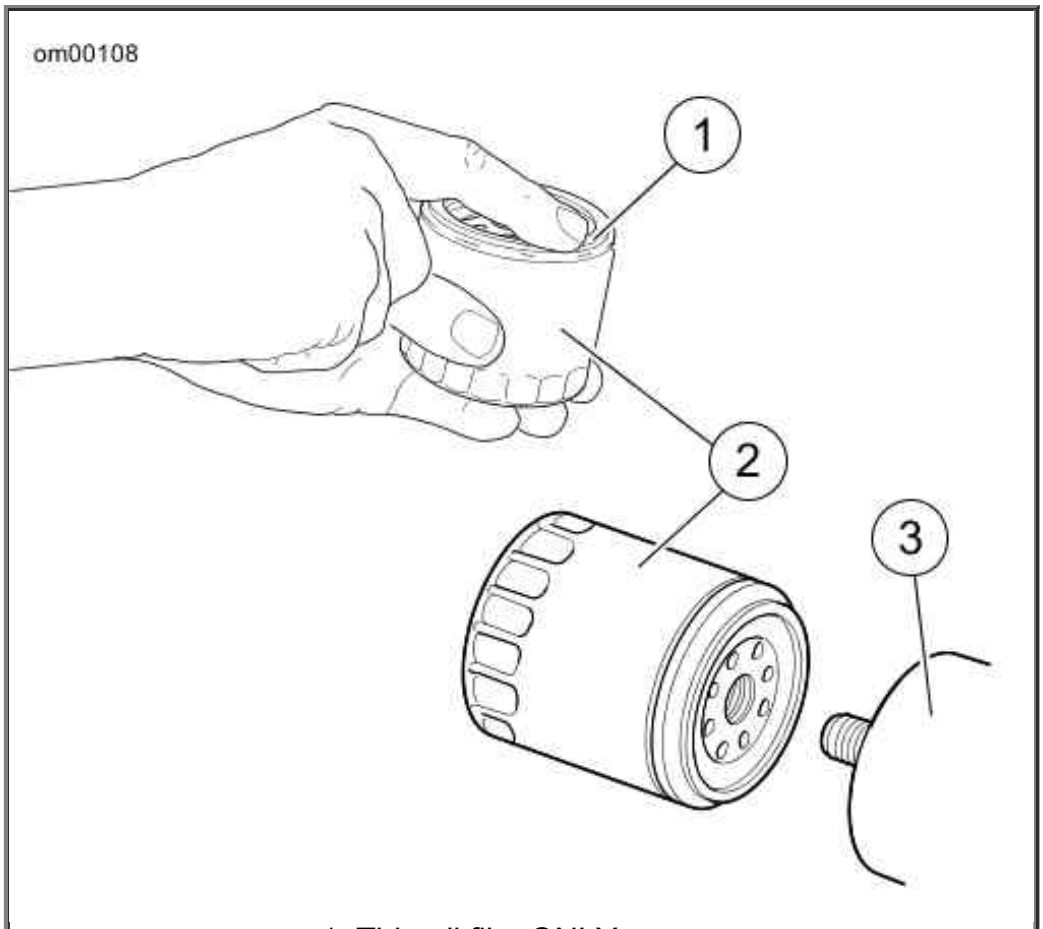


1. Thin oil film ONLY
2. Oil filter
3. Mounting plate

**Applying Thin Oil Film**

## Winter Lubrication

In colder climates, the engine oil should be changed often. If motorcycle is used frequently for short trips, less than 15 miles 24 kilometers , in ambient temperatures below 60° F 16° C , oil change intervals should be reduced to 1500 miles 2400 kilometers . Motorcycles used only for short runs must have a thorough tank flush-out before **new** oil is put in. The tank flush-out should be performed by an authorized dealer or qualified technician.

*NOTE:*

*The further below freezing the temperature drops, the shorter the oil change interval should be.*

Water vapor is a normal by-product of combustion in any engine. During cold weather operation, some of the water vapor condenses to liquid form on the cool metal surfaces inside the engine. In freezing weather this water will become slush or ice and, if allowed to accumulate too long, may block the oil lines and cause damage to the engine.

If the engine is run frequently and allowed to thoroughly warm up, most of this water will become vapor again and will be blown out through the crankcase breather.

If the engine is not run frequently and allowed to thoroughly warm up, this water will accumulate, mix with the engine oil and form a sludge that is harmful to the engine.

## Oil Cooler: FLHTCUSE3

The FLHTCUSE3 is equipped with a factory installed oil cooler. Always keep the cooler clean and free from dirt and debris. This will help maintain maximum cooling efficiency.

**Transmission Lubrication: FLHTCUSE3**

## General

The transmission lubricant level should be checked monthly.

Your motorcycle comes equipped with Screamin' Eagle SYN3 Synthetic Motorcycle Lubricant. For transmission lubrication, it is not recommended to mix SYN3 with other lubricant products.

Refer to Regular Service Intervals: 2008 FLHTCUSE3. The transmission should be drained and refilled with fresh lubricant at specified intervals.

*NOTE:*

*When checking the transmission lubricant level, motorcycle should be leaning on the jiffy stand.*

## Check Lubricant Level

1. Ride motorcycle until engine is warmed up to normal operating temperature.
2. When the engine reaches normal operating temperature, turn the engine off and lean the motorcycle on its sidestand.
3. See Transmission Filler Plug/Dipstick: FLHTCUSE3. Unthread and remove the filler plug/dipstick.
4. See Transmission Filler Plug/Dipstick Lubricant Level. Wipe off filler plug/dipstick and place it back in the filler hole. Do not thread in. (Dipstick should rest on threads of the case.)
5. Remove the plug/dipstick and check the level. The lubricant level should lie between the A (ADD) and F (FULL) marks on the dipstick.

**⚠WARNING**

**Be sure that no lubricants or fluids get on tires, wheels or brakes when changing fluid. Traction can be adversely affected, which could result in loss of control of the motorcycle and death or serious injury. (00047d)**

**CAUTION**

**When draining or adding lubricant, do not allow dirt, debris or other contaminants to enter the engine. (00198a)**

6. If the lubricant level is below the A (ADD) mark, add lubricant. Do not overfill. If the lubricant level is above the F (FULL) mark, leakage may occur. The transmission fluid capacity is approximately 32 fl. oz. 0.946 liters .

a. When filling the transmission, use Screamin' Eagle SYN3 Synthetic Motorcycle Lubricant.

b. If SYN3 is not available and addition of lubricant is required, SYN3 must be completely drained before using other lubricant products. A residual amount of fluid will remain. It is not required to flush out the residual fluid.

7. Inspect o-ring for tears or damage. Replace if required. Wipe any foreign material from plug.

8. Install threaded filler plug/dipstick and tighten clockwise to 25-75 in-lbs (2.8-8.5 Nm).

**Transmission Filler Plug/Dipstick: FLHTCUSE3**

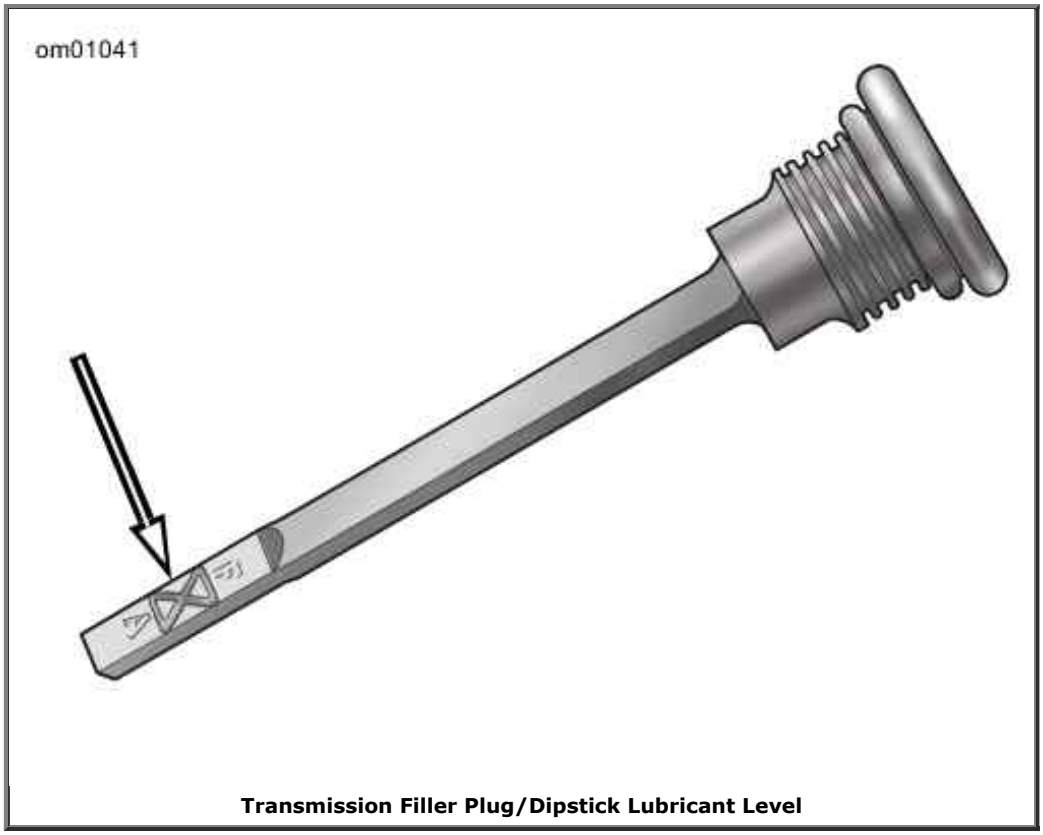


**Transmission Filler Plug/Dipstick Lubricant Level**

## Changing Transmission Fluid

1. See Transmission Filler Plug/Dipstick: FLHTCUSE3. Remove the threaded filler plug/dipstick.

2. See Transmission Filler Plug/Dipstick Lubricant Level. Remove transmission drain plug from the right side of the oil pan and drain lubricant into a suitable container.

**CAUTION**

**When draining or adding lubricant, do not allow dirt, debris or other contaminants to enter the engine. (00198a)**

**⚠WARNING**

**Be sure that no lubricants or fluids get on tires, wheels or brakes when changing fluid. Traction can be adversely affected, which could result in loss of control of the motorcycle and death or serious injury. (00047d)**

*NOTE:*

*Dispose of transmission lubricant in accordance with local regulations.*

3. Inspect o-ring for tears or damage on the drain plug. Replace if required. Wipe any foreign material from plug.

4. Install drain plug and tighten to 14-21 ft-lbs (19.0-28.5 Nm). Fill the transmission with 20-24 fl. oz. 0.59-0.71 liters of Harley-Davidson Screamin' Eagle SYN3 Synthetic Motorcycle Lubricant.

*NOTE:*

*After adding fluid, check the lubrication level. Do not overfill or leakage may occur. The transmission fluid capacity is approximately 32 fl. oz. 0.946 liters .*

5. Install threaded filler/check plug and tighten clockwise to 25-75 in-lbs (2.8-8.5 Nm).
6. Start engine and carefully check for oil leaks around drain plug.

### Primary Chaincase Lubrication: Synthetic Oil

---

Lubrication is a major factor in the performance and service life of the clutch components. Use the appropriate Harley-Davidson chaincase lubricant for all operating temperatures.

Your motorcycle comes equipped with Screamin' Eagle SYN3 Synthetic Motorcycle Lubricant. If SYN3 is not available and addition of lubricant to the primary chaincase is required, the first choice would be to add H-D Primary Chaincase Lubricant. Although H-D Primary Chaincase Lubricant is compatible with SYN3, we suggest the mixture of the fluids be changed as soon as possible.

*NOTE:*

*For model specific information regarding the primary chaincase capacity, refer to the appropriate Service Manual or see a Harley-Davidson dealer.*

### Chaincase Lubricant: Touring Models

---

## General

---

Refer to Regular Service Intervals: 2008 FLHTCUSE3. The chaincase lubricant should be drained and refilled with fresh lubricant at specified intervals.

*NOTE:*

*When checking the chaincase lubricant, motorcycle should be standing STRAIGHT UP, not leaning on the jiffy stand. Keep motorcycle upright for a short period of time to equalize lubricant level in the chaincase compartment.*

## Check Lubricant Level

---

1. Ride motorcycle until engine is warmed up to normal operating temperature.
2. When the engine reaches normal operating temperature, turn the engine off and position motorcycle STRAIGHT UP and LEVEL.
3. See Primary Chaincase Cover. Remove five screws (2) (with captive washers) to free clutch inspection cover (1) from primary chaincase cover.
4. Remove gasket and discard.
5. Pour the proper amount and type of primary chaincase lubricant in through the clutch inspection cover opening, if required.

6. Refer to procedure in Changing Chaincase Lubricant to install gasket and clutch inspection cover.

**CAUTION**

**Do not overfill the primary chaincase with lubricant. Overfilling can cause rough clutch engagement, incomplete disengagement, clutch drag and/or difficulty in finding neutral at engine idle. (00199b)**

*NOTE:*

*Use only GENUINE Harley-Davidson FORMULA+ TRANSMISSION AND PRIMARY CHAINCASE LUBRICANT (Part No. 99851-05 quart).*

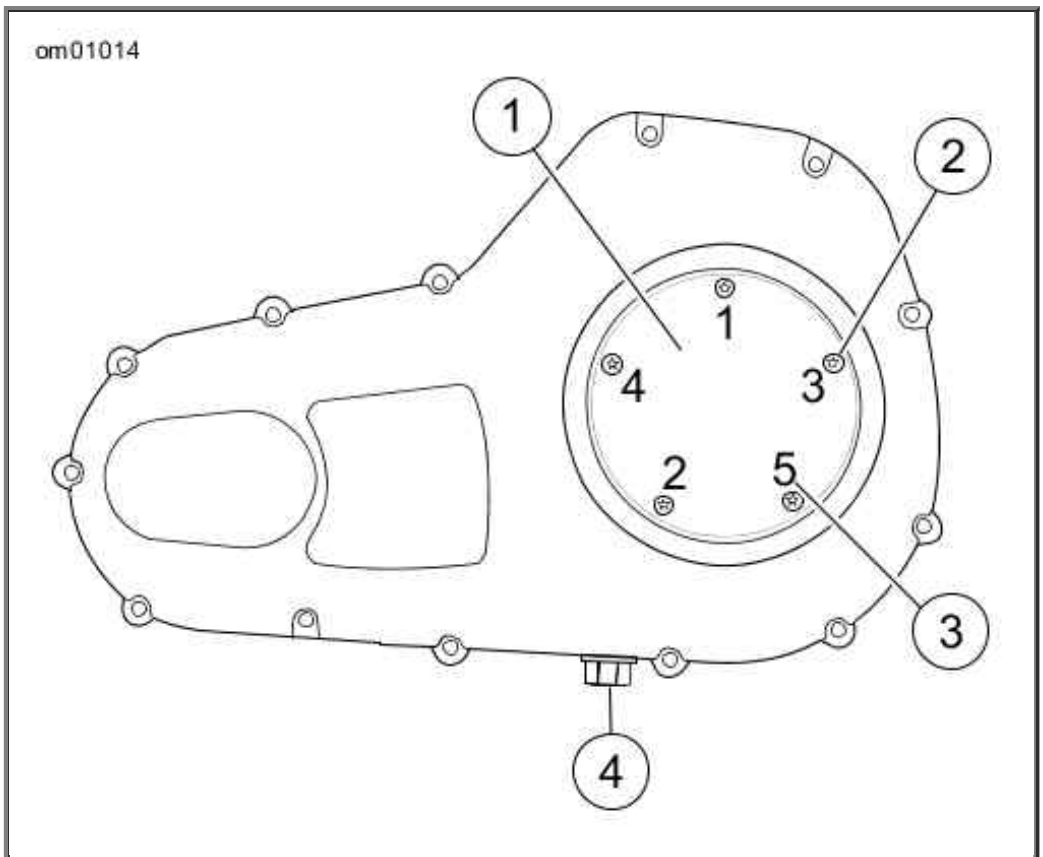


1. Clutch inspection cover
2. Screws with captive washer
3. Clutch cover torque sequence
4. Drain plug

**Primary Chaincase Cover**

## Changing Chaincase Lubricant

**CAUTION**

**When draining or adding lubricant, do not allow dirt, debris or other contaminants to enter the engine. (00198a)**

1. Ride motorcycle until engine is warmed up to normal operating temperature.

2. See Primary Chaincase Cover and Removing Chaincase Drain Plug. Remove magnetic drain plug at bottom of primary chaincase cover. Drain lubricant into suitable container.

   *NOTE:*

   *Dispose of chaincase lubricant in accordance with local regulations.*

3. See Clutch Cover. Remove five screws (with captive washers) to free clutch inspection cover from primary chaincase cover.

4. Clean drain plug. Remove debris from magnet and inspect o-ring for cuts, tears, or signs of deterioration. Replace as necessary. Install drain plug and tighten to 14-21 ft-lbs (19.0-28.5 Nm). If plug has accumulated excess debris, inspect the condition of chaincase components.

5. Pour the appropriate amount of GENUINE Harley-Davidson FORMULA+ TRANSMISSION AND PRIMARY CHAINCASE LUBRICANT (Part No. 99851-05 quart) in through the clutch inspection cover opening. A wet primary change will require 38 fl. oz. 1177 ml . A dry fill after complete disassembly of the primary requires 45 fl. oz. 1330 ml .

**CAUTION**

**Do not overfill the primary chaincase with lubricant. Overfilling can cause rough clutch engagement, incomplete disengagement, clutch drag and/or difficulty in finding neutral at engine idle. (00199b)**

**CAUTION**

**When draining or adding lubricant, do not allow dirt, debris or other contaminants to enter the engine. (00198a)**

**⚠WARNING**

**Be sure that no lubricants or fluids get on tires, wheels or brakes when changing fluid. Traction can be adversely affected, which could result in loss of control of the motorcycle and death or serious injury. (00047d)**

   *NOTE:*

   *Use only GENUINE Harley-Davidson FORMULA+ TRANSMISSION AND PRIMARY CHAINCASE LUBRICANT (Part No. 99851-05 quart).*

6. Install clutch inspection cover and new gasket as follows:

   a. Thoroughly wipe all lubricant from the cover mounting surface and groove in chaincase.

   b. Position gasket in groove in primary chaincase cover and press each of the nubs on gasket into the groove. The nubs will retain the seal in position.

   c. Insert screw (with captive washer) through clutch inspection cover and thread it into

the top cover screw hole.

d. Start the remaining four screws (with captive washers).

e. Tighten screws to 84-108 in-lbs (9.5-12.2 Nm). Follow torque sequence shown in Primary Chaincase Cover.

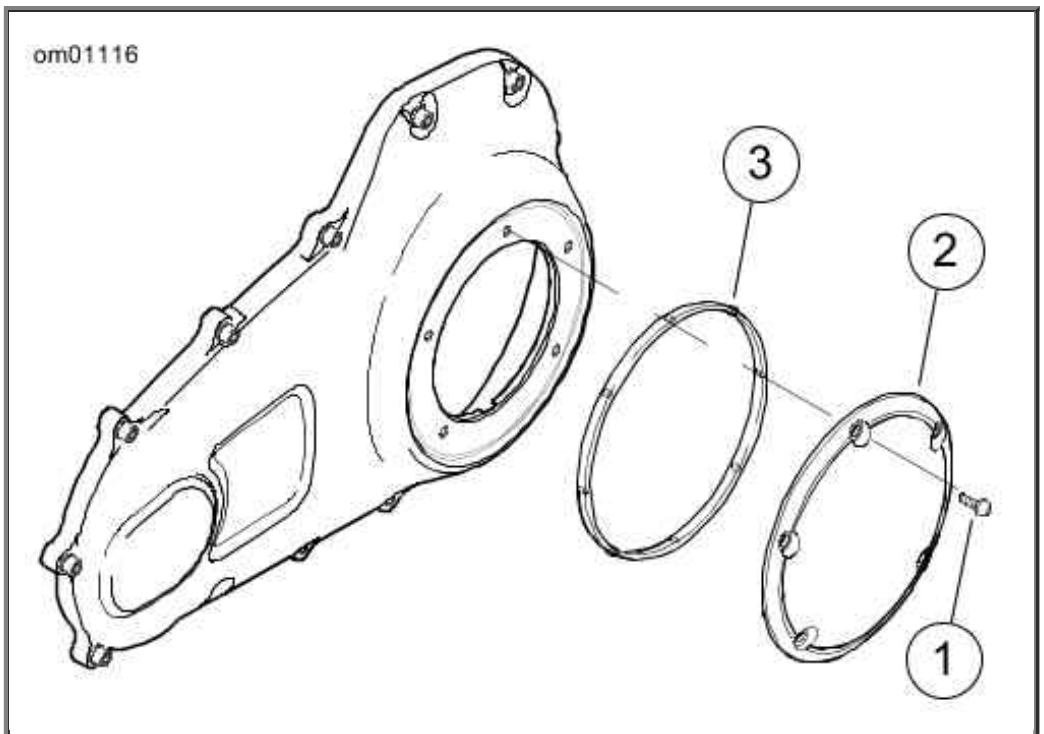


1. TORX screw with captive washer (5)
2. Clutch inspection cover
3. Seal

**Clutch Cover**

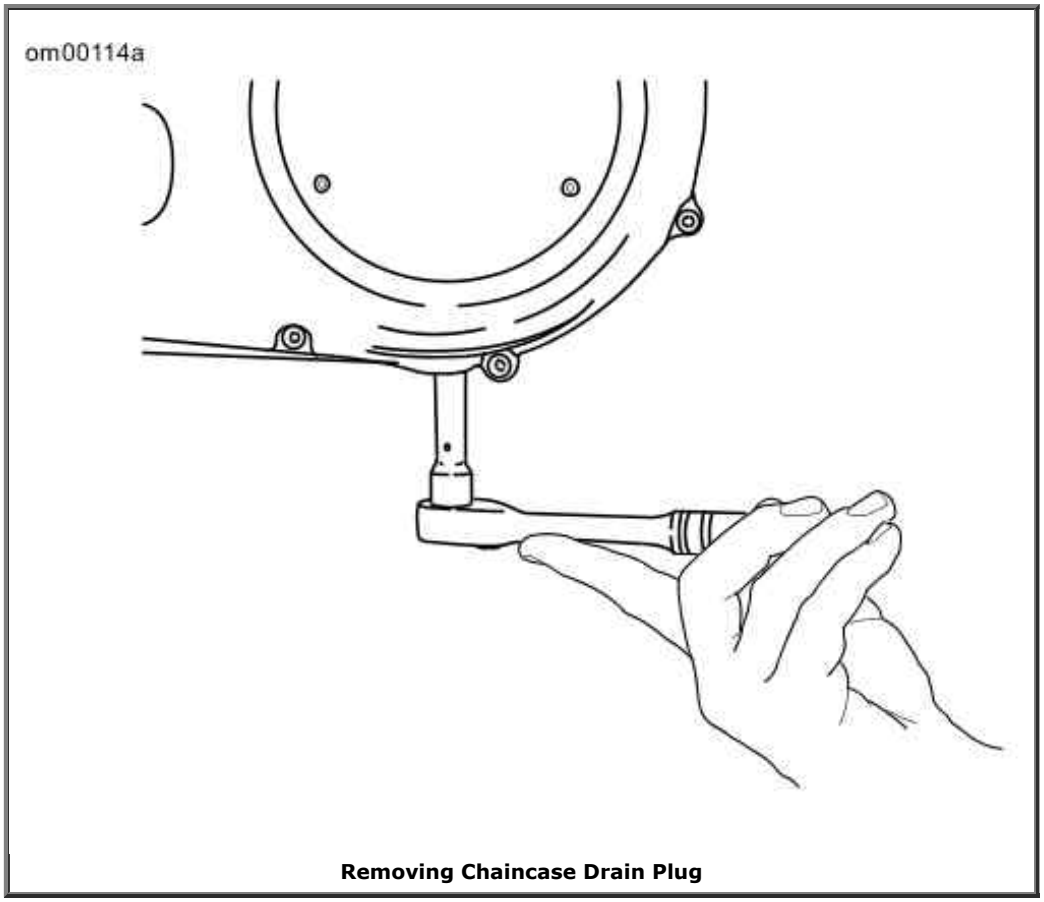


**Removing Chaincase Drain Plug**

## Rear Drive Belt: FLHTCUSE3

The inner tooth surface of the rear drive belt has a thin coating of polyethylene lubricant. During initial operation, this coating will wear off as it is burnished into the belt fabric. This is a normal condition and not an indication of belt wear.

Belt tension is set at the factory and should be checked after the first 1000 miles 1600 kilometers and at regular intervals thereafter.

See Drive Belt Deflection: FLHTCUSE3. With 10 PSI in the rear shocks, the rear wheel on the ground and the motorcycle on its jiffy stand, use the BELT TENSION GAUGE HD-35381-3 to apply 10 lbs. 4.5 kg of force at the loosest spot on the belt. At room temperature with transmission in neutral, belt deflection should be 3/8-7/16 in. 9.6-11.1 mm . If belt tension adjustment is necessary, see a Harley-Davidson dealer or follow the instructions given in the Service Manual.

Check rear brake caliper position on rear brake disc. Disc should run true within brake caliper.

**⚠WARNING**

**Be sure wheel and brake caliper are aligned. Riding with a misaligned wheel or brake caliper can cause the brake disc to bind and lead to loss of control, which could result in death or serious injury. (00050a)**

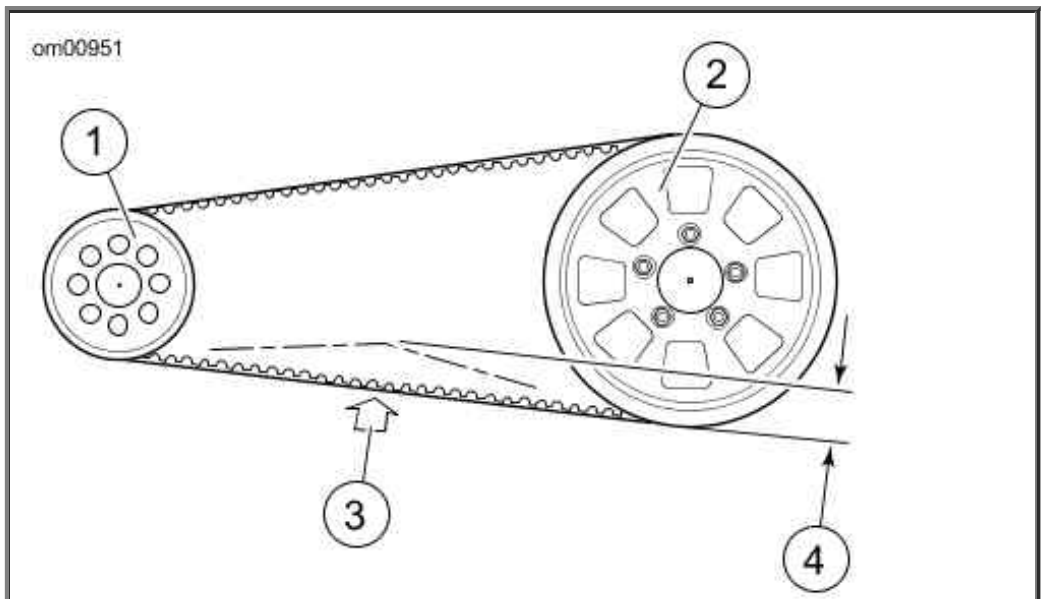


1. Transmission sprocket
2. Rear wheel sprocket
3. Force of 10 lbs (4.5 kg)
4. Belt deflection

**Drive Belt Deflection: FLHTCUSE3**

## Chassis Lubrication

Refer to Regular Service Intervals: 2008 FLHTCUSE3 for all maintenance schedules.

**CAUTION**

**Do not switch lubricant brands indiscriminately because some lubricants interact chemically when mixed. Use of inferior lubricants can damage the engine. (00184a)**

1. Use recommended special purpose grease for steering head bearings. Use a multipurpose chassis grease for other applications.
2. Remove and lubricate handlebar throttle control grip sleeve with fresh graphite at proper intervals.
3. Lubricate throttle control cables and clutch control cable at proper intervals.
4. Lubricate front brake hand lever and clutch control hand lever only if necessary.
5. Inspect rear fork pivot shaft bearings.
6. Pack the steering head bearings with fresh grease at proper intervals.
7. Lubricate the jiffy stand mechanism with LOCTITE AEROSOL ANTI-SEIZE at proper intervals.

*NOTE:*

*For model specific information regarding the chassis lubrication, refer to the appropriate Service Manual or see a Harley-Davidson dealer.*

### Oil Applications

---

Refer to Regular Service Intervals: 2008 FLHTCUSE3 for all control connections and parts. Vehicle should be oiled at regular intervals, particularly after washing motorcycle or driving in wet weather.

### Front Fork Oil

---

Refer to Regular Service Intervals: 2008 FLHTCUSE3. Have a Harley-Davidson dealer drain the front fork oil and refill at proper intervals. If fork does not appear to be working properly or an appreciable amount of oil leakage should develop, see a Harley-Davidson dealer. If there is insufficient oil in either side of fork, the rebound action will be incorrect.

### Fuel Filter

---

## EFI Models Only

---

Fuel injected motorcycles have a fuel filter attached to the fuel pump.

*NOTE:*

*For model specific information regarding fuel filter maintenance, refer to the appropriate Service Manual or see a Harley-Davidson dealer.*

### Hydraulic Clutch: FLHTCUSE3

---

The clutch is hydraulically actuated. Squeezing the left hand lever causes the clutch master cylinder to apply pressure to the clutch actuation cylinder mounted in the trans right side cover. The actuation cylinder push rod extends and contacts the clutch release bearing to release the clutch.

Refer to Regular Service Intervals: 2008 FLHTCUSE3. Check the fluid level as follows:

1. Stand the motorcycle upright (not leaning on the jiffy stand) on a level surface, turn handlebar so the top of the clutch master cylinder is level.

2. Clean all dirt and debris from the clutch master cylinder cover. Remove the two clutch master cylinder cover screws and remove the cover.

3. Verify the fluid level in the clutch master cylinder reservoir is at the FULL LEVEL mark at the top of the ledge on the rear inside wall of the reservoir. If the fluid level is low, add D.O.T. 4 HYDRAULIC BRAKE FLUID (Part No. 99953-99A) approved for clutch system use and available from a Harley-Davidson dealer.

   *NOTE:*

   *Do not overfill the clutch master cylinder reservoir. As the clutch friction discs wear, the piston in the clutch cylinder will force fluid back into the reservoir which could cause fluid overflow.*

**CAUTION**

**D.O.T. 4 hydraulic brake fluid is used in the hydraulic clutch. Do not use other types of fluids as they are not compatible and could cause equipment damage. (00353a)**

**CAUTION**

**Do not allow dirt or debris to enter the master cylinder reservoir. Dirt or debris in the reservoir can cause improper operation and equipment damage. (00205c)**

**⚠CAUTION**

**Direct contact of D.O.T. 4 brake fluid with eyes can cause irritation. Avoid eye contact. In case of eye contact flush with large amounts of water and get medical attention. Swallowing large amounts of D.O.T. 4 brake fluid can cause digestive discomfort. If swallowed, obtain medical attention. Use in well ventilated area. KEEP OUT OF REACH OF CHILDREN. (00240a)**

4. Inspect the clutch master cylinder cover gasket for rips, cuts, cracks, or other signs of damage. Replace the gasket if necessary. Carefully place the cover and cover gasket on the master cylinder reservoir and secure with the two cover screws. Tighten the screws to 6-8 in-lbs (0.68-0.90 Nm).

*NOTE:*

*If the fluid level in the clutch master cylinder reservoir is correct but the clutch does not operate*

*properly, refer to the service manual or see a Harley-Davidson dealer for service.*

## Hydraulic Lifters

The hydraulic lifters are self-adjusting. They automatically adjust length to compensate for engine expansion and valve mechanism wear. This keeps the valve mechanism free of lash when the engine is running.

When starting an engine which has been turned off even for a few minutes, the valve mechanism may be slightly noisy until the hydraulic units completely refill with oil. If at any time the valve mechanism becomes abnormally noisy, other than for a short period immediately after engine is started, it is an indication that one or more of the hydraulic units may not be functioning properly.

Always check the oil supply in the oil tank first since normal circulation of oil through the engine is necessary for proper operation of the hydraulic units.

If there is oil in the tank, the units may not be functioning properly because of dirt in the oil supply passages leading to the lifter units. See a Harley-Davidson dealer for service.

## Front Fork Bearings

**⚠WARNING**

**Adjustments to front fork bearings should be performed by a Harley-Davidson dealer. Improperly adjusted bearings can adversely affect handling and stability, which could result in death or serious injury. (00051a)**

Refer to Regular Service Intervals: 2008 FLHTCUSE3. Check front fork for proper bearing adjustment and lubricate bearings at proper intervals.

With motorcycle front end raised off the floor, be sure front fork turns freely without any binding or interference and that there is no appreciable front to rear fork shake indicating excessive bearing looseness. Steering head bearings should be adjusted according to Service Manual procedure, if necessary.

## Rear Fork Pivot Shaft

Refer to Regular Service Intervals: 2008 FLHTCUSE3. Check the tightness of the rear fork pivot shaft fastener at proper intervals.

*NOTE:*

*For model specific information regarding the rear fork pivot shaft, refer to the appropriate Service Manual or see a Harley-Davidson dealer.*

## Brakes: Touring Models

**⚠WARNING**

**Inspect brake pads for wear at service maintenance intervals. If you ride under adverse conditions (steep hills,**

**heavy traffic, etc.), inspect more frequently. Excessively worn brake pads can lead to brake failure, which could result in death or serious injury. (00052a)**

*NOTES:*

- *Master cylinder cover specifies correct brake fluid.*
- *When adding or changing brake fluid, be sure to use only the type specified for your motorcycle.*
- *Use only Harley-Davidson D.O.T. 4 HYDRAULIC BRAKE FLUID (Part No. 99953-99A).*
- *Do not mix D.O.T. 4 with D.O.T. 5 brake fluid.*

1. Refer to Regular Service Intervals: 2008 FLHTCUSE3. Check brake pads and brake discs for wear at proper intervals.

2. Check the fluid level in the master cylinder reservoirs at proper intervals.

3. If level is low, clean dirt and debris from reservoir cover before removing.

**CAUTION**

**D.O.T. 4 brake fluid will damage painted and body panel surfaces it comes in contact with. Always use caution and protect surfaces from spills whenever brake work is performed. Failure to comply can result in cosmetic damage. (00239b)**

**⚠CAUTION**

**Direct contact of D.O.T. 4 brake fluid with eyes can cause irritation. Avoid eye contact. In case of eye contact flush with large amounts of water and get medical attention. Swallowing large amounts of D.O.T. 4 brake fluid can cause digestive discomfort. If swallowed, obtain medical attention. Use in well ventilated area. KEEP OUT OF REACH OF CHILDREN. (00240a)**

4. Add D.O.T. 4 HYDRAULIC BRAKE FLUID (Part No. 99953-99A) if necessary.

*NOTE:*

*Use only D.O.T. 4 HYDRAULIC BRAKE FLUID (Part No. 99953-99A) approved for brake system use and available from your Harley-Davidson dealer.*

Harley-Davidson has provided your new motorcycle with the optimum brake pad friction material available. It is selected to give the best performance possible under dry, wet and high operating temperature conditions. It exceeds all regulatory requirements currently in effect. However, during some braking conditions you may experience noise. This is normal for this friction material.

**⚠WARNING**

**Brakes are a critical safety component. Contact a Harley-Davidson dealer for brake repair or replacement. Improperly serviced brakes can adversely affect brake**

**performance, which could result in death or serious injury. (00054a)**

See Brake Friction Material. Visual inspection of brake pads can be made without removing the caliper. View the lower area of each caliper with a flashlight.

**⚠WARNING**

**Perform routine scheduled brake maintenance. Lack of maintenance at recommended intervals can adversely affect brake performance, which could result in death or serious injury. (00055a)**

**⚠WARNING**

**Always replace brake pads in complete sets for correct and safe brake operation. Improper brake operation could result in death or serious injury. (00111a)**

The rear brake outer pad on all models can be measured from the caliper bracket side using a thin plastic 6.0 in. 152.4 mm rule. Place the rule against the brake disc through the space alongside the caliper.

The outer surface of the brake pad backing plate should measure 0.016 in. 0.4 mm or more away from the brake disc.

*NOTES:*

- *If the brake pad friction material is 0.016 in. 0.4 mm thick or less, the pads must be replaced immediately.*
- *Always replace brake pads in pairs.*

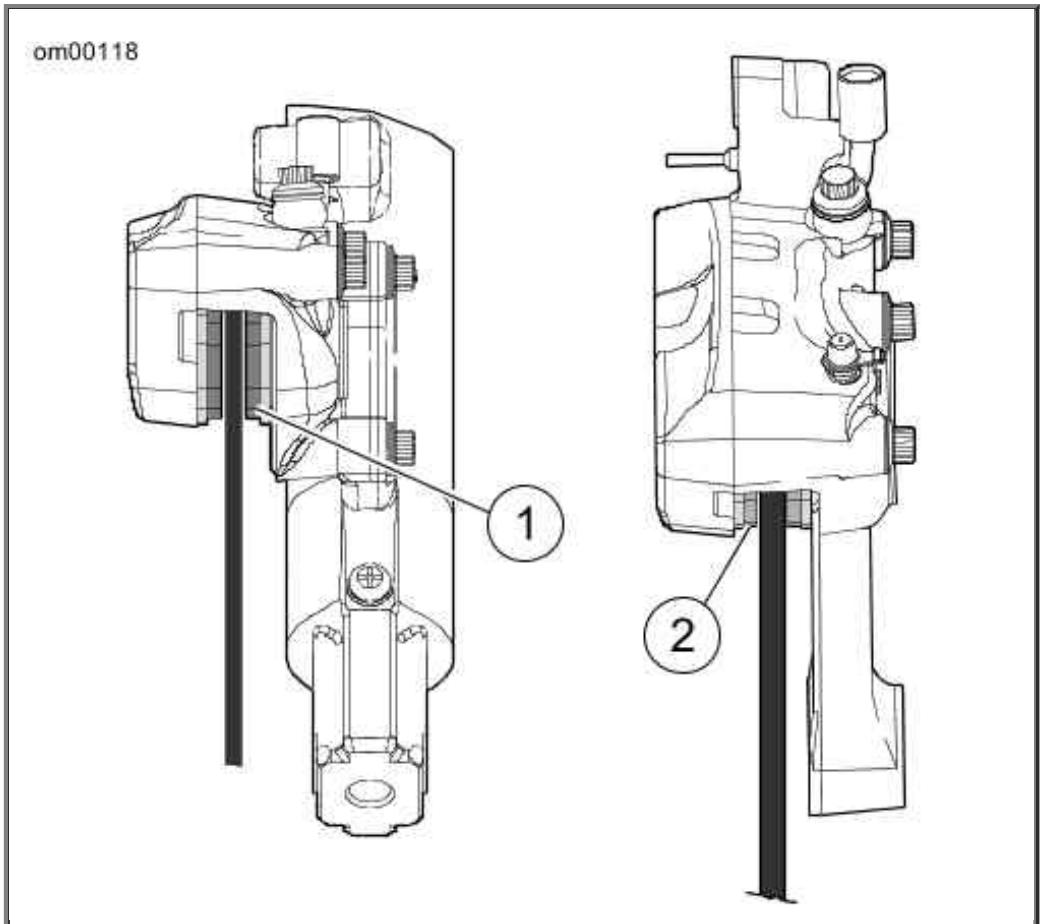


1. Front brake bottom view
2. Rear brake top view

**Brake Friction Material**

## Tires

See Specifications: 2008 FLHTCUSE3 for tire pressures and sizes.

- Be sure to keep tires properly inflated.
- Follow tire data for correct cold tire inflation pressures.
- Check before riding when tires are cold.
- Do not over-inflate tires.

**⚠WARNING**

**Do not inflate tire beyond maximum pressure as specified on sidewall. Over inflated tires can blow out, which could result in death or serious injury. (00027a)**

**⚠WARNING**

**Match tires, tubes, air valves and caps to the correct wheel rim. Contact a Harley-Davidson dealer. Mismatching can result in damage to the tire bead, allow tire slippage on the rim or cause tire failure, which could result in death or serious injury. (00023a)**

Check inflation pressure and inspect tread for punctures, cuts, breaks, etc., at least weekly if in

daily use. Check before each trip if used occasionally.

**⚠WARNING**

**Be sure tires are properly inflated, balanced and have adequate tread. Inspect your tires regularly and see a Harley-Davidson dealer for replacements. Riding with excessively worn, unbalanced or under-inflated tires can adversely affect stability and handling, which could result in death or serious injury. (00014a)**

Same as original equipment tires should be used. Other tires may not fit correctly, could adversely affect handling, and may be hazardous to use.

**⚠WARNING**

**Tires are a critical safety component. Contact a Harley-Davidson dealer for tire repair or replacement. Improper tire service can adversely affect stability and handling, which could result in death or serious injury. (00057a)**

**⚠WARNING**

**Replace punctured or damaged tires. In some cases, small punctures in the tread area may be repaired from within the demounted tire by a Harley-Davidson dealer. Speed should NOT exceed 50 mph (80 km/h) for the first 24 hours after repair, and the repaired tire should NEVER be used over 80 mph (130 km/h). Failure to follow this warning could result in death or serious injury. (00015a)**

**⚠WARNING**

**Striking an object, such as a curb, can cause internal tire damage. If an object is struck, remove and inspect both the inside and outside of the tire. A damaged tire can adversely affect stability and handling, which could result in death or serious injury. (00058a)**

### Tire Replacement

---

## Inspection

---

**⚠WARNING**

**Harley-Davidson tires are equipped with wear bars that run horizontally across the tread. When wear bars become visible and only 1/32 in. (0.8 mm) tread depth remains, replace tire immediately. Using a worn tire can adversely**

**affect stability and handling, which could result in death or serious injury. Use only Harley-Davidson approved replacement tires. (00090b)**

See Tire Sidewall Wear Bar Locator. Arrows on tire sidewalls pinpoint location of wear bar indicators.

Tread wear indicator bars will appear on tire tread surfaces when 1/32 in. 0.8 mm or less of tire tread remains. See Wear Bar Appearance. Always replace tires before the tread wear indicator bars appear.

## When To Replace Tires

---

New tires are needed if any of the following conditions exist:

1. Tread wear indicator bars become visible on the tread surfaces.
2. Tire cords or fabric become visible through cracked sidewalls, snags or deep cuts.
3. A bump, bulge or split in the tire.
4. Puncture, cut or other damage to the tire that cannot be repaired.

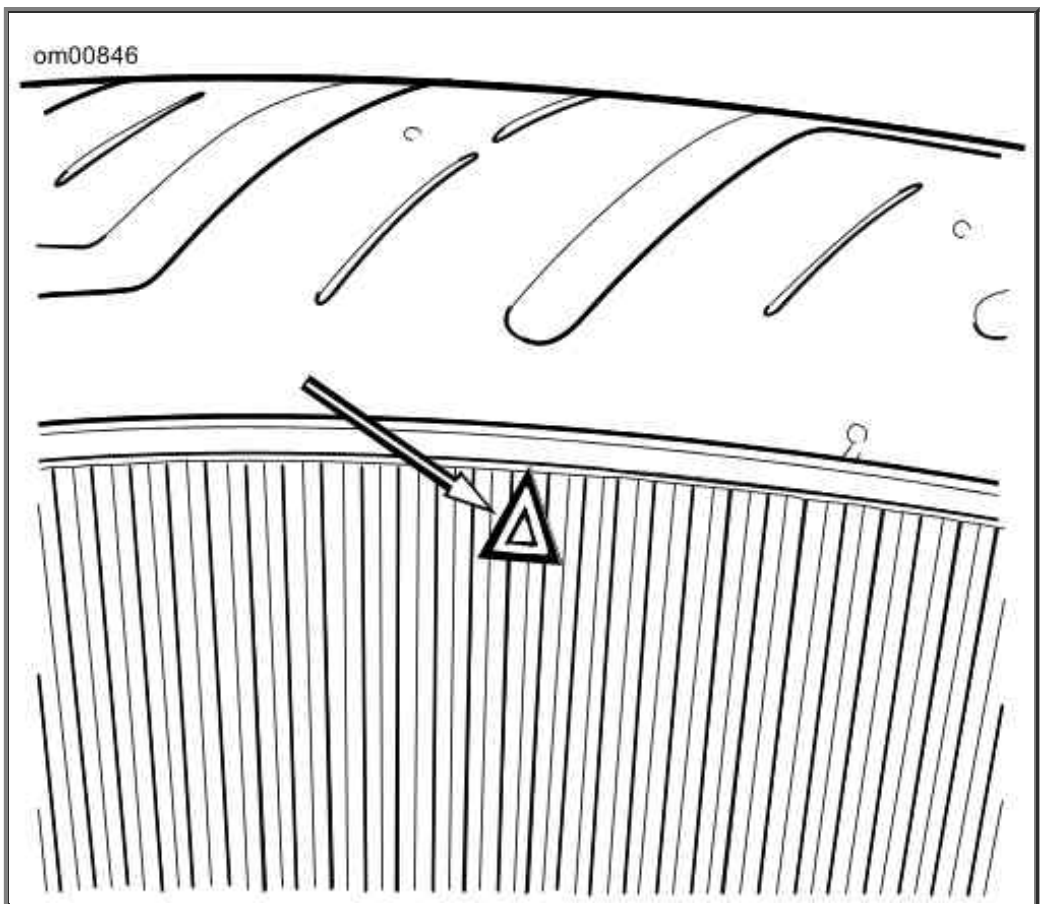


**Tire Sidewall Wear Bar Locator**

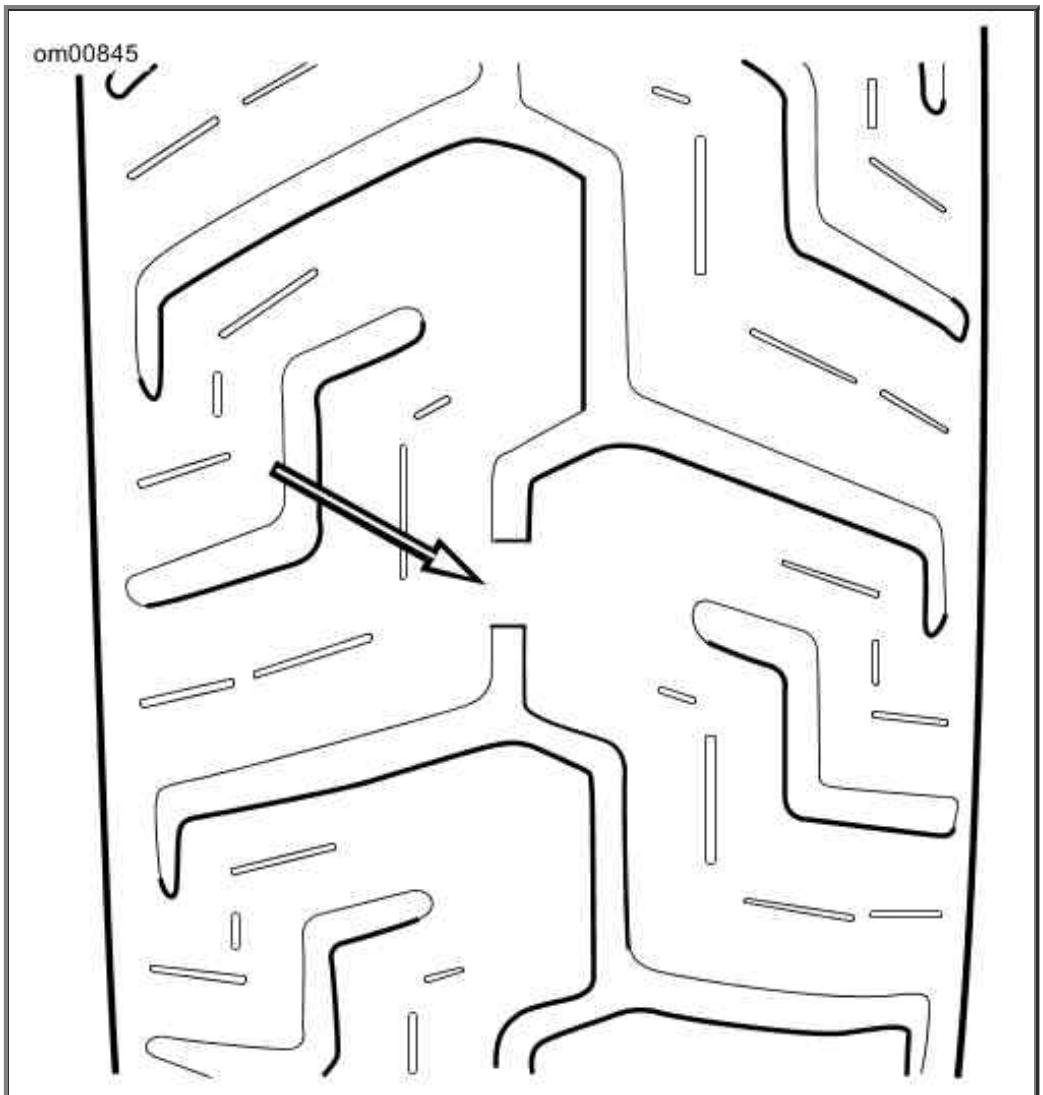


Wear Bar Appearance

### Vehicle Alignment

## Isolation Mounted Engine Models

Refer to Regular Service Intervals: 2008 FLHTCUSE3. Vehicle alignment should be checked at regular intervals. This includes whenever the rear wheel is removed and installed or when the rear drive belt is adjusted. The stabilizer links and engine mounts should be checked for wear according to Service Manual procedures at proper intervals.

Vehicle alignment is important. Vehicle stability is adversely affected if wheels are out of alignment. Major alignment of the front and rear wheel is partially controlled by one stabilizer link at the top of the engine. See a Harley-Davidson dealer for this service.

**⚠WARNING**

**Do not change stabilizer link adjustment. Changing adjustment can adversely affect stability, which could result in death or serious injury. (00059a)**

**⚠WARNING**

**Only a Harley-Davidson dealer should perform vehicle alignment. Improper alignment can adversely affect stability and handling, which could result in death or serious injury. (00060a)**

## Shock Absorbers

Refer to Regular Service Intervals: 2008 FLHTCUSE3. Inspect shock absorbers and rubber bushings for leaks and bushing deterioration at proper intervals.

## Spark Plugs

Refer to Regular Service Intervals: 2008 FLHTCUSE3. Check the spark plugs at proper intervals.

**⚠CAUTION**

**Do NOT pull on any electrical wires. Pulling on electrical wires may damage the internal conductor causing high resistance, which may result in minor or moderate injury. (00168a)**

Disconnect spark plug cables from plugs by pulling on the molded connector caps. To reconnect, simply snap-on spark plug cables to tops of spark plugs.

Refer to Ignition System: 2008 FLHTCUSE3 before servicing spark plugs.

1. Check spark plug type. Only use those spark plugs specified for your model motorcycle.
2. Check spark plug gap against table specifications.
3. Always tighten to the proper torque. Spark plugs must be tightened to the torque specified for proper heat transfer.

*NOTE:*

*If a torque wrench is not available, tighten plugs finger tight and then tighten an additional one quarter turn with a spark plug wrench.*

## Ignition

The engine in your motorcycle has been designed specifically to achieve optimum fuel economy within exhaust emission controls. Factory programmed ignition characteristics provide maximum engine performance and driveability.

## Air Cleaner

See Air Cleaner. The engine air cleaner is a paper/wire mesh air filter element.

Refer to Regular Service Intervals: 2008 FLHTCUSE3. Remove air cleaner cover and inspect filter element at proper intervals. Under dusty conditions, inspect more often.

The paper/wire mesh air filter element should be washed in luke warm water with a mild detergent.

**⚠WARNING**

**Compressed air can pierce the skin and flying debris from compressed air could cause serious eye injury. Wear safety glasses when working with compressed air. Never use your hand to check for air leaks or to determine air flow rates. (00061a)**

- Allow filter to either air dry or blow it dry, from the inside, with low pressure air.
- Do not use an air cleaner filter oil on the Harley-Davidson paper/wire mesh air filter element.

**CAUTION**

**Install air filter before running engine. Failure to do so can draw debris into the engine and could result in engine damage. (00207a)**

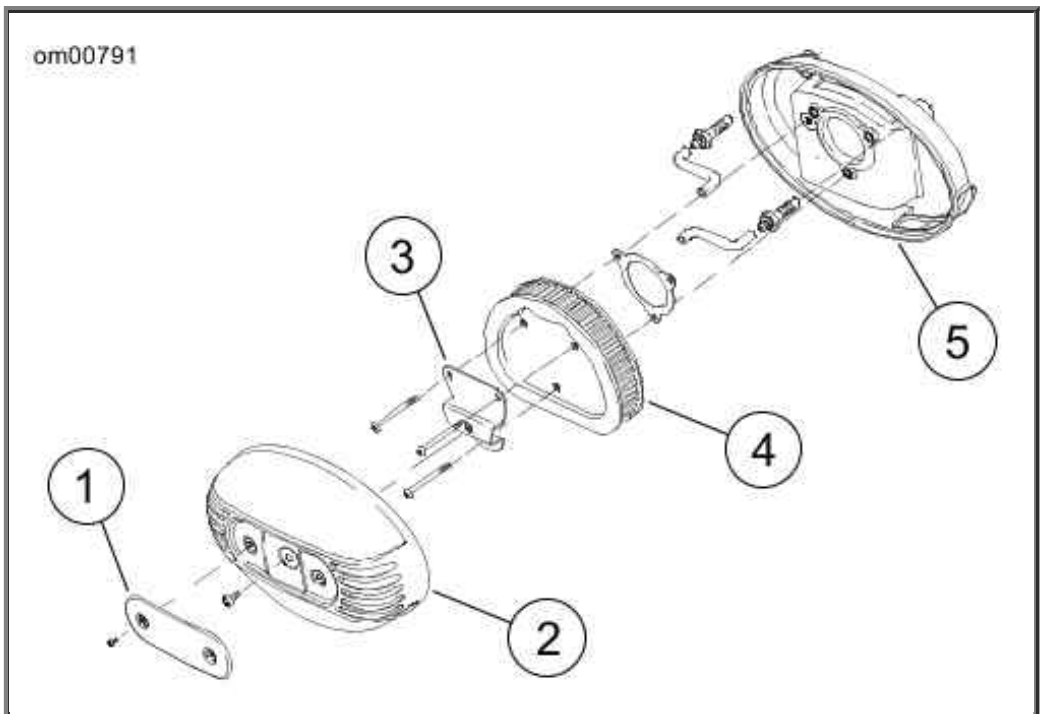


1. Cosmetic plate
2. Cover
3. Bracket
4. Air filter
5. Backing plate

**Air Cleaner**

## Headlamps: FLHTCUSE3

The headlamp assembly uses a separate replaceable quartz halogen bulb for the low beam and the high beam. Refer to Bulb Chart: 2008 FLHTCUSE3 and see a service manual for more details.

To replace the bulbs:

1. See Headlamp Door: FLHTCUSE3. Remove the small fastener and the headlamp door.
2. See Headlamp Retaining Ring: FLHTCUSE3. Remove the 3 screws and the reflector/lens retaining ring (1).
3. Support the reflector/lens and remove the wire harness connectors from the bulb connectors.
4. Quarter turn the connector to remove a bulb from the reflector/lens.
5. Quarter turn a new bulb to lock the bulb in the reflector/lens and mate the wiring harness connectors to the bulb connectors.
6. Set the reflector/lens up to the adjustment ring matching the square tabs to the square recesses in the ring.
7. Align the three taps on the retaining ring with the threaded holes on the adjustment ring and tighten to hold the reflector/lens in place.
8. Replace the headlamp door and tighten the fastener.

*NOTE:*

*Refer to Headlamp Alignment: FLHTCUSE3 if the headlamp beam requires adjustment.*

**CAUTION**

**When replacement is required, use only the specified sealed beam unit or bulb, available from a Harley-Davidson dealer. An improper wattage sealed beam or bulb, can cause charging system problems. (00209a)**

**CAUTION**

**Never touch the quartz bulb. Fingerprints will etch the glass and decrease bulb life. Grab the bulb with paper or a clean, dry cloth. Failure to do so could result in bulb damage. (00210a)**

**⚠WARNING**

**Handle bulb carefully and wear eye protection. Bulb contains gas under pressure, which, if not handled carefully, could cause serious eye injury. (00062b)**

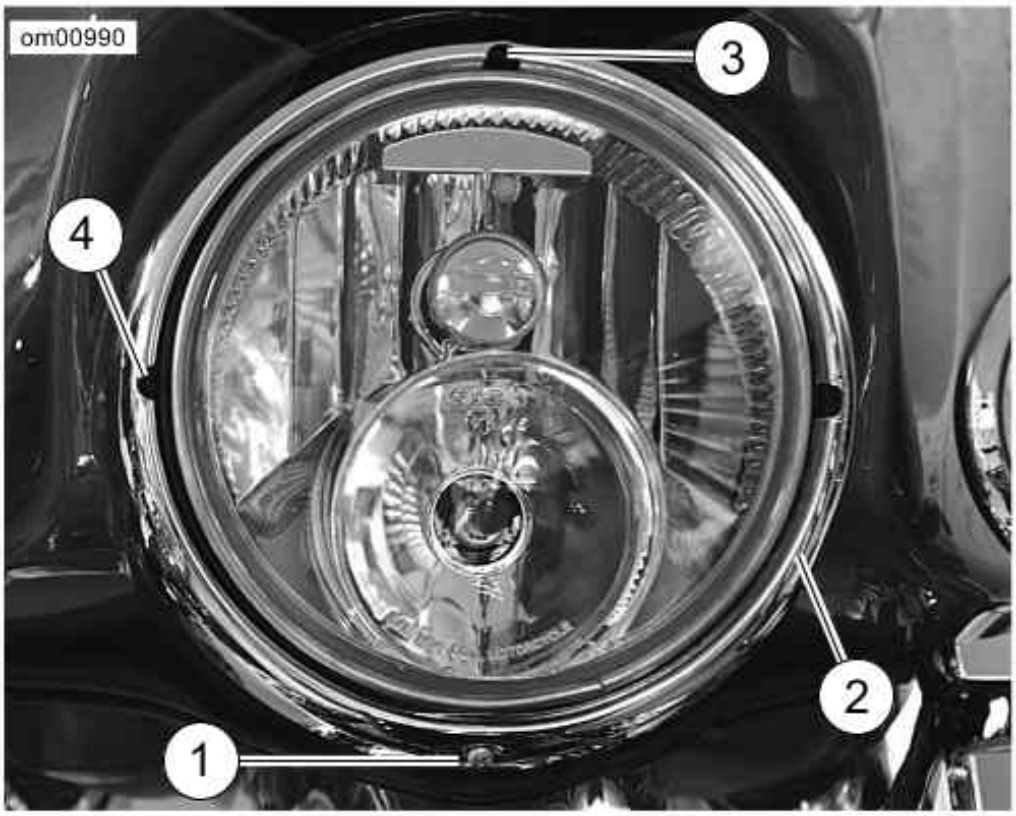


1. Fastener
2. Headlamp door (chrome ring)
3. Vertical adjustment
4. Horizontal adjustment

**Headlamp Door: FLHTCUSE3**

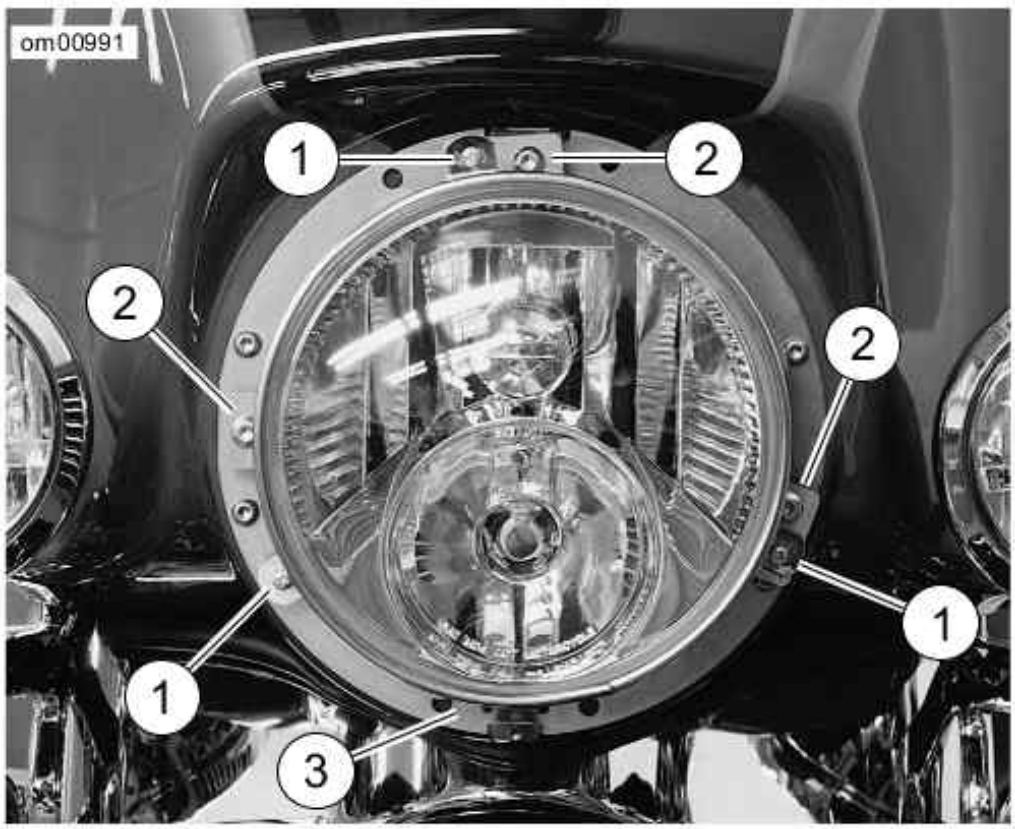


1. Retaining ring fastener
2. Headlamp adjusting screw
3. Headlamp door fastener threads

**Headlamp Retaining Ring: FLHTCUSE3**

## Check Alignment

**⚠WARNING**

**The automatic-on headlamp feature provides increased visibility of the rider to other motorists. Be sure headlamp is on at all times. Poor visibility of rider to other motorists can result in death or serious injury. (00030b)**

1. Verify correct front and rear tire inflation pressure. Refer to Tire Pressures: 2008 FLHTCUSE3.
2. Place the motorcycle on a level floor or pavement in an area with minimum light.
3. See Check Headlamp Alignment: FLHTCUSE3. Point the front of the motorcycle toward a screen or wall which is 25 feet 7.6 meters from where patch of front tire contacts floor (i.e. - directly below front axle).
4. Draw a horizontal line on screen or wall (1) that is exactly the same height above the floor as the headlamp center.
5. Have a person whose weight is roughly the same as that of the principal rider sit on the motorcycle seat. The weight of the rider will compress the vehicle suspension slightly.
6. Stand the motorcycle upright with both tires resting on the floor and with the front wheel held in straight alignment (directly forward).
7. Turn the ignition/headlamp key switch to IGNITION. Rock the headlamp dimmer switch on the left handlebar to HI (high) beam.
8. Verify and correct headlamp adjustment if necessary.
    a. Check the light beam for proper height alignment. The center of the main beam of light should be even with the horizontal line on the screen or wall.
    b. Check the light beam for proper lateral alignment. The main beam of light should be directed straight ahead (i.e., equal area of light to right and left of center).

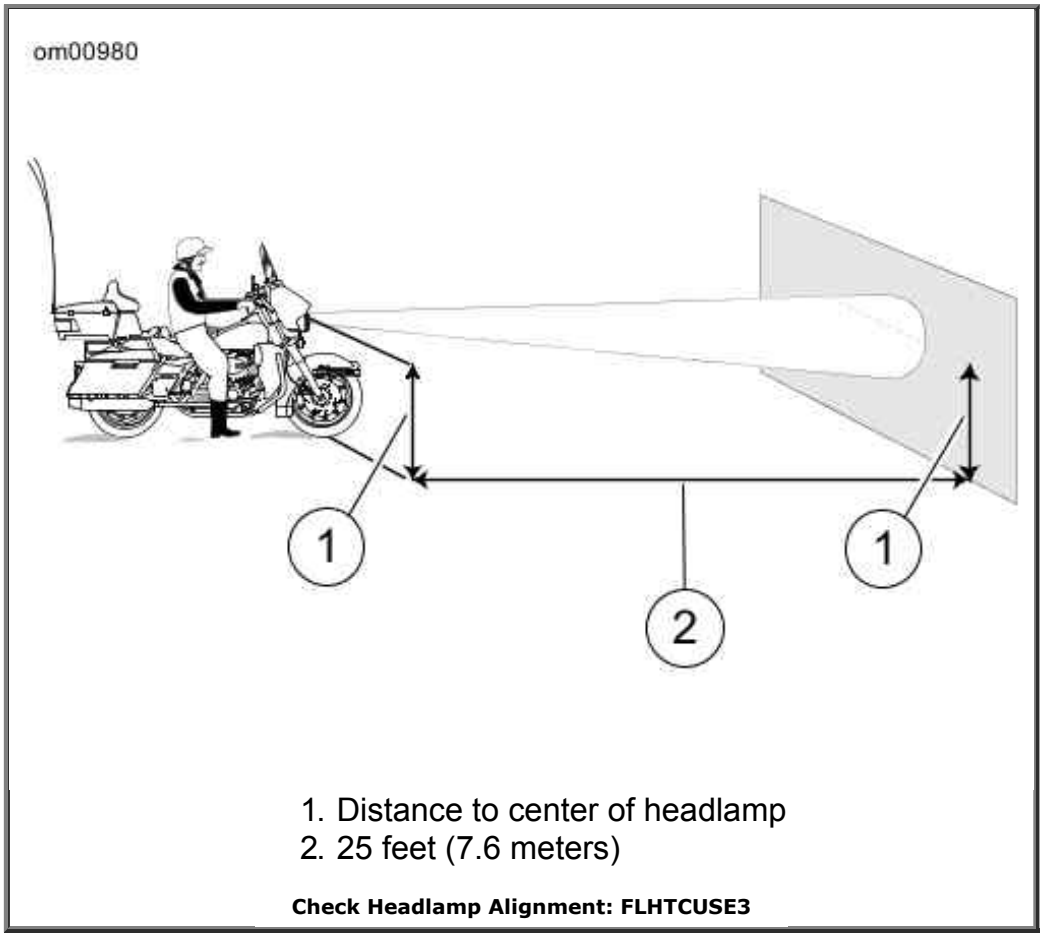


1. Distance to center of headlamp
2. 25 feet (7.6 meters)

**Check Headlamp Alignment: FLHTCUSE3**

## Adjust Headlamp

*NOTE:*

*Headlamp adjustment can be performed without removing the headlamp door (chrome ring).*

1. Insert Phillips screwdriver between headlamp housing and rubber gasket.
2. See Headlamp Door: FLHTCUSE3. Adjust beam.
   a. Turn the vertical adjusting screw (3) to adjust headlamp vertically.
   b. Turn the horizontal adjusting screw (4) to adjust headlamp horizontally.

### Turn Signal Bulb Replacement: Bullet Style

1. See Lens Cap Notch. Insert a coin or the blade of a small screwdriver into the notch at the bottom of the lens cap. Carefully twist until the lens cap pops out of the lamp housing.
2. Push in bulb and rotate counterclockwise. Pull bulb from socket.
3. Inspect condition of electrical contacts in socket. If necessary, clean with a small wire brush and electrical contact cleaner.
4. Coat base of **new** bulb with ELECTRICAL CONTACT GREASE 99861-90 .
5. Orient index pins on **new** bulb with pin guides inside bulb socket. Push bulb in and turn clockwise to lock in place.

6. Snap lens cap back into the lamp holder. Rotate lens to position notch at bottom of lamp.

**⚠WARNING**

**Be sure that all lights and switches operate properly before operating motorcycle. Low visibility of rider can result in death or serious injury. (00316a)**

7. Turn ignition on and test for proper turn signal operation.

*NOTE:*

*If the turn signal or running lamp will not light after replacing a bulb, check the wiring, the ground at the socket and/or the switch.*

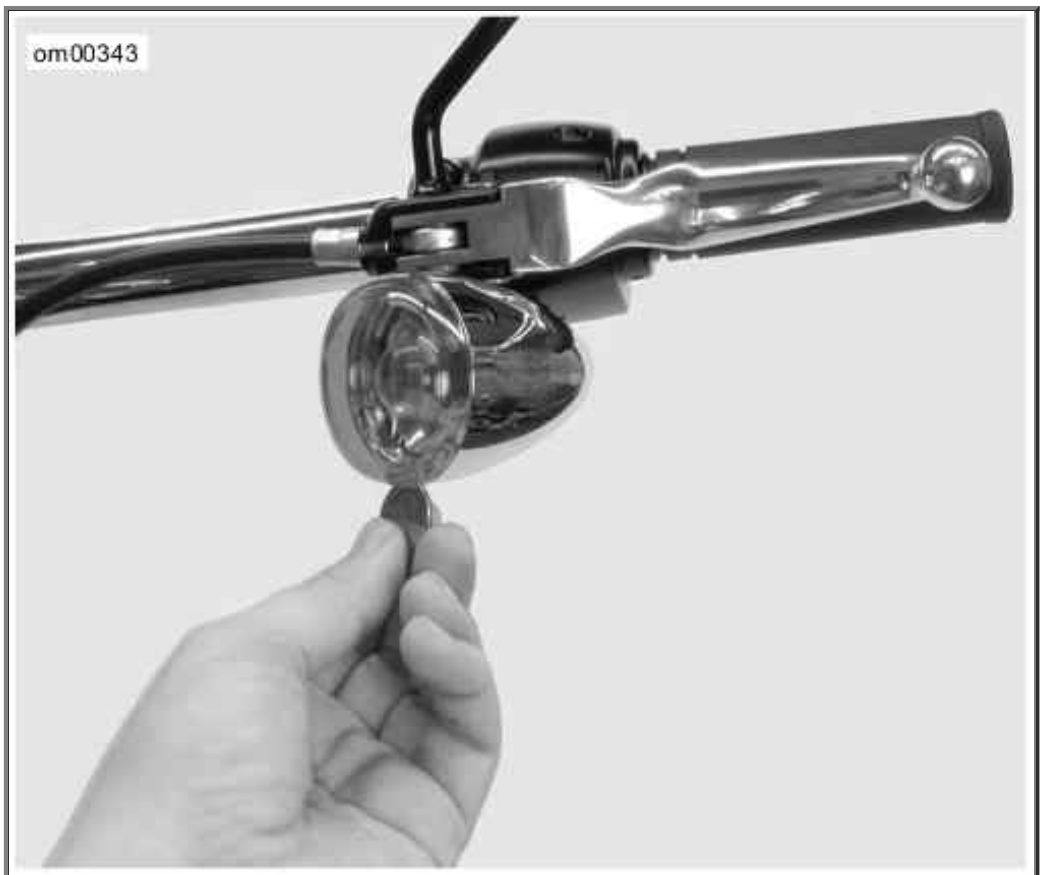


**Lens Cap Notch**

## Tail Lamp Bulb Replacement: Standard Style

1. See Tail Lamp Assembly: Standard Style. Make certain ignition switch is turned off.
2. Remove two screws and lens from base.

   *NOTE:*

   *For ease of bulb removal, the 4-Pin multilock connector can be removed from circuit board.*

3. Remove (pull) bulb assembly from lens. Remove bulb from socket.
4. Coat base of **new** bulb with ELECTRICAL CONTACT GREASE (Part No. 99861-90). Install **new** bulb in socket.

5. Install (push) bulb assembly to lens.
6. If removed connect 4-Pin multilock connector to circuit board.
7. Install lens to base with two screws. Tighten screws to 20-24 in-lbs (2.3-2.7 Nm).

**⚠WARNING**

**Be sure that all lights and switches operate properly before operating motorcycle. Low visibility of rider can result in death or serious injury. (00316a)**

8. Turn ignition on and test for proper tail lamp operation.

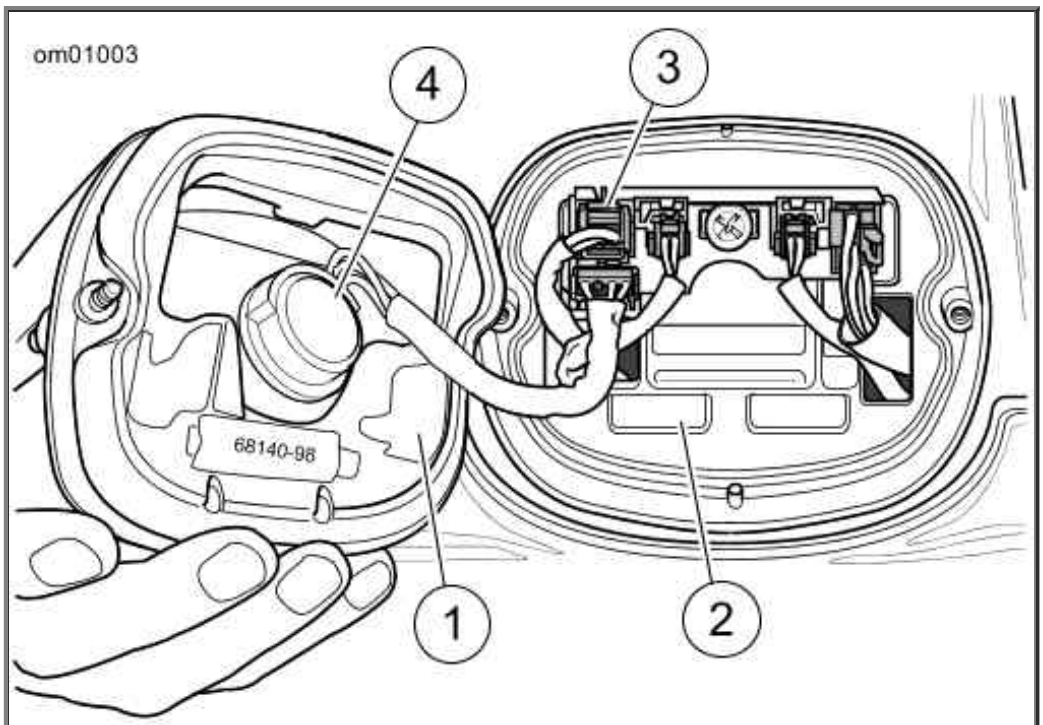


1. Lens
2. Base
3. 4-pin multilock connector
4. Bulb assembly

**Tail Lamp Assembly: Standard Style**

### Alternator/Voltage Regulator

## Charging Rate

The alternator output is controlled and changed to direct current by the voltage regulator.

- The voltage regulator increases charging rate when battery is low or lamps are lit.
- The voltage regulator decreases charging rate when battery charge is up.

**CAUTION**

**It is possible to overload your motorcycle's charging**

**system by adding too many electrical accessories. If your combined electrical accessories operating at any one time consume more electrical current than your vehicle's charging system can produce, the electrical consumption can discharge the battery and cause vehicle electrical system damage. See a Harley-Davidson dealer for advice about the amount of current consumed by additional electrical accessories, or for necessary wiring changes. (00211b)**

A battery voltage LED in the instruments will light up when voltage is either too low or too high.

*NOTES:*

- *This unit requires no interval attention. If any electrical system trouble is experienced that might be traceable to the alternator or voltage regulator, the motorcycle should be taken to a Harley-Davidson dealer who has the necessary electrical testing equipment to give the required attention.*
- *For model specific information regarding the voltage regulator, refer to the appropriate Service Manual or see a Harley-Davidson dealer.*

### Battery: General

---

## Type

---

Your motorcycle uses a permanently sealed, maintenance-free, lead/calcium and sulfuric acid battery. All batteries are shipped precharged and ready to be put into service. Do not attempt to open the battery for any reason.

**Antidotes for Battery Acid**

| CONTACT | TREATMENT |
|---|---|
| External | Flush with water. |
| Internal | Drink large quantities of milk or water, followed by milk of magnesia, vegetable oil or beaten eggs. Get immediate medical attention. |
| Eyes | Flush with water. Get immediate medical attention. |

**⚠WARNING**

**Batteries contain sulfuric acid, which could cause severe burns to eyes and skin. Wear a protective face shield, rubberized gloves and protective clothing when working with batteries. KEEP BATTERIES AWAY FROM CHILDREN. (00063a)**

**⚠WARNING**

**Explosive hydrogen gas, which escapes during charging, could cause death or serious injury. Charge battery in a well-ventilated area. Keep open flames, electrical sparks and smoking materials away from battery at all times. KEEP BATTERIES AWAY FROM CHILDREN. (00065a)**

**⚠WARNING**

**Batteries, battery posts, terminals and related accessories contain lead and lead compounds, and other chemicals known to the State of California to cause cancer, and birth defects or other reproductive harm. Wash hands after handling. (00019e)**

**⚠WARNING**

**Never remove warning label attached to top of battery. Failure to read and understand all precautions contained in warning, could result in death or serious injury. (00064a)**

1. Contents are corrosive
2. Wear safety glasses
3. Contents are explosive
4. Keep flames away
5. Read instructions
6. Keep away from children

**Battery Warning Label**

**Battery Warning Label**

## Voltmeter Test

Refer to Voltmeter Test. The voltmeter test provides a general indicator of battery condition. Check the voltage of the battery to verify that it is in a 100 percent fully charged condition. If the open circuit (disconnected) voltage reading is below 12.6V, charge the battery and then re-check the voltage after the battery has set for one to two hours.

**Voltmeter Test**

| READING IN VOLTS | PERCENT OF CHARGE |
|---|---|
| 12.7 | 100 |
| 12.6 | 75 |
| 12.3 | 50 |
| 12.0 | 25 |
| 11.8 | 0 |

## Cleaning and Inspection

Battery top must be clean and dry. Dirt and electrolyte on top of the battery can cause battery to self-discharge.

1. Clean battery top.

2. Clean cable connectors and battery terminals using a wire brush or fine grit sandpaper to remove any oxidation.

3. Inspect and clean the battery screws, clamps and cables. Check for breakage, loose connections and corrosion.

4. Check the battery posts for melting or damage caused by overtightening.

5. Inspect the battery for discoloration, a raised top or a warped or distorted case. This might indicate that the battery has been frozen, overheated or overcharged.

6. Inspect the battery case for cracks or leaks.

## Charging

---

Never charge a battery without first reviewing the instructions for the charger being used. In addition to the manufacturer's instructions, follow these general safety precautions.

Charge the battery if any of the following conditions exist:

- Vehicle lamps appear dim.
- Electric starter sounds weak.
- Battery has not been used for an extended period of time.

**⚠WARNING**

**Explosive hydrogen gas, which escapes during charging, could cause death or serious injury. Charge battery in a well-ventilated area. Keep open flames, electrical sparks and smoking materials away from battery at all times. KEEP BATTERIES AWAY FROM CHILDREN. (00065a)**

**⚠WARNING**

**Batteries contain sulfuric acid, which could cause severe burns to eyes and skin. Wear a protective face shield, rubberized gloves and protective clothing when working with batteries. KEEP BATTERIES AWAY FROM CHILDREN. (00063a)**

1. Perform a voltmeter test to determine the state of charge. If battery needs to be charged, proceed to the next step.

2. Place the battery on a level surface.

**⚠WARNING**

**Unplug or turn OFF battery charger before connecting charger cables to battery. Connecting cables with charger ON can cause a spark and battery explosion, which could result in death or serious injury. (00066a)**

**⚠WARNING**

**Connect positive (+) battery cable first. If positive (+) cable should contact ground with negative (-) cable connected, the resulting sparks can cause a battery explosion, which could result in death or serious injury. (00068a)**

**⚠WARNING**

**Disconnect negative (-) battery cable first. If positive (+) cable should contact ground with negative (-) cable connected, the resulting sparks can cause a battery explosion, which could result in death or serious injury. (00049a)**

**CAUTION**

**Do not reverse the charger connections described in the following steps or the charging system of the motorcycle could be damaged. (00214a)**

*NOTES:*

- *The figures listed in the Amp-hour table assume that the battery is charging at room temperature. If warmer than room temperature, use a slightly shorter charging time. If colder, use a slightly longer charging time.*
- *The use of constant current chargers to charge sealed maintenance free batteries is not recommended. Any overcharge will cause dry-out and premature battery failure. If a constant current charger is the only type available, do not exceed the charge times listed in 28 Amp-Hour Battery Charging Rate/Times and do not continue charging the battery if it gets hot. When charging, never exceed 15 volts.*

3. Connect the red battery charger lead to positive (+) terminal of the battery.

4. Connect the black battery charger lead to negative (-) terminal of the battery.

   *NOTE:*

   *If the battery is still in the vehicle, connect the negative lead to the chassis ground. Make sure that the ignition and all electrical accessories are turned off.*

5. Step away from the battery and turn on the charger.

**⚠WARNING**

**Unplug or turn OFF battery charger before disconnecting charger cables from battery. Disconnecting clamps with charger ON can cause a spark and battery explosion, which could result in death or serious injury. (00067a)**

6. After the battery is fully charged, turn OFF the charger and disconnect the black battery charger lead to the negative (-) terminal of the battery.

7. Disconnect the red battery charger lead to the positive (+) terminal of the battery.

8. Mark the charging date on the battery.

**28 Amp-Hour Battery Charging Rate/Times**

| READING (VOLTS) | PERCENT OF CHARGE | 3 AMP CHARGER | 6 AMP CHARGER | 10 AMP CHARGER | 20 AMP CHARGER |
|---|---|---|---|---|---|
| 12.7 | 100 | - | - | - | - |
| 12.6 | 75 | 2.5 hours | 1.25 hours | 45 minutes | 25 minutes |
| 12.3 | 50 | 5 hours | 2.5 hours | 1.5 hours | 50 minutes |
| 12.0 | 25 | 7.5 hours | 3.75 hours | 2.25 hours | 70 minutes |
| 11.8 | 0 | 10 hours | 5 hours | 3 hours | 1.5 hours |

## Storage

**CAUTION**

**Turn engine over a few times to be sure there is no oil in the crankcase and that all oil has been pumped back into the oil tank. Stop engine and re-check oil level. Failure to do so can result in engine damage. (00071a)**

**CAUTION**

**Do not allow battery to completely discharge. The electrolyte in a discharged battery will freeze. The more discharged a battery is, the more easily it can freeze and crack the battery case. (00218a)**

If the motorcycle will not be operated for several months, such as during the winter season, remove the battery from the motorcycle and fully charge.

If the motorcycle is to be stored with the battery installed, it will be necessary to connect a battery tender to maintain charge. See an authorized dealer for more information.

Self-discharge is a normal condition and occurs continuously. The rate of self-discharge depends on the ambient temperature and the battery's state of charge.

- Batteries discharge at a faster rate at higher ambient temperatures.
- To reduce the self-discharge rate, store battery in a cool (not freezing), dry place.
- Charge the battery every month if stored at temperatures below 60° F 16° C .
- Charge the battery more frequently if stored in a warm area above 60° F 16° C .

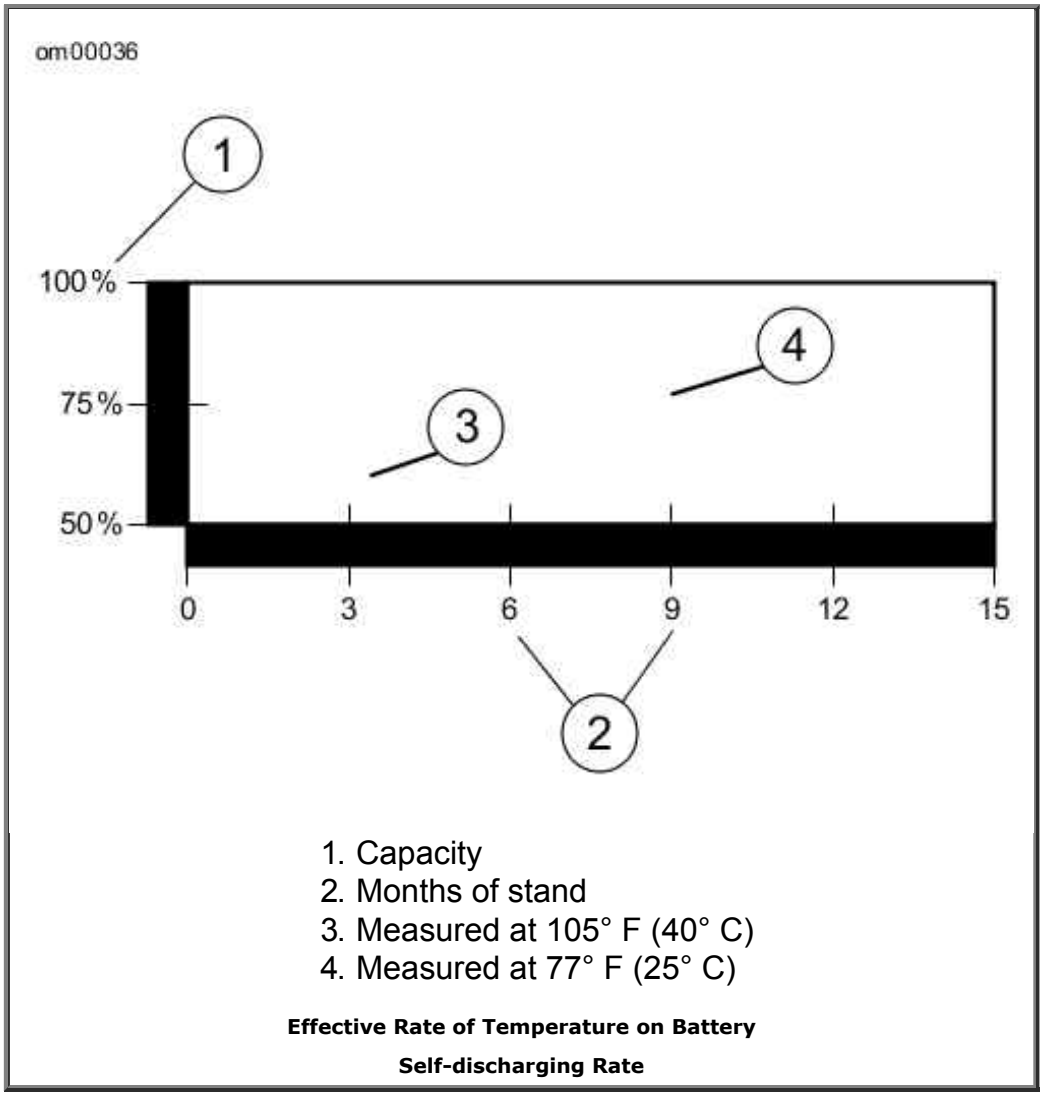


**Battery: Touring Models**

## Disconnection and Removal

1. Remove seat.

   *NOTE:*

   *The ECM caddy has an opening in the front right corner allowing access to the negative battery terminal.*

2. See ECM Caddy: Touring Models. Press latches (2) away from the ECM (1) and detach from ECM caddy (3).

3. Remove fastener (4) from rear of ECM caddy.

4. Remove ECM caddy from battery compartment.

**⚠WARNING**

**Disconnect negative (-) battery cable first. If positive (+) cable should contact ground with negative (-) cable connected, the resulting sparks can cause a battery explosion, which could result in death or serious injury.**

**(00049a)**

5. See Battery Compartment: Touring Models. Unthread bolt and remove battery negative cable (black) from battery negative (-) terminal.
6. Unthread bolt and remove battery positive cable (red) from battery positive (+) terminal.
7. Pull up on strap to lift battery out from compartment.

## Installation and Connection

---

**CAUTION**

**Connect the cables to the correct battery terminals. Failure to do so could result in damage to the motorcycle electrical system. (00215a)**

**⚠WARNING**

**Connect positive (+) battery cable first. If positive (+) cable should contact ground with negative (-) cable connected, the resulting sparks can cause a battery explosion, which could result in death or serious injury. (00068a)**

**⚠WARNING**

**Do not allow positive (+) battery cable to contact ground with negative (-) cable connected. Resulting sparks can cause a battery explosion, which could result in death or serious injury. (00069a)**

*NOTE:*

*Make sure strap is inside compartment under battery. The strap handle should remain outside the compartment.*

1. See Battery Compartment: Touring Models. Place the fully charged battery into compartment with terminals toward the front of the vehicle. Lay strap handle over top of battery.

**CAUTION**

**Do not over-tighten bolts on battery terminals. Use recommended torque values. Over-tightening battery terminal bolts could result in damage to battery terminals. (00216a)**

2. Insert bolt through battery positive cable (+) (red) into threaded hole of battery positive (+) terminal.
3. Tighten bolt to 60-96 in-lbs (6.8-10.8 Nm).

4. Insert bolt through battery negative cable (black) into threaded hole of battery negative (-) terminal.

5. Tighten bolt to 60-96 in-lbs (6.8-10.8 Nm).

**CAUTION**

**Keep battery clean and lightly coat terminals with petroleum jelly to prevent corrosion. Failure to do so could result in damage to battery terminals. (00217a)**

6. Apply a light coat of petroleum jelly or corrosion retardant material to both battery terminals.

7. See ECM Caddy: Touring Models. Install ECM caddy over battery compartment. Tighten fastener to 15-20 ft-lbs (20-27 Nm).

8. Align ECM with latches on caddy. Snap ECM into place and slide to left side of vehicle until ECM rests against bracket on left side of caddy and rests on guide pins. The negative battery terminal should be visible through the caddy.

**⚠WARNING**

**After installing seat, pull upward on seat to be sure it is locked in position. While riding, a loose seat can shift causing loss of control, which could result in death or serious injury. (00070b)**

9. Install seat.

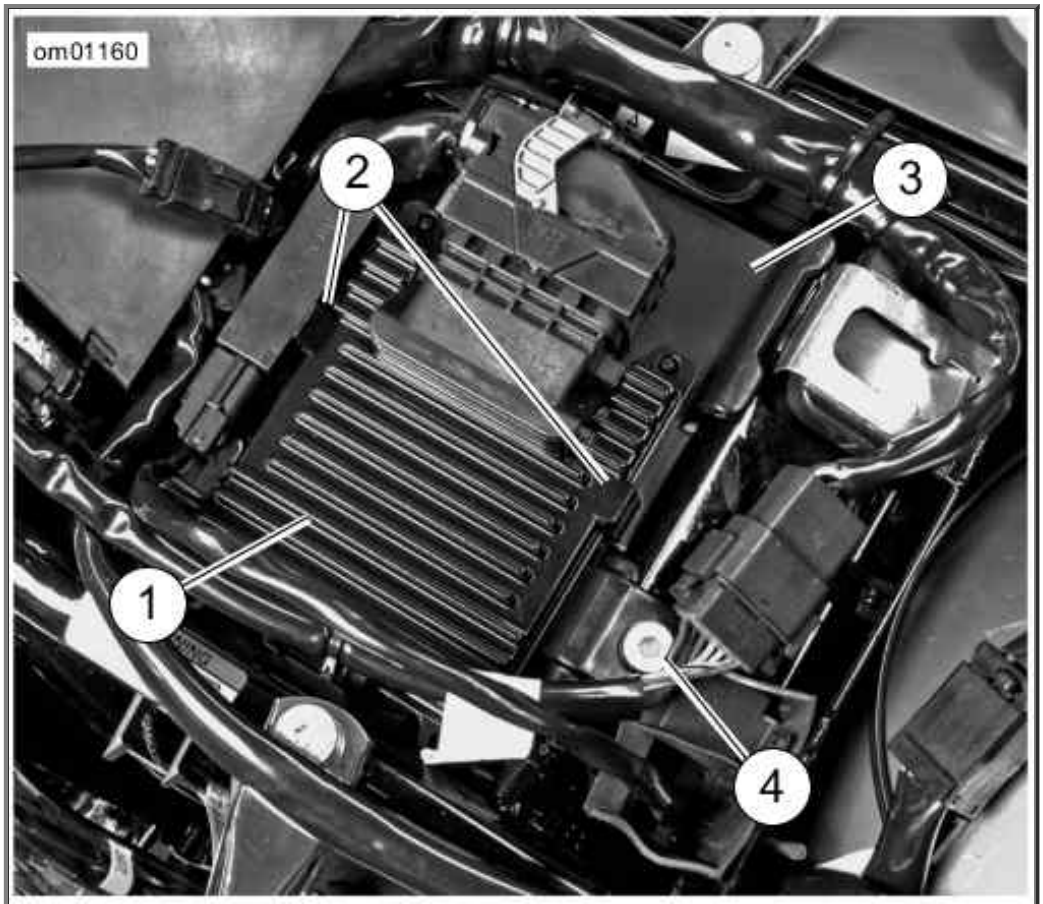


1. Electronic control module (ECM)
2. Latches
3. ECM caddy
4. ECM caddy fastener

**ECM Caddy: Touring Models**

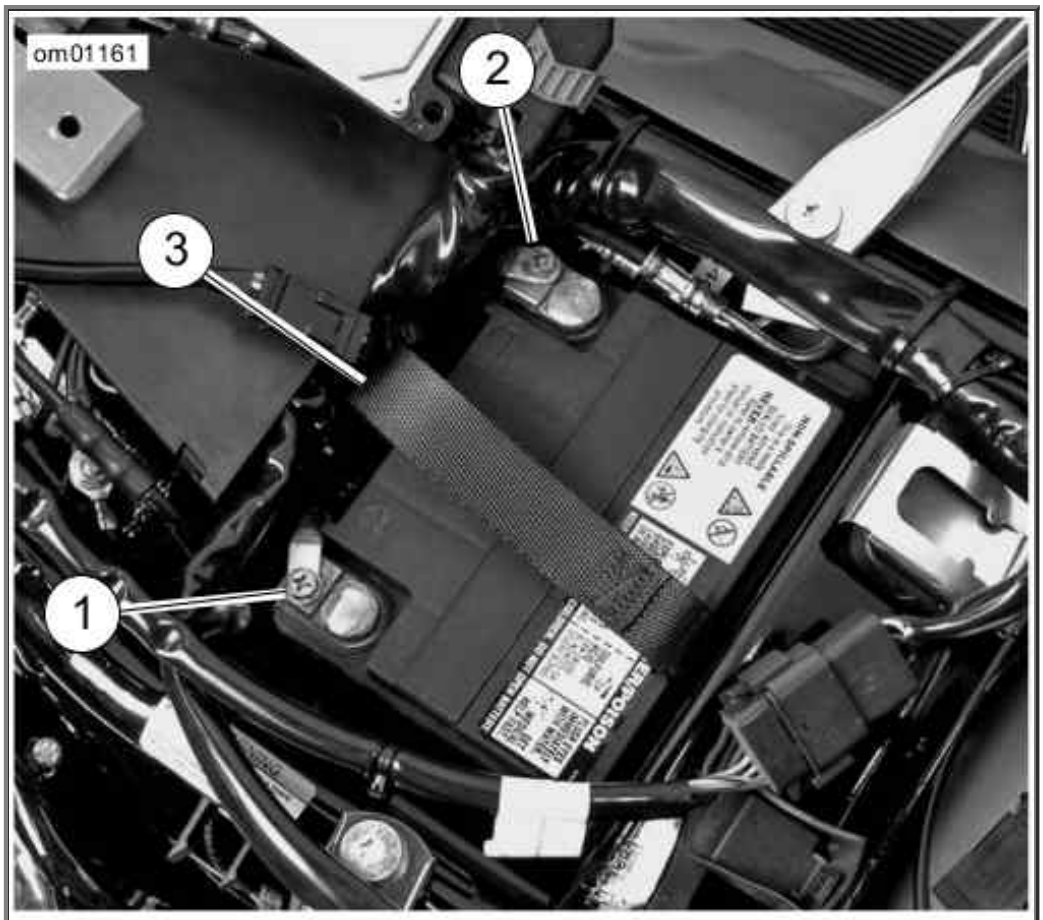


1. Positive terminal
2. Negative terminal
3. Battery strap

**Battery Compartment: Touring Models**

## Jump Starting

Harley-Davidson does not recommend jump-starting a motorcycle. However, there may be circumstances when it is necessary to do so. Therefore, we suggest jump-starting be performed as follows:

**⚠WARNING**

**Be sure jumper cables touch only appropriate battery terminals or ground. Allowing jumper cables to touch each other can result in sparks and a battery explosion, which could result in death or serious injury. (00072a)**

**⚠WARNING**

**Explosive hydrogen gas, which escapes during charging, could cause death or serious injury. Charge battery in a well-ventilated area. Keep open flames, electrical sparks and smoking materials away from battery at all times. KEEP BATTERIES AWAY FROM CHILDREN. (00065a)**

**CAUTION**

**Harley-Davidson motorcycles have a 12 Volt battery. Be sure the booster vehicle has a 12 Volt system. Failure to do so could result in vehicle damage. (00220a)**

*NOTE:*

*This procedure presumes the BOOSTER battery is in another vehicle.*

1. Turn off all unnecessary lamps and accessories.

## Positive Cable

---

2. See Jump Start Cable Connections. Connect one end of a jumper cable to the DISCHARGED battery positive (+) terminal (1).
3. Connect the other end of the same cable to the BOOSTER battery positive (+) terminal (2).

## Negative Cable

---

**⚠WARNING**

**Do not connect negative (-) cable to or near the discharged battery negative (-) terminal. Doing so could cause a spark and explosion, which could result in death or serious injury. (00073a)**

4. Connect one end of a jumper cable to the BOOSTER battery negative (-) terminal (3).

**CAUTION**

**Do not connect the negative (-) cable to painted or chrome parts. Doing so could result in discoloration at the attachment point. (00221a)**

5. Connect other end of the same cable (4) to a safe ground, (away from the DISCHARGED battery).
6. Start motorcycle.
7. Disconnect cables in reverse order of steps 2, 3, 4, 5. That is: steps 5, 4, 3, 2.

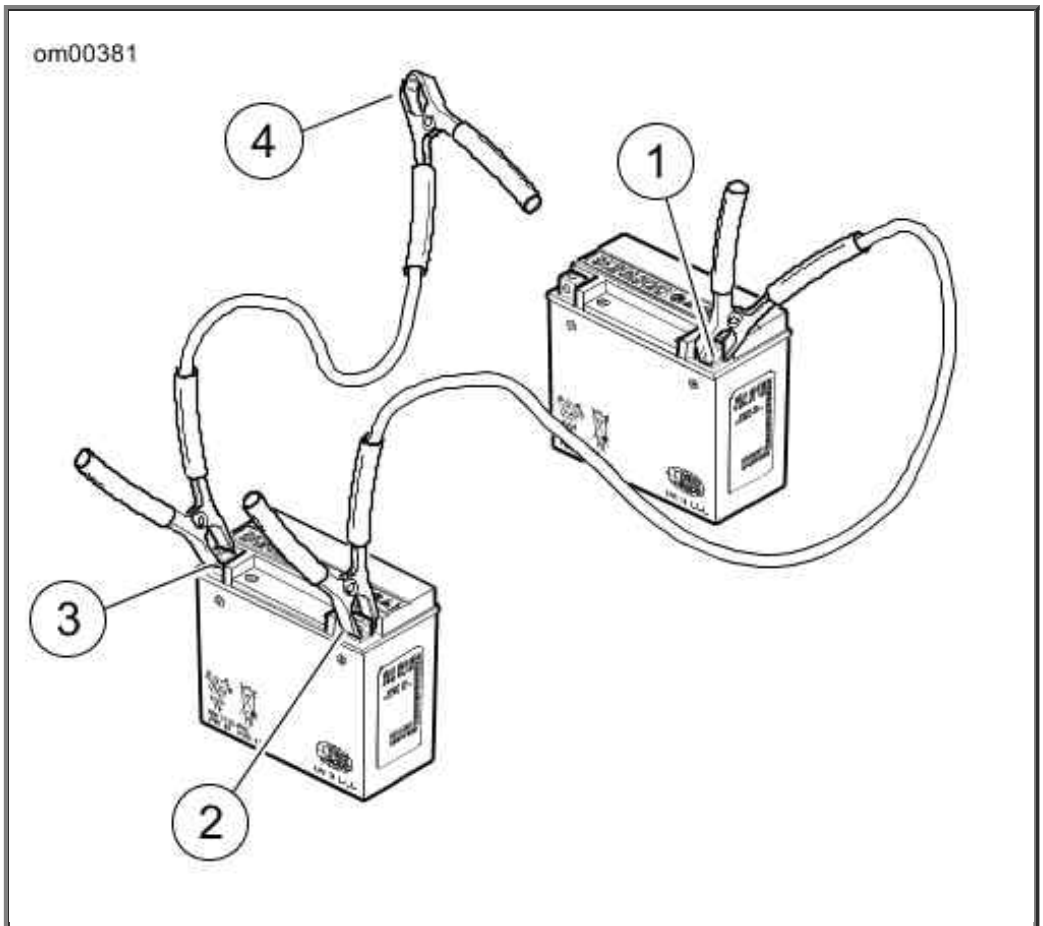


1. Discharged battery positive (+) terminal
2. Booster battery positive (+) terminal
3. Booster battery negative (-) terminal
4. Ground

**Jump Start Cable Connections**

### Electrical Protection: FLHTCUSE3

---

## System Fuse Removal

---

**CAUTION**

**Do not skip any steps for fuse replacement. Skipping fuse replacement steps can result in damage to the sound system and/or other motorcycle systems. (00223a)**

Fuses are located under left side cover.

For electrical problems, it is best to see a Harley-Davidson dealer who has necessary parts and equipment to perform electrical services.

*NOTE:*

*Removal of side covers during electrical service requires no tools. Gently pull side cover to remove. Align barbed studs on side cover with grommets in frame and push to install.*

1. Place the ignition/headlamp key switch in the OFF position.

2. Remove left saddlebag and side cover.

3. Press latch on bottom of fuse block cover and swing bottom of the cover out. Remove the cover.

   *NOTE:*

   *The fuse block cover has a fuse puller attachment that may be used to remove fuses.*

4. See Fuses: FLHTCUSE3 and refer to Fuses: FLHTCUSE3. Remove fuse and inspect the element.

**CAUTION**

**Always use replacement fuses that are of the correct type and amperage rating. Use of incorrect fuses can result in damage to electrical systems. (00222a)**

5. Replace the fuse if the element is burned or broken.

   *NOTE:*

   *Automotive type ATO fuses are used for replacements. Two spare fuses can be found in the fuse block.*

6. Insert the top of the fuse block cover in upper retainer and press bottom of cover to snap into place.

7. Install left side cover and saddlebag.

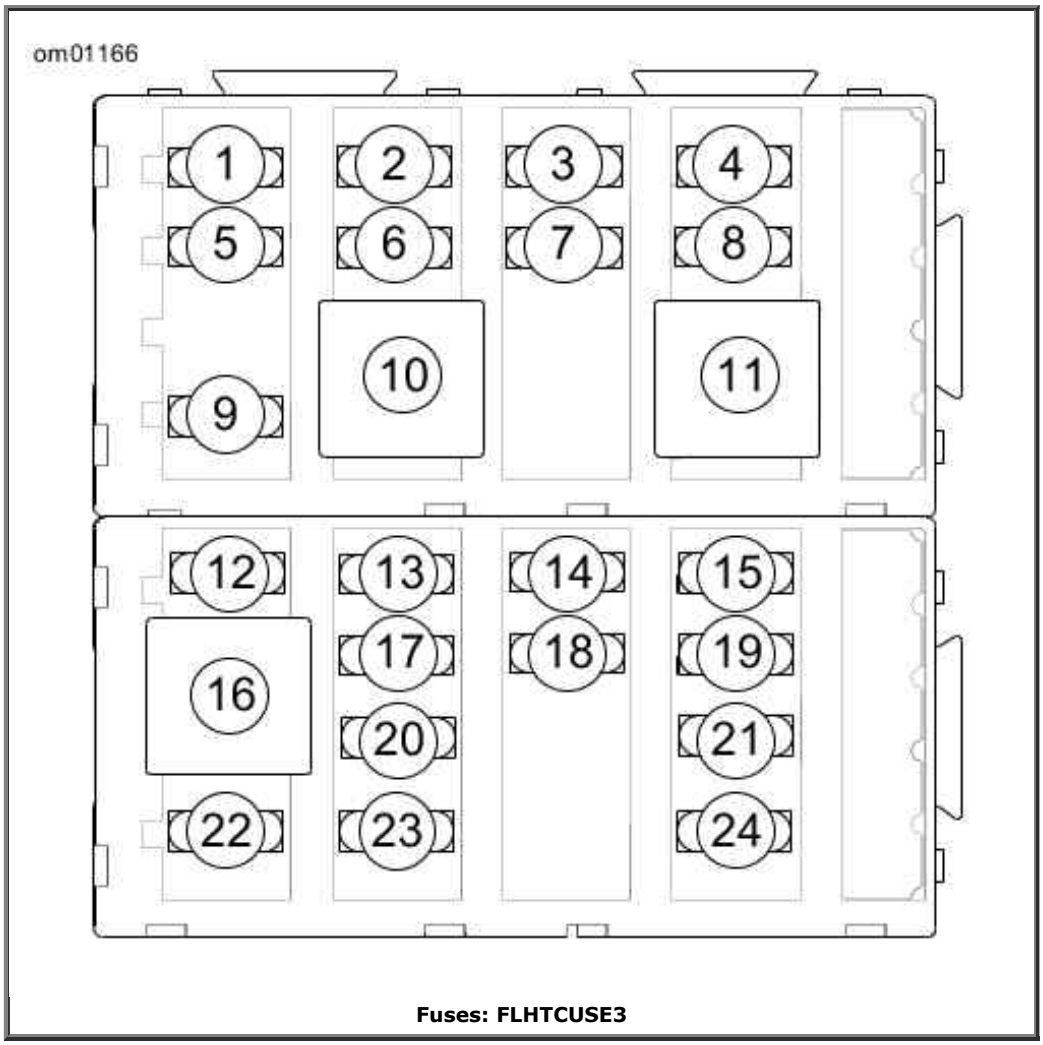


**Fuses: FLHTCUSE3**

| ITEM | FUSE | ITEM | FUSE | ITEM | FUSE | ITEM | FUSE |
|---|---|---|---|---|---|---|---|
| 1 | Brake (15 amp) | 2 | Accessory (15 amp) | 3 | P&A (15 amp) | 4 | Radio power (15 amp) |
| 5 | Radio memory (15 amp) | 6 | Battery (15 amp) | 7 | ECM power (15 amp) | 8 | Power lock (15 amp) |
| 9 | Fuel pump (15 amp) | 10 | System relay | 11 | Start relay | 12 | P&A ignition (2A max) |
| 13 | Instruments (15 amp) | 14 | Ignition (15 amp) | 15 | Engine control (15 amp) | 16 | Brake relay |
| 17 | Headlamp (15 amp) | 18 | Lights (15 amp) | 19 | Spare (5 amp) | 20 | Heated grips (5 amp) |
| 21 | Spare (15 amp) | 22 | ABS (30 amp) | 23 | Amplifier (30 amp) | 24 | Spare (30 amp) |

## Maxi-Fuse

See Maxi-Fuse. A 40 amp maxi-fuse is located at the right side of the fuse block. The maxi-fuse protects the electrical components in the vehicle.

*NOTE:*

*Removal of the maxi-fuse will disable all systems except the starter motor/solenoid.*

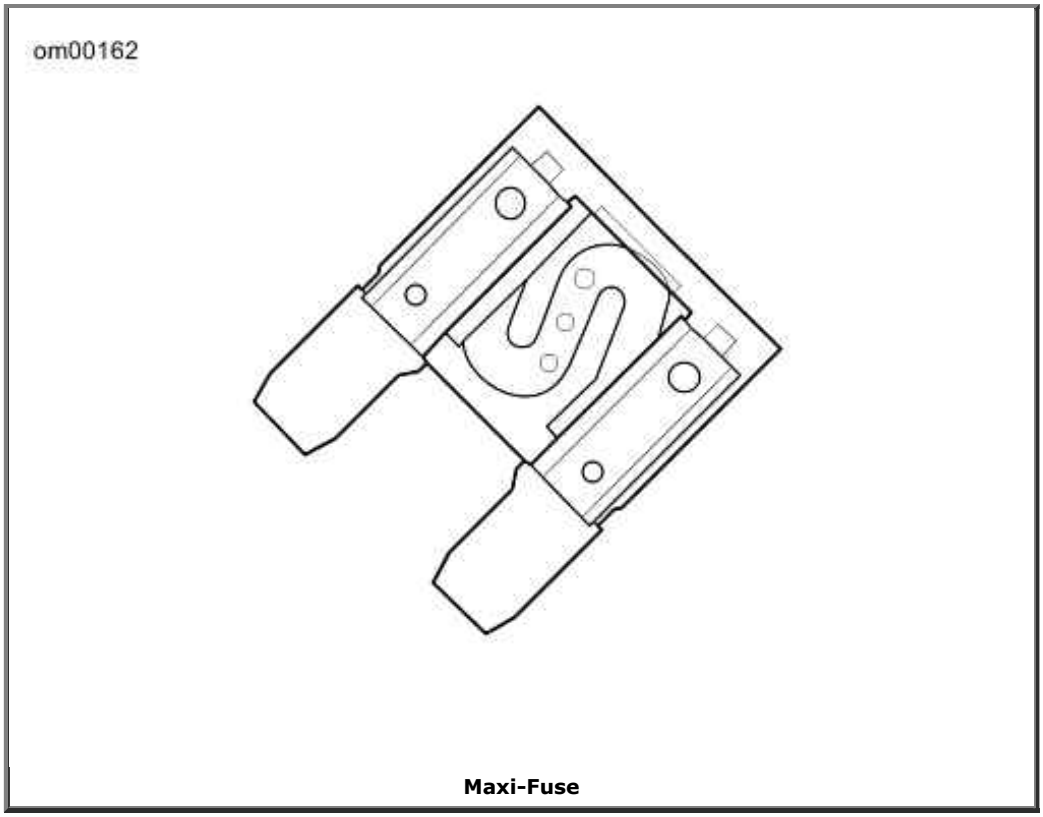


**Maxi-Fuse**

### Remote Control Garage Door Opener: FLHTCUSE3

## FCC Notices

*NOTE:*

*Changes or modifications to this unit not expressly approved by the manufacturer could void the user's authority to operate the equipment.*

This equipment has been tested and found to comply with the limits for Class B digital devices pursuant to Part 15, Subpart B of the FCC Rules. These limits are designed to provide reasonable protection against harmful interference in a residential environment. This equipment generates, uses, and can radiate radio frequency energy, and if not installed and used in accordance with the instruction manual, may cause harmful interference to radio communications. However, there is no guarantee that interference will not occur in a particular installation. If this equipment does cause harmful interference to radio or television reception, which can be determined by turning the equipment off and on, the user is encouraged to try to correct the interference by one or more of the following measures.

1. Reorient or relocate the receiving antenna.
2. Increase the distance between the equipment and the receiver.
3. Connect the equipment to an outlet on a circuit different from that to which the receiver is connected.
4. Consult dealer or experienced radio/TV technician for help.

## Install the Receiver

1. Unplug the power cord from the garage door drive unit to prevent door activation during installation.

2. Find an unswitched 110V power outlet in the garage that is located either highest in the garage, or the closest to the front of the garage, or both. Locate the Harley-Davidson remote control garage door opener receiver here.

   *NOTES:*
   - *With some brands of garage door opener systems, it may be necessary to plug in the Harley-Davidson receiver at a location some distance from the door opener. If the Harley-Davidson receiver is plugged in too close to the original opener receiver, effective transmission range may be significantly reduced on both systems.*
   - *Opener may not function properly with steel buildings.*

3. Find the two garage door activation switch terminals on one of these locations.

   a. The existing wall mounted, hand wired garage door opener button.

   b. The garage door drive unit to which the garage door opener button is connected.

4. Fasten the stripped end of the Harley-Davidson garage door opener receiver wires to the door opener terminals that activate the door opener drive unit. Refer to the door opener manufacturer's documentation for terminal locations and connections.

   *NOTE:*

   *Do not remove original wires from the original connections on the door opener button or on the drive unit terminals.*

5. Assemble and install the garage door opener button in its original location.

6. Route the Harley-Davidson garage door opener receiver wires connected in Step 4 to the power outlet selected in Step 2.

7. See Garage Door Opener Receiver: FLHTCUSE3. Plug the connector on the Harley-Davidson garage door opener receiver wires into the receptacle (1) on the back of the Harley-Davidson garage door opener receiver.

8. Plug the garage door opener receiver into the selected power outlet.

9. Plug the power cord from the garage door drive unit into the power outlet.

10. Press the wall mounted garage door opener button to set the button operation.

## Program the Receiver and Transmitter

---

The receiver must be programmed to receive the transmitter frequency. This process may require two people depending on how far apart the receiver and transmitter are during the programming process.

1. Check that a red light is visible on the front of the Harley-Davidson garage door opener receiver, indicating power to the receiver.

2. See Garage Door Opener Receiver: FLHTCUSE3. Press and hold the Set button (3) on the Harley-Davidson garage door opener receiver. The LED (2) blinks continuously while the Set button is pressed.

3. Set the motorcycle ignition switch to IGN. Switch the headlamp beam switch using one of these sequences. When the receiver receives a signal from the transmitter, the LED on the transmitter turns off.

    a. Starting from Low beam, switch High, then Low.

    b. Starting from High beam, switch Low, then High.

4. Release the Set button on the receiver.

    *NOTE:*

    *Clear all obstructions away from between the transmitter and receiver before testing the operation of the garage door opener.*

5. Test the garage door opener, high beam, and low beam headlamp operation.

    *NOTE:*

    *When the transmitter is activated by toggling the headlamp switch, the red LED on the transmitter illuminates for one second to indicate that the transmitter is functioning correctly.*

6. Set the motorcycle ignition switch to OFF.

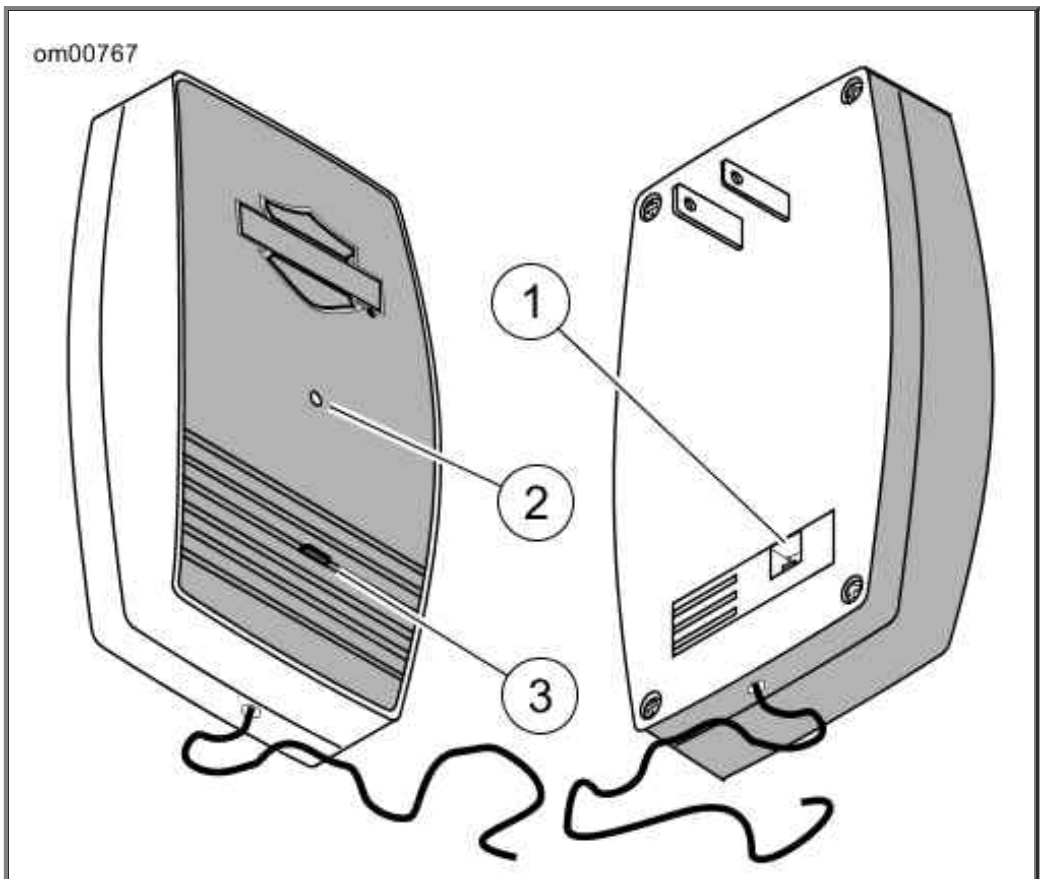


1. Wire connector/plug receptacle
2. LED
3. Set button

**Garage Door Opener Receiver: FLHTCUSE3**

## Seat: FLHTCUSE3

*NOTE:*

*The heated seat will automatically shut off after an hour and a half of continuous operation to prevent overheating. To reset the seat, park the motorcycle and turn the ignition key to OFF for 5 minutes before restarting.*

## Removal

**CAUTION**

**Detach passenger seat strap before removing seat. Failure to do so can result in damage to rear fender paint. (00225a)**

1. Open right saddlebag cover and remove fastener from seat strap bracket.
2. Pull upward on strap to free it from slot in bracket. Move passenger seat strap to side of seat.
3. Remove mounting fastener to detach seat mounting bracket from top of rear fender.
4. See Seat Tongue: Touring Models. Push seat rearward to free tongue from slot in the seat.
5. Separate the seat connector half from the power connector half.
6. Remove seat.

## Installation

1. Mate the heated seat connector half to the power connector half found in the frame backbone Y in front of the battery.
2. See Seat: FLHTCUSE3. Place seat on frame backbone.
3. See Seat Tongue: Touring Models. Firmly push front of seat downward and rearward until tongue engages slot in seat.
4. Push seat forward until rear fender seat retention nut is centered in hole of mounting bracket.
5. Install seat mounting fastener. Tighten to 20-40 ft-lbs (2.3-4.5 Nm).

   *NOTE:*

   *If the seat retention nut is damaged or lost, see service manual for instructions.*

   **⚠WARNING**

   **After installing seat, pull upward on seat to be sure it is locked in position. While riding, a loose seat can shift causing loss of control, which could result in death or serious injury. (00070b)**

6. See Seat Strap Bracket Fastener: FLHTCUSE3. Install end of seat strap in slot of seat

strap bracket. Install seat strap bracket fastener. Tighten to 48-72 in-lbs (5.4-8.1 Nm).

7. Pull up on seat to verify that it is properly secured.

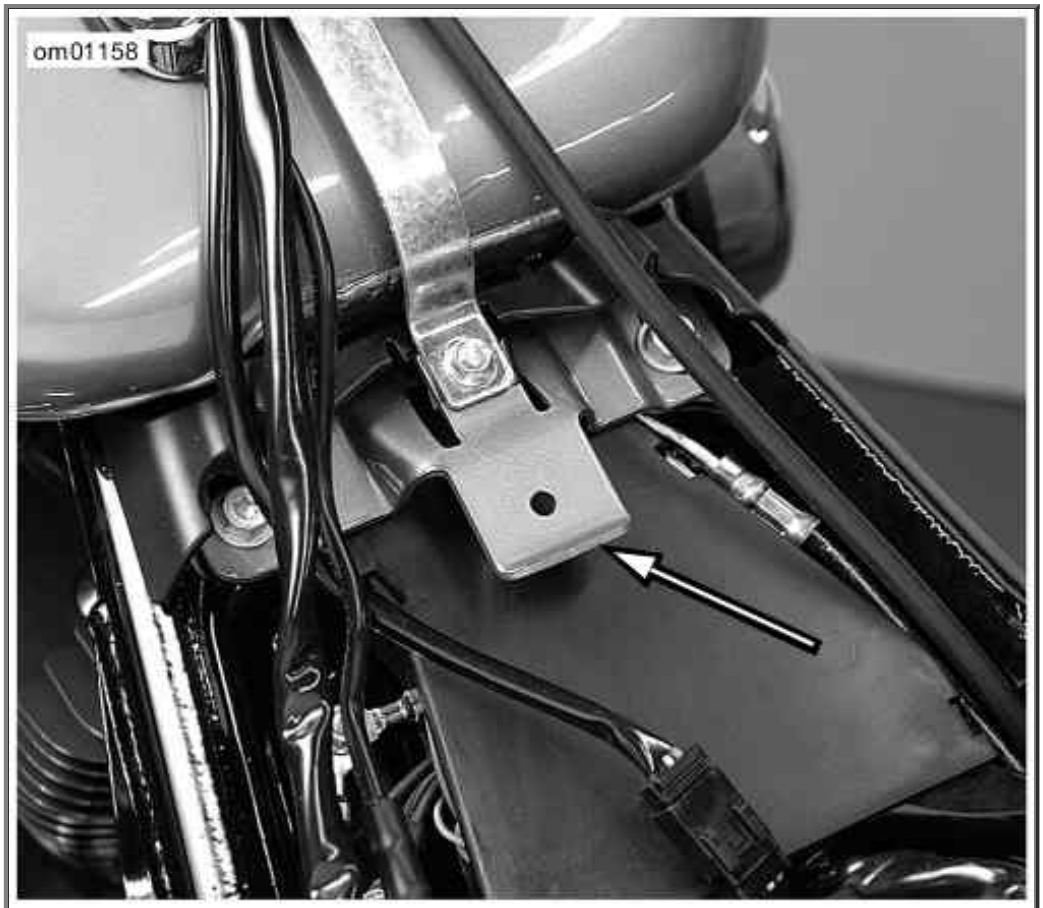


**Seat Tongue: Touring Models**

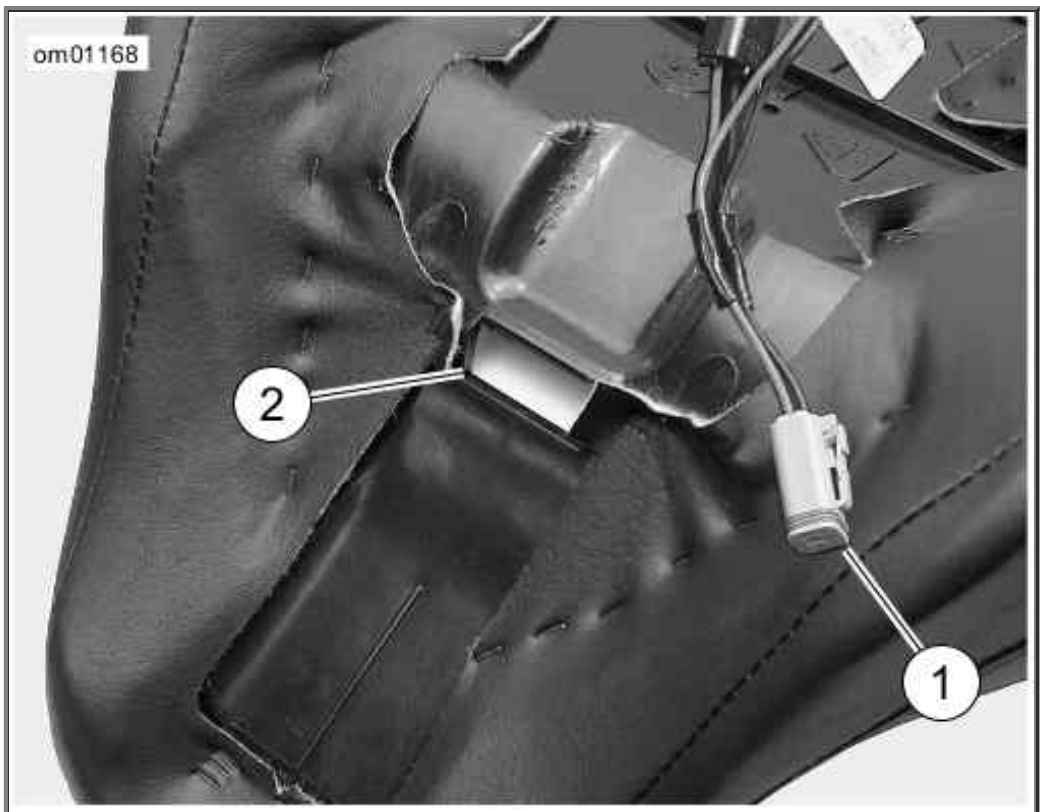


1. Connector
2. Mounting slot

**Seat: FLHTCUSE3**

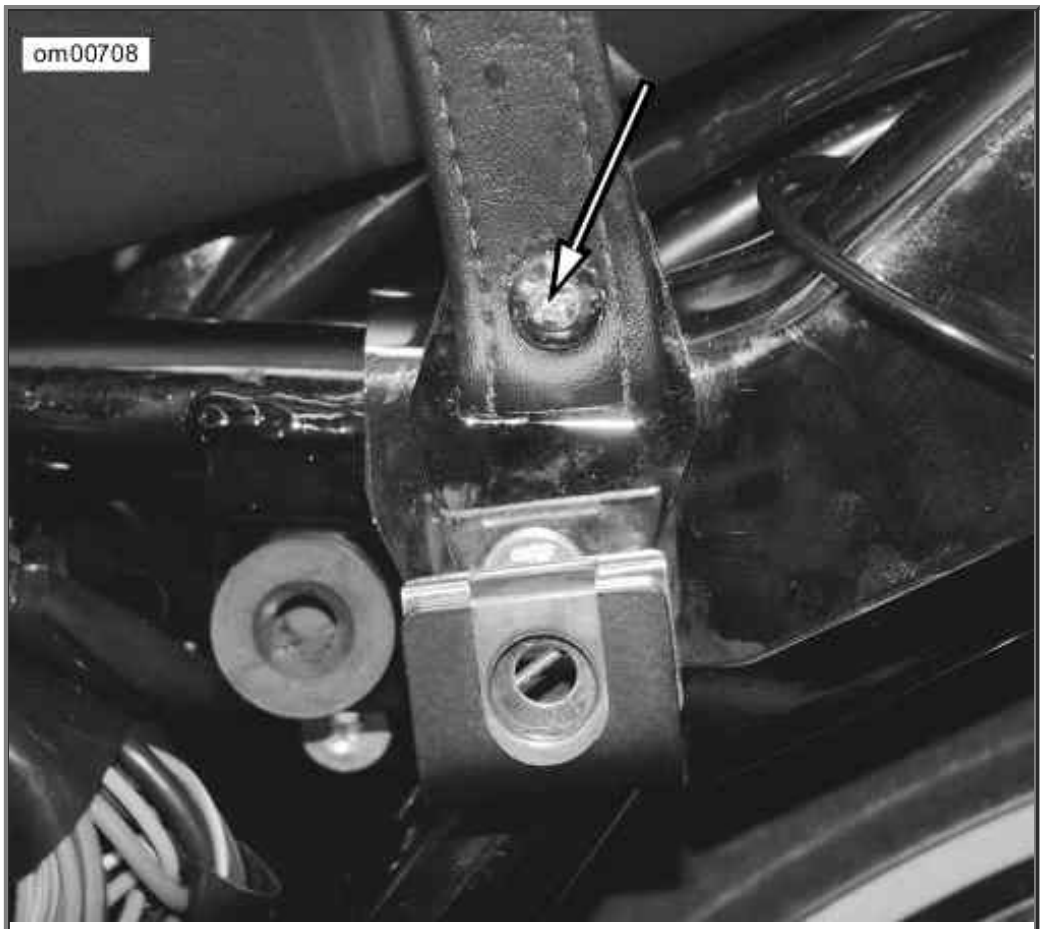


**Seat Strap Bracket Fastener: FLHTCUSE3**

### Rider Backrest: FLHTCUSE3

## Removal

1. Spread the seat covering at the base of the backrest exposing the two spring loaded support arms.
2. See Rider Backrest Installation: FLHTCUSE3. Using two hands, squeeze the spring loaded support arms together.
3. Pull upward to remove the backrest from the bracket.

## Installation

1. Spread the seat opening to expose the keyed backrest support bracket.
2. Squeeze together the two spring loaded support arms on the backrest.
3. See Rider Backrest Mounting Bracket: FLHTCUSE3. Insert the support arms into the keyed support bracket. Select one of three height adjustment holes.
4. Test to assure the seat is secured into the bracket.

*NOTE:*

*The backrest is spring loaded to assist the passenger in getting on and off the vehicle.*

## Adjustment

**Height Adjustment:** Select one of three sets of holes in the bracket to fit the backrest to the rider.

**Tilt (Angle) Adjustment:** Locate the set screw behind the eyelet in the back of the backrest. To set an angle that fits the rider, use a 3/16 in. Allen wrench to loose, adjust and tighten the screw to fix the angle of the backrest.

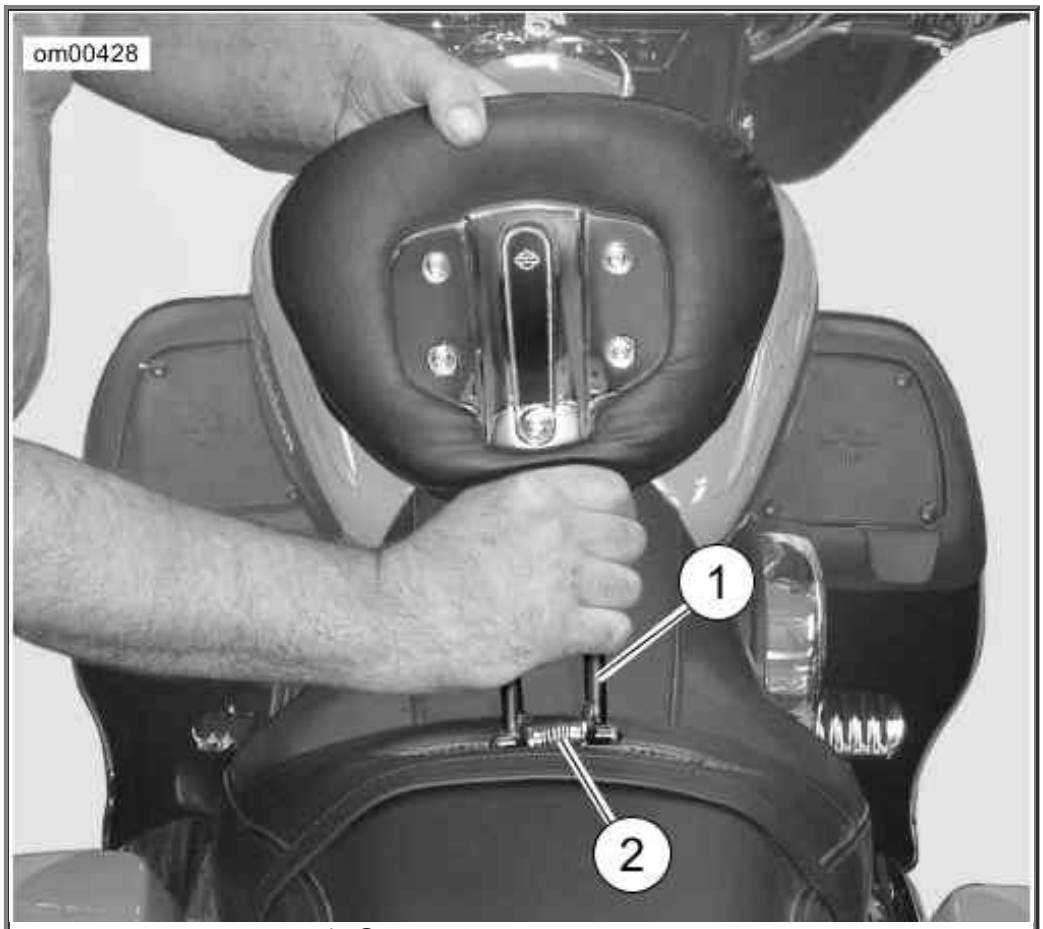


1. Support arms
2. Spring

**Rider Backrest Installation: FLHTCUSE3**

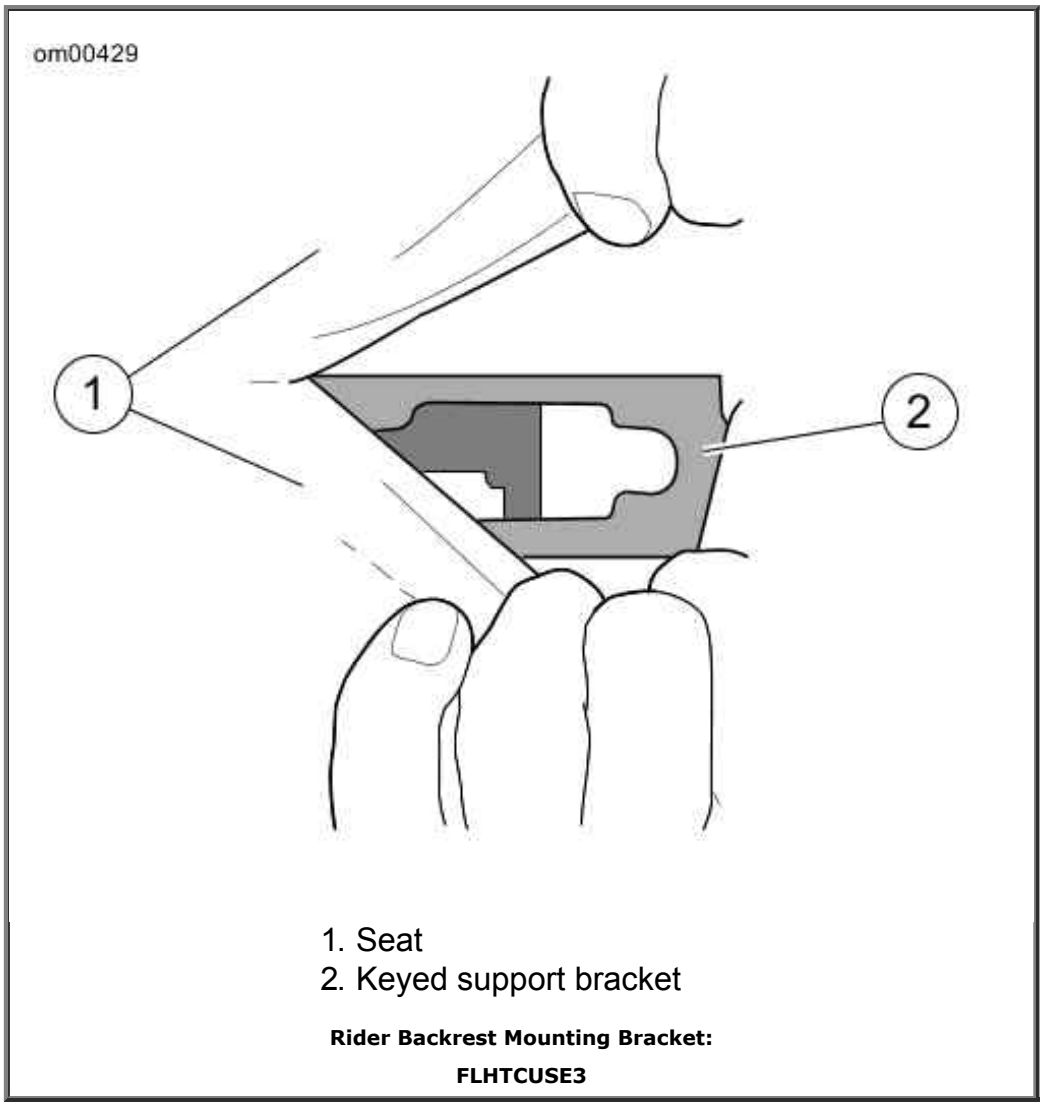


1. Seat
2. Keyed support bracket

**Rider Backrest Mounting Bracket: FLHTCUSE3**

**Radio/CB Antenna Replacement: FLHTCUSE3**

## Replacing Antenna

1. See Radio Antenna: FLHTCUSE3. Pull the protective rubber boot (1) off of the antenna mast (2).
2. With 2 mm allen wrench (3), remove lower setscrew.
3. Unscrew antenna mast from chassis mount.
4. Fit rubber boot to replacement antenna.
5. Screw replacement antenna onto Tour-Pak mount.
6. Install and tighten the set screw.

1. Rubber boot
2. Antenna mast, AM/FM
3. Allen wrench

**Radio Antenna: FLHTCUSE3**

**Motorcycle Storage**

## Placing Motorcycle in Storage

**CAUTION**

**Proper storage is important for the trouble-free operation of your motorcycle. See your Owner's Manual for storage recommendations or see a Harley-Davidson dealer. Improper storage procedures can lead to equipment damage. (00046a)**

If the motorcycle will not be operated for several months, such as during the winter season, there are several tasks which should be performed. These steps will protect parts against corrosion, preserve the battery and prevent the build-up of gum and varnish in the fuel system.

**⚠WARNING**

**Do not store motorcycle with gasoline in tank within the home or garage where open flames, pilot lights, sparks or electric motors are present. Gasoline is extremely**

**flammable and highly explosive, which could result in death or serious injury. (00003a)**

*NOTE:*

*Make a list of everything you do and fasten it to a handgrip. When you take the motorcycle out of storage, this list will be your reference/checklist to get your motorcycle in operating condition.*

1. Fill fuel tank and add a gasoline stabilizer. Use one of the commercially available gasoline stabilizers and follow the manufacturer's instructions.
2. Warm motorcycle to operating temperature. Change oil and turn engine over to circulate the new oil.
3. Check and adjust belt if necessary.
4. Check tire inflation. Adjust to proper inflation pressure.
5. To protect the vehicle's body panels, engine, chassis and wheels from corrosion, follow the cosmetic care procedures described in the Accessory Maintenance section of this owner's manual prior to storage.
6. Prepare battery for winter storage. See Battery: General.

**⚠WARNING**

**Explosive hydrogen gas, which escapes during charging, could cause death or serious injury. Charge battery in a well-ventilated area. Keep open flames, electrical sparks and smoking materials away from battery at all times. KEEP BATTERIES AWAY FROM CHILDREN. (00065a)**

7. If the motorcycle is to be stored with security system armed, it will be necessary to connect a Battery Tender to maintain battery charge. If security system will not be armed and a Battery Tender is not available, either:
    a. Disconnect negative battery cable.
    b. Remove Maxi-fuse (if applicable).
8. If motorcycle is to be covered, use a material such as light canvas that will breathe. Plastic materials that do not breathe promote the formation of condensation.

## Removing Motorcycle From Storage

---

**⚠WARNING**

**The clutch failing to disengage can cause loss of control, which could result in death or serious injury. Prior to starting after extended periods of storage, place transmission in gear and push vehicle back and forth several times to assure proper clutch disengagement. (00075a)**

1. See Battery: General for proper battery care. Charge and install the battery.
2. Remove and inspect the spark plugs. Replace if necessary.
3. Clean the air cleaner element.
4. Start the engine and run until it reaches normal operating temperature. Turn off engine.
5. Check amount of oil in the oil tank.
6. Check the transmission lubricant level.
7. Check controls to be sure they are operating properly. Operate the front and rear brakes, throttle, clutch and shifter.
8. Check steering for smoothness by turning the handlebars through the full operating range.

**⚠WARNING**

**Be sure tires are properly inflated, balanced and have adequate tread. Inspect your tires regularly and see a Harley-Davidson dealer for replacements. Riding with excessively worn, unbalanced or under-inflated tires can adversely affect stability and handling, which could result in death or serious injury. (00014a)**

9. Check tire pressure. Incorrect pressure will result in poor riding characteristics and can affect handling and stability.
10. Check all electrical equipment and switches including the stop lamp, turn signals and horn for proper operation.
11. Check for any fuel, oil or brake fluid leaks.

**CAUTION**

**Turn engine over a few times to be sure there is no oil in the crankcase and that all oil has been pumped back into the oil tank. Stop engine and re-check oil level. Failure to do so can result in engine damage. (00071a)**

# Accessories Maintenance

## General Maintenance

Maintain chrome and aluminum regularly to check that they retain their original shine and luster. Take care to keep your new Harley-Davidson motorcycle cleaned and waxed as often as possible to inhibit rust and corrosion.

## Cleaning Your Motorcycle

To aid you in keeping your motorcycle clean, see your Harley-Davidson dealer for cleaning, polishing and waxing products.

Harley-Davidson recommends the following products:

- SUNWASH® (Part No. 94659-98): for general cleaning/washing of all surfaces.
- BUG REMOVER (Part No. 94657-98): for removing bugs from all surface finishes.
- HARLEY® SPRAY CLEANER (Part No. 99817-99): all purpose cleaner and quick detailer for metal surfaces.
- HARLEY GLOSS® (Part No. 94627-98): all purpose surface protectant provides UV protection and a gloss finish.
- Swirl & Scratch Treatment (Part No. 94655-98): a compound that removes fine scratches and swirls.

**⚠WARNING**

**Observe warnings on labels of cleaning compounds. Failure to follow warnings could result in death or serious injury. (00076a)**

**⚠WARNING**

**Do not wash brake discs with cleaners containing chlorine or silicone. Cleaners containing chlorine and silicone can impair brake function, which could result in death or serious injury. (00077a)**

**CAUTION**

**Do not use pressure washers to clean wheel bearings, sprocket bearings, steering head bearings and swingarm pivot bearings. Doing so can result in equipment damage. (00489b)**

## Leather Care

---

*NOTE:*

*Many Harley-Davidson accessories and seats are either made of leather or have leather inserts. Natural materials age differently and require different care than man-made materials. Seat covers and panels made of leather will gain "character", such as wrinkles, with age. Leather is porous and organic and each leather product will settle into its own distinct form with use. Your leather product will mature into its own custom shape and style from the sun, rain and the miles. This maturing is natural and will enhance the custom quality of your Harley-Davidson motorcycle.*

Leather must be periodically cleaned and treated to maintain its appearance and extend its life. Clean and treat leather once a season or more frequently under adverse conditions.

**CAUTION**

**Do not use bleach or detergents containing bleach on**

**saddlebags, seats, tank panels or painted surfaces. Doing so can result in equipment damage. (00229a)**

- Do not use ordinary soap to clean leather or fur. It could dry or remove the oils from the leather.
- Use ONLY a good quality saddle soap to clean leather. Be sure you rinse saddle soap off thoroughly before treating leather.
- Never try to dry leather quickly, using artificial means. Always let leather dry naturally, at room temperature.

1. Vacuum or blow dust off.
2. Thoroughly clean leather with a good quality saddle soap, following manufacturer's directions. Rinse thoroughly with clean sponge or cloth and water. Allow leather to dry.
3. Once leather is dry, treat with a good quality leather treatment, such as LEATHERCARE (Part No. 98261-91).
4. Always allow leather to dry completely before using.

## Paint Leafing Graphics

The handcrafted process of metal leafing yields a highly reflective surface that catches the eye as no other material does. Due to metallic leafing being a natural material, however, the individual sheets impart to the gilded surface unique characteristics.

Acceptable natural characteristics (examples):

- Leaf seam and leaf color variance
- Leaf patch
- Leaf texture
- Leaf low spot (burnish void)
- Gathering (wrinkles)

## Wheel Care: FLHTCUSE3

Your motorcycle has chrome plated wheels. Damage from harsh chemicals, acid based wheel cleaners, brake dust and lack of maintenance can occur. Regular washing and the use of a corrosion protectant will help to maintain their original appearance. Harley-Davidson WHEEL AND TIRE CLEANER (Part No. 94658-98) is recommended for cleaning wheels and tires. Then use HARLEY GLOSS (Part No. 94627-98) to protect the wheel surfaces.

*NOTES:*

- *It is imperative that the wheels are cared for weekly to guard against pitting and corrosion.*
- *Corrosion of these components is not considered to be a defect in materials or workmanship.*

Harley-Davidson recommends the following products:

- WHEEL AND TIRE CLEANER (Part No. 94658-98): cleaner/degreaser for wheels, tires and engine.
- HARLEY GLOSS (Part No. 94627-98): all purpose surface protection the provides UV protection and a gloss finish.

See a Harley-Davidson dealer for cleaning, polishing and waxing products.

### Windshields

**CAUTION**

**Polycarbonate windscreens/windshields require proper attention and care to maintain. Failure to maintain polycarbonate properly can result in damage to the windscreen/windshield. (00483d)**

- Do not clean in hot sun or high temperature.
- Powdered, abrasive or alkaline cleanser will damage the windscreen/windshield.

**CAUTION**

**Do not use harsh chemicals including rain sheeting products on Harley-Davidson windshields. They can cause dulling or hazing. If you want to use a windshield protectant on your windshield, try Harley Glaze Polish and Sealant (00231a)**

**CAUTION**

**Do not use benzine, paint thinner, gasoline or any other type of harsh cleaner on the windshield. Doing so will damage the windshield surface. (00232a)**

*NOTES:*

- *To remove minor surface scratches use NOVUS® No. 2 SCRATCH REMOVER (Part No. 99836-94T).*
- *Covering the windshield with a clean, wet cloth for approximately 15-20 minutes before washing will make dried bug removal easier.*

1. Use mild soap and warm water to wash the windshield.
2. Wipe dry with a soft, clean towel.

*NOTE:*

*To treat your Lexan windshield with water repellent use WINDSHIELD WATER REPELLENT TREATMENT (Part No. 99841-02).*

### Miscellaneous Lubrication

## Hinges, Latches, Etc.

Lubricate the rub points of latches and hinges using either Lubit-8 Tufoil (Part No. 94968-85TV) or Tri-flow as required.

Lubricate the fingers on the saddlebag latches where they engage the hinge.

# Troubleshooting

## Troubleshooting: General

**⚠WARNING**

**The troubleshooting section of the Owner's Manual is a guide to diagnose problems. Read the service manual before performing any work. Improper repair and/or maintenance could result in death or serious injury. (00080a)**

The following checklist of possible operating troubles and their probable causes will be helpful in keeping your motorcycle in good operating condition. More than one of these conditions may be causing trouble and should be carefully checked.

## Engine: FLHTCUSE3

## Starter Does Not Operate or Does Not Turn Engine Over

1. Engine run switch in OFF position.
2. Ignition switch not ON.
3. Discharged battery or loose or corroded connections (solenoid chatters).
4. Jiffy stand not in retracted position (required for international models only).
5. Blown fuse.

## Engine Turns Over But Does Not Start

1. Fuel tank empty.
2. Discharged battery or loose or broken battery terminal connections.
3. Fouled spark plugs.
4. Spark plug cable connections loose or in bad condition and shorting.
5. Loose or corroded wire or cable connection(s) at coil or battery.
6. Fuel pump inoperative. See dealer.

## Starts Hard

1. Spark plugs in bad condition, have improper gap, or are partially fouled.

2. Spark plug cables in bad condition and leaking.
3. Battery nearly discharged.
4. Loose wire or cable connection(s) at one of the battery terminals or at coil.
5. Engine oil too heavy (winter operation).
6. Water or dirt in fuel system.
7. Fuel pump inoperative. See dealer.
8. Check ACR operation. See dealer.

## Starts But Runs Irregularly or Misses

---

1. Spark plugs in bad condition or partially fouled.
2. Spark plug cables in bad condition and leaking.
3. Spark plug gap too close or too wide.
4. Battery nearly discharged.
5. Damaged wire or loose connection at battery terminals or coils.
6. Intermittent short circuit due to damaged wire insulation. See dealer.
7. Water or dirt in fuel system, filter or carburetor.
8. Fuel vent system plugged. See dealer.
9. One or more injectors fouled. See dealer.

## A Spark Plug Fouls Repeatedly

---

1. Incorrect spark plug.

## Pre-ignition or Detonation (Knocks or Pings)

---

1. Incorrect fuel.
2. Incorrect spark plug for the kind of service.

## Overheats

---

1. Insufficient oil supply or oil not circulating.
2. Heavy carbon deposit from lugging engine. See dealer.
3. Insufficient air flow over cylinder heads during extended periods of idling or parade duty.

## Excessive Vibration

1. Rear fork pivot shaft nuts loose. See dealer.
2. Front engine mounting bolts loose. See dealer.
3. Engine to transmission mounting bolts loose. See dealer.
4. Broken frame. See dealer.
5. Front chain or links tight as a result of insufficient lubrication or belt badly worn.
6. Wheels and/or tires damaged. See dealer.
7. Vehicle not properly aligned. See dealer.

### Electrical System

## Alternator Does Not Charge

1. Module not grounded. See dealer.
2. Engine ground wire loose or broken. See dealer.
3. Loose or broken wires in charging circuit. See dealer.

## Alternator Charge Rate is Below Normal

1. Weak battery.
2. Excessive use of add-on accessories.
3. Loose or corroded connections.
4. Extensive periods of idling or low speed riding.

### Transmission

## Transmission Shifts Hard

1. Bent shifter rod. See dealer.

## Transmission Jumps Out of Gear

1. Worn shifter dogs in transmission. See dealer.

## Clutch Slips

1. Worn friction discs. See dealer.
2. Insufficient clutch spring tension. See dealer.

## Clutch Drags or Does Not Release

1. Primary chaincase overfilled.
2. Clutch discs warped. See dealer.

## Clutch Chatters

1. Friction discs or steel discs worn or warped. See dealer.

### Brakes

## ABS System Behavior

1. ABS lamp does not shut off above 3 mph 5 km/h . See dealer.
2. Other ABS symptoms. Refer to ABS Symptoms and Conditions.

## Brakes Do Not Hold Normally

1. Master cylinder low on fluid. See dealer.
2. Brake line contains air bubbles. See dealer.
3. Master or wheel cylinder piston worn. See dealer.
4. Brake pads contaminated with grease or oil. See dealer.
5. Brake pads badly worn. See dealer.
6. Brake disc badly worn or warped. See dealer.
7. Brake fades because of heat build up. Excessive braking or brake pads dragging. See dealer.
8. Brake drags. Insufficient hand lever free play. See dealer.

# Warranties and Responsibilities

### Warranty and Maintenance

This Owner's Manual contains your new motorcycle warranty.

It is the owner's responsibility to follow the scheduled mileage intervals as specified; all of the

specified maintenance services must be performed to keep your warranty valid.

1. Make an appointment with a Harley-Davidson dealer for inspection and service just before you have ridden 1000 miles 1600 kilometers .
2. Bring this Owner's Manual with you when you visit your dealer to have your motorcycle inspected and serviced.
3. Have the dealer technician sign at the proper mileage interval. The records should be retained by the owner as proof of proper maintenance.
4. Keep receipts covering any parts, service or maintenance performed. These records should be transferred to each subsequent owner.

**⚠WARNING**

**Do not use aftermarket parts and custom made front forks which can adversely affect performance and handling. Removing or altering factory installed parts can adversely affect performance and could result in death or serious injury. (00001a)**

Harley-Davidson dealerships are independently owned and operated and may sell parts and accessories that are not manufactured or approved by Harley-Davidson. Therefore, you should understand that we are not and cannot be responsible for the quality, suitability, or safety of any non-Harley-Davidson part, accessory or design modification, including labor, which may be sold and/or installed by our dealers.

## Keeping It All Harley-Davidson

---

1. Keep your Harley-Davidson completely Harley-Davidson.
2. Insist that your dealer uses only Genuine replacement parts to keep your Harley-Davidson motorcycle and its warranty intact.

Exacting design and stringent testing ensure performance and warranty coverage. Again, insist on Genuine parts for your genuine Harley-Davidson motorcycle.

*NOTE:*

*Installing off-road or competition parts to enhance performance may void all or part of your new motorcycle warranty. See the Harley-Davidson Limited Warranty in this manual or a Harley-Davidson dealer for details.*

**CAUTION**

**It is possible to overload your motorcycle's charging system by adding too many electrical accessories. If your combined electrical accessories operating at any one time consume more electrical current than your vehicle's charging system can produce, the electrical consumption can discharge the battery and cause vehicle electrical system damage. See a Harley-Davidson dealer for advice**

**about the amount of current consumed by additional electrical accessories, or for necessary wiring changes. (00211b)**

## Important Moving Information

If you move from your present address, or sell your motorcycle, please fill out and mail the post card at the back of this manual. This is necessary in the event that the Company needs to contact the owner concerning information that could affect the safe operation of this motorcycle.

## California Evaporative Emission Controls: 2008 Models

All new model year 2008 Harley-Davidson motorcycles sold in the State of California are equipped with an evaporative emission control system. This system is designed to meet the CARB regulations in effect at the time of manufacture.

The system requires a small amount of maintenance. Periodic inspection is required to make sure hoses are properly routed, not kinked or blocked and that all fittings are secure. Mounting hardware should also be checked periodically for tightness.

## EPA Noise Regulations in the United States

EPA noise regulations require that the following statements be included in the Owner's Manual.

TAMPERING WITH NOISE CONTROL SYSTEM PROHIBITED: Federal law prohibits the following acts or the causing thereof: (1) The removal or rendering inoperative by any person other than for purposes of maintenance, repair, or replacement of any device or element of design incorporated into any new vehicle for the purpose of noise control prior to its sale or delivery to the ultimate purchaser or while it is in use, or (2) the use of the vehicle after such device or element of design has been removed or rendered inoperative by any person.

AMONG THOSE ACTS PRESUMED TO CONSTITUTE TAMPERING ARE THE ACTS LISTED BELOW.

1. Replacing the muffler(s) and/or the entire exhaust system with parts not certified to be noise legal for street use.
2. Removing or modifying the muffler internal baffles in any way.
3. Replacing the air intake/cleaner assembly with one not certified to be noise legal for street use.
4. Modifying the air intake/cleaner assembly in such a way as to make the vehicle no longer noise legal for street use.

Harley-Davidson recommends that any and all noise related maintenance be done by an authorized Harley-Davidson dealer using genuine Harley-Davidson parts.

## Warranty/Service Information

Any authorized Harley-Davidson dealer is responsible for providing the warranty repair work on your motorcycle. If you have any questions regarding warranty obligations contact your selling dealer.

For normal service work or warranty work under the above conditions, you may obtain the name and location of your nearest U.S. Harley-Davidson dealer by calling 1-800-490-9635 (toll free), in any state except Alaska and Hawaii.

*NOTE:*

*The number shown above is accessible only with a touch-tone phone in the United States.*

### Reporting Safety Defects in United States

Safety defects must be reported to the National Highway Traffic Safety Administration (NHTSA) and Harley-Davidson.

## NHTSA Statement

If you believe that your vehicle has a defect which could cause a crash or could cause injury or death, you should immediately inform the National Highway Traffic Safety Administration (NHTSA) in addition to notifying Harley-Davidson.

If NHTSA receives similar complaints, it may open an investigation, and if it finds that a safety defect exists in a group of vehicles, it may order a recall and remedy campaign. However, NHTSA cannot become involved in individual problems between you, your dealer, or Harley-Davidson.

To contact NHTSA, refer to NHTSA Contacts.

**NHTSA Contacts**

| ITEM | DATA |
|---|---|
| Phone | Call the Auto Safety Hot Line toll-free at 1-888-DASH-2DOT |
| Mail | U.S. Department of Transportation, National Highway Traffic Safety Administration, Office of Defects Investigation, NVS-210, 400 7th Street S.W., Washington, D.C. 20590 |
| Web site | www.nhtsa.dot.gov |

You can also obtain other information about motor vehicle safety from the hot line.

### Owner Transfer Identification Form

When purchasing a pre-owned Harley-Davidson or Buell, we encourage you to submit an Owner Transfer Notification Form. It is critical that new owner information is communicated to Harley-Davidson. New owner information is required to be on file with Harley-Davidson to transfer an Extended Service Plan Contract. Harley-Davidson is also required by the National Traffic and Motor Vehicle Safety Act to notify all owners in the event of a recall. The form may be obtained at any Harley-Davidson dealer.

### Required Documentation for Imported Motorcycles

If a Harley-Davidson is imported into the United States, additional documentation is required to be eligible for the United States Manufacturer's Limited Warranty. A Harley-Davidson dealer can provide a form explaining the requirements.

## Limited Motorcycle Warranty

### 2008 HARLEY-DAVIDSON MOTORCYCLE LIMITED WARRANTY

---

## 24 Months/Unlimited Miles

---

Harley-Davidson warrants for any new 2008 Harley-Davidson motorcycle/sidecar that an authorized Harley-Davidson dealer will repair or replace without charge any parts found under normal use to be defective in factory materials or workmanship. Such repair and replacement will be Harley-Davidson's sole obligation and the customer's sole remedy under this warranty.

THERE IS NO OTHER EXPRESS WARRANTY (OTHER THAN THE SEPARATE EMISSIONS AND NOISE WARRANTIES) ON THE MOTORCYCLE. ANY IMPLIED WARRANTY OF MERCHANTABILITY OR FITNESS FOR PARTICULAR PURPOSE IS LIMITED TO THE DURATION OF THIS WARRANTY.

Some states do not allow limitations on how long an implied warranty lasts, so the above limitation may not apply to you.

TO THE FULLEST EXTENT ALLOWED BY LAW, HARLEY-DAVIDSON AND ITS DEALERS SHALL NOT BE LIABLE FOR LOSS OF USE, INCONVENIENCE, LOST TIME, COMMERCIAL LOSS OR OTHER INCIDENTAL OR CONSEQUENTIAL DAMAGES. Some states do not allow the exclusion or limitation of incidental or consequential damages, so the above limitation or exclusion may not apply to you. This warranty gives you specific legal rights, and you may have other rights which vary from state to state.

The following terms and conditions apply to this warranty:

## Duration

---

1. The duration of this limited warranty is twenty four months, starting from the earlier of (a) the date of initial retail purchase and delivery from an authorized Harley-Davidson dealer, or (b) the third anniversary of the last day of the model year of the motorcycle/sidecar. Your dealer will submit an electronic Sales and Warranty Registration form to initiate your warranty.

2. Any unexpired portion of this limited warranty will be transferred to subsequent owners, upon the resale of the motorcycle/sidecar during the warranty period.

## Owner's Obligations

---

To obtain warranty service, return your motorcycle/sidecar at your expense within the warranty period to an authorized dealer. Our dealer should be able to provide warranty service during normal business hours and as soon as possible, depending upon the workload of the dealer's service department and the availability of necessary parts.

Harley-Davidson Motor Company, P.O. Box 653, Milwaukee, Wisconsin 53201, U.S.A.

## Exclusions

This warranty will not apply to any motorcycle/sidecar as follows:

1. Which has not been operated or maintained as specified in the Owner's Manual.
2. Which has been abused, misused, improperly stored, used "off the highway," or used for racing or competition of any kind.
3. Which is not manufactured to comply with the laws of the market in which it is registered.
4. Installing off-road or competition parts to enhance performance may void all or part of your new motorcycle warranty. See a Harley-Davidson dealer for details.

## Other Limitations

This warranty does not cover:

1. Parts and labor for normal maintenance as recommended in the Owner's Manual, or the replacement of parts due to normal wear and tear including such items as the following: tires, lubrication, oil and filter change, fuel system cleaning, battery maintenance, engine tune-up, spark plugs, brake, clutch and chain/belt adjustment (including chain replacement).
2. Cosmetic concerns that arise as a result of owner abuse, lack of proper maintenance or environmental conditions (except concerns that result from defects in material or workmanship, which are covered by this warranty for the duration of the warranty period).
3. Any cosmetic condition existing at the time of retail delivery that has not been documented by the selling dealer prior to retail delivery.
4. Defects or damage to the motorcycle caused by alterations outside of Harley-Davidson factory specifications.

## Important: Read Carefully

1. Our dealers are independently owned and operated and may sell other products. Because of this, HARLEY-DAVIDSON IS NOT RESPONSIBLE FOR THE SAFETY, QUALITY, OR SUITABILITY OF ANY NON-HARLEY-DAVIDSON PART, ACCESSORY OR DESIGN MODIFICATION INCLUDING LABOR WHICH MAY BE SOLD AND/OR INSTALLED BY OUR DEALERS.
2. This warranty is a contract between you and the manufacturer. It is separate and apart from any warranty you may receive or purchase from the dealer. The dealer is not authorized to alter, modify, or in any way change the terms and conditions of this warranty.
3. Any warranty work or parts replacement authorized by the manufacturer will not preclude the manufacturer from later relying on any exclusion where applicable.

## Limited Noise Warranty

### 2008 HARLEY-DAVIDSON MOTORCYCLE NOISE CONTROL SYSTEM LIMITED

**WARRANTY**

---

The following warranty applies to the noise control system, is in addition to the MOTORCYCLE LIMITED WARRANTY and EMISSION CONTROL SYSTEM LIMITED WARRANTY, and applies only to motorcycles sold in the U.S.

Harley-Davidson Motor Company warrants that this vehicle is designed and built so as to conform at the time of sale with applicable regulations of the U.S. Environmental Protection Agency (as tested following F-76 Drive-By test procedure) and that it is free from defects in materials and workmanship which would cause this motorcycle not to meet U.S. Environmental Protection Agency Standards within 1 year or 3,730 miles (6,000 kilometers) whichever expires first. Any unexpired portion of this limited warranty will be transferred to subsequent owners, upon the resale of the motorcycle during the warranty period.

THERE IS NO OTHER EXPRESS WARRANTY (OTHER THAN THE SEPARATE MOTORCYCLE AND EMISSIONS WARRANTIES) ON THE MOTORCYCLE. ANY IMPLIED WARRANTY OF MERCHANTABILITY OR FITNESS FOR PARTICULAR PURPOSE IS LIMITED TO THE DURATION OF THIS WARRANTY.

Some states do not allow limitations on how long an implied warranty lasts, so the above limitation may not apply to you.

The warranty period shall begin on the date the motorcycle is delivered to the first retail purchaser or, if the motorcycle is placed in service as a demonstrator or company vehicle prior to sale at retail, on the date it is first placed in service.

THE FOLLOWING ITEMS ARE NOT COVERED BY THE NOISE CONTROL SYSTEM WARRANTY

1. Failures which arise as a result of misuse, alterations, or accident as specified in the Owner's Manual.

2. Replacing, removing, or modifying any portion of the NOISE CONTROL SYSTEM (consisting of the exhaust system and air intake/cleaner assembly) with parts not certified to be legal for street use.

3. Any motorcycle on which the odometer mileage has been changed so that the mileage cannot be determined.

4. TO THE FULLEST EXTENT ALLOWED BY LAW, HARLEY-DAVIDSON AND ITS DEALERS SHALL NOT BE LIABLE FOR LOSS OF USE, INCONVENIENCE, LOST TIME, COMMERCIAL LOSS OR OTHER INCIDENTAL OR CONSEQUENTIAL DAMAGES.

Some states do not allow the exclusion or limitation of incidental or consequential damages, so the above limitation or exclusion may not apply to you.

## Other Rights

---

This warranty gives you specific legal rights, and you may have other rights which vary from state to state.

## Recommendations for Required Maintenance

---

It is recommended that any noise system maintenance be performed by an authorized Harley-Davidson dealer using genuine Harley-Davidson replacement parts. The maintenance, replacement or repair of the noise control system may be performed by any other qualified service outlet or individual. Non-genuine parts may be used only if such parts are certified to comply with U.S. Environmental Protection Agency Standards.

Harley-Davidson Motor Company, P.O. Box 653, Milwaukee, Wisconsin 53201, U.S.A.

## Limited Emission Warranty

### 2008 HARLEY-DAVIDSON EMISSION CONTROL SYSTEM LIMITED WARRANTY

---

The following warranty applies to the emission control system, is in addition to the LIMITED MOTORCYCLE WARRANTY and NOISE CONTROL SYSTEM LIMITED WARRANTY, and applies only to motorcycles sold in the U.S.

Harley-Davidson Motor Company warrants that this vehicle is designed and built so as to conform at the time of sale with applicable regulations of the U.S. Federal Environmental Protection Agency, and that it is free from defects in materials and workmanship which would cause this motorcycle not to meet U.S. Environmental Protection Agency Standards within 5 years or 18,641 miles (30,000 kilometers) whichever expires first. Any unexpired portion of this limited warranty will be transferred to subsequent owners, upon the resale of the motorcycle during the warranty period.

THERE IS NO OTHER EXPRESS WARRANTY (OTHER THAN THE SEPARATE MOTORCYCLE AND NOISE WARRANTIES) ON THE MOTORCYCLE. ANY IMPLIED WARRANTY OF MERCHANTABILITY OR FITNESS FOR PARTICULAR PURPOSE IS LIMITED TO THE DURATION OF THIS WARRANTY.

Some states do not allow limitations on how long an implied warranty lasts, so the above limitation may not apply to you.

The warranty period shall begin on the date the motorcycle is delivered to the first retail purchaser or, if the motorcycle is placed in service as a demonstrator or company vehicle prior to sale at retail, on the date it is first placed in service.

THE FOLLOWING ITEMS ARE NOT COVERED BY THE EMISSION CONTROL SYSTEM WARRANTY

1. Failures which arise as a result of misuse, alterations, accident or non-performance of maintenance as specified in the Owner's Manual.

2. The replacement of parts (such as spark plugs, fuel and oil filters, etc.) used in required maintenance.

3. Any motorcycle on which the odometer mileage has been changed so that the mileage cannot be determined.

4. TO THE FULLEST EXTENT ALLOWED BY LAW, HARLEY-DAVIDSON AND ITS DEALERS SHALL NOT BE LIABLE FOR LOSS OF USE, INCONVENIENCE, LOST TIME, COMMERCIAL LOSS OR OTHER INCIDENTAL OR CONSEQUENTIAL DAMAGES.

Some states do not allow the exclusion or limitation of incidental or consequential damages, so the above limitation or exclusion may not apply to you.

## Other Rights

This warranty gives you specific legal rights, and you may have other rights which vary from state to state.

## Recommendations for Required Maintenance

It is recommended that any emission system maintenance be performed by an authorized Harley-Davidson dealer using genuine Harley-Davidson replacement parts. The maintenance, replacement or repair of the emissions control system may be performed by any other qualified service outlet or individual. Non-genuine parts may be used only if such parts are certified to comply with U.S. Environmental Protection Agency Standards.

Harley-Davidson Motor Company, P.O. Box 653, Milwaukee, Wisconsin 53201, U.S.A.

# Limited Radio Warranty

### 2008 LIMITED RADIO WARRANTY

Harley-Davidson Motor Company warrants that this Harley-Davidson radio will be free from factory defects in material and workmanship, under normal use and service, for a period of twenty four (24) months starting from the earlier of (a) the date of initial retail purchase of the motorcycle/sidecar on which the radio is installed, or (b) the third anniversary of the last day of the model year of the motorcycle/sidecar on which the radio is installed. Any unexpired portion of this limited warranty will be transferred to subsequent owners, upon the resale of the motorcycle during the warranty period. If the motorcycle/sidecar was used as a demonstrator, then the warranty period may have started and/or expired prior to the initial retail sale. See a Harley-Davidson Dealer for details.

This warranty does not cover defects or damage due to abuse, misuse or improper installation, or any radio on a motorcycle which has been registered with Harley-Davidson Motor Company as a collector's vehicle. See a Harley-Davidson dealer for details.

To obtain warranty service, return your motorcycle/sidecar with sound system intact, at your expense, within the warranty period to the selling dealer, or to any other authorized dealer if you have moved a long distance, or are touring a long distance. Our dealer should be able to provide warranty service during his normal business hours and as soon as possible, depending upon his service department's workload and the availability of necessary parts.

The remedy for breach of this warranty is expressly limited to the repair or replacement, without charge for parts and labor, of any part that proves to be defective, AND DOES NOT EXTEND TO LIABILITY FOR CONSEQUENTIAL DAMAGES, COSTS OR EXPENSES, INCLUDING LOSS OF TIME, INCONVENIENCE OR LOSS OF USE OF THE VEHICLE, RESULTING FROM ANY PART THAT PROVES TO BE DEFECTIVE.

THERE IS NO OTHER EXPRESS WARRANTY ON THE RADIO. ANY IMPLIED WARRANTY RELATING TO THIS RADIO, INCLUDING WARRANTIES OR MERCHANTABILITY OR FITNESS FOR A PARTICULAR PURPOSE, IS EXPRESSLY LIMITED TO TWENTY FOUR (24) MONTHS, THE DURATION OF THIS WARRANTY.

(Some states do not allow the limitation of the length of an implied warranty or the exclusion or

limitation of incidental or consequential damages, so the above limitations or exclusions may not apply to you.)

## Other Rights

This warranty gives you specific legal rights, and you may have other rights which vary from state to state in the United States.

Harley-Davidson Motor Company, P.O. Box 653, Milwaukee, Wisconsin 53201, U.S.A.

# Maintenance Scheduling

## Regular Service Intervals

Regular lubrication and maintenance will help keep your new Harley-Davidson operating at peak performance. Your Harley-Davidson dealer knows best how to service your motorcycle with factory approved methods and equipment assuring you of thorough and competent workmanship.

*NOTES:*

- *Refer to Regular Service Intervals: 2008 FLHTCUSE3. Regular maintenance interval operations are required to keep your new motorcycle warranty in force. The use of other than Harley-Davidson approved parts and service procedures may void the warranty. Any alterations to the emission system components, such as the carburetor and exhaust system, may be in violation of Federal and State laws.*
- *Refer to Owner's Maintenance Records. When servicing your motorcycle, bring this owner's manual to the dealership and complete information needed in the blank columns listed.*

**⚠WARNING**

**Perform the service and maintenance operations as indicated in the regular service interval table. Lack of regular maintenance at the recommended intervals can affect the safe operation of your motorcycle, which could result in death or serious injury. (00010a)**

**⚠WARNING**

**If you operate your motorcycle under adverse conditions (severe cold, extreme heat, very dusty environment, very bad roads, through standing water, etc.), you should perform the regular maintenance intervals more frequently to ensure the safe operation of your motorcycle. Failure to maintain your motorcycle could result in death or serious injury. (00094a)**

**Regular Service Intervals: 2008 FLHTCUSE3**

| ITEM SERVICED | PROCEDURE | 1000 MI. | 5000 MI. | 10,000 MI. | 15,000 MI. | 20,000 MI. | 25,000 MI. | NOTES |
|---|---|---|---|---|---|---|---|---|

| | | 1600 KM | 8000 KM | 16,000 KM | 24,000 KM | 32,000 KM | 40,000 KM | |
|---|---|---|---|---|---|---|---|---|
| Engine oil and filter | Replace | X | X | X | X | X | X | |
| Oil lines and brake system | Inspect for leaks | X | X | X | X | X | X | 1 |
| Air cleaner | Inspect, service as required | X | X | X | X | X | X | |
| Tires | Check pressure, inspect tread | X | X | X | X | X | X | |
| Wheel spokes | Check tightness | X | X | | | X | | 1 |
| Primary chaincase lubricant | Replace | X | | X | | X | | |
| Transmission lubricant | Replace | X | | | | X | | |
| Rear belt and sprockets | Inspect, adjust belt | X | X | X | X | X | X | 1 |
| Rear wheel sprocket isolators | Inspect for wear | | | | | | | 5 |
| Brake and clutch controls | Check, adjust and lubricate | X | X | X | X | X | X | 1 |
| Jiffy stand | Inspect and lubricate | X | X | X | X | X | X | 1 |
| Fuel lines and fittings | Inspect for leaks | X | X | X | X | X | X | 1 |
| Fuel tank filter | Replace | | | | | | X | 1 |
| Brake fluid | Check levels and condition | X | X | X | X | X | X | 4 |
| Brake pads and discs | Inspect for wear | X | X | X | X | X | X | |
| Spark plugs | Inspect | X | X | X | X | | X | |
| | Replace | | | | | X | | |
| Electrical equipment and switches | Check operation | X | X | X | X | X | X | |
| Front fork oil | Replace | | | | | | | 1, 2 |
| Steering head bearings | Lubricate | X | | X | | X | | 2 |
| | Adjust | | | | | | X | 1 |
| Air suspension | Check pressure, operation and leakage | X | X | X | X | X | X | 1 |
| Windshield bushings (if applicable) | Inspect | | | X | | X | | 1 |
| Fuel door, Tour-Pak, saddlebags | Lubricate hinges and latches | X | X | X | X | X | X | |
| Critical | Check tightness | X | | X | | X | | 1 |

| | | | | | | | | |
|---|---|---|---|---|---|---|---|---|
| fasteners | | | | | | | | |
| Engine mounts and stablizers | Inspect | | | X | | X | | 1 |
| Battery | Check battery and clean connections | | | | | | | 3 |
| Exhaust system | Inspect for leaks, cracks, and loose or missing fasteners or heat shields | X | X | X | X | X | X | 3 |
| Road test | Verify component and system functions | X | X | X | X | X | X | |
| **NOTES:** | 1. Should be performed by an authorized Harley-Davidson dealer, unless you have the proper tools, service data and are mechanically qualified.<br>2. Disassemble, lubricate and inspect every 50,000 miles (80,000 kilometers).<br>3. Perform annually.<br>4. Change D.O.T. 4 and flush brake system every two years.<br>5. Perform at each rear tire change. | | | | | | | |

**Owner's Maintenance Records**

| SERVICE MILE INTERVAL | DATE | DEALER NUMBER | TECHNICIAN NAME | TECHNICIAN SIGNATURE |
|---|---|---|---|---|
| 1000 MI (1600 KM) | | | | |
| 5000 MI (8000 KM) | | | | |
| 10,000 MI (16,000 KM) | | | | |
| 15,000 MI (24,000 KM) | | | | |
| 20,000 MI (32,000 KM) | | | | |
| 25,000 MI (40,000 KM) | | | | |
| 30,000 MI (48,000 KM) | | | | |
| 35,000 MI (56,000 KM) | | | | |
| 40,000 MI (64,000 KM) | | | | |
| 45,000 MI (72,000 KM) | | | | |
| 50,000 MI (80,000 KM) | | | | |

## Service Literature

Refer to Service Literature: 2008 FLHTCUSE3. Visit any Harley-Davidson dealer or go to www.harley-davidson.com to purchase a service or parts manual for your motorcycle. Factory authorized manuals are the most complete and detailed source of information outside of your Harley-Davidson dealer.

**Service Literature: 2008 FLHTCUSE3**

| DOCUMENT | LANGUAGE | PART NUMBER |
|---|---|---|
| Touring Models Service Manual | English | 99483-08 |
| FLHTCUSE3 Service Manual Supplement | English | 99500-08 |
| FLHTCUSE3 Service Manual Supplement | French | 99500-08F |
| FLHTCUSE3 Service Manual Supplement | German | 99500-08G |
| FLHTCUSE3 Service Manual Supplement | Spanish | 99500-08S |
| FLHTCUSE3 Service Manual Supplement | Italian | 99500-08I |
| Touring Models Electrical Diagnostics Manual | English | 99497-08 |
| Touring Models Service and Electrical Diagnostics Manual | French | 99483-08F |
| Touring Models Service and Electrical Diagnostics Manual | German | 99483-08G |
| Touring Models Service and Electrical Diagnostics Manual | Spanish | 99483-08S |
| Touring Models Service and Electrical Diagnostics Manual | Italian | 99483-08I |
| FLHTCUSE3 Parts Catalog | English | 99428-08 |

## H-D Michigan, Inc. Trademark Information

Harley, Harley-Davidson, H-D, Bar & Shield, Digital Tech, Digital Technician, Destroyer, Deuce, Dyna, Electra Glide, Evolution, Fat Boy, Glaze, Gloss, H-D, H-Dnet.com, HD, Harley, Heritage Softail, Heritage Springer, Low Rider, Night Rod, Night Train, Profile, Revolution, Road Glide, Road King, Rocker, Softail, Sportster, Sun Ray, Sunwash, Tech Link, Twin Cam 88, Twin Cam 88B, Twin Cam 96, Twin Cam 96B, Twin Cam 103, Twin Cam 103B, Twin Cam 110, Twin Cam 110B, Tour-Pak, Screamin' Eagle, Softail, Super Guide, Super Premium, SYN3, Ultra Glide, V-Rod, VRSC, Wide Glide, and Harley-Davidson Genuine Motor Parts and Genuine Motor Accessories are among the trademarks of H-D Michigan, Inc.