Safety First

Safe Operating Rules: Softail Models

⚠WARNING

Motorcycles are different from other vehicles. They operate, steer, handle and brake differently. Unskilled or improper use could result in loss of control, death or serious injury. (00556c)

- Take a rider training course.
- Read Owner's Manual before riding, adding accessories or servicing.
- Wear a helmet, eye protection and protective clothing.
- Never tow a trailer.

Before operating your new motorcycle it is your responsibility to read and follow the operating and maintenance instructions in this manual, and follow these basic rules for your personal safety.

- Know and respect the rules of the road (see RULES OF THE ROAD section). Carefully read and observe the rules contained in the RIDING TIPS booklet accompanying this Owner's Manual. Read and familiarize yourself with the contents of the MOTORCYCLE HANDBOOK for your state.
- Before starting engine, check for proper operation of brake, clutch, shifter, throttle controls, correct fuel and oil supply.

⚠WARNING

Do not use aftermarket parts and custom made front forks which can adversely affect performance and handling. Removing or altering factory installed parts can adversely affect performance and could result in death or serious injury. (00001a)

- Use only Harley-Davidson approved parts and accessories. Use of certain other manufacturer's performance parts will void your new motorcycle warranty. See your Harley-Davidson dealer for details.

⚠WARNING

Stop the engine when refueling or servicing the fuel system. Do not smoke or allow open flame or sparks near gasoline. Gasoline is extremely flammable and highly explosive, which could result in death or serious injury. (00002a)

When refueling your motorcycle, the following rules should be observed.

- Refuel in a well ventilated area with the engine turned off.
- Remove fuel filler cap slowly.
- Do not smoke or allow open flames or sparks when refueling or servicing the fuel system.
- Do not fill fuel tank above the bottom of the filler neck insert.
- Leave air space to allow for fuel expansion.

⚠WARNING

Do not store motorcycle with gasoline in tank within the home or garage where open flames, pilot lights, sparks or electric motors are present. Gasoline is extremely flammable and highly explosive, which could result in death or serious injury. (00003a)

⚠WARNING

Engine exhaust from this product contains chemicals known to the State of California to cause cancer, and birth defects or other reproductive harm. (00004f)

⚠WARNING

Do not run motorcycle in a closed garage or confined area. Inhaling motorcycle exhaust, which contains poisonous carbon monoxide gas, could result in death or serious injury. (00005a)

⚠WARNING

The jiffy stand locks when placed in the full forward (down) position with vehicle weight on it. If the jiffy stand is not in the full forward (down) position with vehicle weight on it, the vehicle can fall over which could result in death or serious injury. (00006a)

⚠WARNING

Be sure jiffy stand is fully retracted before riding. If jiffy stand is not fully retracted, it can contact the road surface causing a loss of vehicle control, which could result in death or serious injury. (00007a)

- A new motorcycle must be operated according to the special break-in procedure. See Break-in Riding Rules.
- Operate motorcycle only at moderate speed and out of traffic until you have become thoroughly familiar with its operation and handling characteristics under all conditions.

NOTE:

We recommend that you obtain information and formal training in the correct motorcycle riding technique. In the United States, the Motorcycle Safety Foundation® offers beginning and

advanced rider safety courses. Call (949)727-3227 for information.

⚠WARNING

Travel at speeds appropriate for road and conditions and never travel faster than posted speed limit. Excessive speed can cause loss of vehicle control, which could result in death or serious injury. (00008a)

- Do not exceed the legal speed limit or drive too fast for existing conditions. Always reduce speed when poor driving conditions exist. High speed increases the influence of any other condition affecting stability and increases the possibility of loss of control.
- Pay strict attention to road surfaces and wind conditions. Any two wheeled vehicle may be subject to upsetting forces such as wind blasts from passing trucks, holes in the pavement, rough road surfaces, rider control error, etc. These forces may influence the handling characteristics of your motorcycle. If this happens, reduce speed and guide the motorcycle with a relaxed grip to a controlled condition. Do not brake abruptly or force the handlebar. This may aggravate an unstable condition.
- Keep cargo weight concentrated close to the motorcycle and as low as possible to minimize the change in the motorcycle's center of gravity. Distribute weight evenly on both sides of the vehicle and do not load bulky items too far behind the rider or add weight to the handlebars or front forks. Do not exceed maximum specified load in each saddlebag.

NOTE:

New riders should gain experience under various conditions while driving at moderate speeds.

- Operate your motorcycle defensively. Remember, a motorcycle does not afford the same protection as an automobile in an accident. One of the most common accident situations occurs when the driver of the other vehicle fails to see or recognize a motorcycle and turns into the on-coming motorcyclist. Operate only with headlamp on.
- Wear an approved helmet, clothing, and foot gear suited for motorcycle riding. Bright or light colors are best for greater visibility in traffic, especially at night. Avoid loose, flowing garments and scarves.

⚠WARNING

Avoid contact with exhaust system and wear protective clothing that completely covers legs while riding. Exhaust pipes and mufflers get very hot when engine is running and remain too hot to touch, even after engine is turned off. Failure to wear protective clothing could result in burns or other serious injury. (00009a)

- When carrying passengers, it is your responsibility to instruct them on proper riding procedures. (See Riding Tips booklet included in your Harley-Davidson Owner's Kit.)

- Do not allow other individuals, under any circumstances, to operate your motorcycle unless you know they are experienced, licensed riders and are thoroughly familiar with the operation of your particular motorcycle.

- Protect your motorcycle against theft. After parking your motorcycle, lock the steering head and remove ignition key from switch. Set security alarm if present.
- Safe motorcycle operation requires alert mental judgment combined with a defensive driving

attitude. Do not allow fatigue, alcohol or drugs to endanger your safety or that of others.

- Vehicles equipped with a sound system should have the volume adjusted to a nondistracting level before operating vehicle.
- Maintain your motorcycle in proper operating condition in accordance with Regular Service Intervals: 2009 FXSTSSE3. Particularly important to motorcycle stability is proper tire inflation pressure, tread condition, and proper adjustment of wheel bearings and steering head bearings.

⚠WARNING

Do not operate vehicle with forks locked. Locking the forks restricts the vehicle's turning ability, which could result in death or serious injury. (00035a)

⚠WARNING

Perform the service and maintenance operations as indicated in the regular service interval table. Lack of regular maintenance at the recommended intervals can affect the safe operation of your motorcycle, which could result in death or serious injury. (00010a)

⚠WARNING

Do not operate motorcycle with loose, worn or damaged steering or suspension systems. Contact a Harley-Davidson dealer for repairs. Loose, worn or damaged steering or suspension components can adversely affect stability and handling, which could result in death or serious injury. (00011a)

⚠WARNING

Regularly inspect shock absorbers and front forks. Replace leaking, damaged or worn parts that can adversely affect stability and handling, which could result in death or serious injury. (00012a)

⚠WARNING

Use Harley-Davidson replacement fasteners. Aftermarket fasteners can adversely affect performance, which could result in death or serious injury. (00013a)

- See a Harley-Davidson service manual for proper torque values.
- Aftermarket fasteners may not have the specific property requirements to perform properly.

⚠WARNING

Be sure tires are properly inflated, balanced and have

adequate tread. Inspect your tires regularly and see a Harley-Davidson dealer for replacements. Riding with excessively worn, unbalanced or under-inflated tires can adversely affect stability and handling, which could result in death or serious injury. (00014a)

⚠WARNING

Replace punctured or damaged tires. In some cases, small punctures in the tread area may be repaired from within the demounted tire by a Harley-Davidson dealer. Speed should NOT exceed 50 mph (80 km/h) for the first 24 hours after repair, and the repaired tire should NEVER be used over 80 mph (130 km/h). Failure to follow this warning could result in death or serious injury. (00015a)

⚠WARNING

Do not exceed the motorcycle's Gross Vehicle Weight Rating (GVWR) or Gross Axle Weight Rating (GAWR). Exceeding these weight ratings can affect stability and handling, which could result in death or serious injury. (00016e)

- GVWR is the sum of the weight of the motorcycle, accessories, and the maximum weight of the rider, passenger and cargo that can be safely carried.
- GAWR is the maximum amount of weight that can be safely carried on each axle.
- The GVWR and GAWR are shown on the information plate, located on the frame down tube.

⚠WARNING

Do not tow a disabled motorcycle. Towing can adversely affect stability and handling, which could result in death or serious injury. (00017a)

⚠WARNING

Do not pull a trailer with a motorcycle. Pulling a trailer can cause tire overload, reduced braking efficiency and adversely affect stability and handling, which could result in death or serious injury. (00018b)

⚠CAUTION

Direct contact of D.O.T. 4 brake fluid with eyes can cause irritation. Avoid eye contact. In case of eye contact flush with large amounts of water and get medical attention. Swallowing large amounts of D.O.T. 4 brake fluid can cause digestive discomfort. If swallowed, obtain medical attention. Use in well ventilated area. KEEP OUT OF

REACH OF CHILDREN. (00240a)

⚠WARNING

Batteries, battery posts, terminals and related accessories contain lead and lead compounds, and other chemicals known to the State of California to cause cancer, and birth defects or other reproductive harm. Wash hands after handling. (00019e)

⚠WARNING

Wheel weights on wheels without spokes contain lead and lead compounds, chemicals known to the State of California to cause cancer, and birth defects or other reproductive harm. (00356d)

⚠WARNING

Consult a Harley-Davidson dealer regarding any questions or problems that occur in the operation of your motorcycle. Failure to do so can aggravate an initial problem, cause costly repairs, cause an accident and could result in death or serious injury. (00020a)

- Be sure all equipment required by federal, state and local law is installed and in good operating condition.

Rules of the Road

- Always sound your horn, actuate your turn signals, and exercise caution when passing other vehicles going in the same direction. Never try to pass another vehicle going in the same direction at street intersections, on curves, or when going up or down a hill.
- At street intersections give the right-of-way. Do not presume you have the right-of-way, as the other driver may not know it is your turn.
- Always signal when preparing to stop, turn or pass.
- All traffic signs, including those used for the control of traffic at intersections, should be obeyed promptly. SLOW DOWN signs near schools and CAUTION signs at railroad crossings should always be observed and your actions governed accordingly.
- When intending to turn, signal at least 100 feet 30.5 meters before reaching the turning point. If turning across an intersection, move over to the centerline of the street (unless local rules require otherwise). Slow down when entering the intersection and turn carefully.
- Never anticipate a traffic light. When a change is indicated from GO to STOP (or vice versa) in the traffic control systems at intersections, slow down and wait for the light to change. Never run through a yellow or red traffic light.
- While turning either right or left, watch for pedestrians, animals, as well as vehicles.
- Do not leave the curb or parking area without signaling. Be sure your way is clear to enter moving traffic. A moving line of traffic always has the right-of-way.
- Be sure your license plate is installed in the position specified by law and is clearly visible at all times. Keep the plate clean.
- Ride at a safe speed that is consistent with the type of highway you are on. Pay strict

attention to whether the road is dry, oily, icy or wet.
- Watch for debris such as leaves or loose gravel.
- Weather and traffic conditions on the highway dictate adjusting your speed and driving habits accordingly.

Accessories and Cargo

Harley-Davidson Motor Company cannot test and make specific recommendations concerning every accessory or combination of accessories sold. Therefore, the rider must be responsible for safe operation of the motorcycle when installing accessories or carrying additional weight.

⚠WARNING

See the Accessory and Cargo section in your Owner's Manual. Improper loading of cargo or installation of accessories can affect motorcycle stability and handling, which could result in death or serious injury. (00021a)

⚠WARNING

Do not exceed the motorcycle's Gross Vehicle Weight Rating (GVWR) or Gross Axle Weight Rating (GAWR). Exceeding these weight ratings can affect stability and handling, which could result in death or serious injury. (00016e)

- GVWR is the sum of the weight of the motorcycle, accessories, and the maximum weight of the rider, passenger and cargo that can be safely carried.
- GAWR is the maximum amount of weight that can be safely carried on each axle.
- The GVWR and GAWR are shown on the information plate which is located on the frame down tube.

⚠WARNING

Do not pull a trailer with a motorcycle. Pulling a trailer can cause tire overload, reduced braking efficiency and adversely affect stability and handling, which could result in death or serious injury. (00018b)

Accessory and Cargo Guidelines

The following guidelines should be used when equipping a motorcycle, carrying passengers and/or cargo.

⚠WARNING

Travel at speeds appropriate for road and conditions and never travel faster than posted speed limit. Excessive speed can cause loss of vehicle control, which could

result in death or serious injury. (00008a)

- Do not exceed the legal speed limit or drive too fast for existing conditions. Always reduce speed when poor driving conditions exist. High speed increases the influence of any other condition affecting stability and increases the possibility of loss of control.
- Pay strict attention to road surfaces and wind conditions. Any two wheeled vehicle may be subject to upsetting forces such as wind blasts from passing trucks, holes in the pavement, rough road surfaces, rider control error, etc. These forces may influence the handling characteristics of your motorcycle. If this happens, reduce speed and guide the motorcycle with a relaxed grip to a controlled condition. Do not brake abruptly or force the handlebar. This may aggravate an unstable condition.
- Keep cargo weight concentrated close to the motorcycle and as low as possible. This minimizes the change in the motorcycle's center of gravity.
- Distribute weight evenly on both sides of the vehicle.
- Do not load bulky items too far behind the rider or add weight to the handlebars or front forks.
- Do not exceed maximum specified load in each saddlebag.
- Luggage racks are designed for lightweight items. Do not overload racks.
- Be sure cargo is secure and will not shift while riding and recheck the cargo periodically. Accessories that change the operator's riding position may increase reaction time and affect handling of the motorcycle.
- Additional electrical equipment may overload the motorcycle's electrical system possibly resulting in electrical system and/or component failure.

⚠WARNING

The front and/or rear guard(s) can provide limited leg and cosmetic vehicle protection under unique circumstances. (Fall over while stopped, very slow speed slide.) It is not made or intended to provide protection from bodily injury in a collision with another vehicle or any other object. (00022a)

Large surfaces such as fairings, windshields, back rests, and luggage racks can adversely affect handling. Only genuine Harley-Davidson items designed specifically for the motorcycle model should be used with proper installation.

⚠WARNING

Do not use aftermarket parts and custom made front forks which can adversely affect performance and handling. Removing or altering factory installed parts can adversely affect performance and could result in death or serious injury. (00001a)

⚠WARNING

Only Touring Harley-Davidson Motorcycles are suitable for sidecar use. Consult a Harley-Davidson dealer. Use of motorcycles other than Touring models with sidecars could result in death or serious injury. (00040a)

Tampering

Owners are warned that removal or replacement of any noise control system component may be prohibited by law. This prohibition applies prior to vehicle sale or delivery to the ultimate purchaser. Use of a vehicle on which noise control system components have been removed or rendered inoperative may also be prohibited by law.

Identification

Vehicle Identification Number (VIN): FXSTSSE3

General

See V.I.N. Stamping Location. The full 17-digit serial or Vehicle Identification Number (VIN) is stamped on the steering head and on a label located on the right front frame down tube.

See Typical Harley-Davidson V.I.N.: 2009 FXSTSSE3 Models. A unique VIN is found on each motorcycle. For a description of each item in the VIN, refer to Harley-Davidson V.I.N. Breakdown: 2009 FXSTSSE3 Models.

Abbreviated VIN

An abbreviated VIN showing the vehicle model, engine type, model year, and sequential number is stamped on the left side of the crankcase below the engine cylinders.

Example: PT99111000

NOTE:

Always give the full 17-digit Vehicle Identification Number when ordering parts or making any inquiry about your motorcycle.

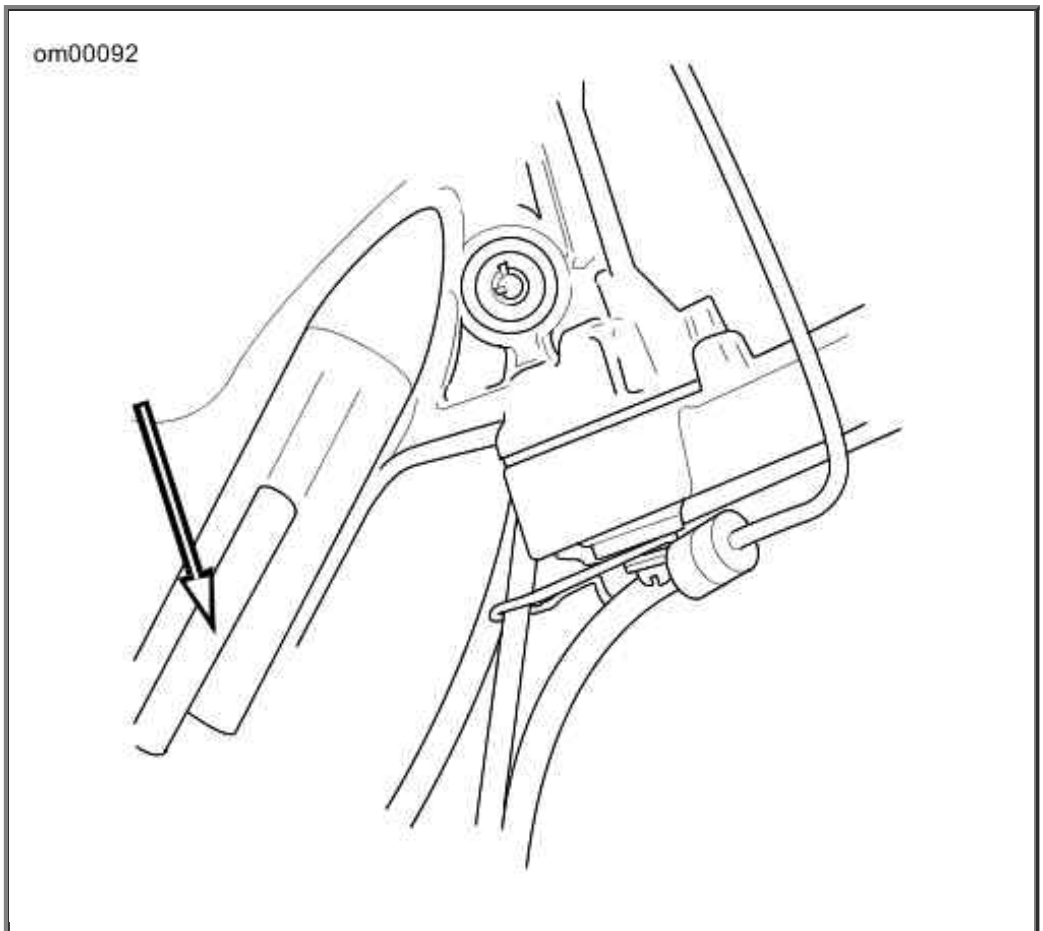

V.I.N. Stamping Location

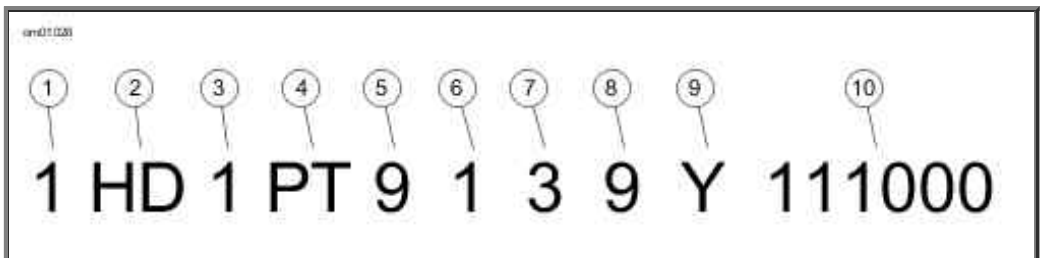

Typical Harley-Davidson V.I.N.: 2009 FXSTSSE3 Models

Harley-Davidson V.I.N. Breakdown: 2009 FXSTSSE3 Models

POSITION	DESCRIPTION	POSSIBLE VALUES
1	Market designation	1=Originally manufactured for sale **within** the United States 5=Originally manufactured for sale **outside** of the United States
2	Manufacturer	HD=Harley-Davidson
3	Motorcycle type	1=Heavyweight motorcycle (901 cc or larger)
4	Model	PT=FXSTSSE3 Custom Vehicle Operations Softail® Springer®
5	Engine type	9=110 cu. in. (1800 cc) air-cooled, fuel-injected, balanced
6	Introduction date	1=Regular 2=Mid-year 3=California/regular 4=Cosmetic changes and/or special introductory date 5=California/cosmetic changes and/or special introductory date

		6=California/mid-year
7	V.I.N. check digit	Can be 0-9 or X
8	Model year	9=2009
9	Assembly plant	Y=York, PA U.S.A.
10	Sequential number	varies

Labels

See Labels: FXSTSSE3 for safety and maintenance labels which were on the vehicle when new. If removed, replacement labels may be purchased for your motorcycle. Refer to Labels: FXSTSSE3 for label descriptions.

NOTE:

Some labels may be available in different languages for destinations outside the U.S. See a Harley-Davidson dealer for all labels available for purchase.

Labels: FXSTSSE3

ITEM	PART NO.	DESCRIPTION	LOCATION
1	29127-95B	General warnings	Top of belt guard.
2	15368-01A	Battery warning	On left side of frame above oil tank.
3	72548-08	Fuse block cover	Under seat behind battery.

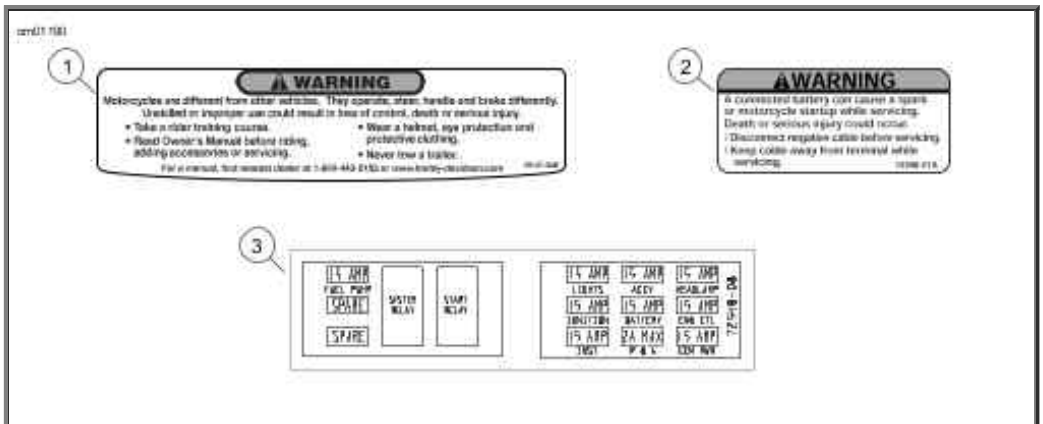

Labels: FXSTSSE3

Specifications

Specifications: 2009 FXSTSSE3

Engine: 2009 Twin Cam 110B™

ITEM	SPECIFICATION
Number of cylinders	2

Type	4-cycle, 45 degree V-Type, air cooled	
Compression ratio	9.15-1	
Bore	4.00 in.	101.60 mm
Stroke	4.38 in.	111.13 mm
Displacement	110 cu. in.	1802 cc
Torque	110 ft-lbs @ 3000 RPM	149 Nm @ 3000 RPM

Ignition System: 2009 FXSTSSE3

COMPONENT	SPECIFICATION	
Ignition timing	Not adjustable	
Battery	12 volt, 19 amp/hr, sealed and maintenance free	
Spark plug type	HD-6R12	
Spark plug size	12 mm	
Spark plug gap	0.038-0.043 in.	0.97-1.09 mm
Spark plug torque	12-18 ft-lbs	16.3-24.4 Nm

Transmission: 2009 Softail Models

TRANSMISSION	SPECIFICATION
Type	Constant mesh, foot shift
Speeds	6 forward

NOTE:

Specifications in this publication may not match those of official certification in some markets due to timing of publication printing, variance in testing methods, and/or vehicle differences. Customers seeking officially recognized regulatory specifications for their vehicle should refer to certification documents and/or contact their respective dealer or distributor.

Sprocket Teeth: 2009 FXSTSSE3

DRIVE	ITEM	NUMBER OF TEETH
Primary	Engine	34
	Clutch	46
Final	Transmission	32
	Rear wheel	66

Gear Ratios: 2009 FXSTSSE3

GEAR	RATIO
1st Gear	9.312
2nd Gear	6.421
3rd Gear	4.774
4th Gear	3.926
5th Gear	3.279
6th Gear	2.790

Weights: 2009 FXSTSSE3

ITEM	LB.	KG
Weight as shipped from factory	725	328.8
GVWR	1175.0	532.10
GAWR front	415	188
GAWR rear	760	344.7

NOTE:

Gross Vehicle Weight Rating (GVWR) (maximum allowable loaded vehicle weight) and corresponding Gross Axle Weight Ratings (GAWR) are given on a label located on the frame below the steering head.

Dimensions: 2009 FXSTSSE3

ITEM	IN.	MM
Wheel base	65.2	1656.1
Overall length	91.6	2326.64
Overall width	36.31	922.3
Road clearance	4.65	118.11
Overall height	43.3	1100.8
Saddle height*	25.5	647.7
*With 180 lb. 82 kg rider on seat		

Capacities: 2009 FXSTSSE3

ITEM	U.S.	LITERS
Fuel tank (total)	5.0 gal	18.9
Low fuel warning light on	1.0 gal	3.8
Oil tank with filter	3.5 qt.	3.31
Transmission (approximate)	1.0 qt.	0.95

Primary chaincase (approximate)	1.0 qt.	0.95

Tire Pressures: 2009 FXSTSSE3

LOAD	TIRE PRESSURE (COLD)			
	FRONT		REAR	
	PSI	kPa	PSI	kPa
Solo Rider	36	248	38	262
Rider and Passenger	36	248	42	290

Tire Sizes: 2009 FXSTSSE3

MOUNT	SIZE	NUMBER
Front	18 in.	D407F 130/70R18
Rear	18 in.	D407 240/55R18
2009 motorcycles use Dunlop Harley-Davidson tires only.		

Bulb Chart: 2009 FXSTSSE3

LAMP	DESCRIPTION (ALL LAMPS 12 VOLT)	BULBS REQUIRED	CURRENT DRAW (AMPERAGE)		H-D PART NUMBER
Headlamp	high beam/low beam	1	4.3		68329-03
	position lamp international	1	0.32		53436-97
Turn signal lamp	front/running	2	2.25	0.59	68168-89A
	front international	2	1.75		68163-84
	rear	2	2.25		68572-64B
	rear international	2	1.75		68163-84
Instrument panel lamps	high beam indicator	1	0.08		69870-07
	oil pressure indicator	1	0.08		69872-07
	neutral indicator	1	0.08		69871-07
	right turn signal indicator	1	0.08		69896-07
	left turn signal indicator	1	0.08		69869-07
Tail and stop lamp	tail lamp	Illuminated with LEDs. Replace entire assembly upon failure.			
	stop lamp				
	tail lamp international				

	stop lamp international	

Tire Data

⚠WARNING

Match tires, tubes, air valves and caps to the correct wheel rim. Contact a Harley-Davidson dealer. Mismatching can result in damage to the tire bead, allow tire slippage on the rim or cause tire failure, which could result in death or serious injury. (00023a)

⚠WARNING

Use only Harley-Davidson approved tires. See a Harley-Davidson dealer. Using non-approved tires can adversely affect stability, which could result in death or serious injury. (00024a)

Tubeless tires fitted with the correct size inner tubes may be used on all Harley-Davidson laced (wire spoked) wheels. Protective rubber rim strips must be used with tubeless tires (fitted with correct size inner tubes) when mounted on laced (wire spoked) wheels.

⚠WARNING

Use inner tubes on laced (wire spoked) wheels. Using tubeless tires on laced wheels can cause air leaks, which could result in death or serious injury. (00025a)

Tubeless tires are used on all Harley-Davidson cast and disc wheels.

Tire sizes are molded on the tire sidewall. Inner tube sizes are printed on the tube.

⚠WARNING

Harley-Davidson front and rear tires are not the same. Interchanging front and rear tires can cause tire failure, which could result in death or serious injury. (00026a)

⚠WARNING

Do not inflate tire beyond maximum pressure as specified on sidewall. Over inflated tires can blow out, which could result in death or serious injury. (00027a)

⚠WARNING

Harley-Davidson tires are equipped with wear bars that run horizontally across the tread. When wear bars become visible and only 1/32 in. (0.8 mm) tread depth remains, replace tire immediately. Using a worn tire can adversely affect stability and handling, which could result in death or serious injury. Use only Harley-Davidson approved replacement tires. (00090b)

See Specifications: 2009 FXSTSSE3 for tire pressures and sizes.

Gasoline Blends

Your motorcycle was designed to get the best performance and efficiency using unleaded gasoline. Most gasoline is blended with alcohol and/or ether to create oxygenated blends. The type and amount of alcohol or ether added to the fuel is important.

CAUTION

Do not use gasoline that contains methanol. Doing so can result in fuel system component failure, engine damage and/or equipment malfunction. (00148a)

- Gasoline containing METHYL TERTIARY BUTYL ETHER (MTBE): Gasoline/MTBE blends are a mixture of gasoline and as much as 15% MTBE. Gasoline/MTBE blends can be used in your motorcycle.
- ETHANOL is a mixture of 10% ethanol (Grain alcohol) and 90% unleaded gasoline. Gasoline/ethanol blends can be used in your motorcycle if the ethanol content does **not** exceed 10%.
- REFORMULATED OR OXYGENATED GASOLINES (RFG): Reformulated gasoline is a term used to describe gasoline blends that are specifically designed to burn cleaner than other types of gasoline, leaving fewer tailpipe emissions. They are also formulated to evaporate less when you are filling your tank. Reformulated gasolines use additives to oxygenate the gas. Your motorcycle will run normally using this type of gas and Harley-Davidson recommends you use it when possible, as an aid to cleaner air in our environment.
- Do not use race gas or octane boosters. Use of these fuels will damage the fuel system.

Some gasoline blends might adversely affect the starting, driveability or fuel efficiency of the motorcycle. If any of these problems are experienced, try a different brand of gasoline or gasoline with a higher octane blend.

Fuel

Refer to Octane Ratings. Always use a good quality unleaded gasoline. Octane ratings are usually found on the pump.

⚠WARNING

Avoid spills. Slowly remove filler cap. Do not fill above bottom of filler neck insert, leaving air space for fuel expansion. Secure filler cap after refueling. Gasoline is

extremely flammable and highly explosive, which could result in death or serious injury. (00028a)

⚠WARNING

Use care when refueling. Pressurized air in fuel tank can force gasoline to escape through filler tube. Gasoline is extremely flammable and highly explosive, which could result in death or serious injury. (00029a)

Modern service station pumps dispense a high flow of gasoline into a motorcycle fuel tank making air entrapment and pressurization a possibility.

Octane Ratings

SPECIFICATION	RATING
Pump Octane (R+M)/2	91 (95 RON)

Catalytic Converters: FXSTSSE3

All FXSTSSE3 motorcycles are equipped with catalytic converters.

CAUTION

Do not operate catalytic converter-equipped vehicle with engine misfire or a non-firing cylinder. If you operate the vehicle under these conditions, the exhaust will become abnormally hot, which can cause vehicle damage, including emission control loss. (00149a)

CAUTION

Use only unleaded fuel in catalytic converter-equipped motorcycles. Using leaded fuel will damage the emission control system. (00150b)

Controls and Indicators

General: Controls and Indicators

⚠WARNING

Read the CONTROLS AND INDICATORS section before riding your motorcycle. Failure to understand the operation of the motorcycle could result in death or serious injury. (00043a)

Some features explained are unique to certain models. These features may be available as accessories for your Harley-Davidson motorcycle. See a Harley-Davidson dealer for a complete list of accessories that will fit your specific motorcycle.

Ignition/Headlamp Key Switch: FXSTSSE3

General

⚠WARNING

The automatic-on headlamp feature provides increased visibility of the rider to other motorists. Be sure headlamp is on at all times. Poor visibility of rider to other motorists can result in death or serious injury. (00030b)

See Ignition/Headlamp Key Switch: FXSTSSE3. The ignition/headlamp key switch controls electrical functions of the motorcycle.

See the YOUR OWNER'S MANUAL section at the beginning of this manual. Be sure to record all your key numbers in the space provided at the front of this book.

CAUTION

Protect your vehicle against theft. After parking your motorcycle, lock the steering head and remove ignition key from switch. Failure to lock your motorcycle may result in theft and/or equipment damage. (00151a)

CAUTION

Do not lubricate barrel locks with petroleum based lubricants or graphite. Inoperative locks may result. (00152a)

Lock/Unlock Switch

When the ignition/headlamp switch is locked, it cannot be rotated to a different position. The ignition switch can only be locked in the OFF or ACC position. The switch cannot be locked in the IGNITION position.

Always turn switch to OFF position, lock the switch, and remove the key after operation or when leaving the motorcycle parked.

1. Lift the switch cover.
2. See Ignition/Headlamp Key Switch: FXSTSSE3. Insert the key and turn counterclockwise to lock the switch. To unlock the switch, turn the key clockwise.
3. Remove the key and close the switch cover.

NOTES:

Harley-Davidson recommends removing key from ignition/headlamp key switch and fork lock before operating motorcycle. If you do not remove key, it can fall out during operation.

The key can be removed while the switch is in any position.

Selecting Switch Position

See Ignition/Headlamp Key Switch: FXSTSSE3. After the switch has been unlocked, it can be rotated to any position.

Refer to Ignition/Headlamp Switch Positions: FXSTSSE3 for ignition/headlamp key switch operation.

NOTE:

The lamps illuminate when the switch is in the IGNITION position, as required by law in some localities.

Ignition/Headlamp Switch Positions: FXSTSSE3

FUNCTION	OPERATION
IGN	When switch is in IGNITION position, the motorcycle can be started and all lamps and accessories will operate.*
OFF	When switch is in OFF position, the ignition, lamps and accessories are off. The switch can be locked in the OFF position.
ACC	When switch is in ACCESSORY position, all the accessories and instrument lamps will operate but the engine cannot be started. Brake lamp and horn can be activated. The switch can be locked while in the ACCESSORY position.*
*International models have an additional function - position lamp and tail lamp are also on.	

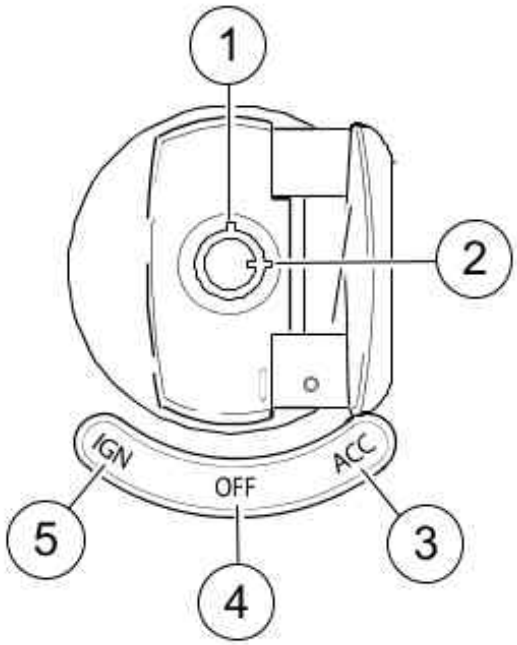

1. Lock position
2. Unlock position
3. Accessory
4. Off
5. Ignition

Ignition/Headlamp Key Switch: FXSTSSE3

Hand Controls: Basic Operation

Electric Starter Switch

NOTE:

Off/Run switch MUST be in RUN position to operate engine.

See Handlebar Controls. The electric starter switch is located on the right handlebar control group. See Starting the Engine for detailed operation procedures.

1. Put the engine off/run switch in the RUN position and the transmission in neutral. Neutral (green) indicator lamp should be illuminated.

2. See Ignition/Headlamp Key Switch: FXSTSSE3. Turn ignition/headlamp key switch to IGNITION and push the START switch to operate starter motor.

Engine OFF/RUN Switch

See Handlebar Controls. The engine off/run switch (7) turns the ignition power ON or OFF. The engine off/run switch is located on the right handlebar control. Push the top portion of the engine off/run switch to turn off ignition power and shut the engine off. Push the bottom portion of the engine off/run switch to turn on ignition power.

NOTES:

- *The engine off/run switch must be in the RUN position to start or operate the engine.*

- *The engine off/run switch should be used to shut the engine off.*

1. To shut the engine off, push the top of the off/run switch to the ignition OFF position.
2. See Ignition/Headlamp Key Switch: FXSTSSE3. Turn the ignition key to the OFF position to turn the ignition power completely OFF.

Throttle Control Grip

See Handlebar Controls. The throttle control grip (9) is located on the right handlebar control and is operated with the right hand.

To reduce rider fatigue on long trips, a spring loaded throttle friction adjustment screw (10) is located at the bottom of the throttle grip clamp on non-cruise equipped models.

1. Slowly turn throttle control grip clockwise (toward the front of the bike) to close the throttle (decelerate).
2. Slowly turn throttle control grip counterclockwise (toward rear of bike) to open the throttle (accelerate).

⚠WARNING

Do not tighten throttle friction adjustment screw to the point where the engine will not return to idle automatically. Over-tightening can lead to loss of vehicle control, which could result in death or serious injury. (00031b)

3. Unscrew the throttle friction adjustment screw so the throttle returns to the idle position when the hand is removed from the grip.
4. Screw the throttle adjustment screw in to increase friction on grip. This provides a damping effect on throttle motion.

NOTE:

The throttle friction adjustment screw should not be used under normal stop and go operating conditions.

Clutch Hand Lever

⚠WARNING

Do not position fingers between hand control lever and handlebar grip. Improper hand positioning can impair control lever operation and cause loss of vehicle control, which could result in death or serious injury. (00032a)

See Handlebar Controls. The clutch hand lever (1) is located on the left handlebar and is operated with the fingers of the left hand.

1. Slowly pull clutch hand lever in against handlebar grip to fully disengage clutch.

2. Shift to first gear using the gear shifter lever. See Gear Shift Lever.
3. Slowly release the clutch hand lever to engage clutch.

A clutch switch is incorporated into the left handlebar switch assembly. It enables the rider to start the vehicle in any gear (or in neutral) as long as the clutch lever is pulled in. If the clutch is not disengaged, the vehicle will not start.

Horn Switch

See Handlebar Controls. The horn is operated by pushing on the horn switch (2) located on the left handlebar control group.

Headlamp Dimmer Switch

See Handlebar Controls. The headlamp dimmer switch (3) is located on the left handlebar. The switch has two positions to activate the headlamps high or low beams.

- Press the top of the headlamp dimmer beam switch to activate the high beam.
- Press the bottom of the headlamp dimmer switch to return to the low beam.

See Indicator Lamps. The (blue) high beam indicator lamp will illuminate when the high beam is on.

Turn Signal Switches

See Handlebar Controls. Each handlebar control group contains a turn signal switch.

- The right turn signal switch (11) operates the right front and right rear flashing lamps.
- The left turn signal switch (4) operates the left front and left rear flashing lamps.

NOTE:

Front turn signal lamps also function as running lamps (except International models).

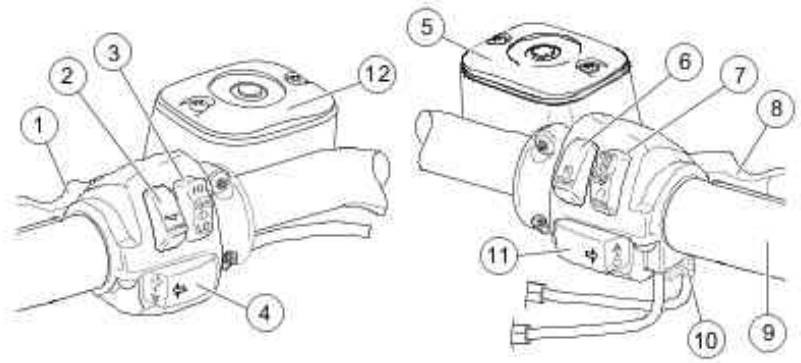

1. Clutch hand lever
2. Horn switch
3. Headlamp dimmer switch
4. Left turn signal switch
5. Front brake master cylinder reservoir
6. Electric starter switch
7. Engine off/run switch
8. Brake hand lever
9. Throttle control grip
10. Throttle friction adjusting screw
11. Right turn signal switch
12. Clutch master cylinder reservoir

Handlebar Controls

Turn Signal Switch Operation

The turn signal switches are used by the turn signal module to control turn signal operation based on vehicle speed, vehicle acceleration and turn completion.

Momentarily depress the desired turn signal switch. The turn signal lamps will begin and continue flashing until they are manually or automatically cancelled. As long as the motorcycle is stationary, the signals will flash.

NOTES:

- *If you are signaling to turn in one direction and you depress the switch for the opposite turn signal, the first signal is cancelled and the opposite side begins flashing.*
- *If you want to stop the lamps from flashing, briefly depress the turn signal switch a second time. The turn signal lamps will stop flashing.*

Hazard Warning

4-Way Flashers

Should it be necessary to park along side a roadway, 4-way flashers can be activated as a hazard warning to traffic.

Activate: Turn the ignition/headlamp key switch to IGNITION and simultaneously press the left and right turn signal switches. The switch can then be turned to the OFF or ACCESSORY position and locked. The flashers will continue for two hours.

Deactivate: Turn the ignition/headlamp key switch to IGNITION and simultaneously press the left and right turn signal switches.

4-Way Flashers with Security System

If it should be necessary to leave the motorcycle parked along side a roadway unattended, the 4-way flashers can be activated and the Harley-Davidson Smart Security System can be armed. See Arming and Disarming.

Indicator Lamps

See Indicator Lamps. Five indicator lamps are provided.

- The green TURN indicators will flash when turn signals are activated; therefore, flashing indicates the chosen turn direction. When the 4-way hazard flashers are operating, both turn indicators will flash simultaneously.
- The blue BEAM indicator lamp, when lit, signals high beam headlamp operation.
- The green NEUTRAL lamp, when lit, signals the transmission is in neutral gear.
- The red OIL indicator lamp, when lit, signals that oil is not circulating through the engine.

NOTE:

The OIL indicator lamp will glow when the ignition is turned on prior to starting engine. With engine running, lamp should be off when engine speed is above idle.

Several other circumstances that could cause the red oil indicator lamp to signal, include the following:

- If the oil pressure indicator lamp does not go off at speeds above idling, it is usually because of an empty oil tank or diluted oil.
- In freezing weather the oil feed may clog with ice and sludge, preventing oil circulation.
- A grounded oil signal switch wire.
- A faulty signal switch.
- A damaged or improperly installed check valve.
- Trouble with the pump.

CAUTION

If the oil pressure indicator lamp remains lit, always check the oil supply first. If the oil supply is normal and the lamp is still lit, stop the engine at once and do not ride further until the trouble is located and the necessary repairs are made. Failure to do so may result in engine damage. (00157a)

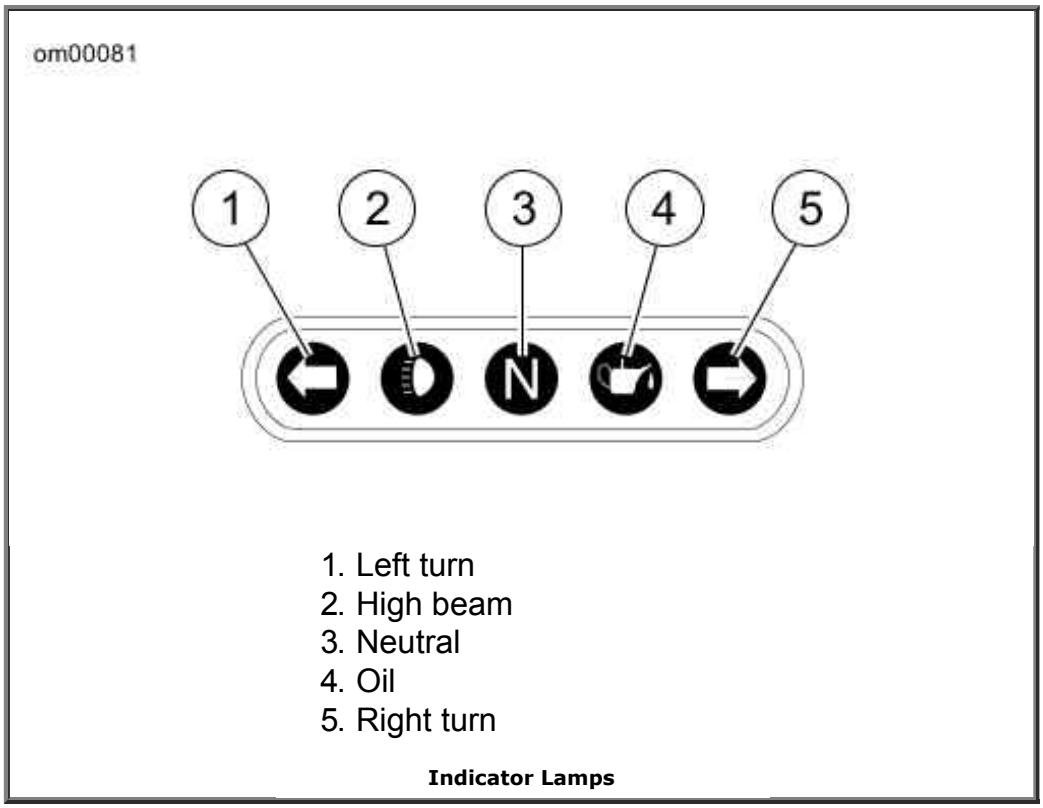

Indicator Lamps

Instruments: FXSTSSE3

Speedometer

WARNING

Travel at speeds appropriate for road and conditions and never travel faster than posted speed limit. Excessive speed can cause loss of vehicle control, which could result in death or serious injury. (00008a)

See Speedometer and Odometer. The speedometer registers miles per hour (MPH) or, on International models, kilometers per hour (KPH).

The speedometer includes a single display window for the odometer, two trip-odometers, tip indicator, and clock.

See Instruments: FXSTSSE3. Press the function button to change the display window on the speedometer face to either odometer, trip-odometer, or clock.

Odometer

See Speedometer and Odometer. The odometer registers the number of miles/kilometers the vehicle has traveled. The odometer can display mileage when the motorcycle is on or off by pressing the function button. There is no need to turn the motorcycle on to check the odometer reading.

Trip Odometer

Use the trip-odometer A or trip-odometer B to register number of miles/kilometers traveled on a trip or between refueling. The ignition/headlamp key switch must be in the IGNITION or ACCESSORY position to view or reset the trip-odometers.

See Speedometer and Odometer. To view the trip-odometer, press the function button until an A or B is displayed in the upper left corner of the odometer window.

To reset a trip-odometer to zero, press the function button to select the trip-odometer to be reset. Press and hold the function button for approximately 2-3 seconds until the trip-odometer resets to zero.

CAUTION

Never attempt to tamper with or alter the vehicle odometer. This is illegal. Tampering with or altering a vehicle odometer may cause equipment damage. (00160a)

Tip Indicator

⚠WARNING

If tip occurs, check all controls for proper operation. Restricted control movement can adversely affect the performance of the brakes, clutch or ability to shift, which could result in loss of vehicle control and death or serious injury. (00350a)

Should motorcycle be tipped over, the word "tip" will appear in the odometer window. Engine will not start until reset. To reset, cycle the ignition/headlamp key switch IGNITION-OFF-IGNITION.

Clock

The clock displays time in a 12-hour or 24-hour format. To view the clock, press the function button until the clock (hour and minutes) displays in the odometer window.

The clock can display time when the motorcycle is on or off by pressing the function button. There is no need to turn the motorcycle on to check the clock.

Setting the Clock

1. Turn the ignition/headlamp key switch to IGNITION or ACCESSORY.
2. See Instruments: FXSTSSE3. Press the function button until the clock (hour and minutes) displays in the odometer window.
3. Press and hold the function button for approximately five seconds until 12HR begins to blink in the odometer window. Release the button.
4. Select 12HR or 24HR (military style) time display by pressing and releasing the function button. When the desired time style is selected, press and hold the function button for

approximately five seconds until the hours display starts blinking.

5. The hour display will advance one hour each time the function button is pressed and released. Press and release the function button repeatedly to select the appropriate hour. When the correct hour is displayed, press and hold the function button until the minutes display starts blinking.

   NOTE:

   There is no AM or PM time setting required. When the correct hour is selected, press and hold the function button to advance to the minutes setting.

6. The minutes display will advance one minute each time the function button is pressed and released. Press and release the function button repeatedly to select the appropriate minutes. When the correct minutes are displayed, press and hold the function button until the minutes display stops blinking. This indicates that the clock has been set.

7. Turn the ignition/headlamp key switch to the OFF position.

Fuel Range Function

The fuel range function shows the approximate mileage available with the amount of fuel left in the tank.

1. With the ignition switch in the ACC or IGNITION position, press function switch until fuel range function is displayed, as indicated by the letter 'r' in the left side of the odometer display. The calculated remaining distance (miles or kilometers) to empty is displayed, based on the amount of fuel in tank. Range can be accessed at any time using the function switch.

2. When the low fuel warning lamp illuminates, the range feature will automatically be displayed in the odometer unless this automatic pop-up feature is disabled by a press and hold of the function switch while in range display mode. Automatic range pop-up feature will show that it is disabled by blinking twice. Likewise, automatic range popup can be reactivated by a press and hold of the function switch. Range will blink once when the automatic pop-up feature is re-enabled.

   NOTES:
   - *When the low fuel warning lamp turns on, there is approximately 1.0 gallon 3.8 liters of fuel remaining in the tank. Refuel as soon as possible.*
   - *The range display is only updated when the vehicle is moving.*

3. After the range calculation reaches 10 miles 16 kilometers remaining, the range display will show "r Low" to indicate that the vehicle will shortly run out of fuel.

4. Resetting the low fuel warning lamp and range requires an ignition cycle change.

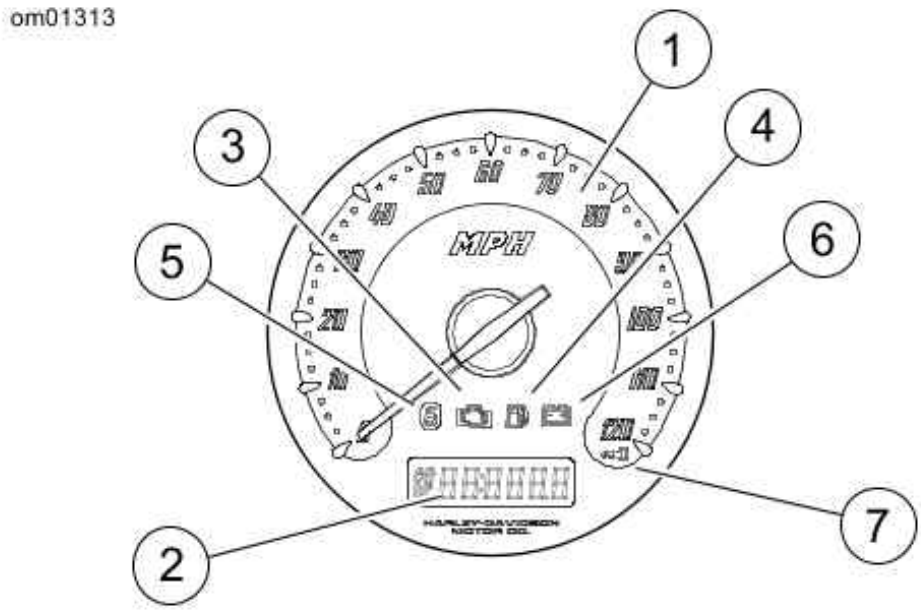

1. Speedometer
2. Odometer/trip odometer/clock
3. Check engine lamp
4. Low fuel warning lamp
5. Sixth gear lamp
6. Battery lamp
7. Security system lamp

Speedometer and Odometer

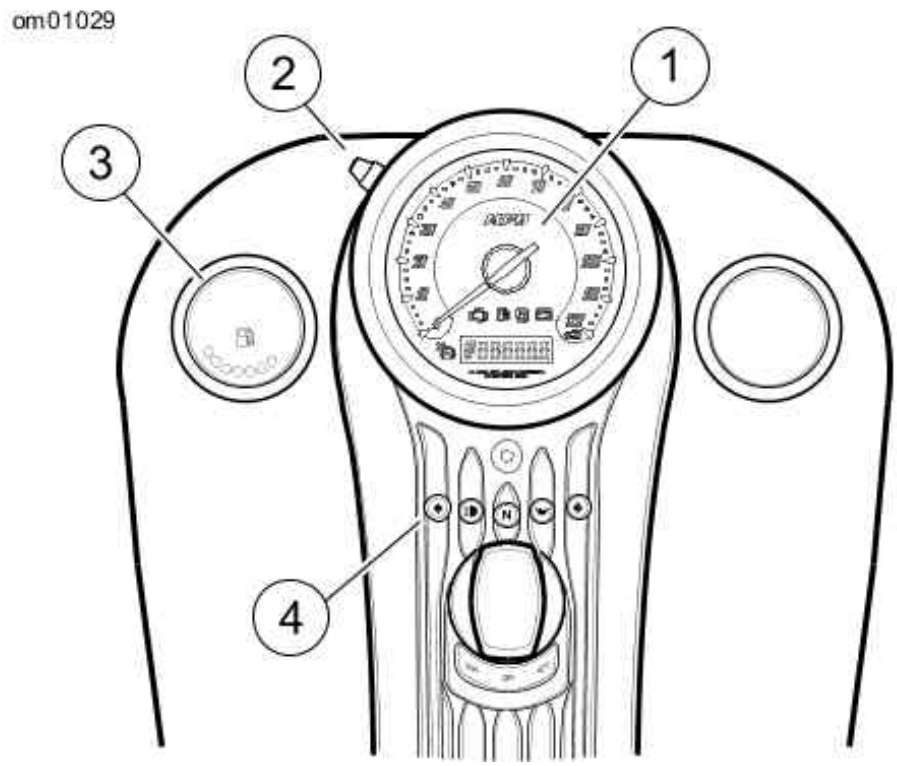

1. Speedometer
2. Function button
3. Fuel gauge
4. Indicator lamps

Instruments: FXSTSSE3

Check Engine Lamp

See Speedometer and Odometer. The engine check lamp is located inside the instrument cluster. Its purpose is to indicate whether or not the engine/engine management system is operating normally. The engine lamp color is red.

The engine lamp normally comes on when the motorcycle's ignition is first turned on and remains on for approximately 4 seconds, as the engine management system runs a series of self-diagnostics.

If the engine lamp comes on at any other time, see a Harley-Davidson dealer.

Low Fuel Lamp

See Speedometer and Odometer. There is a low fuel warning lamp within the instrument cluster. The low fuel lamp lights up to indicate that there is approximately 1.0 gallon 3.8 liters of gasoline left in the tank. The low fuel lamp color is amber.

NOTE:

See Instruments: FXSTSSE3. The gas pump icon located in the fuel gauge is on at all times when the vehicle ignition switch is in the IGNITION position. It is not a low fuel warning lamp.

Gear Shift Lever

CAUTION

The clutch must be fully disengaged before attempting a gear shift. Failure to fully disengage the clutch can result in equipment damage. (00182a)

See Shifting Sequence: Downshift. The gear shift lever is located on the left side of the motorcycle and is operated with the left foot. The transmission is a six speed sequential gear box.

1. Push the gear shift lever all the way down (full stroke) to shift the transmission to the next lower gear.

2. Lift the gear shift lever all the way up (full stroke) to shift the transmission to the next higher gear.

   NOTES:
   - *Release the gear shift lever after each gear change.*
   - *The lever must return to its central position before another gear change can be made.*

First gear is the last gear position that can be found by pushing the gear shift lever full stroke downward.

Neutral is located between first and second gear. The green neutral indicator lamp on the dash will illuminate when the transmission is in neutral.

To shift from first gear to neutral, lift the gear shift lever 1/2 of its full stroke.

When the motorcycle is standing still and the engine is not running, shifting gears requires a different technique. Before shifting in this condition, move the motorcycle backward and forward with the clutch fully disengaged (clutch lever pulled in). While maintaining slight pressure on the shift lever, shift from one gear to another.

Even with the engine running and the motorcycle standing still, difficulty may be experienced in shifting gears. This difficulty occurs because transmission gears are not turning and shifting parts are not lined up to permit engagement.

CAUTION

When difficulty of shifting gears is experienced, do not under any circumstances, attempt to force the shift. The results of such abuse will be a damaged or broken shifter mechanism. (00161a)

See Shifting Gears for more information.

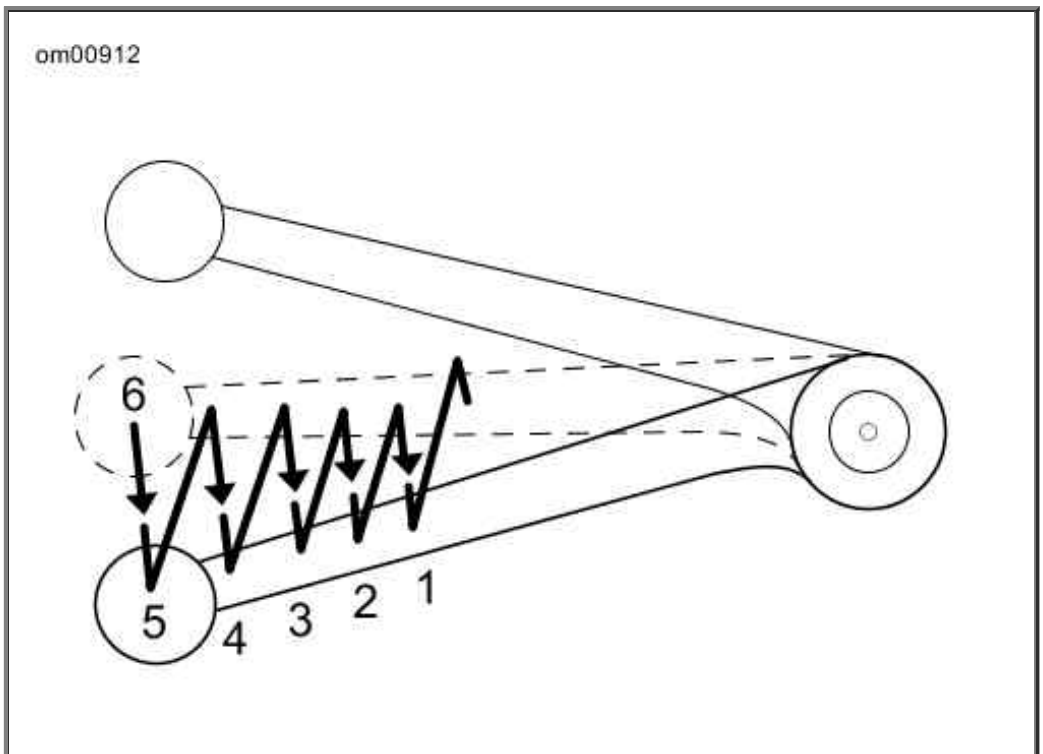

Shifting Sequence: Downshift

Brake System

⚠WARNING

Do not apply brake strongly enough to lock the wheel. A locked wheel will skid and can cause loss of vehicle control, which could result in death or serious injury. (00053a)

The rear brake pedal controls the rear wheel brake and is located on the motorcycle's right side. Operate the rear brake pedal with the right foot.

The front brake hand lever controls the front wheel brake and is located on the right handlebar. Operate the hand lever with the fingers of the right hand.

⚠WARNING

Do not position fingers between hand control lever and handlebar grip. Improper hand positioning can impair control lever operation and cause loss of vehicle control, which could result in death or serious injury. (00032a)

Brakes should be applied uniformly and evenly to prevent wheels from locking up. A balance between rear and front braking is generally best.

Jiffy Stand

⚠WARNING

Always park motorcycle on a level, firm surface. An unbalanced motorcycle can fall over, which could result in death or serious injury. (00039a)

The jiffy stand is located on the left side of the motorcycle and swings outward to support the motorcycle for parking.

⚠WARNING

The jiffy stand locks when placed in the full forward (down) position with vehicle weight on it. If the jiffy stand is not in the full forward (down) position with vehicle weight on it, the vehicle can fall over which could result in death or serious injury. (00006a)

⚠WARNING

Be sure jiffy stand is fully retracted before riding. If jiffy stand is not fully retracted, it can contact the road surface causing a loss of vehicle control, which could result in death or serious injury. (00007a)

Rear View Mirrors

⚠WARNING

Objects in mirrors are closer than they appear. Use caution when judging distance of objects in mirrors. Failure to judge correct distances could result in death or serious injury. (00033a)

Your vehicle is equipped with two convex rear view mirrors.

This type of mirror is designed to give a much wider view to the rear than a flat mirror. However, cars and other objects seen in this type of mirror will look smaller and farther away than they actually are.

- Use caution when judging the size or relative distance of objects seen in rear view mirrors.
- Always adjust the rear view mirrors to clearly reflect the area behind the motorcycle before riding.

NOTE:

Adjust mirrors so you can see a small portion of your shoulders in each mirror. This will help you establish the relative distance of vehicles to the rear of your motorcycle.

Fuel Filler Cap and Fuel Gauge: Flush Mount

See Safe Operating Rules: Softail Models and review safety procedures which follow.

CAUTION

Do not spill fuel onto the motorcycle while refueling. Immediately wipe up fuel spills on your motorcycle. Fuel can cause damage to cosmetic surfaces. (00147b)

CAUTION

Use only unleaded fuel in catalytic converter-equipped motorcycles. Using leaded fuel will damage the emission control system. (00150b)

⚠WARNING

Do not store motorcycle with gasoline in tank within the home or garage where open flames, pilot lights, sparks or electric motors are present. Gasoline is extremely flammable and highly explosive, which could result in death or serious injury. (00003a)

⚠WARNING

Avoid spills. Slowly remove filler cap. Do not fill above bottom of filler neck insert, leaving air space for fuel expansion. Secure filler cap after refueling. Gasoline is extremely flammable and highly explosive, which could result in death or serious injury. (00028a)

⚠WARNING

Do not use aftermarket fuel caps. Aftermarket fuel caps may fit improperly and leak, which could lead to death or serious injury. See a Harley-Davidson dealer for approved fuel caps. (00034a)

NOTE:

Extended exposure of fuel filler cap to rain/washing may cause a small amount of water to collect between the pop-up cap and the threaded body. Simply remove the fuel cap and tilt to drain water. Water cannot flow through the fuel filler cap.

Removing Fuel Filler Cap

See Fuel Tank: FXSTSSE3 and Installing/Removing Fuel Filler Cap: Flush Mount. To remove fuel filler cap, press down on cap and rotate 1/8 turn counterclockwise. Cap will popup and may be unscrewed with counterclockwise rotation.

Installing Fuel Filler Cap

Screw fuel filler cap clockwise into fuel tank threads firmly. Press down on cap and rotate cap 1/8 turn clockwise to lock cap in down position.

NOTE:

There is no ratchet in this fuel cap, so it will not click when you have installed and tightened the cap.

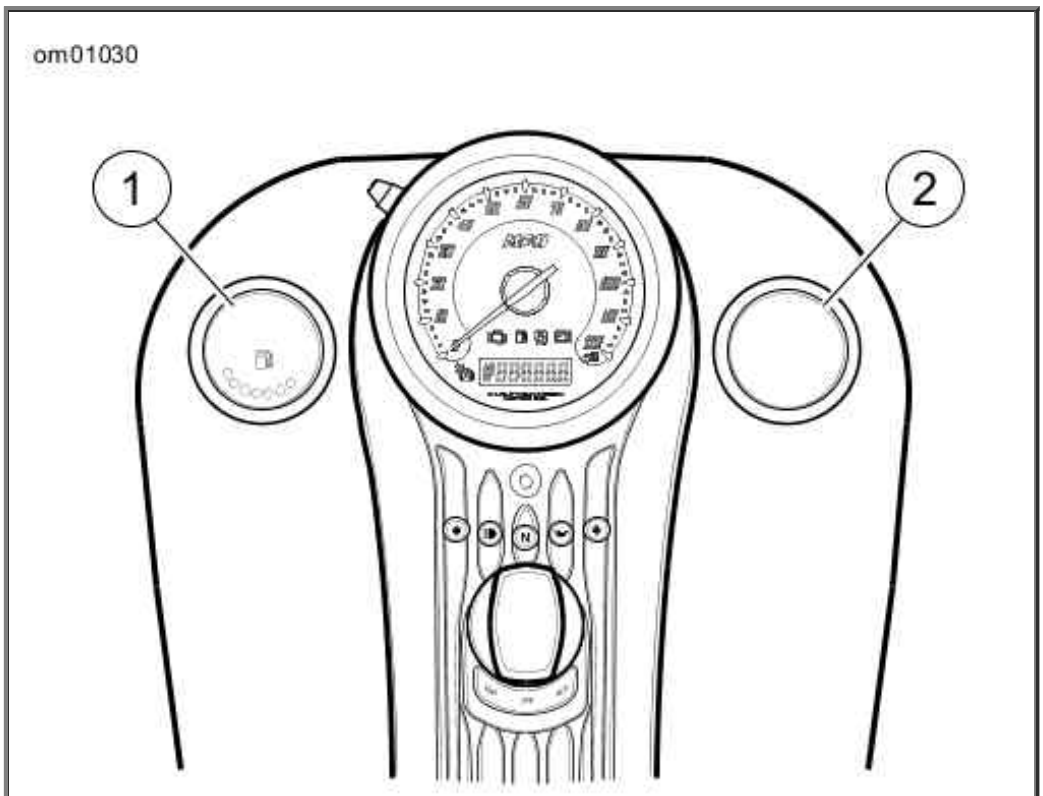

1. Fuel gauge
2. Fuel filler cap

Fuel Tank: FXSTSSE3

Installing/Removing Fuel Filler Cap: Flush Mount

LED Fuel Gauge

See Fuel Tank: FXSTSSE3 and LED Fuel Gauge: Flush Mount. The fuel gauge has seven red LEDs which indicate the amount of fuel in the tank. Refer to LED Fuel Gauge Indication.

NOTES:

- *The fuel gauge is mirror glass. Recommended cleaning is with glass cleaner. Any type of abrasive chrome cleaner could damage the surface and damage surrounding painted surfaces.*
- *The fuel gauge is equipped with a light-sensitive sensor. The sensor causes the fuel gauge to illuminate brighter in lighted conditions.*
- *When the fuel tank has less than 1.0 gallon 3.8 liters of fuel remaining, the low fuel lamp lights in the speedometer.*
- *The gas pump icon on the LED fuel gauge is not a low fuel warning lamp. It will be illuminated at all times when the ignition/headlamp key switch is in the IGNITION position.*

LED Fuel Gauge Indication

NUMBER OF ILLUMINATED LEDS	AMOUNT OF FUEL IN TANK
7	Full
6	5/6 full
5	2/3 full
4	1/2 full
3	1/3 full
2	1/6 full

1	Less than 1/6 full

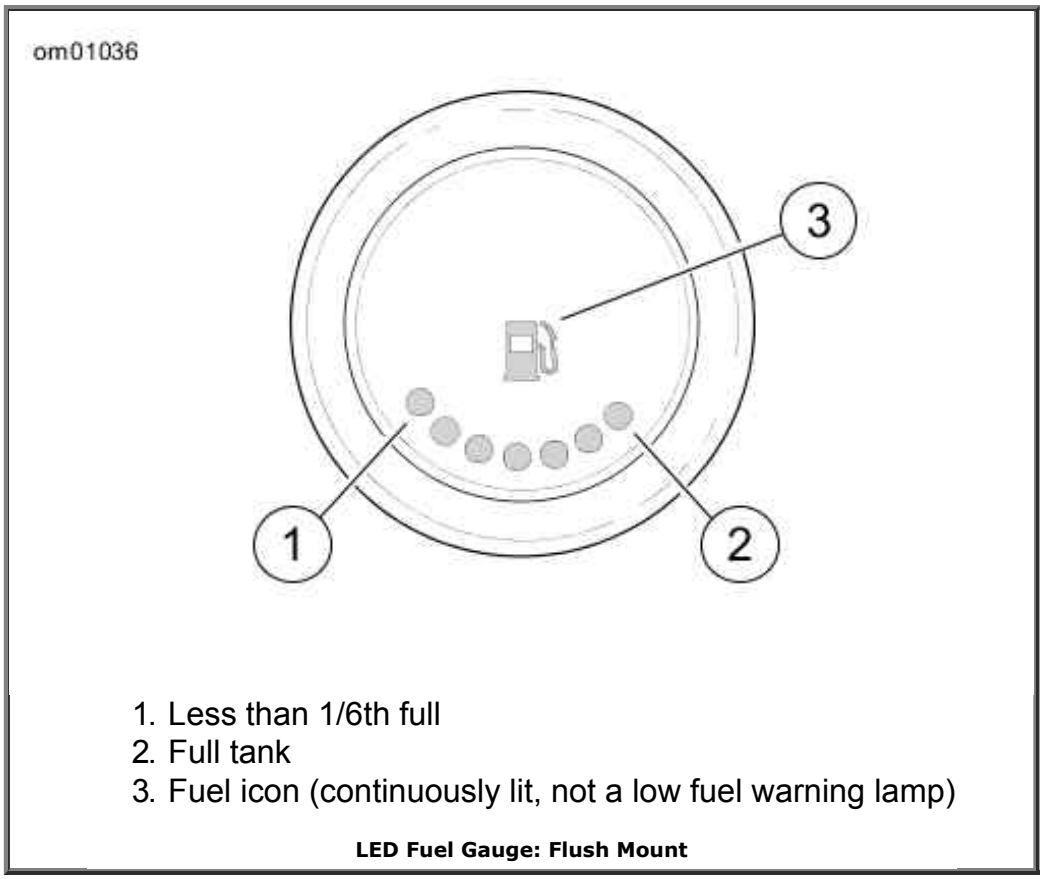

1. Less than 1/6th full
2. Full tank
3. Fuel icon (continuously lit, not a low fuel warning lamp)

LED Fuel Gauge: Flush Mount

Fork Lock: Softail Models

CAUTION

Protect your vehicle against theft. After parking your motorcycle, lock the steering head and remove ignition key from switch. Failure to lock your motorcycle may result in theft and/or equipment damage. (00151a)

See Fork Lock. Softail models have the fork lock incorporated in the steering head on the right hand side.

⚠WARNING

Do not operate vehicle with forks locked. Locking the forks restricts the vehicle's turning ability, which could result in death or serious injury. (00035a)

Using the fork lock immediately after parking your motorcycle will discourage unauthorized use or theft when parking your motorcycle.

To Lock Fork

1. Turn fork to full left position.
2. Insert ignition key into fork lock.
3. Push in on fork lock and turn to left position.
4. Remove ignition key.

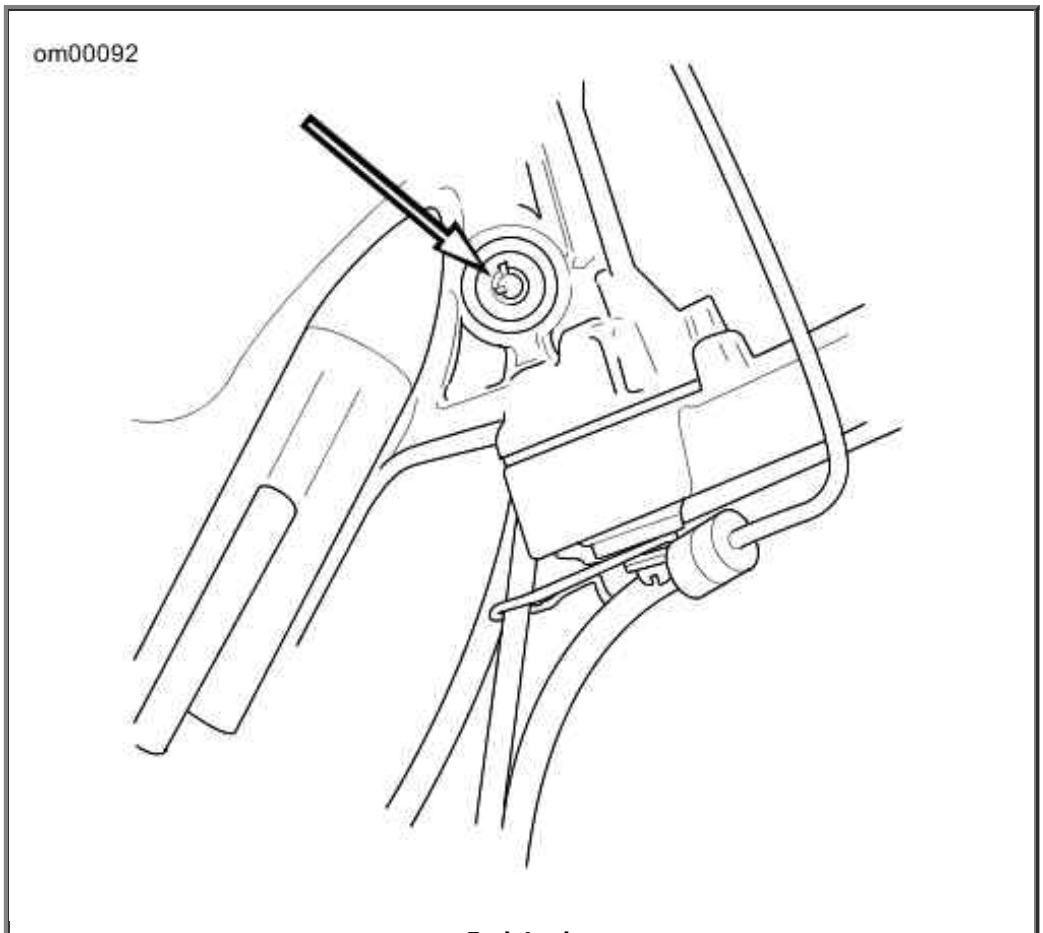

Fork Lock

Shock Absorbers: Softail Models

Softail models feature rear shock absorbers that can be adjusted. Rear shock spring preload may be varied to suit your own personal comfort.

NOTE:

Rear shocks are located under vehicle. Adjust shocks with the vehicle resting on the jiffy stand.

Adjustment

1. Loosen jam nut.

⚠WARNING

Be sure both shock absorbers are adjusted to same preload position. Improper adjustment can adversely affect stability and handling, which could result in death or serious injury. (00036a)

2. See Rear Shock Absorber Adjustment: Softail Models. Use a SPANNER WRENCH 94455-89 to turn the spring adjuster plate to the desired position.

    a. Turning the adjuster plates out (toward locknut) increases the spring preload to carry a heavier load.

    b. Turning the adjuster plates in (away from the locknut) decreases the spring preload to carry a lighter load.

3. Tighten jam nut.

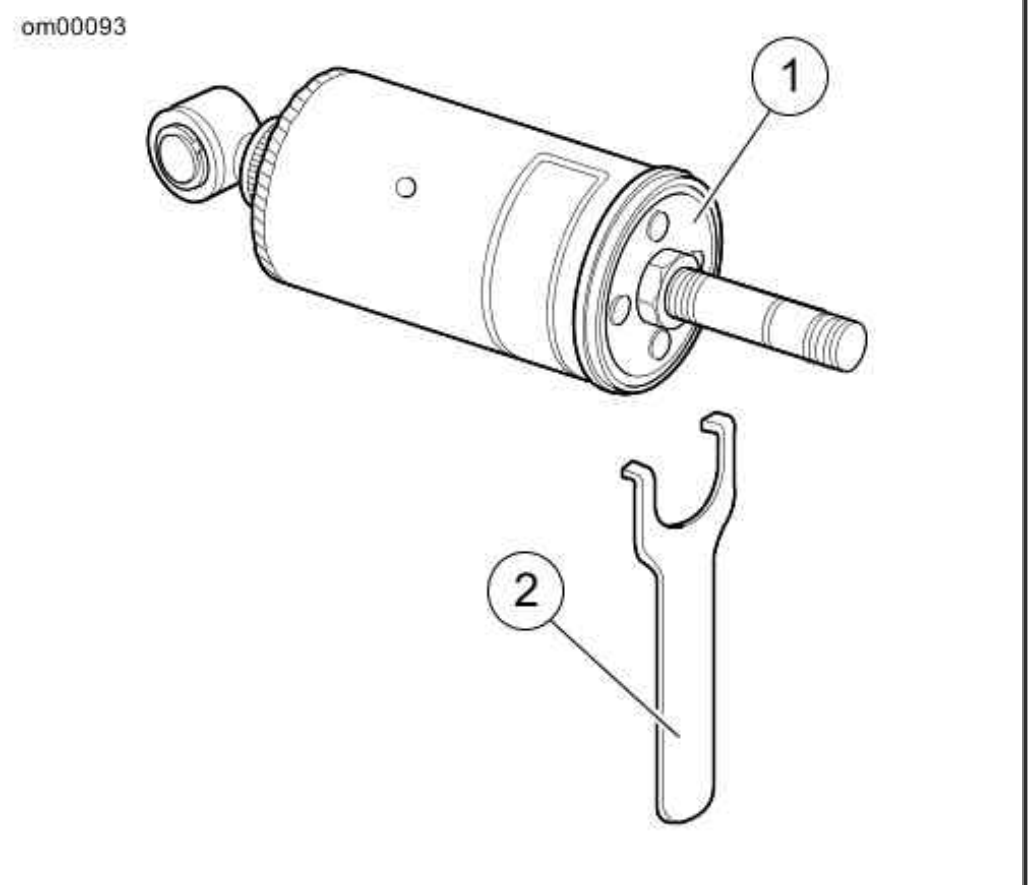

1. Adjuster plate
2. Spanner wrench

Rear Shock Absorber Adjustment: Softail Models

Hands-Free Security Module

Harley-Davidson Smart Security System

Components

See Security Module w/Antenna (shown removed). The Harley-Davidson Smart Security System (H-DSSS) consists of a Hands-Free Security Module (HFSM) (1) and a Hands-Free Antenna (2) mounted on the motorcycle, and a Hands-Free Fob **carried** by the rider/passenger.

After parking the motorcycle, turn the ignition key to OFF and the Smart Security System will

automatically **arm** within five seconds. While armed, the starter and ignition are disabled and the rider may leave the motorcycle knowing that the module will activate an alarm if someone tampers with the ignition or attempts to move the motorcycle.

If the fob is present, the module will automatically **disarm** when the ignition key is turned to IGNITION or ACCESS.

NOTE:

Do not relocate the module or the antenna on the motorcycle.

Options

Several options are available for the Harley-Davidson Smart Security System from the Harley-Davidson Genuine Motor Accessories and Motor Parts catalog. Options include:

- Security Pager and Security Pager Receiver II.
- Replacement Fobs.

See a Harley-Davidson dealer for details.

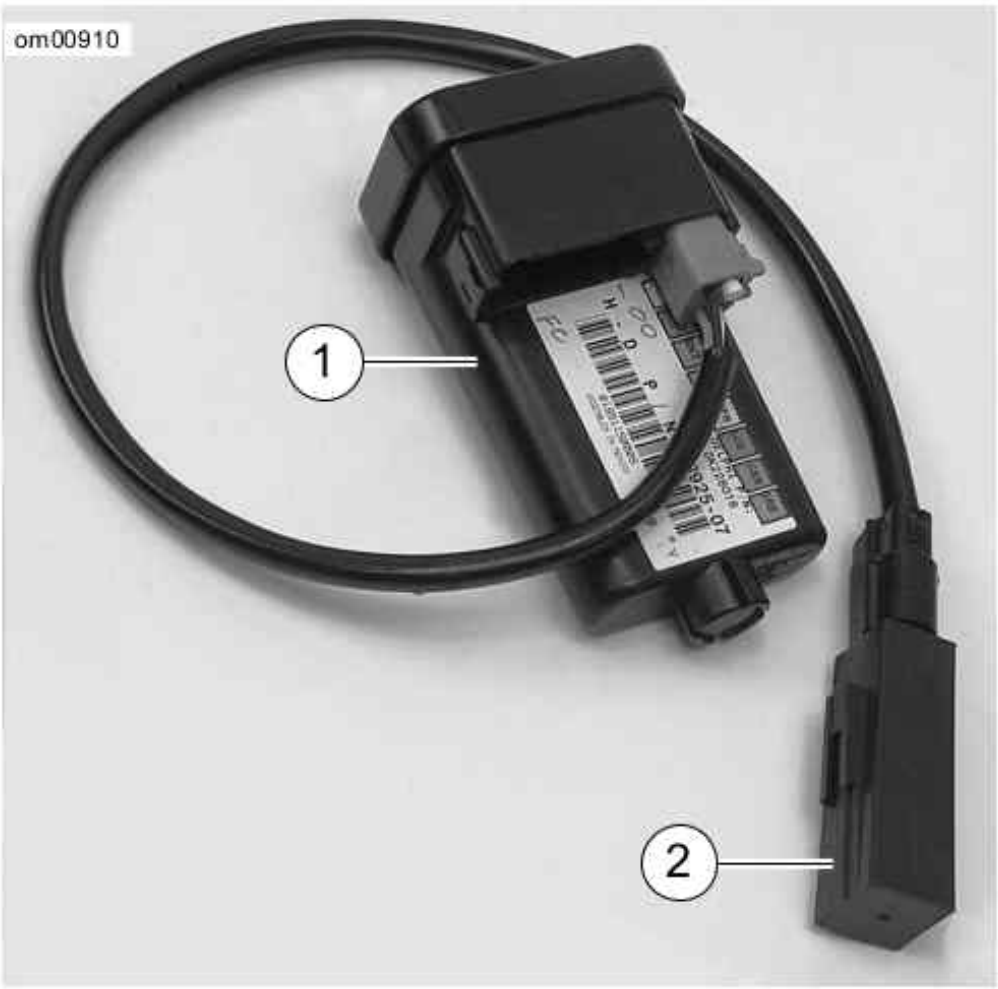

1. Hands-Free Security Module
2. Hands-Free Antenna

Security Module w/Antenna (shown removed)

FCC Regulations

FCC ID: L2C0027TR IC ID: 3432A-0027TR

FCC ID: L2C0028TR IC ID: 3432A-0028TR

This device complies with Part 15 of the FCC Rules and with RSS-210 of Industry Canada rules. Operation is subject to the following two conditions:

(1) This device may not cause harmful interference, and (2) This device must accept any interference received, including interference that may cause undesired operation.

WARNING: Changes or modifications not expressively approved by the party responsible for compliance could void the user's authority to operate the equipment.

The term "IC:" before the radio certification number only signifies that Industry Canada technical specifications were met.

Hands-Free Fob

Fob Assignment

See Hands-Free Fob: Smart Security System. Hands-Free Fobs are electronically assigned to the Harley-Davidson Smart Security System by a Harley-Davidson dealer so that the module can recognize a fob's unique signal. Only two fobs can be assigned to the module at any one time.

Replacement fobs can be purchased from a dealership but can only be assigned to the motorcycle by a trained Harley-Davidson technician.

NOTES:

- *The reusable label found on the fob packaging lists the serial number of the fob. For reference, fix the label to a blank "NOTES" page in the Owner's Manual.*
- *The serial number of the fob is also found on the inside of the fob. See Fob Battery.*
- *The module will arm only if the fob has been assigned by a Harley-Davidson dealer and a Personal Identification Number (PIN) has been entered in the system. The PIN should be recorded on the Personal Information page in the front of this Owner's Manual and on the removable wallet card.*
- *Should the rider misplace the fob or if the fob fails, the rider can refer to the wallet card and use the PIN to manually disarm the system. Refer to Arming and Disarming and Troubleshooting.*
- *The PIN can easily be changed by the rider at any time. Refer to Personal Identification Number (PIN).*

Hands-Free Fob: Smart Security System

Riding with a Fob

- Always carry the fob when riding, loading, fueling, moving, parking or servicing the motorcycle. Carry the fob in a convenient pocket.
- Do not leave the fob attached to the handlebars or store the fob in a saddlebag or Tour-Pak®. Unintentionally leaving the fob with the motorcycle when it's parked prevents the system from activating the alarm.
- Do not ride with the fob stored in a metal case or with the fob closer than 3.0 in. 76 mm to a cell phone, PDA, display or other electronic device. Any electromagnetic interference may prevent the fob from disarming the system.
- For added security, always lock the fork and remove the ignition key when parked. If the fob is within range and the motorcycle is unlocked, tampering with the motorcycle will not activate the alarm.

Personal Identification Number (PIN)

The Personal Identification Number (PIN) is a number that can be used to disarm the Harley-Davidson Smart Security System in case an assigned fob is misplaced, fails or if the fob and module cannot communicate because of electromagnetic interference.

A PIN is a five-digit number (1-9, no zeros).

Changing the PIN

To maintain security, the rider can change the PIN at any time. Refer to Changing the PIN.

Changing the PIN

STEP NO.	ACTION	WAIT FOR CONFIRMATION	NOTES
1	Select a 5-digit (1 thru 9) PIN and record on the wallet card from Owner's Manual.		
2	With an assigned fob present, turn **IGN** key **IGNITION**-OFF-**IGNITION**-OFF-**IGNITION.**		
3	Press **left** turn signal switch **3 times**.		
4	Press **right** turn signal switch **1 time** and release.	Turn signals will flash 3 times. Current PIN will appear in odometer. The first digit will be flashing.	See Odometer Windows - PIN.
5	Enter first digit (a) of new PIN by pressing **left** turn signal switch **a** times.		
6	Press **right** turn signal switch **1 time** and release.	The new digit (a) will replace the current in odometer window.	
7	Enter second digit (b) of new PIN by pressing **left** turn signal switch **b** times.		
8	Press **right** turn signal switch **1 time** and release.	The new digit (b) will replace the current in odometer window.	
9	Enter third digit (c) of new PIN by pressing **left** turn signal switch **c** times.		
10	Press **right** turn switch **1 time** and release.	The new digit (c) will replace the current in odometer window.	
11	Enter fourth digit (d) of new PIN by pressing **left** turn signal switch **d** times.		
12	Press **right** turn switch **1 time** and release.	The new digit (d) will replace the current in odometer window.	
13	Enter fifth digit (e) of new PIN by pressing **left** turn signal switch **e** times.		
14	Press **right** turn switch **1 time** and release.	The new digit (e) will replace the current in odometer window.	
15	Before the module rearms, turn the ignition key to **OFF**.	The odometer will return to mileage.	Turning the ignition key to **OFF** stores the new PIN in the module.

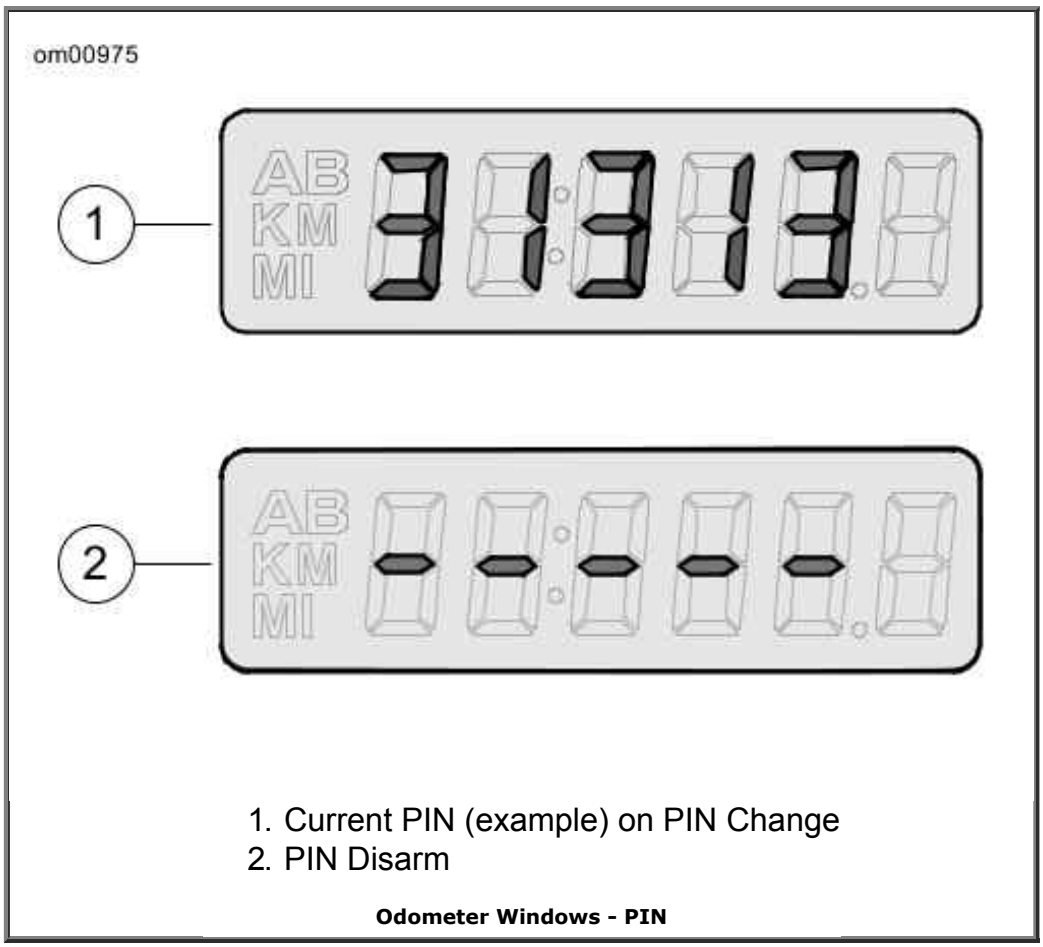

1. Current PIN (example) on PIN Change
2. PIN Disarm

Odometer Windows - PIN

Security Status Indicator

See Security Status Indicator. The illuminated key icon in the speedometer face indicates the status of the Harley-Davidson Smart Security System.

- **Armed:** A key icon that blinks approximately every 3 seconds indicates that the system is armed.
- **Disarmed:** After the ignition/headlamp switch is turned to IGNITION and the system disarms, the key icon will remain illuminated for approximately four seconds and then turn off.
- **Service:** A key icon that remains illuminated longer than four seconds indicates that service of the module is required.

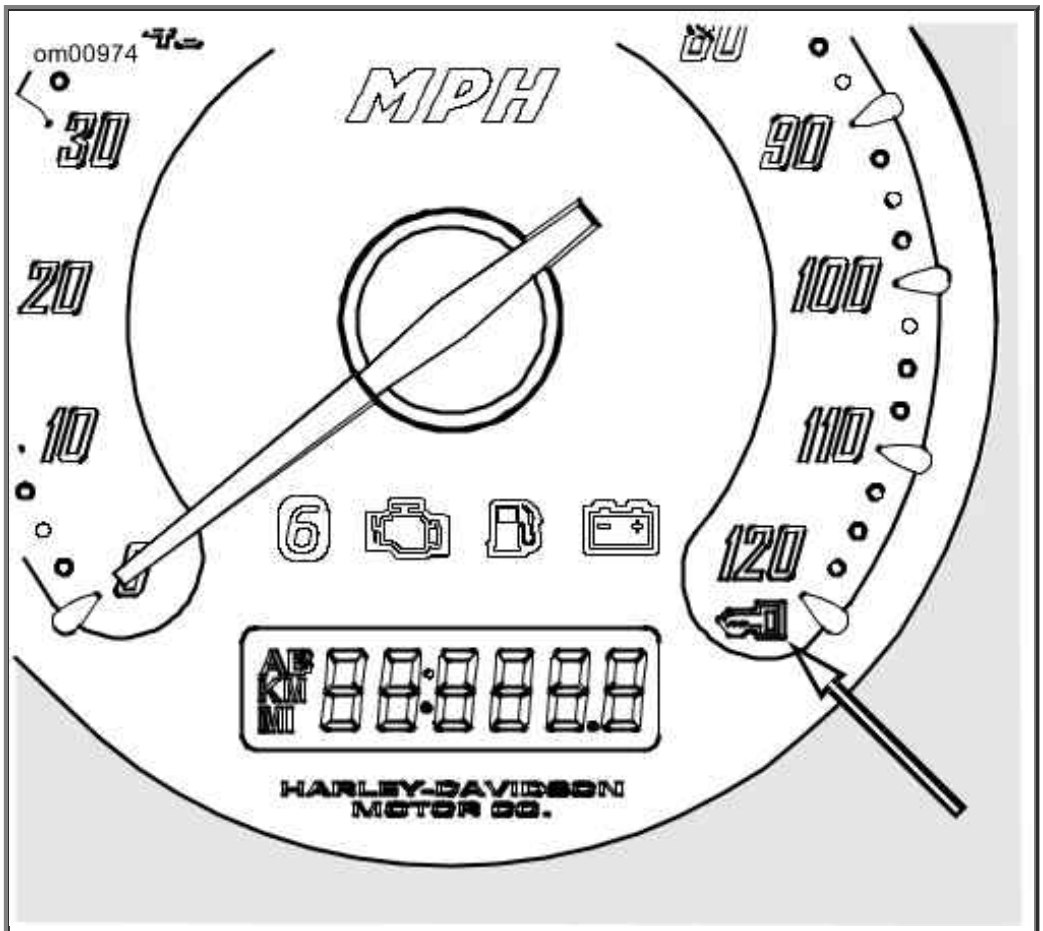

Security Status Indicator

Arming and Disarming

Arming

When the motorcycle is parked and the ignition key is turned to OFF, the Harley-Davidson Smart Security System arms automatically within five seconds if no motion is detected. Even when the fob is present, the system will arm.

On arming, the turn signals will flash twice and the siren will chirp twice. While armed, the key icon in the speedometer face will flash every three seconds.

NOTE:

International Models: *The HFSM must be in the Chirp Mode for the siren to chirp on arming or on disarming. See Siren Chirp Mode (Confirmation).*

Disarming

Once disarmed, the rider may ride or move the motorcycle for parking, storage or service without setting off the alarm.

Fob: An armed Smart Security System is automatically disarmed when the ignition key is turned to IGNITION with the fob present.

When the module disarms, the siren will chirp once and the key icon will illuminate for a solid four seconds and then turn off.

NOTE:

Any motion, like lifting the motorcycle up off of its jiffy stand, or turning the ignition key to IGNITION and the module will electronically "poll" for the presence of the fob. If the fob is present, the system disarms.

Personal Identification Number (PIN): If the fob is misplaced or if the present fob fails to communicate with the module, the system can be disarmed with the Personal Identification Number (PIN).

Disarming with a PIN

Do not turn handlebars, straddle seat or lift motorcycle off the jiffy stand. During a PIN disarm, if the Smart Security System detects motorcycle motion the system will activate the alarm.

Entering a PIN to Disarm Harley-Davidson Smart Security System

STEP NO.	ACTION	WAIT FOR CONFIRMATION	NOTES
1	If necessary, verify the current 5-digit PIN.		Should be recorded on wallet card.
2	Turn ignition key to **IGNITION**.		
3	Quickly (within 2 seconds of turning ignition key) hold **both** turn signal switches in until confirmation.	Key icon flashes at fast rate. In the odometer window, a flashing dash will be followed by four more dashes.	See Odometer Windows - PIN. Five dashes will appear in the odometer window.
4	Enter first digit (**a**) in the PIN by pressing **left** turn switch **a times.**	The first digit (**a**) in the odometer will be the first digit in the PIN.	
5	Press **right** turn switch **1 time.**	The first digit is stored and the dash will flash.	Serves as enter key.
6	Enter second digit (**b**) in the PIN by pressing **left** turn switch **b times.**	The second digit (**b**) in the odometer will be the second digit in the PIN.	
7	Press **right** turn switch **1 time.**	The second digit is stored and the next dash will flash.	Serves as enter key.
8	Enter third digit (**c**) in the PIN by pressing **left** turn switch **c times.**	The third digit (**c**) in the odometer will be the third digit in the PIN.	
9	Press **right** turn switch **1 time**.	The third digit is stored and the next dash will flash.	Serves as enter key.
10	Enter fourth digit (**d**) in the PIN by pressing **left** turn switch **d times**.	The fourth digit (**d**) in the odometer will be the fourth digit in the PIN.	
11	Press **right** turn switch **1 time.**	The fourth digit is stored and the next dash will flash.	Serves as enter key.
12	Enter fifth digit (**e**) in the PIN by pressing **left** turn switch **e**	The fifth digit (**e**) in the odometer will be the fifth digit in	

	times.	the PIN.	
13	Press **right** turn switch **1 time**.	The fifth digit is stored. The key icon stops blinking.	Smart Security System is disarmed.

NOTES:

- *At any time during a PIN disarm, if the fob is brought within range of the motorcycle, the Smart Security System will disarm when the module receives the coded signal from the fob.*
- *If a mistake is made while entering PIN, wait two minutes before another disarming attempt.*
- *The Smart Security System will remain disarmed until the ignition key is turned to OFF.*

Arming with Hazard Warning 4-Way Flashers On

If it should be necessary to leave a motorcycle parked along side a roadway, the hazard warning four-way flashers can be turned ON and the Smart Security System armed.

1. Turn ignition key to IGNITION.
2. Simultaneously press both left and right turn signal switches to turn the four-way flashers ON.
3. Turn the ignition key to OFF to arm the Smart Security System.

To turn hazard warning flashers OFF, turn the ignition key to IGNITION and simultaneously press the left and right turn signal switches.

Alarm

Warnings

Once armed, if the motorcycle is moved or lifted up off of its jiffy stand or if the ignition key is turned to IGNITION and the fob is not present, the alarm will warn the operator with three alternate flashes of the turn signals and a chirp of the siren.

Within four seconds, if the motorcycle is back on its jiffy stand and no further motion is detected and/or the ignition key is turned to OFF, the module will remain armed without activating the alarm.

If the motorcycle motion continues or the ignition key is not turned back to OFF, the module will issue a second warning four seconds after the first.

NOTE:

During warnings and alarms, the starter motor and the ignition circuits are disabled.

The Alarm

If the Smart Security System is still detecting motion and/or if the ignition key has not been turned back to OFF after a second warning, the system will activate the alarm.

When activated, the Smart Security System will:

- Alternately flash the four turn signals.
- See Smart Siren. Sound the siren.

Duration: The alarm will stop within 30 seconds and if no motion is detected, the alarm will not restart.

However, if motorcycle motion continues the system will repeat the 30 second alarm and recheck for motion. The alarm will repeat this 30 second alarm cycle for five minutes (10 cycles) or until the alarm is deactivated.

NOTE:

The alarm will also activate the LED, vibration or audible modes of a Harley-Davidson Security Pager. A pager can operate either in silent or in combination with the Smart Siren. The range of a pager can be up to 0.5 mile 0.8 km . See a Harley-Davidson dealer for details.

Smart Siren

Deactivate the Alarm

Key Fob: Bring the fob to the motorcycle. After the module identifies that the fob is present, the system will terminate the alarm.

Siren Chirp Mode (Confirmation)

Chirpless Mode

In the chirpless mode, the siren does not chirp on arming or disarming.

NOTE:

Even when armed in the chirpless mode, the siren still chirps warnings on movement and will activate the alarm through cycles.

Chirp Mode

On arming in the chirp mode, the siren responds with two chirps. When disarming, the siren responds with a single chirp.

Switching Modes

Cycling quickly through two armings and disarmings will switch the system from either the chirpless mode or the chirp mode to its opposite.

1. With the fob present, the ignition switch to ON and the system disarmed, turn the ignition switch OFF.
2. When the system arms (2 flashes of turn signals), immediately turn the ignition switch to ON.
3. Wait until the security lamp goes out, then immediately turn the ignition switch OFF.
4. When the system arms (2 flashes of turn signals), immediately turn the ignition switch to ON and wait for system to disarm.

Transport Mode

It is possible to arm the security system without enabling the motion detector for one ignition cycle. This allows the vehicle to be picked up and moved in an armed state, however, any attempt to start the engine will trigger the alarm.

To Enter Transport Mode

1. Turn the Ignition Switch to IGNITION.
2. Set the Engine Stop Switch to OFF.
3. With an assigned fob within range, turn the Ignition Switch from IGNITION to ACC.
4. Simultaneously press both the left and the right turn signal switches. This must be done within five seconds of turning the Ignition Switch to ACC.
5. After the turn signals flash once, turn the Ignition Switch to OFF and the module is armed.
6. Confirmation: Turn signal blinks three times when armed for one ignition cycle.

To Exit Transport Mode

Return the system to normal operation:

With the fob present, turn the Ignition Switch to IGNITION to disarm the HFSM. To cancel the transport mode, set the Engine Stop Switch to RUN.

Storage and Service Departments

Long Term Parking

To maintain arming, store the fob beyond the range of the module. If the motorcycle is to be moved while parked, have the fob present.

If the motorcycle will not be operated for several months, such as during the winter season, follow the Owner's Manual instructions for storage. Refer to Motorcycle Storage.

Service Departments

When the motorcycle is to be left at a Harley-Davidson dealer, there are two options:

1. Leave an assigned fob with the dealer.
2. To maintain possession of the fob, ask the dealer to disable the module for service (service mode) before leaving the dealership.

Fob Battery

Replacing the Battery

Replace the key fob battery every year.

1. See Hands-Free Fob Battery. Slowly turn a thin blade in the thumbnail slot (1) on the side of the fob to separate the two halves.
2. Remove the battery (2) and discard.

   NOTE:

   Dispose of the old battery in accordance with local regulations.

3. Install a **new** battery (Panasonic 2032 or equivalent) with the positive (+) side down.
4. Align the two halves of the fob and snap together.

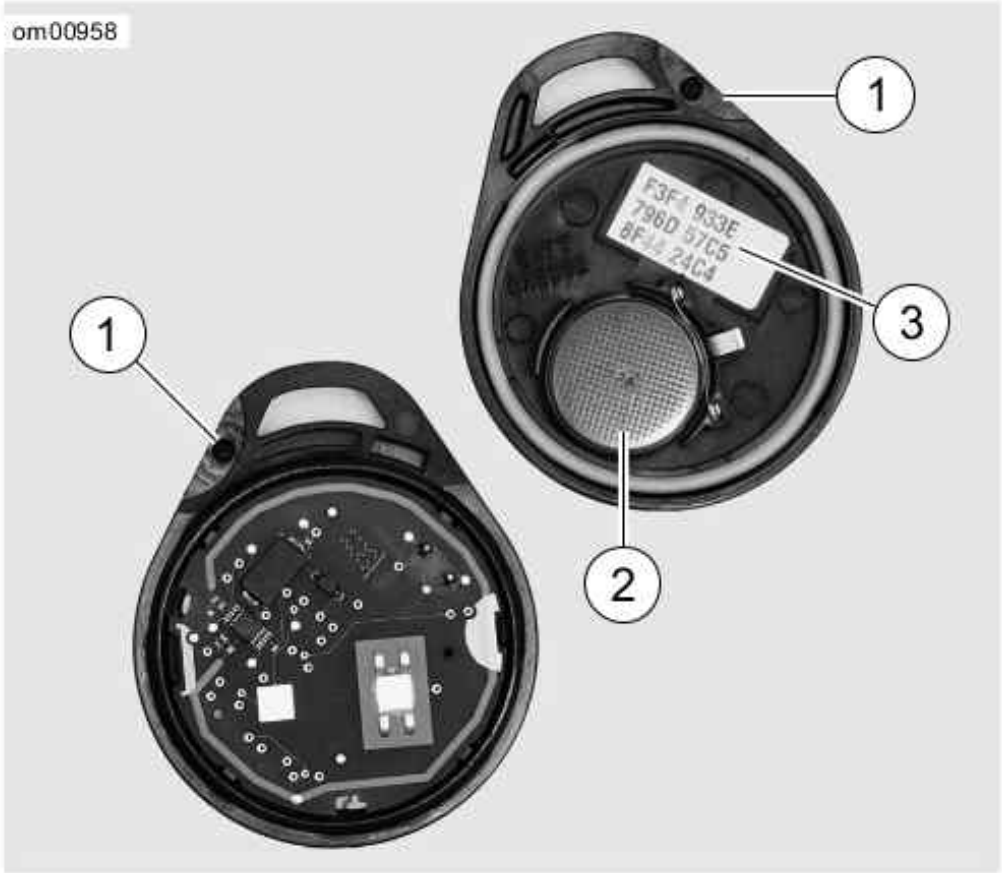

1. Thumbnail slot
2. Battery
3. Fob serial number

Hands-Free Fob Battery

Power Disconnects

Siren

On a power disconnect, to prevent the module from actuating the siren:

1. Verify that the fob is present.
2. Turn the ignition key to IGNITION.
3. Pull the main fuse from its holder or disconnect the battery.

Troubleshooting

Key Icon

If the system key icon stays illuminated while riding, see a Harley-Davidson dealer.

Fob

With the fob present, if the Smart Security System continues to actuate warnings and alarms, one

of the following can be the cause:

1. **Electromagnetic Interference:** Other electronic devices, power lines, or other electromagnetic sources can cause the Smart Security System to operate inconsistently.

    a. Verify that the fob is not in a metal enclosure or within 3.0 in. 76 mm of any other electronic devices.

    b. Place the fob on the seat and turn the ignition key to IGNITION. After the module disarms, return the fob to a convenient location.

    c. Move motorcycle at least 15 feet 5 m from the spot of interference.

2. **Discharged Fob Battery:** Use the PIN to disarm the module. Replace the battery. Refer to Fob Battery.

3. **A Damaged Fob:** Use the PIN to disarm the motorcycle. Replacement fobs are available for purchase from a Harley-Davidson dealer.

Siren

- If the siren does not chirp two or three times on a valid arming command from the security module, the siren is either in the Chirpless Mode, not connected, not working, or the siren wiring was opened or shorted while the siren was disarmed.
- If the siren is armed and the internal siren battery is dead, shorted, disconnected, or has been charging for a period longer than 24 hours, the siren will respond with three chirps on arming instead of two.
- The internal siren battery may not charge if the vehicle's battery is less than 12.5 volts.
- If the siren enters the self-driven mode where it is powered from the siren's internal 9 volt battery, the turn signal lamps may or may not alternately flash. If the security module activates the siren, the turn signal lamps will alternately flash. If the siren has been armed and a security event occurs, and the siren is in self-driven mode, the siren will alarm for 20 to 30 seconds and then turn off for 5 to 10 seconds. This alarm cycle will be repeated ten times if the siren is in the self-driven mode.

Operation

Operating Recommendations: FXSTSSE3

⚠WARNING

Motorcycles are different from other vehicles. They operate, steer, handle and brake differently. Unskilled or improper use could result in loss of control, death or serious injury. (00556c)

- **Take a rider training course.**
- **Read Owner's Manual before riding, adding accessories or servicing.**
- **Wear a helmet, eye protection and protective clothing.**
- **Never tow a trailer.**

CAUTION

Do not run the engine at extremely high RPM with clutch disengaged or transmission in neutral. Running an engine at high RPM can result in engine damage. (00177a)

- The maximum recommended safe engine speed is 5500 RPM.
- Do not idle engine unnecessarily for more than a few minutes with motorcycle standing still.

CAUTION

Do not exceed the maximum safe RPM specified below under any conditions. Exceeding the maximum safe engine RPM can result in equipment damage. (00248a)

NOTE:

The maximum recommended engine speed for the FXSTSSE3 motorcycle is 5500 RPM.

CAUTION

Air-cooled engines require air movement over the cylinders and heads to maintain proper operating temperature. Extended periods of idling or parade duty can overheat the engine, resulting in serious engine damage. (00178a)

An engine running long distances at high speed must be given closer than ordinary attention to avoid overheating and possible engine damage.

This applies particularly to a motorcycle equipped with windshield and fairing.

NOTE:

Have the engine checked regularly and keep it well tuned.

⚠WARNING

When riding on wet roads, brake efficiency and traction are greatly reduced. Failure to use care when braking, accelerating or turning on wet roads can cause loss of control, which could result in death or serious injury. (00041a)

NOTE:

When descending upon a long, steep grade, downshift and use engine compression together with intermittent application of both brakes to slow the motorcycle.

⚠WARNING

Continuous use of brake causes overheating and reduced efficiency, which could result in death or serious injury.

(00042a)

CAUTION

Do not coast for long distances with the engine off or idling. The transmission is properly lubricated only when the engine is running. Coasting long distances can result in transmission damage. (00180b)

⚠WARNING

Do not tow a disabled motorcycle. Towing can adversely affect stability and handling, which could result in death or serious injury. (00017a)

Break-in Riding Rules

The First 500 Miles (800 Kilometers)

The sound design, quality materials, and workmanship that are built into your new Harley-Davidson will give you optimum performance right from the start.

To allow your engine to wear in its critical parts, we recommend that you observe the riding rules provided below for the first 500 miles 800 kilometers . Adherence to these suggestions will help to assure good future durability and performance.

1. During the first 50 miles 80 kilometers of riding, keep the engine speed below 4000 RPM in any gear. Do not lug the engine by running or accelerating at very low RPM, or by running at high RPM longer than needed for shifting or passing.
2. Up to 500 miles 800 kilometers , vary the engine speed and avoid operating at any steady engine speed for long periods. Engine speed up to 5000 RPM in any gear is permissible.
3. Drive slowly and avoid fast starts at wide open throttle until the engine has warmed up.
4. Avoid lugging the engine by not running the engine at very low speeds in higher gears.
5. Avoid hard braking. New brakes need to be broken-in by moderate use for the first 200 miles 300 kilometers .

Pre-Riding Checklist

⚠WARNING

Read the CONTROLS AND INDICATORS section before riding your motorcycle. Failure to understand the operation of the motorcycle could result in death or serious injury. (00043a)

Before riding your motorcycle at any time, make a general inspection to be sure it is in safe riding

condition.

⚠WARNING

Stop the engine when refueling or servicing the fuel system. Do not smoke or allow open flame or sparks near gasoline. Gasoline is extremely flammable and highly explosive, which could result in death or serious injury. (00002a)

⚠WARNING

Avoid spills. Slowly remove filler cap. Do not fill above bottom of filler neck insert, leaving air space for fuel expansion. Secure filler cap after refueling. Gasoline is extremely flammable and highly explosive, which could result in death or serious injury. (00028a)

⚠WARNING

Use care when refueling. Pressurized air in fuel tank can force gasoline to escape through filler tube. Gasoline is extremely flammable and highly explosive, which could result in death or serious injury. (00029a)

1. Verify fuel is present in tank and add fuel if required.
2. Adjust mirrors to proper riding positions.
3. Verify oil is present in oil tank.
4. Check controls to make sure they operate properly. Operate the front and rear brakes, throttle, clutch and shifter. All controls should operate freely without binding.
5. Check steering for proper operation by turning the handlebars through the full operating range. Handlebars should turn smoothly without binding.

⚠WARNING

Be sure tires are properly inflated, balanced and have adequate tread. Inspect your tires regularly and see a Harley-Davidson dealer for replacements. Riding with excessively worn, unbalanced or under-inflated tires can adversely affect stability and handling, which could result in death or serious injury. (00014a)

6. Check tire condition and pressure. Incorrect pressure will result in poor riding characteristics and can affect handling and stability. Refer to tire specifications for correct inflation pressure to use.

⚠WARNING

Be sure headlamp, tail and stop lamp and turn signals are operating properly before riding. Poor visibility of rider to other motorists can result in death or serious injury. (00478b)

7. Check all electrical equipment and switches including the headlamp, stop lamp, turn signals and horn for proper operation.
8. Check for any fuel, oil or hydraulic fluid leaks.
9. Check secondary belt for wear or damage.
10. Service your motorcycle as necessary.

Jiffy Stand Interlock: International Models

Some international models are equipped with a jiffy stand interlock feature.

If the rider attempts to start the engine or pushes the starter button while the transmission is in gear and the jiffy stand is down, then the jiffy stand interlock system will not permit the engine to run. The message "SidE StAnd" will scroll across the odometer to indicate this to the rider. Raising the jiffy stand (or putting the transmission in neutral) will permit the engine to run and clear the message.

If the jiffy stand falls out of the fully retracted position while riding at speeds greater than 10 mph 15 km/h , then the jiffy stand interlock system will maintain engine operation and alert the rider about this by illuminating the indicators (flash twice) and scroll the message "SidE StAnd" across the odometer. The message will remain until the system detects the jiffy stand in the fully retracted position again. The rider may continue to operate the vehicle while in this mode.

The rider may clear the text messages at any time by pressing the function switch once while the vehicle is powered up.

NOTE:

If the operation of raising the jiffy stand and putting the transmission in gear is rapidly executed, the jiffy stand bouncing off the frame could cause the jiffy stand interlock system to activate and stop the engine.

Starting the Engine

General

CAUTION

The engine should be allowed to run slowly for 15-30 seconds. This will allow the engine to warm up and let oil reach all surfaces needing lubrication. Failure to comply can result in engine damage. (00563b)

The engine is equipped with Electronic Sequential Port Fuel Injection (ESPFI). The amount of fuel delivered to the engine is electronically control by the Engine Control Module (ECM). Do not roll the throttle before starting. Rolling the throttle before starting the motorcycle is unnecessary.

Starting

⚠WARNING

Shift transmission to neutral before starting engine to prevent accidental movement, which could result in death or serious injury. (00044a)

1. Turn ignition/headlamp key switch to IGNITION position. Do not roll the throttle.

   NOTE:

   The engine lamp will light for approximately 4 seconds and you will hear the fuel pump purr for approximately 2 seconds as it operates to fill the fuel lines with gasoline.

2. See Right Handlebar Controls. Turn the OFF/RUN switch to RUN position.

3. Squeeze the clutch lever in against the hand grip.

   NOTE:

   To activate the starting system, the clutch interlock circuitry requires the clutch be disengaged, clutch lever pulled in against left handgrip, and/or the transmission be shifted to the neutral position (green neutral lamp lit).

4. Raise the sidestand (required for international models).

5. Press the starter button to start the motorcycle.

6. When the engine has started, you can operate your motorcycle as you normally would after raising the jiffy stand.

NOTE:

If the fuel tank becomes completely dry, it may take a few seconds longer to start the motorcycle after filling the tank. It is not necessary to take any extra measure before starting the motorcycle.

Automatic Compression Release (ACR)

This vehicle is equipped with Automatic Compression Releases (ACRs). During starting, a small auxiliary valve in each cylinder head is opened automatically by the ECM. The open valve releases the air compressed in the cylinder heads and allows the starter motor to turn the high compression engine over at a faster rate to aid starting.

After starting and during normal operation, the ACR valves remain closed.

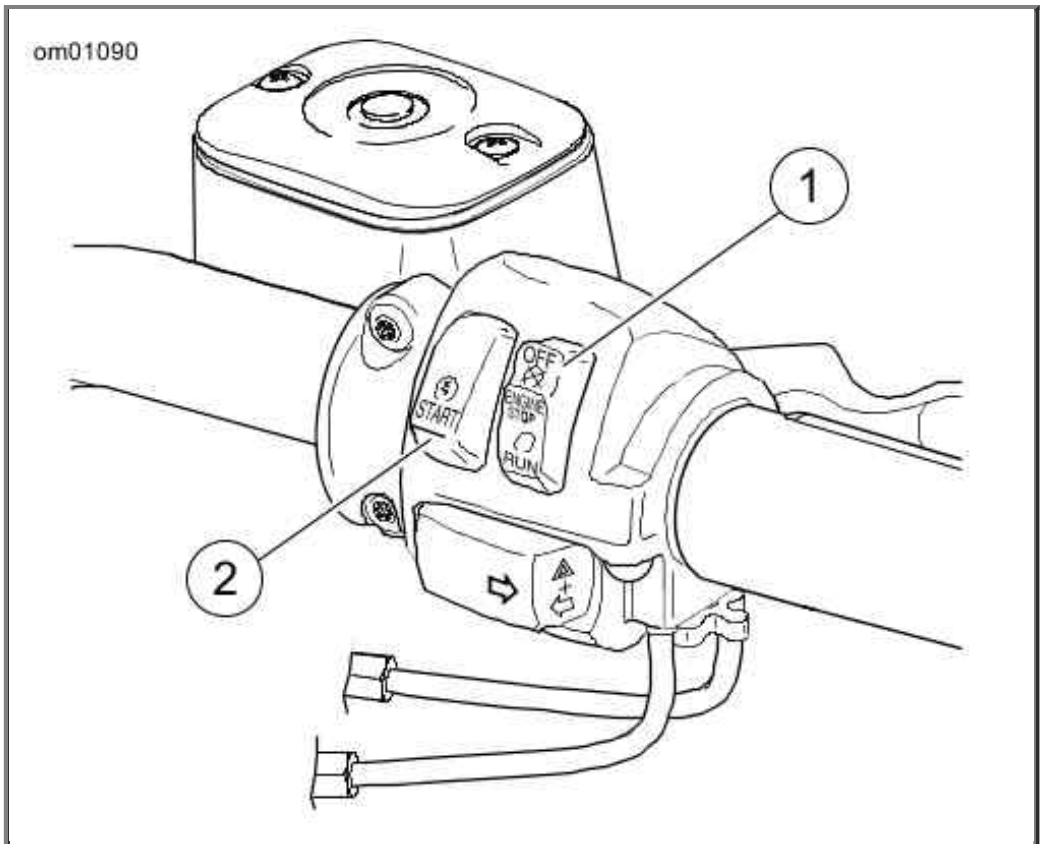

1. Engine off/run switch
2. Engine start switch

Right Handlebar Controls

Engine Idle Temperature Management System

For those riders who frequently find themselves in riding conditions where the vehicle is subjected to prolonged idle conditions or traffic congestion, the motorcycle is equipped with an Engine Idle Temperature Management System (EITMS) to provide limited cooling of the rear cylinder.

When the engine is in EITMS operation, you may notice a difference in idle cadence. Additionally, there may be a unique exhaust odor. These are both considered to be normal conditions.

An optional calibration without EITMS enabled is available. See a Harley-Davidson dealer if you wish to have this calibration installed.

Stopping The Engine

1. Stop the engine by turning OFF the engine stop switch on the right handlebar.
2. Turn OFF the ignition/headlamp key switch. If the engine should be stalled or stopped in any way, turn off the ignition/headlamp key switch at once to prevent battery discharge.

Shifting Gears

Getting Started

CAUTION

The clutch must be fully disengaged before attempting a gear shift. Failure to fully disengage the clutch can result in equipment damage. (00182a)

Gear shift pattern is first gear down, next five gears up.

1. With motorcycle engine running and jiffy stand retracted, pull the clutch hand lever in against handlebar grip to fully disengage clutch.
2. Push the foot shift lever down to end of its travel and release. The transmission is now in first gear.
3. To start forward motion, release the clutch lever slowly to engage the clutch and at the same time, open throttle gradually.

Upshift (Acceleration)

Refer to Upshift (Acceleration) Gear Speeds: Six Speed. Engage second gear after the motorcycle has reached the appropriate shifting speed.

Upshift (Acceleration) Gear Speeds: Six Speed

GEAR CHANGE	MPH	KPH
First to second	15	25
Second to third	25	40
Third to fourth	35	55
Fourth to fifth	45	70
Fifth to sixth	55	85

1. Close the throttle.
2. Disengage the clutch (pull clutch lever in).
3. See Upshift Pattern: Six Speed. Lift the gear shift lever up to the end of its travel and release.
4. Engage the clutch (release clutch lever) and gradually open the throttle.
5. Repeat the previous steps to engage third, fourth, fifth, and sixth gears.

NOTES:

- *Disengage the clutch completely before each gear change.*
- *Partially close the throttle so the engine will not drag when clutch is again engaged (clutch lever released).*

Downshift (Deceleration)

⚠WARNING

Do not downshift at speeds higher than those listed in the Changing Gear Speeds table. Shifting to lower gears when speed is too high can cause the rear wheel to lose traction and lead to loss of vehicle control, which could result in death or serious injury. (00045a)

Gear shift pattern is first gear down; next five gears up. Refer to Downshift (Deceleration) Gear Speeds: Six Speed for shifting speeds.

Downshift (Deceleration) Gear Speeds: Six Speed

GEAR CHANGE	MPH	KPH
Sixth to fifth	50	80
Fifth to fourth	40	65
Fourth to third	30	50
Third to second	20	30
Second to first	10	15

NOTE:

The shifting points shown in the tables constitute a recommendation. Vehicle owners may determine that their own individual shifting patterns may differ than those stated and are additionally appropriate for individual riding styles.

See Downshift Pattern: Six Speed. When engine speed decreases, as in climbing a hill or running at a reduced speed, shift to the next lower gear while partially closing the throttle so the engine accelerates as soon as the clutch lever is released.

NOTES:

- *Disengage the clutch completely before each gear change.*
- *Partially close the throttle so the engine will not drag when clutch is again engaged (clutch lever released).*

CAUTION

Shift to neutral before stopping engine. Shifting mechanism can be damaged by shifting gears while engine is stopped. (00183a)

The gear shifter mechanism permits shifting the transmission to neutral from either first or second gear.

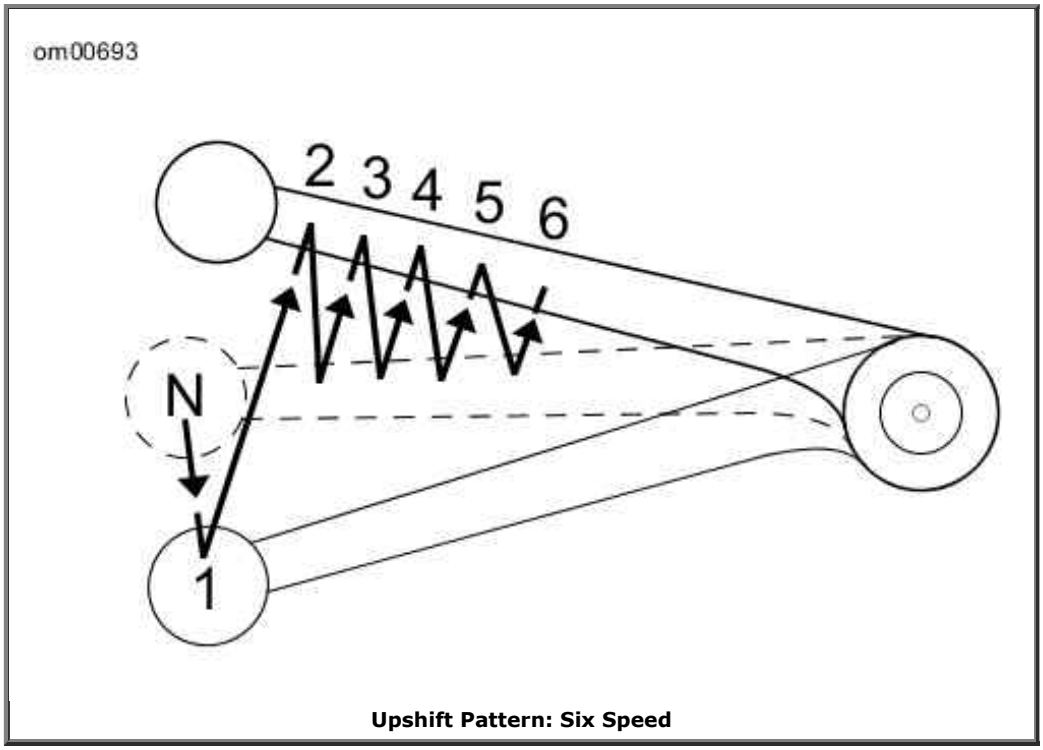

Upshift Pattern: Six Speed

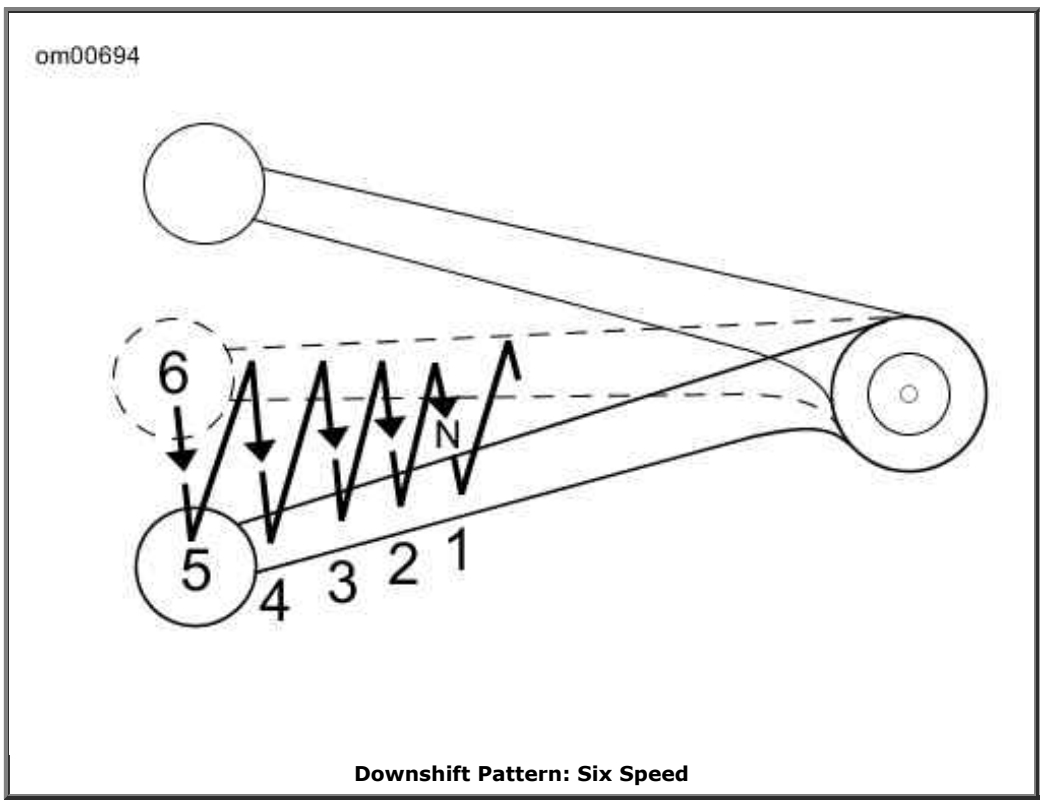

Downshift Pattern: Six Speed

Maintenance and Lubrication

Safe Operating Maintenance

⚠WARNING

Perform the service and maintenance operations as indicated in the regular service interval table. Lack of regular maintenance at the recommended intervals can affect the safe operation of your motorcycle, which could

result in death or serious injury. (00010a)

Good maintenance creates a safe motorcycle. A careful check of certain equipment must be made after periods of storage. Also, frequently inspect the motorcycle between the regular service intervals to determine if additional maintenance is necessary.

Check the following items:

1. Tires for correct pressure, abrasions or cuts.
2. Belt and primary chain for proper tension, wear or damage.
3. Brakes, steering and throttle for responsiveness and freedom from binding.
4. Brake fluid level and condition. Hydraulic lines and fittings for leaks. Also, check brake pads and discs for wear.
5. Cables for fraying or crimping and free operation.
6. Engine oil and primary chaincase/transmission fluid levels.
7. Headlamp, tail lamp, brake lamp and turn signals for proper operation.

Break-in Maintenance: FXSTSSE3

NOTE:

The performance of new motorcycle initial service is required to keep your new motorcycle warranty in force and to guarantee proper emissions system operation.

Refer to Regular Service Intervals: 2009 FXSTSSE3. After your new motorcycle has been ridden its first 500 miles 800 kilometers , it should be taken to an authorized Harley-Davidson dealer for initial service operations.

Engine Lubrication: Synthetic Oil

Engine oil is a major factor in the performance and service life of the engine. Always use the proper grade of oil for the lowest temperature expected before the next scheduled oil change. Your authorized dealer has the proper oil to suit your requirements.

Your motorcycle comes equipped with Screamin' Eagle® SYN3 Synthetic Motorcycle Lubricant. If SYN3 is not available and addition of motor oil is required, the first choice would be to add H-D 360 SAE 20W50 to the SYN3 for engine lubrication. Although H-D 360 is compatible with SYN3, we suggest the mixture of the fluids be changed as soon as possible.

If H-D 360 is not available, the second choice would be to add an acceptable diesel engine oil. We again suggest the mixture of the fluids be changed as soon as possible. DO NOT add diesel engine oil to the primary chaincase or transmission.

To switch lubricant to H-D 360, completely drain the SYN3 before filling with H-D 360. A residual amount of fluid will remain. It is not required to flush out the residual fluid.

CAUTION

Do not switch lubricant brands indiscriminately because some lubricants interact chemically when mixed. Use of inferior lubricants can damage the engine. (00184a)

Refer to Recommended Synthetic Engine Oils. If it is necessary to add oil and Screamin' Eagle SYN3 Synthetic Motorcycle Lubricant is not available, use an oil certified for diesel engines. Acceptable diesel engine oil designations include: CF-4, CG-4, CH-4 and CI-4.

The preferred viscosities for the diesel engine oils in descending order are: 20W50, 15W40 and 10W40.

At the first opportunity, see an authorized dealer to change back to 100 percent Harley-Davidson oil.

Recommended Synthetic Engine Oils

H-D TYPE	VISCOSITY	H-D RATING	LOWEST AMBIENT TEMPERATURE	COLD WEATHER STARTS BELOW 50° F (10° C)
Screamin' Eagle SYN3 Synthetic Motorcycle Lubricant	SAE 20W50	HD 360	Above 40° F 4° C	Excellent
H-D Multi-grade	SAE 10W40	HD 360	Below 40° F 4° C	Excellent
H-D Multi-grade	SAE 20W50	HD 360	Above 40° F 4° C	Good
H-D Regular Heavy	SAE 50	HD 360	Above 60° F 16° C	Poor
H-D Extra Heavy	SAE 60	HD 360	Above 80° F 27° C	Poor

Checking Oil Level: FXSTSSE3

Engine oil level should be checked only when engine is at normal operating temperature.

- Check engine oil supply at each complete fuel refill.
- Refer to Regular Service Intervals: 2009 FXSTSSE3. Oil should be changed at proper intervals in normal service at warm or moderate temperatures.
- Oil change intervals should be shorter in cold weather. See Winter Lubrication.

NOTE:

The motorcycle should be on jiffy stand when checking oil level.

CAUTION

Oil level cannot be accurately measured on a cold engine. For pre-ride inspection, with motorcycle leaning on jiffy stand on level ground, oil should register on dipstick between arrows when engine is cold. Do not add oil to

bring the level to the FULL mark on a COLD engine. (00185a)

CAUTION

Do not allow hot oil level to fall below Add/Fill mark on dipstick. Doing so can result in equipment damage and/or equipment malfunction. (00189a)

CAUTION

Do not overfill oil tank. Doing so can result in oil carryover to the air cleaner leading to equipment damage and/or equipment malfunction. (00190a)

Oil Level Cold Check

Perform engine oil level **COLD CHECK** as follows:

1. For preride inspection with the vehicle on jiffy stand on level ground, remove and wipe off the dipstick. Screw filler cap/dipstick back onto spout until tight.
2. See Engine Oil Level. Remove the filler cap/dipstick and verify oil registers on the dipstick between the two marks.
    a. If oil level registers on the dipstick, proceed to Oil Level Hot Check.
    b. If oil does not register on the dipstick, proceed to step 3.
3. With the dipstick removed, look into the dipstick opening and verify the oil level is near the filler neck.
    a. If the oil level is at or near the filler neck, proceed to Oil Level Hot Check.
    b. If the oil level is not present, add only enough oil to bring the level to the filler neck. Then proceed to Oil Level Hot Check.

Oil Level Hot Check

Perform engine oil level **HOT CHECK** as follows:

1. Ride motorcycle until engine is at normal operating temperature.

    NOTE:

    The engine will require a longer warm up period in colder weather.

2. With the vehicle upright on level ground, allow engine to idle for 1-2 minutes. Turn engine off.
3. With vehicle on jiffy stand, remove and wipe off the dipstick. Screw in the filler cap/dipstick until fully seated in the spout.

4. See Engine Oil Level. Remove the dipstick and note the level of the oil. Add only enough oil to bring the level to the FULL mark on the dipstick. Do not overfill.

   NOTE:

   Refer to Recommended Synthetic Engine Oils. Use only recommended oil specified under Engine Lubrication: Synthetic Oil.

5. Start engine and carefully check for oil leaks around drain plug and oil filter.

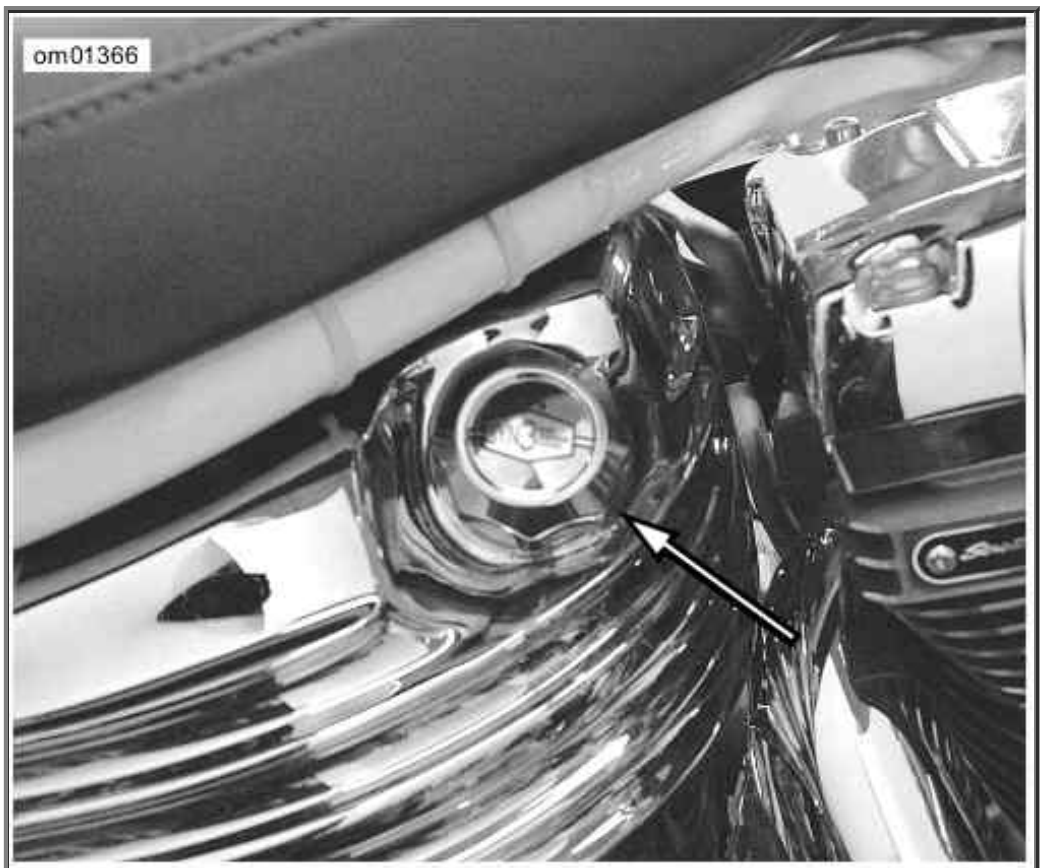

Checking Oil Tank Level: FXSTSSE3

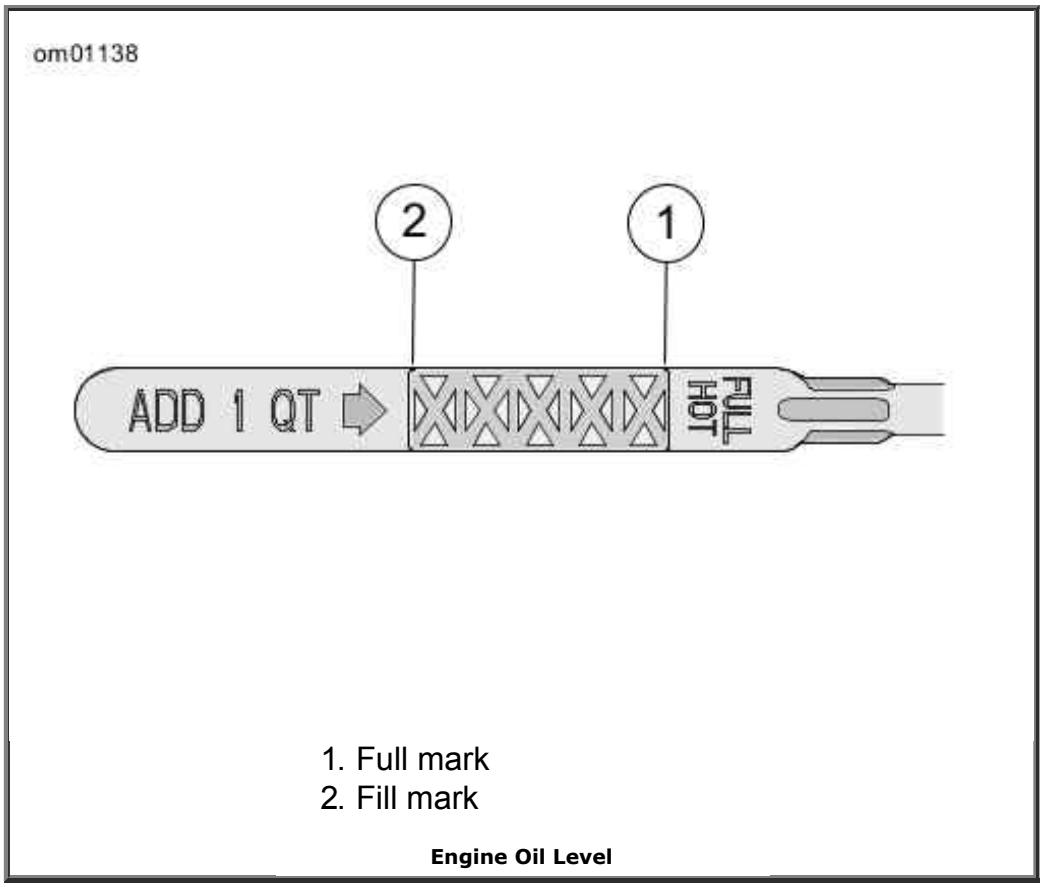

Engine Oil Level

Changing Oil and Oil Filter: FXSTSSE3

Oil filter is located on an oil filter mount in front of the engine.

CAUTION

Do not switch lubricant brands indiscriminately because some lubricants interact chemically when mixed. Use of inferior lubricants can damage the engine. (00184a)

⚠WARNING

Be sure that no lubricants or fluids get on tires, wheels or brakes when changing fluid. Traction can be adversely affected, which could result in loss of control of the motorcycle and death or serious injury. (00047d)

Twin Cam 110B equipped vehicles require the premium oil filter (Part No. 63798-99A Chrome or Part No. 63731-99A Black).

1. See Checking Oil Tank Level: FXSTSSE3. Unscrew and remove the filler cap/dipstick.
2. See Oil Tank Drain Plug: Softail Models. Remove engine oil drain plug with o-ring (2). Allow oil to completely drain into a suitable container.

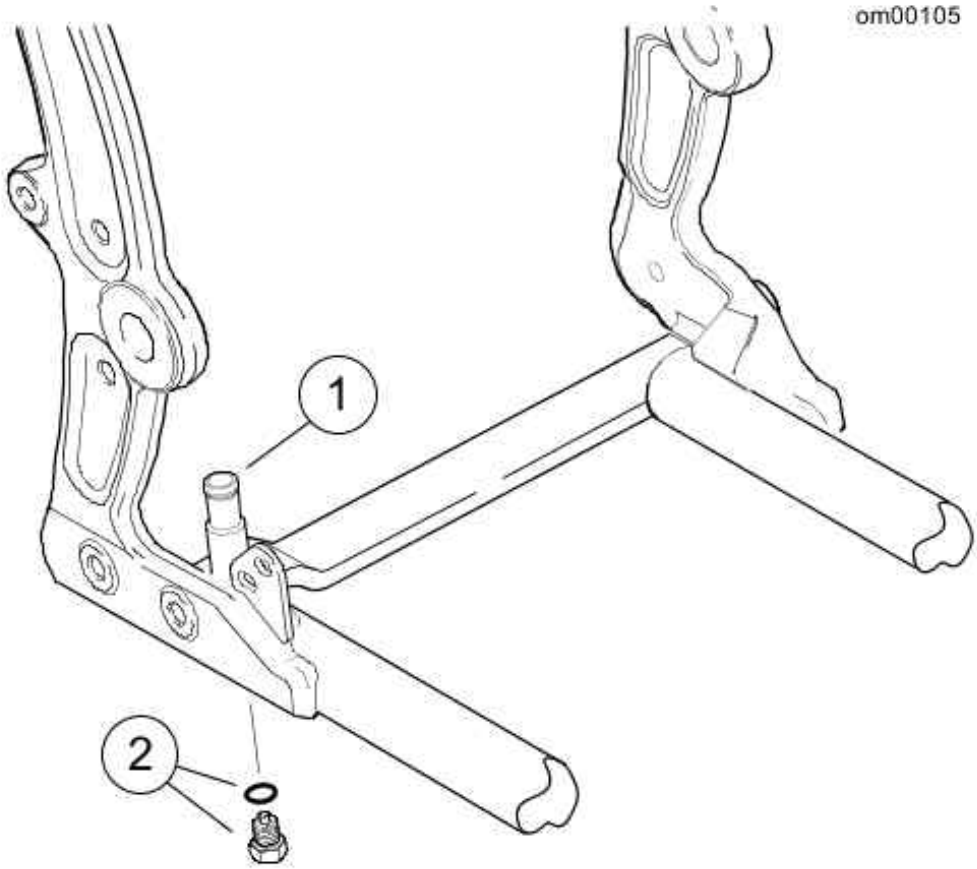

1. Frame connection for oil tank drain hose
2. Oil tank drain plug and o-ring

Oil Tank Drain Plug: Softail Models

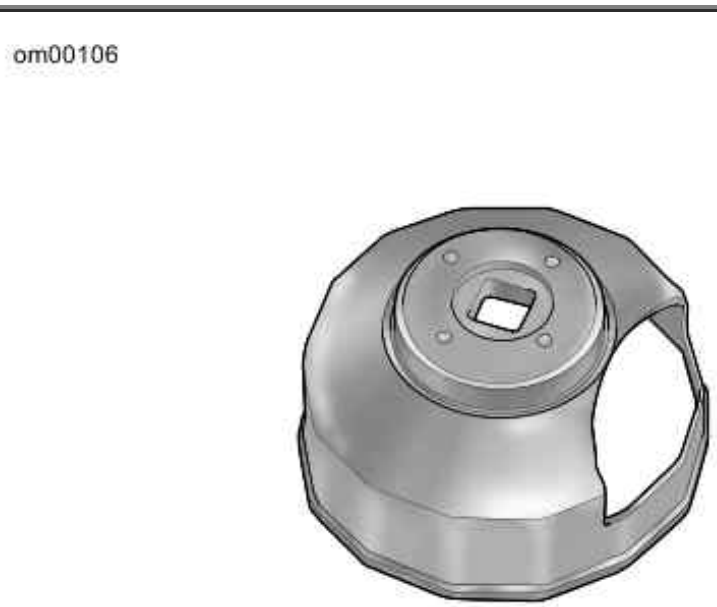

Oil Filter Wrench (Part No. HD-44067)

CAUTION

Use Harley-Davidson oil filter wrench for filter removal.

This tool can prevent damage to crankshaft position sensor and/or sensor cable. (00192b)

NOTE:

Dispose of oil and oil filter in accordance with local regulations.

3. See Oil Filter Wrench (Part No. HD-44067). Remove the oil filter using the OIL FILTER WRENCH HD-44067 . Clean the oil filter mount flange of any old gasket material (surface should be smooth and free of any debris or old gasket material).

4. Inspect o-ring for tears or damage. Replace if required. Wipe any foreign material from plug.

5. Install o-ring and drain plug and tighten to 14-21 ft-lbs (19.0-28.5 Nm).

6. See Applying Thin Oil Film. Apply a thin film of oil to gasket contact surface on mounting plate, gasket and new oil filter.

7. Screw filter onto adapter until gasket contacts plate surface, then apply another 3/4-1 full turn.

8. Fill oil tank with no more than 3.5 U.S. quarts 3.31 liters of oil. Use the proper grade of oil for the lowest temperature expected before next oil change.

CAUTION

Do not overfill oil tank. Doing so can result in oil carryover to the air cleaner leading to equipment damage and/or equipment malfunction. (00190a)

9. Start engine and carefully check for oil leaks around drain plug and oil filter.

10. Check engine oil level.

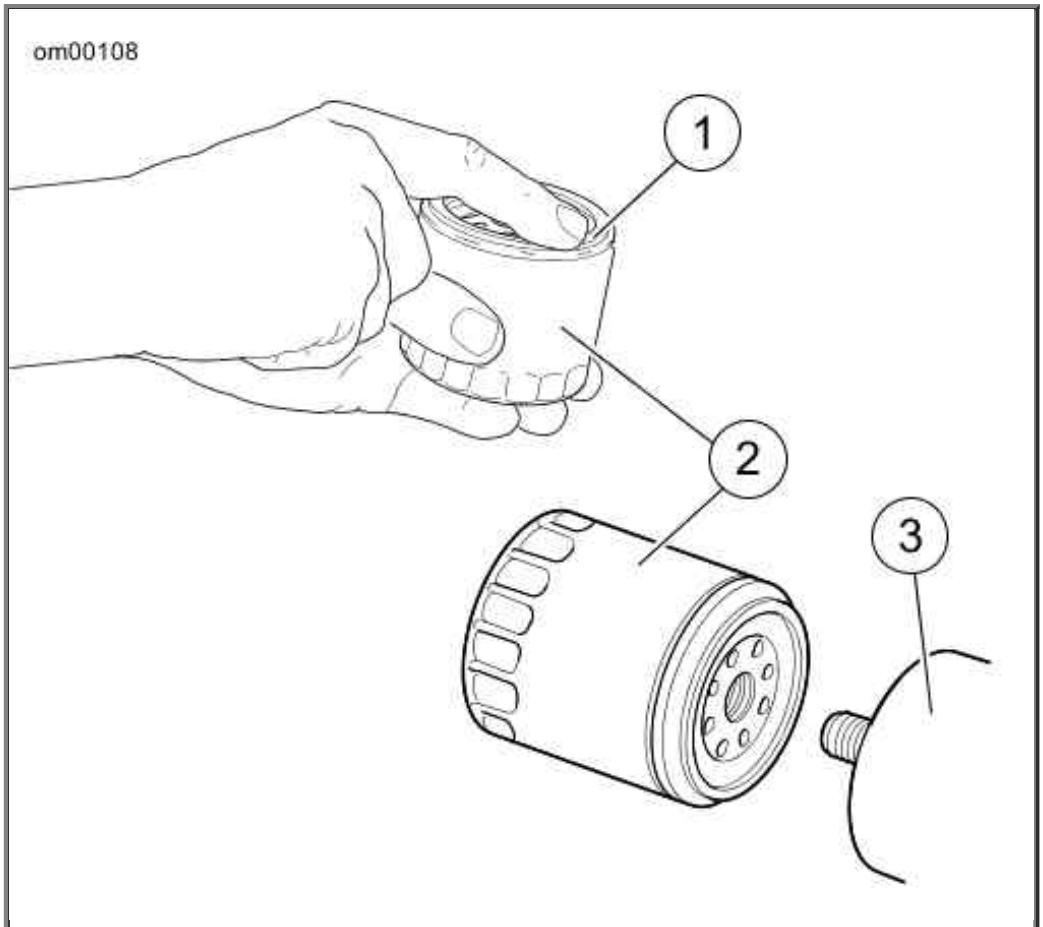

1. Thin oil film ONLY
2. Oil filter
3. Mounting plate

Applying Thin Oil Film

Winter Lubrication

In colder climates, the engine oil should be changed often. If motorcycle is used frequently for short trips, less than 15 miles 24 kilometers , in ambient temperatures below 60° F 16° C , oil change intervals should be reduced to 1500 miles 2400 kilometers . Motorcycles used only for short runs must have a thorough tank flush-out before **new** oil is put in. The tank flush-out should be performed by an authorized dealer or qualified technician.

NOTE:

The further below freezing the temperature drops, the shorter the oil change interval should be.

Water vapor is a normal by-product of combustion in any engine. During cold weather operation, some of the water vapor condenses to liquid form on the cool metal surfaces inside the engine. In freezing weather this water will become slush or ice and, if allowed to accumulate too long, may block the oil lines and cause damage to the engine.

If the engine is run frequently and allowed to thoroughly warm up, most of this water will become vapor again and will be blown out through the crankcase breather.

If the engine is not run frequently and allowed to thoroughly warm up, this water will accumulate, mix with the engine oil and form a sludge that is harmful to the engine.

Transmission Lubrication: FXSTSSE3

The transmission lubricant level should be checked monthly.

Your motorcycle comes equipped with Screamin' Eagle SYN3 Synthetic Motorcycle Lubricant. For transmission lubrication, it is not recommended to mix SYN3 with other lubricant products.

Refer to Regular Service Intervals: 2009 FXSTSSE3. The transmission should be drained and refilled with fresh lubricant at proper intervals.

NOTE:

When checking the transmission lubricant level, the motorcycle should be leaning on the jiffy stand. Allow a short period of time to equalize lubricant level in the transmission compartments.

Check Lubricant Level

---

1. Park motorcycle on the jiffy stand.
2. See Transmission Filler Plug/Dipstick Location: FXSTSSE3. Remove the threaded filler plug/dipstick by turning the plug counterclockwise.
3. See Transmission Filler Plug/Dipstick Lubricant Level. Wipe off filler plug/dipstick and place it back in the filler hole. Do not screw in. (Dipstick should rest on threads of the case.)
4. Remove the plug/dipstick and check the level. The lubricant level should be in the hash marks between the ADD and FULL lines on the dipstick.

⚠WARNING

Be sure that no lubricants or fluids get on tires, wheels or brakes when changing fluid. Traction can be adversely affected, which could result in loss of control of the motorcycle and death or serious injury. (00047d)

CAUTION

When draining or adding lubricant, do not allow dirt, debris or other contaminants to enter the engine. (00198a)

5. If the lubricant level is below the ADD mark, add lubricant. Do not overfill (bringing the level above the FULL mark) or leakage may occur. The transmission fluid capacity is approximately 32 fluid ounces 0.95 liters .

   NOTES:
   - *When filling the transmission, use Screamin' Eagle SYN3 Synthetic Motorcycle Lubricant (Part No. 99824-03, U.S. quart).*
   - *If SYN3 is not available and addition of lubricant to the transmission is required, SYN3 must be completely drained before using other lubricant products. A residual amount of fluid will remain. It is not required to flush out the residual fluid.*

6. Inspect o-ring for tears or damage. Replace if required. Wipe any foreign material from plug.
7. Install threaded filler plug/dipstick and tighten to 25-75 in-lbs (2.8-8.5 Nm).

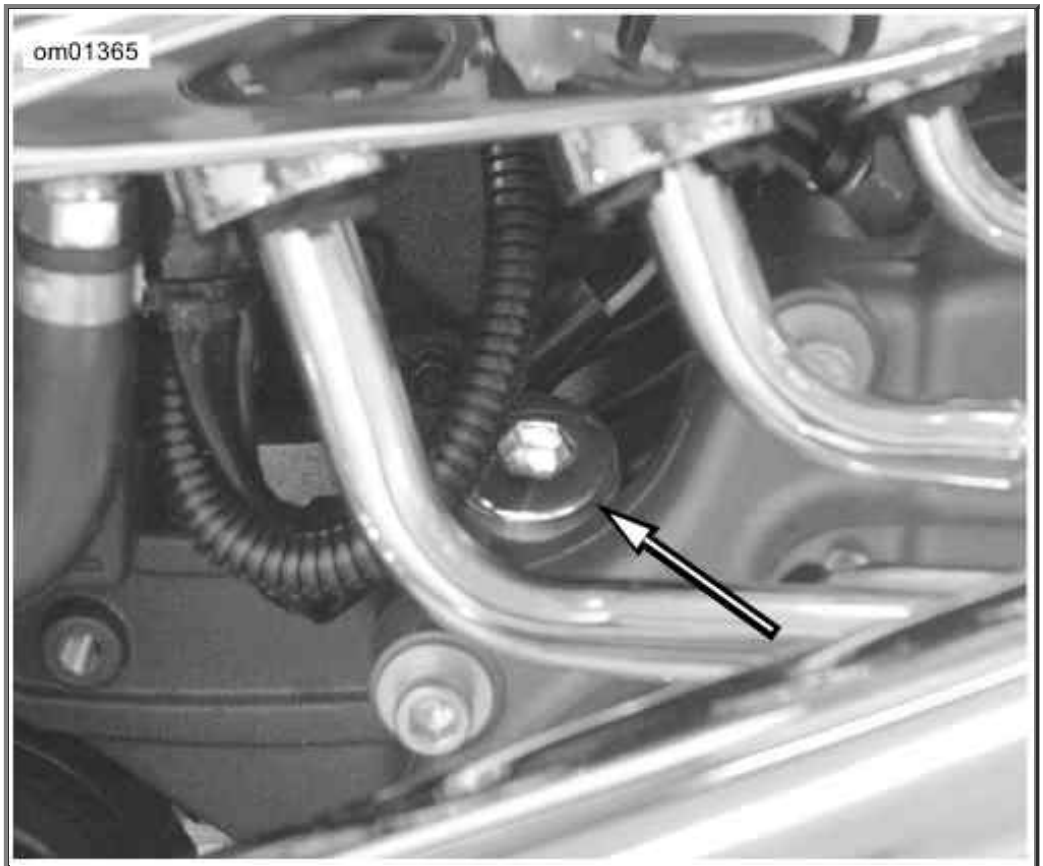

Transmission Filler Plug/Dipstick Location: FXSTSSE3

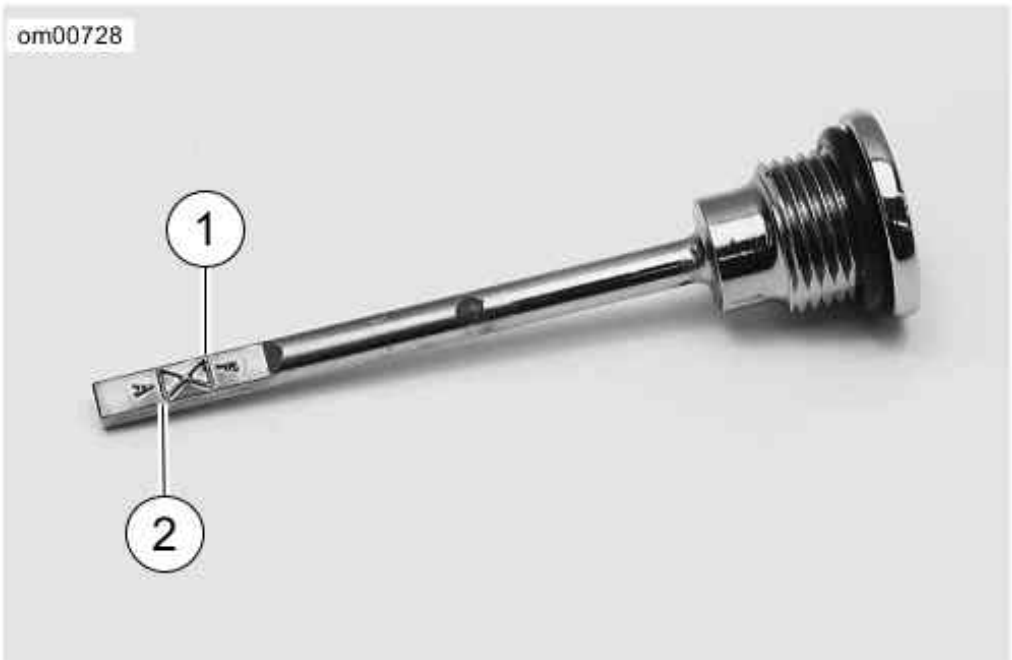

1. FULL
2. ADD

Transmission Filler Plug/Dipstick Lubricant Level

Changing Transmission Fluid

1. See Transmission Filler Plug/Dipstick Location: FXSTSSE3. Remove the transmission

filler plug/dipstick.

2. See Transmission Drain Plug (Bottom View). Remove transmission drain plug and drain lubricant into a suitable container.

CAUTION

When draining or adding lubricant, do not allow dirt, debris or other contaminants to enter the engine. (00198a)

⚠WARNING

Be sure that no lubricants or fluids get on tires, wheels or brakes when changing fluid. Traction can be adversely affected, which could result in loss of control of the motorcycle and death or serious injury. (00047d)

NOTE:

Dispose of transmission lubricant in accordance with local regulations.

3. Inspect o-ring for tears or damage on the drain plug. Replace if required. Wipe any foreign material from plug.

4. Install drain plug and tighten to 14-21 ft-lbs (19.0-28.5 Nm).

5. Fill the transmission with 32 fl. oz. 0.95 liters of Screamin' Eagle SYN3 Synthetic Motorcycle Lubricant (Part No. 99824-03, U.S. quart). Do not overfill or leakage may occur.

6. Install threaded filler/check plug and tighten to 25-75 in-lbs (2.8-8.5 Nm).

7. Start engine and carefully check for oil leaks around drain plug.

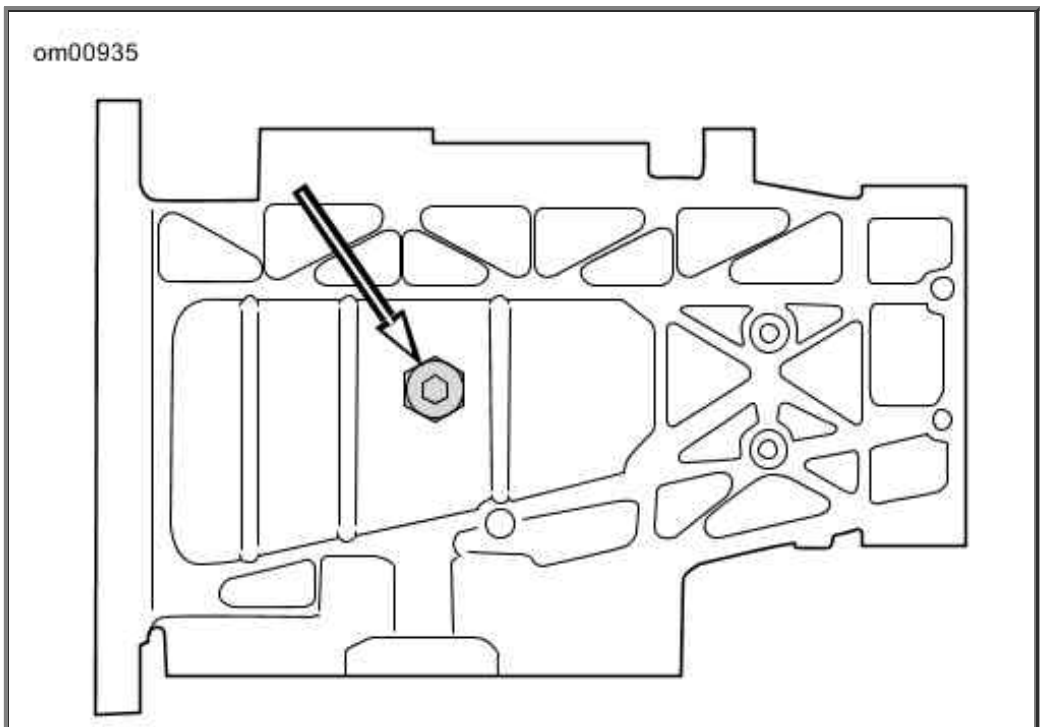

Transmission Drain Plug (Bottom View)

Chaincase Lubricant: FXSTSSE3

Refer to Regular Service Intervals: 2009 FXSTSSE3. The chaincase lubricant should be drained and refilled with fresh lubricant at proper intervals.

CAUTION

Do not overfill the primary chaincase with lubricant. Overfilling can cause rough clutch engagement, incomplete disengagement, clutch drag and/or difficulty in finding neutral at engine idle. (00199b)

Changing Chaincase Lubricant

1. Ride motorcycle until engine is warmed up to normal operating temperature.

CAUTION

When draining or adding lubricant, do not allow dirt, debris or other contaminants to enter the engine. (00198a)

2. See Clutch Cover. Using a T27 TORX drive head, remove five screws (3) (with captive washers) to free clutch inspection cover (2) from primary chaincase cover.
3. See Removing Chaincase Drain Plug. Remove magnetic drain plug at bottom of inner primary chaincase cover. Drain lubricant into suitable container.

   NOTE:

   Dispose of chaincase lubricant in accordance with local regulations.

4. Clean drain plug. If plug has accumulated a lot of debris, inspect the condition of the chaincase components.
5. Install **new** o-ring on drain plug.
6. Install drain plug back into inner primary chaincase cover. Tighten plug to 14-21 ft-lbs (19-28 Nm).

CAUTION

Do not overfill the primary chaincase with lubricant. Overfilling can cause rough clutch engagement, incomplete disengagement, clutch drag and/or difficulty in finding neutral at engine idle. (00199b)

7. Pour 32 fluid ounces 0.95 liter of Harley-Davidson Screamin' Eagle SYN3 Synthetic Motorcycle Lubricant (Part No. 99824-03 U.S. quart) through the clutch inspection cover opening.

⚠WARNING

Be sure that no lubricants or fluids get on tires, wheels or brakes when changing fluid. Traction can be adversely affected, which could result in loss of control of the motorcycle and death or serious injury. (00047d)

CAUTION

When draining or adding lubricant, do not allow dirt, debris or other contaminants to enter the engine. (00198a)

NOTE:

Use only Harley-Davidson Screamin' Eagle SYN3 Synthetic Motorcycle Lubricant.

8. Install clutch inspection cover and **new** gasket as follows:

   a. Thoroughly wipe all lubricant from cover mounting surface and groove in chaincase.

   b. Position gasket in groove in primary chaincase cover and press each of the nubs on gasket into the groove. The nubs will retain the seal in position.

   c. Insert screw (with captive washer) through clutch inspection cover and thread it into the top cover screw hole.

   d. Start the remaining four screws (with captive washers).

   e. Using a T27 TORX drive head, alternately tighten screws to 84-108 in-lbs (9.5-12.2 Nm).

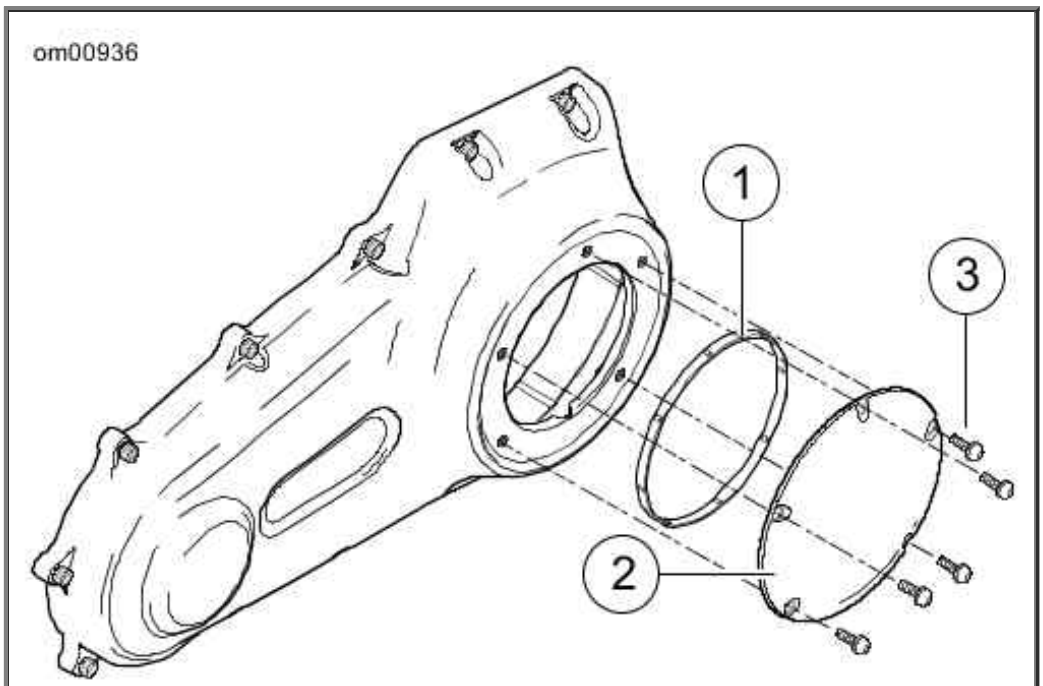

1. Gasket
2. Clutch inspection cover
3. Screws with captive washer

Clutch Cover

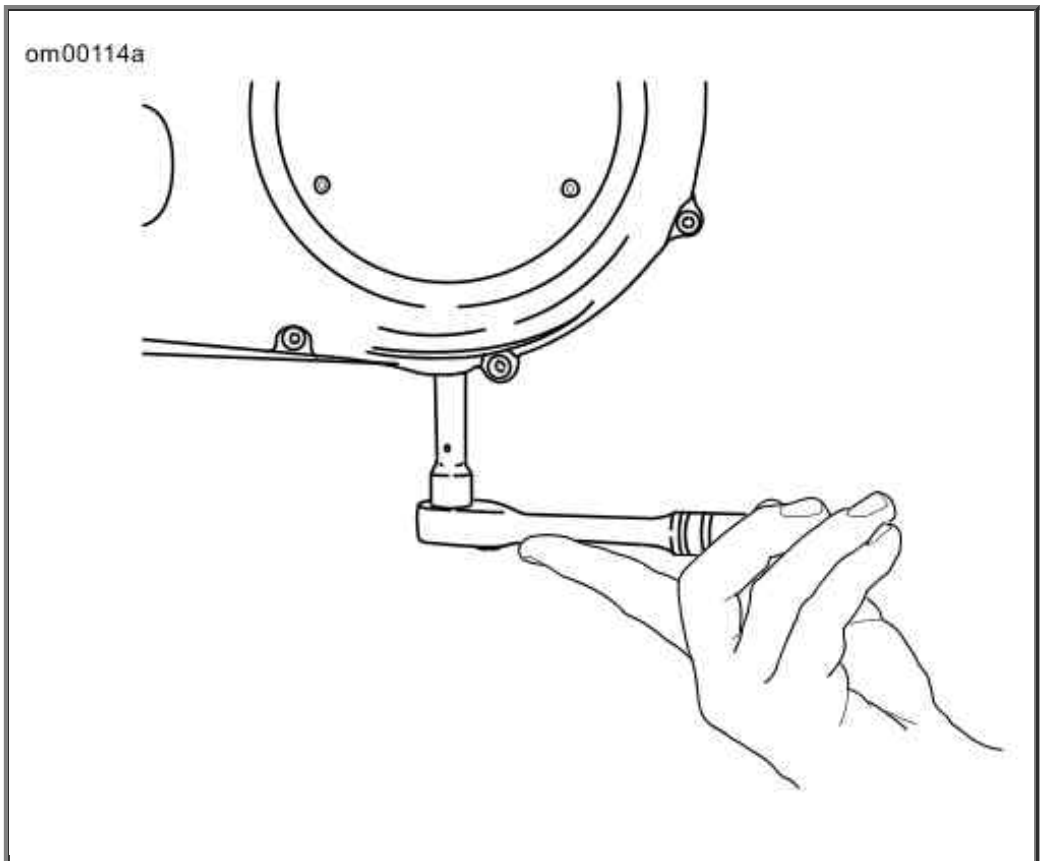

Removing Chaincase Drain Plug

Rear Drive Belt: FXSTSSE3

General

The inner tooth surface of the secondary belt has a thin coating of polyethylene lubricant. During initial operation, this coating will wear off as it is burnished into the belt fabric. This is a normal condition and not an indication of belt wear.

Refer to Regular Service Intervals: 2009 FXSTSSE3. Belt tension is set at the factory and should be checked after the first 1000 miles 1600 kilometers and at proper intervals thereafter.

Checking Deflection

See Check Belt Deflection. Check belt deflection at the loosest spot in the belt with the transmission in neutral and the motorcycle at ambient temperature. Use the BELT TENSION GAUGE HD-35381-A to apply 10 lbs. 4.5 kg of force at the midpoint of the bottom belt strand with motorcycle resting on jiffy stand.

Belt deflection should be within 1/4-5/16 in. 6.4-7.9 mm . If belt tension adjustment is necessary, see a Harley-Davidson dealer or follow the instructions given in the applicable Service Manual.

⚠WARNING

Be sure wheel and brake caliper are aligned. Riding with a misaligned wheel or brake caliper can cause the brake disc to bind and lead to loss of control, which could result in

death or serious injury. (00050a)

Check rear brake caliper position on rear brake disc. Disc should run true within brake caliper.

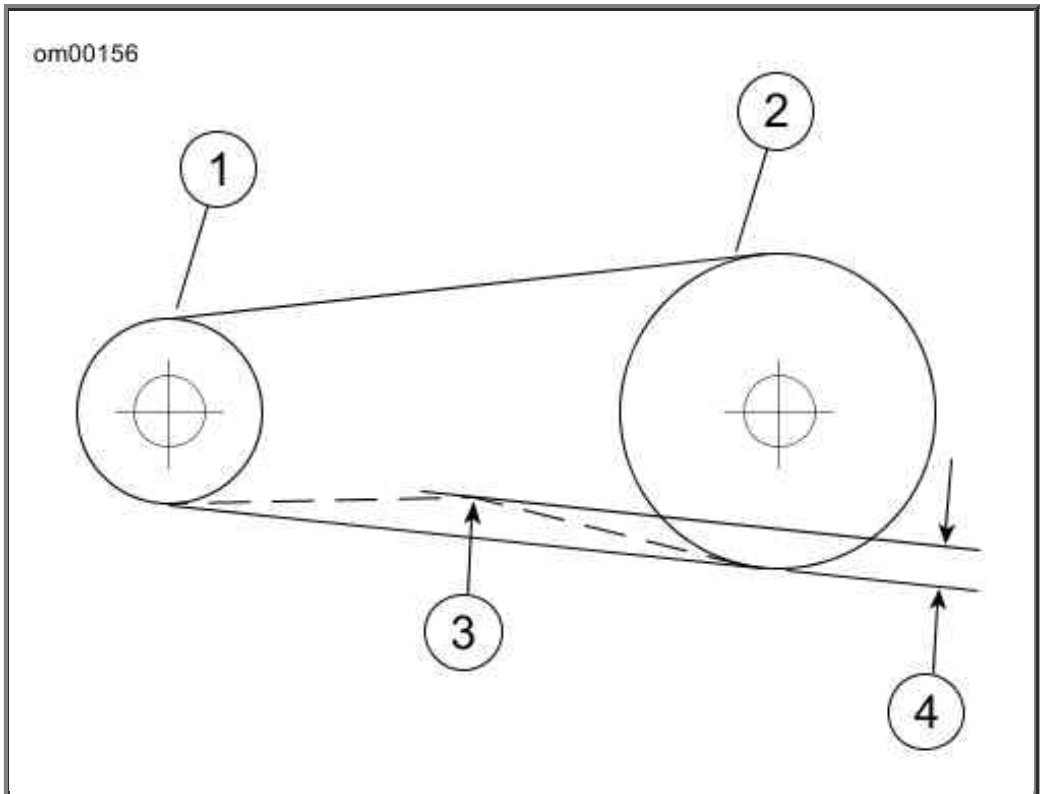

1. Transmission sprocket
2. Rear wheel sprocket
3. Force
4. Deflection of belt

Check Belt Deflection

Chassis Lubrication

Refer to Regular Service Intervals: 2009 FXSTSSE3 for all maintenance schedules.

CAUTION

Do not switch lubricant brands indiscriminately because some lubricants interact chemically when mixed. Use of inferior lubricants can damage the engine. (00184a)

1. Use recommended special purpose grease for steering head bearings. Use a multipurpose chassis grease for other applications.
2. Remove and lubricate handlebar throttle control grip sleeve with fresh graphite at proper intervals.
3. Lubricate throttle control cables and clutch control cable at proper intervals.
4. Lubricate front brake hand lever and clutch control hand lever only if necessary.
5. Inspect rear fork pivot shaft bearings.

6. Pack the steering head bearings with fresh grease at proper intervals.
7. Lubricate the jiffy stand mechanism with LOCTITE AEROSOL ANTI-SEIZE at proper intervals.

NOTE:

For model specific information regarding the chassis lubrication, refer to the appropriate Service Manual or see a Harley-Davidson dealer.

Oil Applications

Refer to Regular Service Intervals: 2009 FXSTSSE3 for all control connections and parts. Vehicle should be oiled at regular intervals, particularly after washing motorcycle or driving in wet weather.

Fuel Filter

Fuel injected motorcycles have a fuel filter attached to the fuel pump.

NOTE:

For model specific information regarding fuel filter maintenance, refer to the appropriate Service Manual or see a Harley-Davidson dealer.

Hydraulic Clutch

The clutch is hydraulically actuated. Squeezing the left hand lever causes the clutch master cylinder to apply pressure to the clutch actuation cylinder mounted in the transmission's right side cover. The actuation cylinder push rod extends and contacts the clutch release bearing to release the clutch.

Refer to Regular Service Intervals: 2009 FXSTSSE3. Check the fluid level as follows:

1. Stand the motorcycle upright (not leaning on the jiffy stand) on a level surface, turn handlebar so the top of the clutch master cylinder is level.
2. Clean all dirt and debris from the clutch master cylinder cover. Remove the two clutch master cylinder cover screws and remove the cover.
3. Verify the fluid level in the clutch master cylinder reservoir is at the FULL LEVEL mark at the top of the ledge on the rear inside wall of the reservoir. If the fluid level is low, add D.O.T. 4 BRAKE FLUID (Part No. 99953-99A) approved for clutch system use and available from your Harley-Davidson dealer.

   NOTE:

   Do not overfill the clutch master cylinder reservoir. As the clutch friction discs wear, the piston in the clutch cylinder will force fluid back into the reservoir which could cause fluid overflow.

CAUTION

D.O.T. 4 hydraulic brake fluid is used in the hydraulic

clutch. Do not use other types of fluids as they are not compatible and could cause equipment damage. (00353a)

CAUTION

Do not allow dirt or debris to enter the master cylinder reservoir. Dirt or debris in the reservoir can cause improper operation and equipment damage. (00205c)

⚠CAUTION

Direct contact of D.O.T. 4 brake fluid with eyes can cause irritation. Avoid eye contact. In case of eye contact flush with large amounts of water and get medical attention. Swallowing large amounts of D.O.T. 4 brake fluid can cause digestive discomfort. If swallowed, obtain medical attention. Use in well ventilated area. KEEP OUT OF REACH OF CHILDREN. (00240a)

CAUTION

D.O.T. 4 brake fluid will damage painted and body panel surfaces it comes in contact with. Always use caution and protect surfaces from spills whenever brake work is performed. Failure to comply can result in cosmetic damage. (00239b)

4. Inspect the clutch master cylinder cover gasket for rips, cuts, cracks, or other signs of damage. Replace the gasket if necessary. Carefully place the cover and cover gasket on the master cylinder reservoir and secure with the two cover screws. Tighten the screws to 6-8 in-lbs (0.68-0.90 Nm).

   NOTE:

   If the fluid level in the clutch master cylinder reservoir is correct but the clutch does not operate properly, refer to the service manual or see your Harley-Davidson dealer for service.

Hydraulic Lifters

The hydraulic lifters are self-adjusting. They automatically adjust length to compensate for engine expansion and valve mechanism wear. This keeps the valve mechanism free of lash when the engine is running.

When starting an engine which has been turned off even for a few minutes, the valve mechanism may be slightly noisy until the hydraulic units completely refill with oil. If at any time the valve mechanism becomes abnormally noisy, other than for a short period immediately after engine is started, it is an indication that one or more of the hydraulic units may not be functioning properly.

Always check the oil supply in the oil tank first since normal circulation of oil through the engine is necessary for proper operation of the hydraulic units.

If there is oil in the tank, the units may not be functioning properly because of dirt in the oil supply

passages leading to the lifter units. See a Harley-Davidson dealer for service.

Front Fork Bearings

⚠WARNING

Adjustments to front fork bearings should be performed by a Harley-Davidson dealer. Improperly adjusted bearings can adversely affect handling and stability, which could result in death or serious injury. (00051a)

Refer to Regular Service Intervals: 2009 FXSTSSE3. Check front fork for proper bearing adjustment and lubricate bearings at proper intervals.

With motorcycle front end raised off the floor, be sure front fork turns freely without any binding or interference and that there is no appreciable front to rear fork shake indicating excessive bearing looseness. Steering head bearings should be adjusted according to Service Manual procedure, if necessary.

Rear Fork Pivot Shaft

Refer to Regular Service Intervals: 2009 FXSTSSE3. Check the tightness of the rear fork pivot shaft fastener at proper intervals.

NOTE:

For model specific information regarding the rear fork pivot shaft, refer to the appropriate Service Manual or see a Harley-Davidson dealer.

Brakes

⚠WARNING

Inspect brake pads for wear at service maintenance intervals. If you ride under adverse conditions (steep hills, heavy traffic, etc.), inspect more frequently. Excessively worn brake pads can lead to brake failure, which could result in death or serious injury. (00052a)

NOTES:

- *Master cylinder cover specifies correct brake fluid.*
- *When adding or changing brake fluid, be sure to use only the type specified for your motorcycle.*
- *Use only Harley-Davidson D.O.T. 4 HYDRAULIC BRAKE FLUID (Part No. 99953-99A).*
- *Do not mix D.O.T. 4 with D.O.T. 5 brake fluid.*

1. Refer to Regular Service Intervals: 2009 FXSTSSE3. Check brake pads and brake discs for wear at proper intervals.

2. Check the fluid level in the master cylinder reservoirs at proper intervals.

3. If level is low, clean dirt and debris from reservoir cover before removing.

CAUTION

D.O.T. 4 brake fluid will damage painted and body panel surfaces it comes in contact with. Always use caution and protect surfaces from spills whenever brake work is performed. Failure to comply can result in cosmetic damage. (00239b)

⚠CAUTION

Direct contact of D.O.T. 4 brake fluid with eyes can cause irritation. Avoid eye contact. In case of eye contact flush with large amounts of water and get medical attention. Swallowing large amounts of D.O.T. 4 brake fluid can cause digestive discomfort. If swallowed, obtain medical attention. Use in well ventilated area. KEEP OUT OF REACH OF CHILDREN. (00240a)

4. Add D.O.T. 4 HYDRAULIC BRAKE FLUID (Part No. 99953-99A) if necessary.

NOTE:

Use only D.O.T. 4 HYDRAULIC BRAKE FLUID (Part No. 99953-99A) approved for brake system use and available from your Harley-Davidson dealer.

Harley-Davidson has provided your new motorcycle with the optimum brake pad friction material available. It is selected to give the best performance possible under dry, wet and high operating temperature conditions. It exceeds all regulatory requirements currently in effect. However, during some braking conditions you may experience noise. This is normal for this friction material.

⚠WARNING

Brakes are a critical safety component. Contact a Harley-Davidson dealer for brake repair or replacement. Improperly serviced brakes can adversely affect brake performance, which could result in death or serious injury. (00054a)

See Brake Friction Material: FXSTSSE3. Visual inspection of brake pads can be made without removing the caliper. View the lower area of each caliper with a flashlight.

⚠WARNING

Perform routine scheduled brake maintenance. Lack of maintenance at recommended intervals can adversely affect brake performance, which could result in death or serious injury. (00055a)

⚠WARNING

Always replace brake pads in complete sets for correct

and safe brake operation. Improper brake operation could result in death or serious injury. (00111a)

NOTES:

- *If the brake pad friction material is 0.04 in. 1.02 mm thick or less, the pads must be replaced immediately.*
- *Always replace brake pads in pairs.*

The rear brake outer pad on all models can be measured from the caliper bracket side using a thin plastic 6.0 in. 152.4 mm rule. Place the rule against the brake disc through the space alongside the caliper.

The outer surface of the brake pad backing plate should measure 0.04 in. 1.02 mm or more away from the brake disc.

NOTE:

Replace pads if brake friction material is 0.04 in. 1.02 mm or less above the backing plate.

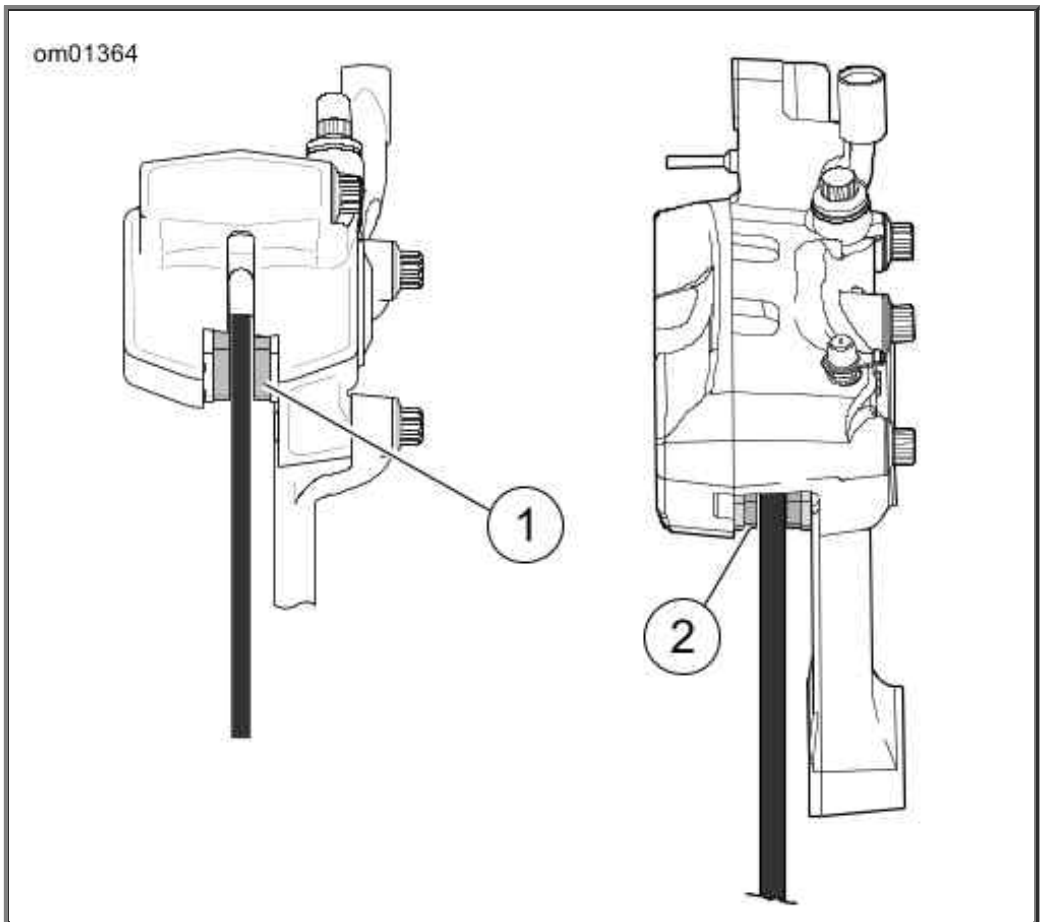

1. Front brake
2. Rear brake

Brake Friction Material: FXSTSSE3

Tires

See Specifications: 2009 FXSTSSE3 for tire pressures and sizes.

- Be sure to keep tires properly inflated.
- Follow tire data for correct cold tire inflation pressures.
- Check before riding when tires are cold.

- Do not over-inflate tires.

⚠WARNING

Do not inflate tire beyond maximum pressure as specified on sidewall. Over inflated tires can blow out, which could result in death or serious injury. (00027a)

⚠WARNING

Match tires, tubes, air valves and caps to the correct wheel rim. Contact a Harley-Davidson dealer. Mismatching can result in damage to the tire bead, allow tire slippage on the rim or cause tire failure, which could result in death or serious injury. (00023a)

Check inflation pressure and inspect tread for punctures, cuts, breaks, etc., at least weekly if in daily use. Check before each trip if used occasionally.

⚠WARNING

Be sure tires are properly inflated, balanced and have adequate tread. Inspect your tires regularly and see a Harley-Davidson dealer for replacements. Riding with excessively worn, unbalanced or under-inflated tires can adversely affect stability and handling, which could result in death or serious injury. (00014a)

Same as original equipment tires should be used. Other tires may not fit correctly, could adversely affect handling, and may be hazardous to use.

⚠WARNING

Tires are a critical safety component. Contact a Harley-Davidson dealer for tire repair or replacement. Improper tire service can adversely affect stability and handling, which could result in death or serious injury. (00057a)

⚠WARNING

Replace punctured or damaged tires. In some cases, small punctures in the tread area may be repaired from within the demounted tire by a Harley-Davidson dealer. Speed should NOT exceed 50 mph (80 km/h) for the first 24 hours after repair, and the repaired tire should NEVER be used over 80 mph (130 km/h). Failure to follow this warning could result in death or serious injury. (00015a)

⚠WARNING

Striking an object, such as a curb, can cause internal tire damage. If an object is struck, remove and inspect both the inside and outside of the tire. A damaged tire can adversely affect stability and handling, which could result in death or serious injury. (00058a)

Inspection

⚠WARNING

Harley-Davidson tires are equipped with wear bars that run horizontally across the tread. When wear bars become visible and only 1/32 in. (0.8 mm) tread depth remains, replace tire immediately. Using a worn tire can adversely affect stability and handling, which could result in death or serious injury. Use only Harley-Davidson approved replacement tires. (00090b)

See Tire Sidewall Wear Bar Locator. Arrows on tire sidewalls pinpoint location of wear bar indicators.

Tread wear indicator bars will appear on tire tread surfaces when 1/32 in. 0.8 mm or less of tire tread remains. See Wear Bar Appearance. Always replace tires before the tread wear indicator bars appear.

When To Replace Tires

New tires are needed if any of the following conditions exist:

1. Tread wear indicator bars become visible on the tread surfaces.
2. Tire cords or fabric become visible through cracked sidewalls, snags or deep cuts.
3. A bump, bulge or split in the tire.
4. Puncture, cut or other damage to the tire that cannot be repaired.

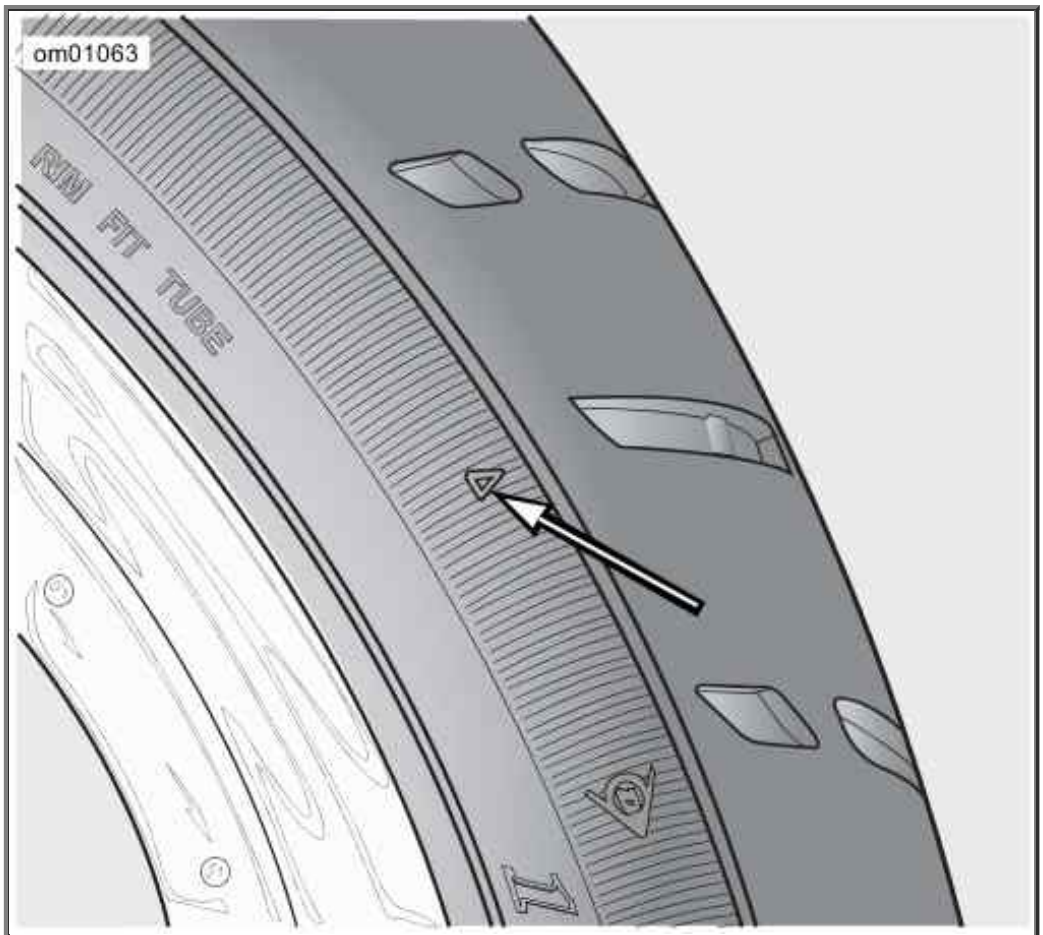

Tire Sidewall Wear Bar Locator

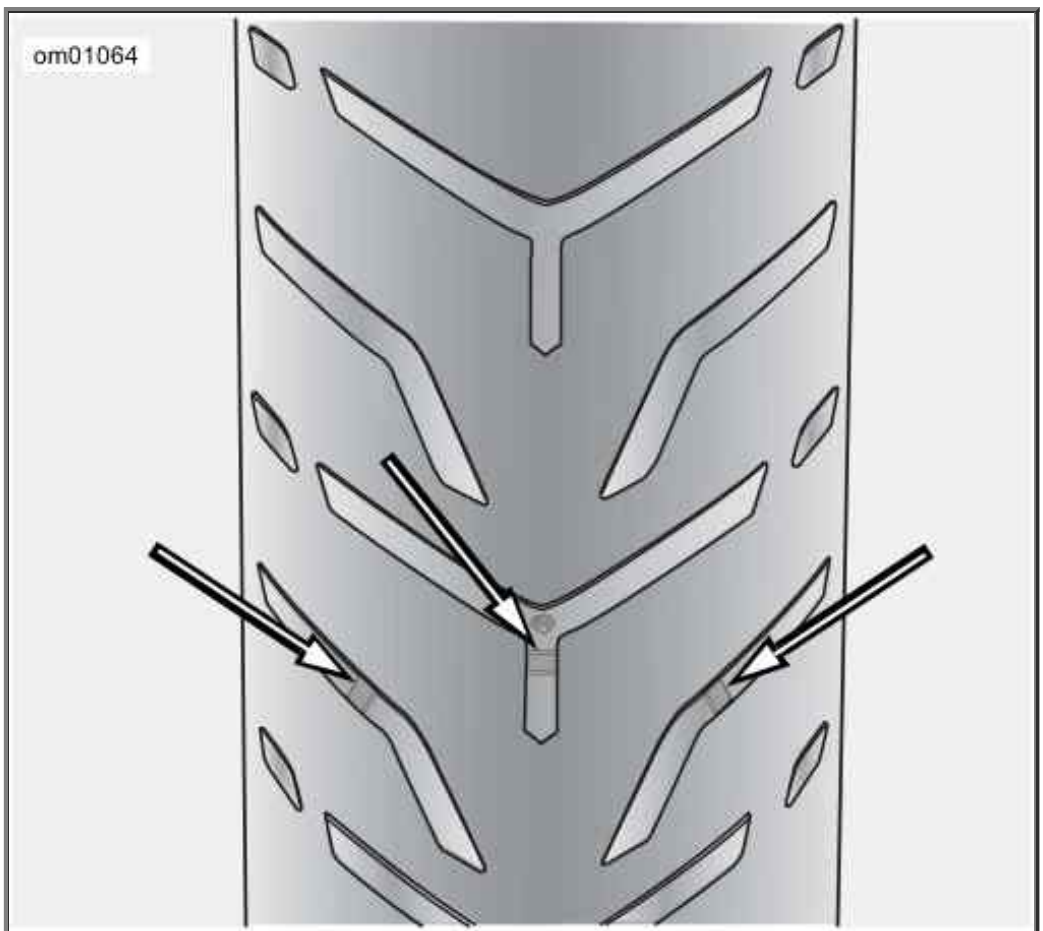

Wear Bar Appearance

Shock Absorbers

Refer to Regular Service Intervals: 2009 FXSTSSE3. Inspect shock absorbers and rubber bushings for leaks and bushing deterioration at proper intervals.

Spark Plugs

Refer to Regular Service Intervals: 2009 FXSTSSE3. Check the spark plugs at proper intervals.

⚠CAUTION

Do NOT pull on any electrical wires. Pulling on electrical wires may damage the internal conductor causing high resistance, which may result in minor or moderate injury. (00168a)

Disconnect spark plug cables from plugs by pulling on the molded connector caps. To reconnect, simply snap-on spark plug cables to tops of spark plugs.

Refer to Ignition System: 2009 FXSTSSE3 before servicing spark plugs.

1. Check spark plug type. Only use those spark plugs specified for your model motorcycle.
2. Check spark plug gap against table specifications.
3. Always tighten to the proper torque. Spark plugs must be tightened to the torque specified for proper heat transfer.

NOTE:

If a torque wrench is not available, tighten plugs finger tight and then tighten an additional one quarter turn with a spark plug wrench.

Ignition

The engine in your motorcycle has been designed specifically to achieve optimum fuel economy within exhaust emission controls. Factory programmed ignition characteristics provide maximum engine performance and driveability.

Air Cleaner

Refer to Regular Service Intervals: 2009 FXSTSSE3. Inspect filter element at proper intervals and service as required. Under dusty conditions, inspect more often.

CAUTION

Install air filter before running engine. Failure to do so can draw debris into the engine and could result in engine damage. (00207a)

Domestic Models

See Air Cleaner. On domestic models, the high flow air cleaner has a cotton gauze filter element and water resistant rain sock. Slip the rain sock over the filter element under wet or rainy conditions. Use the following instructions to clean the high flow air cleaner.

NOTES:

- *The use of cleaning, drying or oiling methods or products other than those shown will damage the filter and void the manufacturer's warranty.*
- *K&N Air Filter Cleaner is available from a Harley-Davidson Dealer, either alone (1 qt/0.95 L sprayer bottle, Part Number 99883-88T) or a 12 fl oz/0.35 L sprayer bottle as part of the Filter Care Service Kit (Part Number 99850-92T).*
- *K&N Air Filter Oil is also available from a Harley-Davidson Dealer, either alone (12.25 oz/ 347 gram aerosol can, Part Number 99882-88T) or a 6.5 oz/ 184 gram aerosol can as part of the Filter Care Service Kit.*
- *DO NOT OVER-OIL THE AIR FILTER. Over-oiling may interfere with the proper performance of the engine and/ or certain engine components. If oil is still draining or dripping from the filter media twenty minutes after oiling, re-clean and re-oil the filter element.*

1. Loosen the hose clamp retaining the air filter element assembly to the air tube. Separate the element from the air tube.

2. Tap the element to dislodge any loose dirt, then gently brush with a soft bristle brush.

3. Spray air filter cleaner liberally onto the cotton filter media and let soak for ten minutes, OR roll or soak the cotton filter media in a shallow pan of air filter cleaner. Remove immediately, and let soak for ten minutes.

4. Rinse off the filter media (flowing from the clean side to the dirty side), with low-pressure tap water.

5. After rinsing, shake off all excess water, and let the filter media air-dry naturally. DO NOT use compressed air or a heat gun to speed drying.

6. After the filter media is **completely** dry, EITHER spray air filter oil along each pleat, once only, holding the spray nozzle approximately 3 inches 76 mm away from the media, OR carefully use a squeeze bottle to deposit oil along each pleat, once only. **Let the oil wick (absorb) into the filter media for twenty minutes before proceeding.**

7. After twenty minutes, inspect the filter media, and carefully apply oil to any remaining visible white spots on the filter media, and allow to absorb.

8. Slip the air filter element onto the intake tube approximately 5/8 inch 16 mm . Tighten the clamp around the filter element flange to 30-40 in-lbs (3.4-4.5 Nm).

International Models

See Air Cleaner: International Models. On international models, wash air filter element in luke warm water with a mild detergent. Do not use air cleaner filter oil on the element.

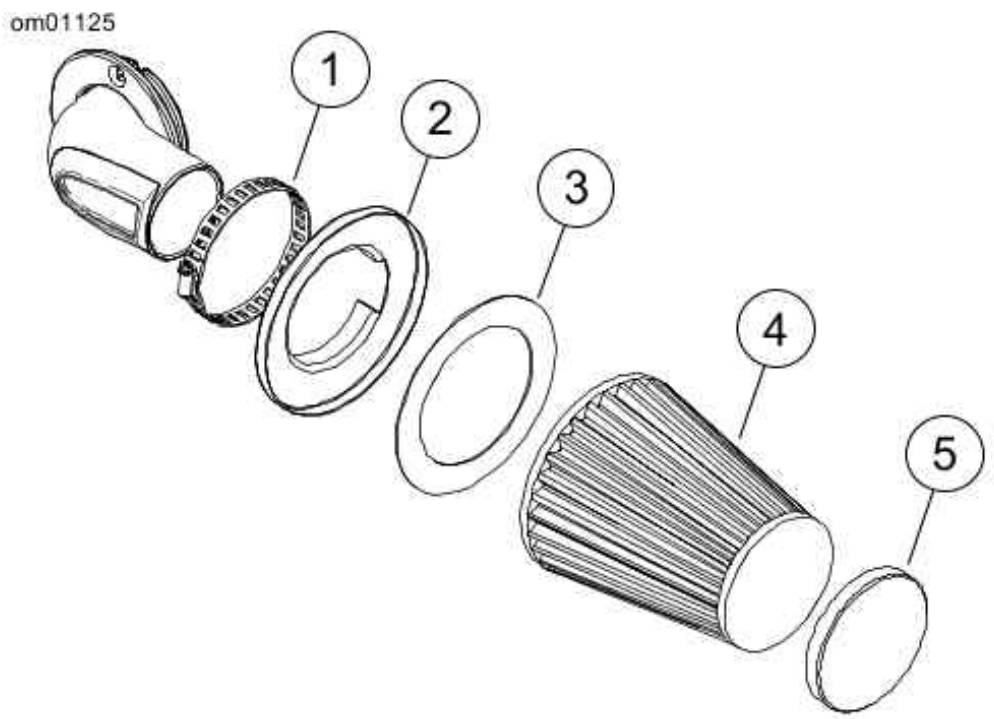

1. Clamp
2. Backplate
3. Gasket
4. Filter element
5. Cap

Air Cleaner

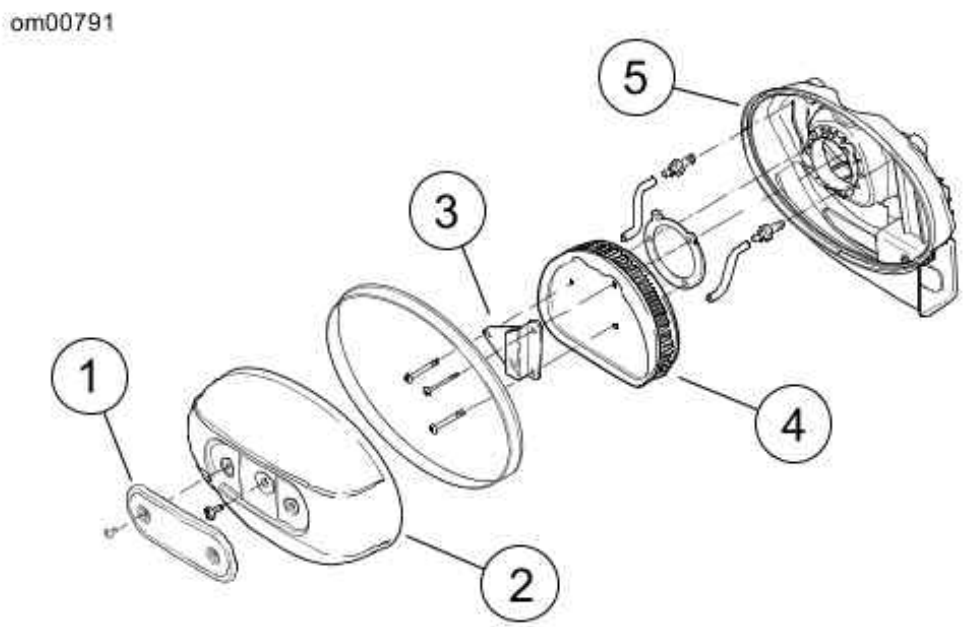

1. Insert
2. Cover
3. Bracket
4. Filter element
5. Backplate

Air Cleaner: International Models

Headlamp

See Headlamp Bulb: FXSTSSE3. The headlamp assembly uses replaceable quartz halogen bulb(s).

Refer to Bulb Chart: 2009 FXSTSSE3 for bulbs. See a Harley-Davidson dealer or service manual for bulb replacement.

CAUTION

When replacement is required, use only the specified sealed beam unit or bulb, available from a Harley-Davidson dealer. An improper wattage sealed beam or bulb, can cause charging system problems. (00209a)

CAUTION

Never touch the quartz bulb. Fingerprints will etch the glass and decrease bulb life. Grab the bulb with paper or a clean, dry cloth. Failure to do so could result in bulb damage. (00210a)

⚠WARNING

Handle bulb carefully and wear eye protection. Bulb contains gas under pressure, which, if not handled carefully, could cause serious eye injury. (00062b)

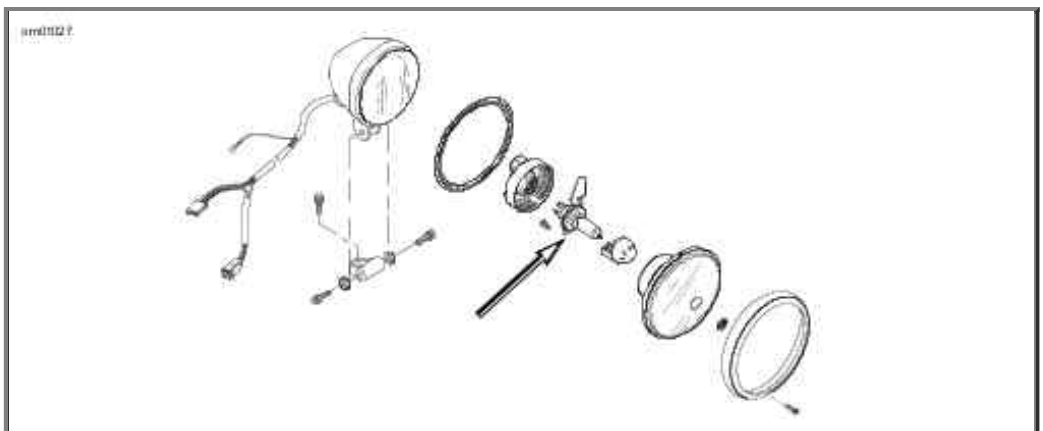

Headlamp Bulb: FXSTSSE3

Headlamp Alignment

⚠WARNING

The automatic-on headlamp feature provides increased visibility of the rider to other motorists. Be sure headlamp is on at all times. Poor visibility of rider to other motorists can result in death or serious injury. (00030b)

NOTE:

Vehicles with multiple beam headlamps that are individually aimed should be adjusted so both lamps converge into one pattern.

1. Verify that front and rear tire inflation pressures are correct and that suspension is adjusted to the weight of the principal rider. See Maintenance and Lubrication.

2. Fill fuel tank or add ballast to equal the weight of the fuel needed.

   NOTE:

   See Headlamp Alignment. To aid in properly placing the motorcycle, a perpendicular line (1) can be drawn on the floor. For best results, choose an area with minimum light.

3. See Headlamp Alignment. Draw a vertical line (2) on the wall.

4. Position motorcycle so that front axle is 25 feet 7.6 meters from wall.

   NOTE:

   As the weight of the rider will compress the suspension slightly, have a person whose weight is approximately the same as that of the principal rider sit on the motorcycle.

5. With the vehicle laden and upright, point the front wheel straight forward at wall and measure the distance (4) from the floor to the center of the HIGH BEAM bulb.

6. Draw a horizontal line (5) through the vertical line on the wall that is 2.1 in. 53.3 mm lower than the measured bulb centerline.

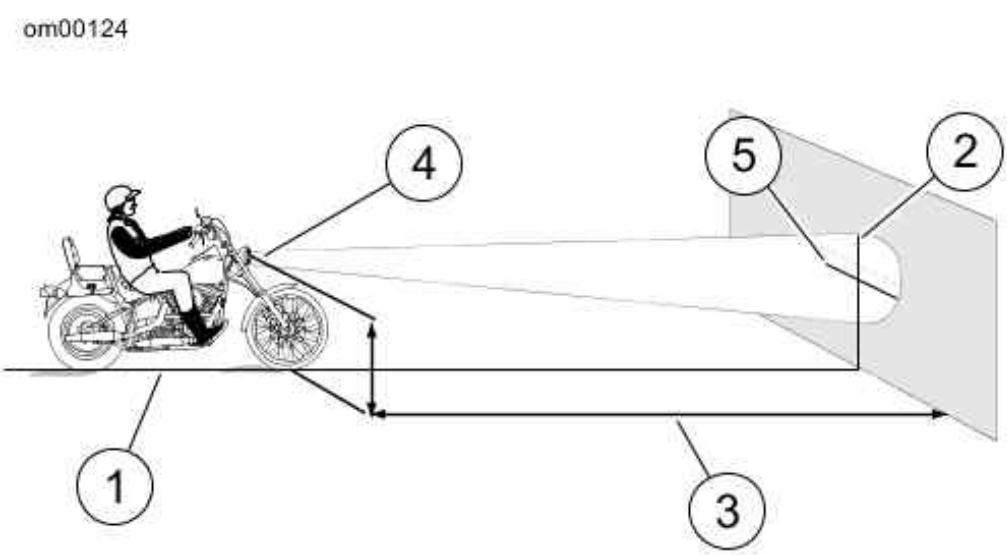

1. Perpendicular line
2. Vertical line
3. 25 feet (7.6 meters)
4. High beam bulb centerline
5. Horizontal line 2.1 in. (53.3 mm) lower than bulb centerline

Headlamp Alignment

NOTE:

As the weight of the rider will compress the suspension slightly, have a person whose weight is approximately the same as that of the principal rider sit on the motorcycle.

7. See Headlamp Alignment. Verify headlamp alignment. Turn the ignition switch to IGNITION and set the headlamp switch to HIGH beam.

a. The center of the hot spot (brightest area of light beam) should be centered where the two lines intersect.

b. Adjust headlamp alignment if necessary.

Headlamp Adjustment: FXSTSSE3

1. See Headlamp Adjustment: FXSTSSE3. Loosen the horizontal headlamp adjustment screw (1). Tilt headlamp left or right to direct light beam straight ahead.
2. Tighten horizontal adjustment screw to 25-35 ft-lbs (33.9-47.5 Nm).
3. Loosen vertical adjustment screws (2). Tilt headlamp up or down in relationship to the horizontal line from the headlamp alignment inspection.
4. Tighten both vertical adjustment screws to 25-35 ft-lbs (33.9-47.5 Nm).

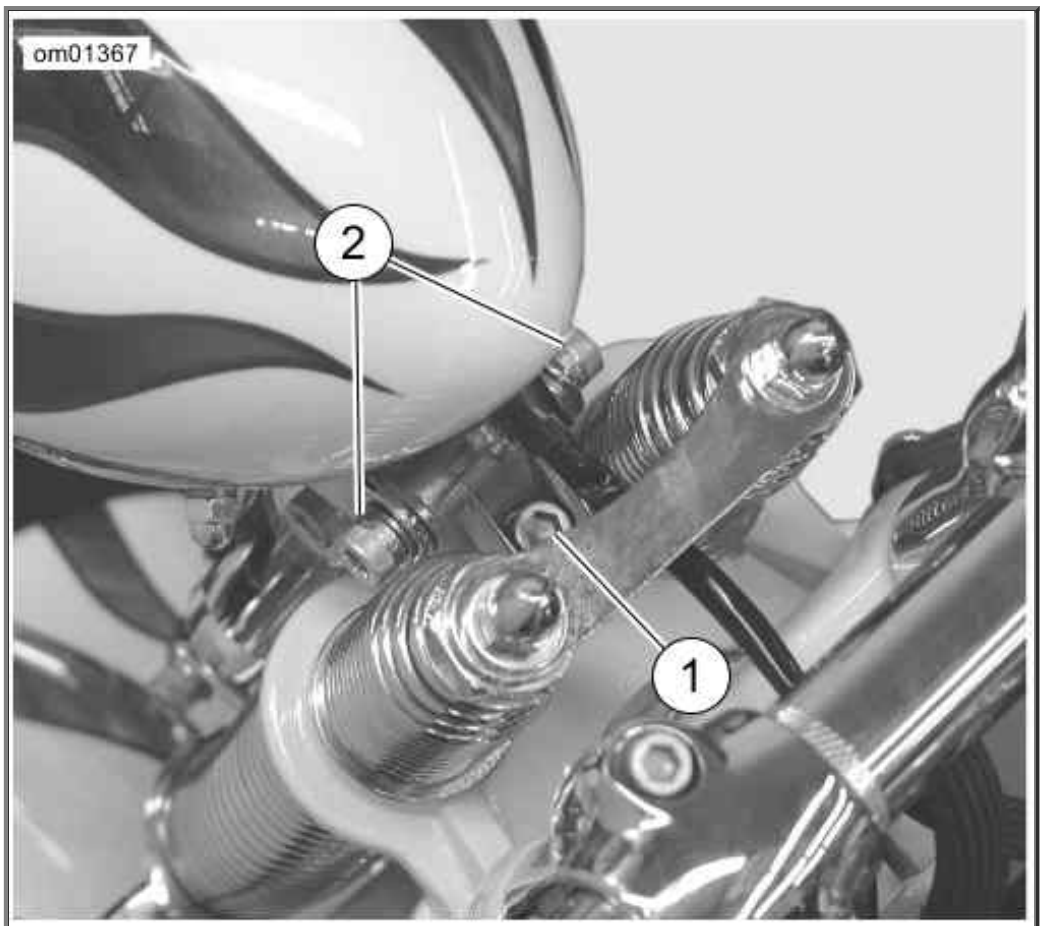

1. Horizontal adjustment screw
2. Vertical adjustment screws

Headlamp Adjustment: FXSTSSE3

Turn Signal Bulb Replacement: Bullet Style

1. See Lens Cap Notch. Insert the blade of a small screwdriver (or a coin) into the notch at the bottom of the lens cap. Carefully twist until the lens cap pops out of the lamp housing.
2. Push in bulb and rotate counterclockwise to remove bulb from socket.
3. Inspect condition of electrical contacts in socket. If necessary, clean with a small wire brush

and electrical contact cleaner.

4. Liberally apply dielectric grease to contacts in socket and at bottom of **new** bulb.
5. Orient index pins on **new** bulb with pin guides inside bulb socket.
6. Push bulb in and turn clockwise to lock in place.
7. Snap lens cap back into the lamp holder. Rotate lens to position notch at bottom of lamp.

NOTE:

If the turn signal or running lamp will not light after replacing a bulb, check the wiring, the ground at the socket and/or the switch.

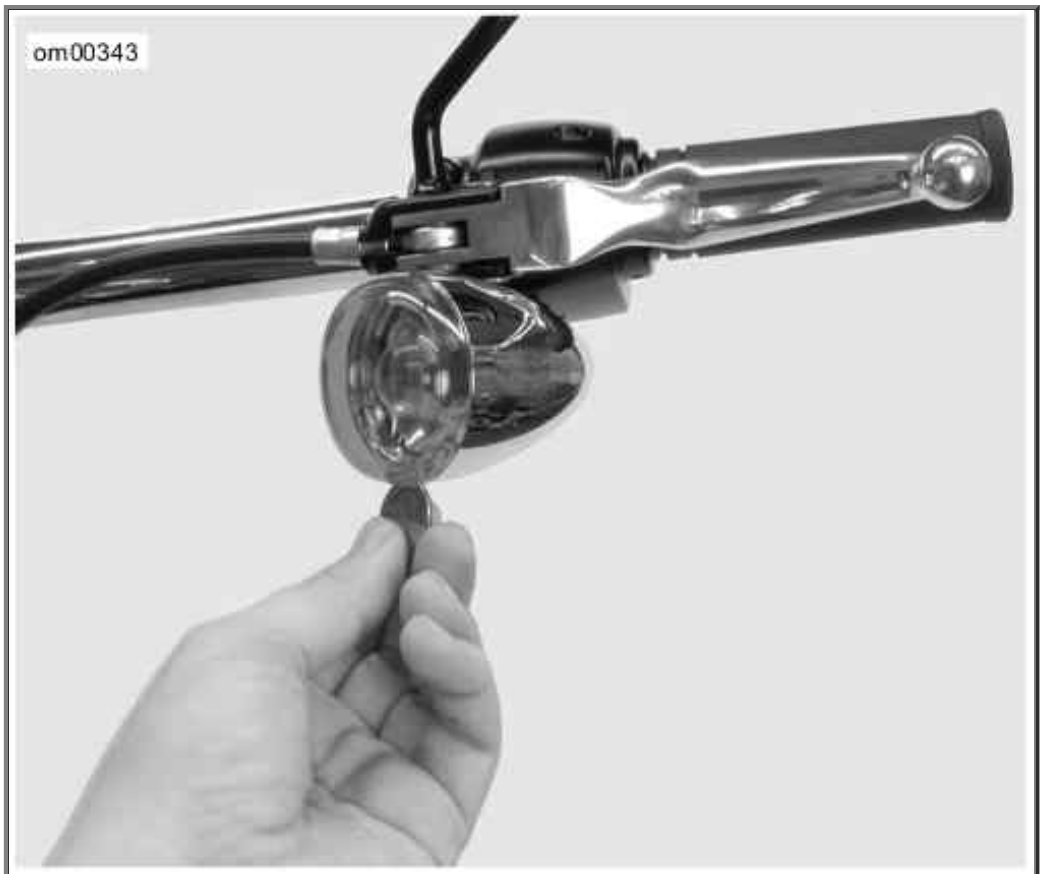

Lens Cap Notch

Seat: FXSTSSE3

General

See Seat Tongue and Frame Back. The FXSTSSE3 has a tongue underneath the seat that slides into a slot in the back end of the frame.

Removal

1. See Seat: FXSTSSE3. Remove the knurled seat mounting thumbscrew and plastic washer from top of rear fender.
2. See Seat Tongue. Push seat rearward to free tongue at front of seat from slot in frame

back.

3. Lift front of seat up and slide seat forward through the strap.

Installation

1. Place the rear portion of the seat under the seat strap and slide the seat toward the rear of the motorcycle.
2. Slide seat toward front of motorcycle to engage the tongue into the slot in the frame back.
3. Install seat mounting thumbscrew.

⚠WARNING

After installing seat, pull upward on seat to be sure it is locked in position. While riding, a loose seat can shift causing loss of control, which could result in death or serious injury. (00070b)

4. Pull up on seat to verify that it is properly secured.

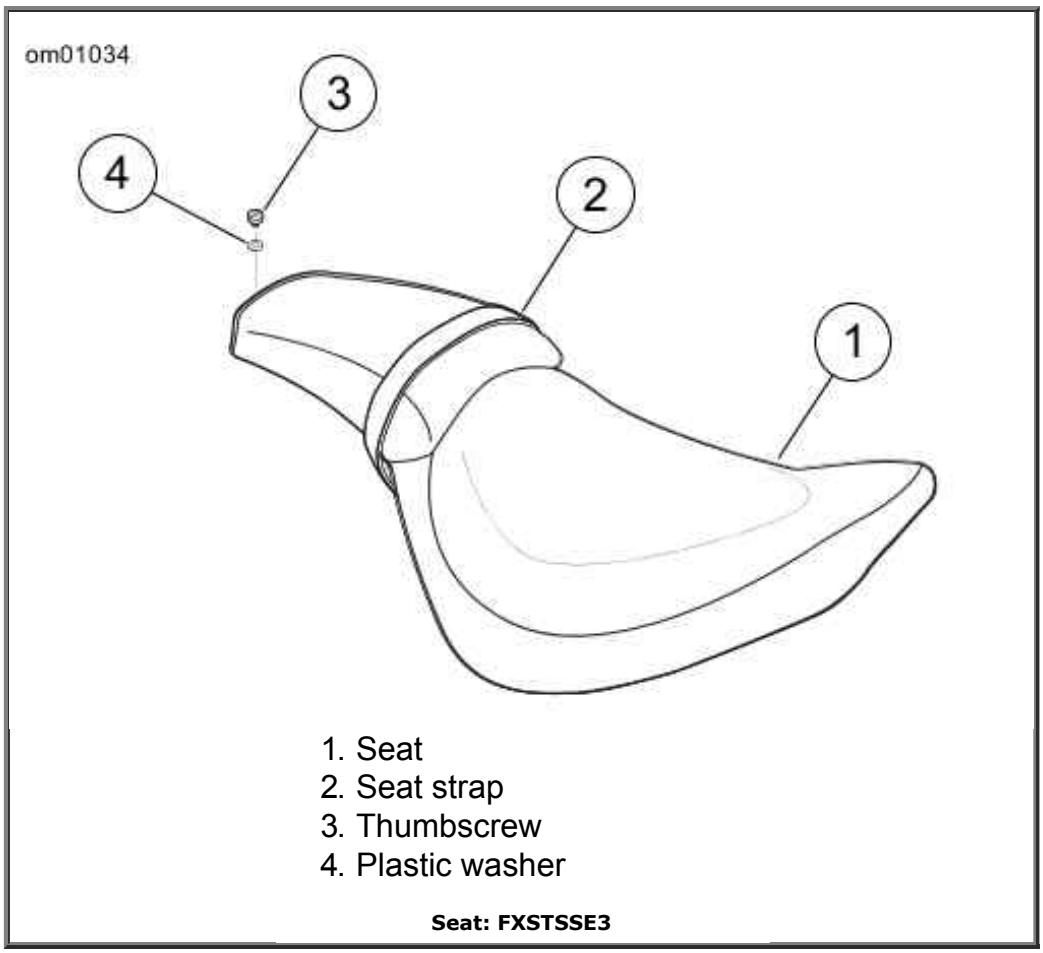

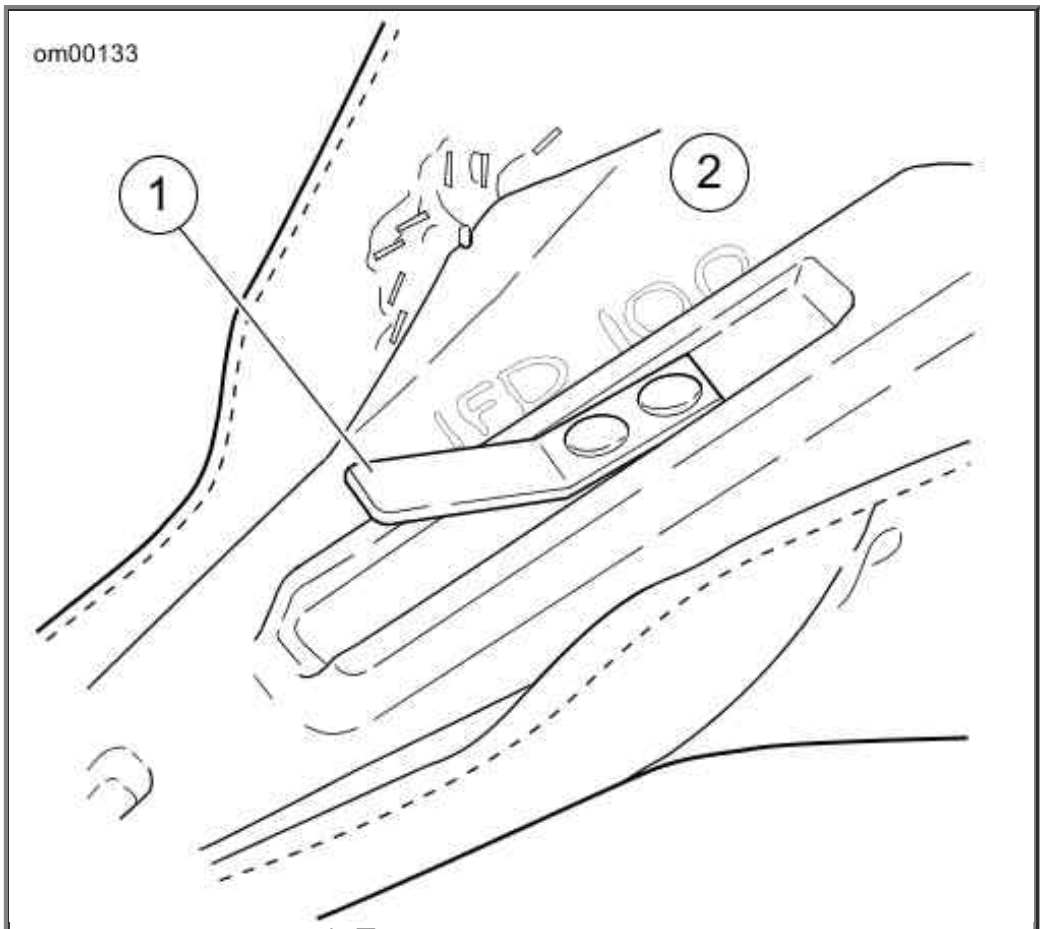

1. Tongue
2. Seat bottom

Seat Tongue

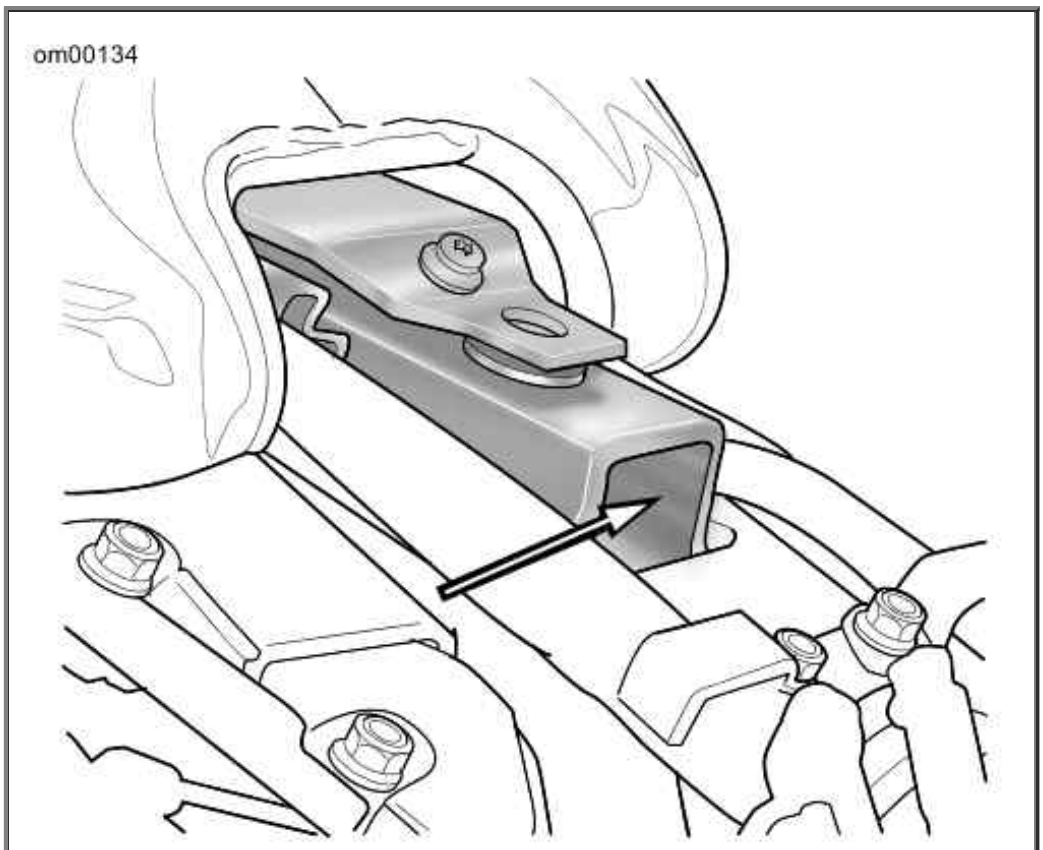

Frame Back

LED Tail Lamp

The tail lamp contains no replaceable bulbs. Refer to the service manual for removal and installation of the tail lamp.

Alternator/Voltage Regulator

Charging Rate

The alternator output is controlled and changed to direct current by the voltage regulator.

- The voltage regulator increases charging rate when battery is low or lamps are lit.
- The voltage regulator decreases charging rate when battery charge is up.

CAUTION

It is possible to overload your motorcycle's charging system by adding too many electrical accessories. If your combined electrical accessories operating at any one time consume more electrical current than your vehicle's charging system can produce, the electrical consumption can discharge the battery and cause vehicle electrical system damage. See a Harley-Davidson dealer for advice about the amount of current consumed by additional electrical accessories, or for necessary wiring changes. (00211b)

A battery voltage LED in the instruments will light up when voltage is either too low or too high.

NOTES:

- *This unit requires no interval attention. If any electrical system trouble is experienced that might be traceable to the alternator or voltage regulator, the motorcycle should be taken to a Harley-Davidson dealer who has the necessary electrical testing equipment to give the required attention.*
- *For model specific information regarding the voltage regulator, refer to the appropriate Service Manual or see a Harley-Davidson dealer.*

Battery: General

Type

Your motorcycle uses a permanently sealed, maintenance-free, lead/calcium and sulfuric acid battery. All batteries are shipped precharged and ready to be put into service. Do not attempt to open the battery for any reason.

Antidotes for Battery Acid

CONTACT	TREATMENT
External	Flush with water.
Internal	Drink large quantities of milk or water, followed by milk of magnesia, vegetable oil

	or beaten eggs. Get immediate medical attention.
Eyes	Flush with water. Get immediate medical attention.

⚠WARNING

Batteries contain sulfuric acid, which could cause severe burns to eyes and skin. Wear a protective face shield, rubberized gloves and protective clothing when working with batteries. KEEP BATTERIES AWAY FROM CHILDREN. (00063a)

⚠WARNING

Explosive hydrogen gas, which escapes during charging, could cause death or serious injury. Charge battery in a well-ventilated area. Keep open flames, electrical sparks and smoking materials away from battery at all times. KEEP BATTERIES AWAY FROM CHILDREN. (00065a)

⚠WARNING

Batteries, battery posts, terminals and related accessories contain lead and lead compounds, and other chemicals known to the State of California to cause cancer, and birth defects or other reproductive harm. Wash hands after handling. (00019e)

⚠WARNING

Never remove warning label attached to top of battery. Failure to read and understand all precautions contained in warning, could result in death or serious injury. (00064a)

1. Contents are corrosive
2. Wear safety glasses
3. Contents are explosive
4. Keep flames away
5. Read instructions
6. Keep away from children

Battery Warning Label

Battery Warning Label

Voltmeter Test

Refer to Voltmeter Test. The voltmeter test provides a general indicator of battery condition. Check the voltage of the battery to verify that it is in a 100 percent fully charged condition. If the open circuit (disconnected) voltage reading is below 12.6V, charge the battery and then re-check the voltage after the battery has set for one to two hours.

Voltmeter Test

READING IN VOLTS	PERCENT OF CHARGE
12.7	100
12.6	75
12.3	50
12.0	25
11.8	0

Cleaning and Inspection

Battery top must be clean and dry. Dirt and electrolyte on top of the battery can cause battery to self-discharge.

1. Clean battery top.
2. Clean cable connectors and battery terminals using a wire brush or fine grit sandpaper to remove any oxidation.
3. Inspect and clean the battery screws, clamps and cables. Check for breakage, loose connections and corrosion.
4. Check the battery posts for melting or damage caused by overtightening.
5. Inspect the battery for discoloration, a raised top or a warped or distorted case. This might indicate that the battery has been frozen, overheated or overcharged.
6. Inspect the battery case for cracks or leaks.

Charging

Never charge a battery without first reviewing the instructions for the charger being used. In addition to the manufacturer's instructions, follow these general safety precautions.

Charge the battery if any of the following conditions exist:

- Vehicle lamps appear dim.
- Electric starter sounds weak.
- Battery has not been used for an extended period of time.

⚠WARNING

Explosive hydrogen gas, which escapes during charging, could cause death or serious injury. Charge battery in a well-ventilated area. Keep open flames, electrical sparks and smoking materials away from battery at all times. KEEP BATTERIES AWAY FROM CHILDREN. (00065a)

⚠WARNING

Batteries contain sulfuric acid, which could cause severe burns to eyes and skin. Wear a protective face shield, rubberized gloves and protective clothing when working with batteries. KEEP BATTERIES AWAY FROM CHILDREN. (00063a)

1. Perform a voltmeter test to determine the state of charge. If battery needs to be charged, proceed to the next step.

2. Place the battery on a level surface.

⚠WARNING

Unplug or turn OFF battery charger before connecting charger cables to battery. Connecting cables with charger ON can cause a spark and battery explosion, which could result in death or serious injury. (00066a)

⚠WARNING

Connect positive (+) battery cable first. If positive (+) cable should contact ground with negative (-) cable connected, the resulting sparks can cause a battery explosion, which could result in death or serious injury. (00068a)

⚠WARNING

Disconnect negative (-) battery cable first. If positive (+) cable should contact ground with negative (-) cable connected, the resulting sparks can cause a battery explosion, which could result in death or serious injury. (00049a)

CAUTION

Do not reverse the charger connections described in the following steps or the charging system of the motorcycle could be damaged. (00214a)

NOTES:

- *The figures listed in the Amp-hour table assume that the battery is charging at room temperature. If warmer than room temperature, use a slightly shorter charging time. If colder, use a slightly longer charging time.*
- *The use of constant current chargers to charge sealed maintenance free batteries is not recommended. Any overcharge will cause dry-out and premature battery failure. If a constant current charger is the only type available, do not exceed the charge times listed in 19 Amp Hour Battery Charging Rates/Times and do not continue charging the battery if it gets hot. When charging, never exceed 15 volts.*

3. Connect the red battery charger lead to positive (+) terminal of the battery.
4. Connect the black battery charger lead to negative (-) terminal of the battery.

   NOTE:

   If the battery is still in the vehicle, connect the negative lead to the chassis ground. Make sure that the ignition and all electrical accessories are turned off.

5. Step away from the battery and turn on the charger.

⚠WARNING

Unplug or turn OFF battery charger before disconnecting charger cables from battery. Disconnecting clamps with charger ON can cause a spark and battery explosion, which could result in death or serious injury. (00067a)

6. After the battery is fully charged, turn OFF the charger and disconnect the black battery charger lead to the negative (-) terminal of the battery.
7. Disconnect the red battery charger lead to the positive (+) terminal of the battery.
8. Mark the charging date on the battery.

19 Amp Hour Battery Charging Rates/Times

READING (VOLTS)	PERCENT OF CHARGE	3 AMP CHARGER	6 AMP CHARGER	10 AMP CHARGER	20 AMP CHARGER
12.7	100	-	-	-	-
12.6	75	1 hour 50 minutes	55 minutes	30 minutes	15 minutes
12.3	50	3 hours 40 minutes	1 hour 50 minutes	1 hour 5 minutes	30 minutes
12.0	25	5 hours 15 minutes	2 hours 40 minutes	1 hours 35 minutes	45 minutes
11.8	0	7 hours	3 hours 30 minutes	2 hours 5 minutes	1 hour 5 minutes

Storage

CAUTION

Turn engine over a few times to be sure there is no oil in the crankcase and that all oil has been pumped back into

the oil tank. Stop engine and re-check oil level. Failure to do so can result in engine damage. (00071a)

CAUTION

Do not allow battery to completely discharge. The electrolyte in a discharged battery will freeze. The more discharged a battery is, the more easily it can freeze and crack the battery case. (00218a)

If the motorcycle will not be operated for several months, such as during the winter season, remove the battery from the motorcycle and fully charge.

If the motorcycle is to be stored with the battery installed, it will be necessary to connect a battery tender to maintain charge. See an authorized dealer for more information.

Self-discharge is a normal condition and occurs continuously. The rate of self-discharge depends on the ambient temperature and the battery's state of charge.

- Batteries discharge at a faster rate at higher ambient temperatures.
- To reduce the self-discharge rate, store battery in a cool (not freezing), dry place.
- Charge the battery every month if stored at temperatures below 60° F 16° C .
- Charge the battery more frequently if stored in a warm area above 60° F 16° C .

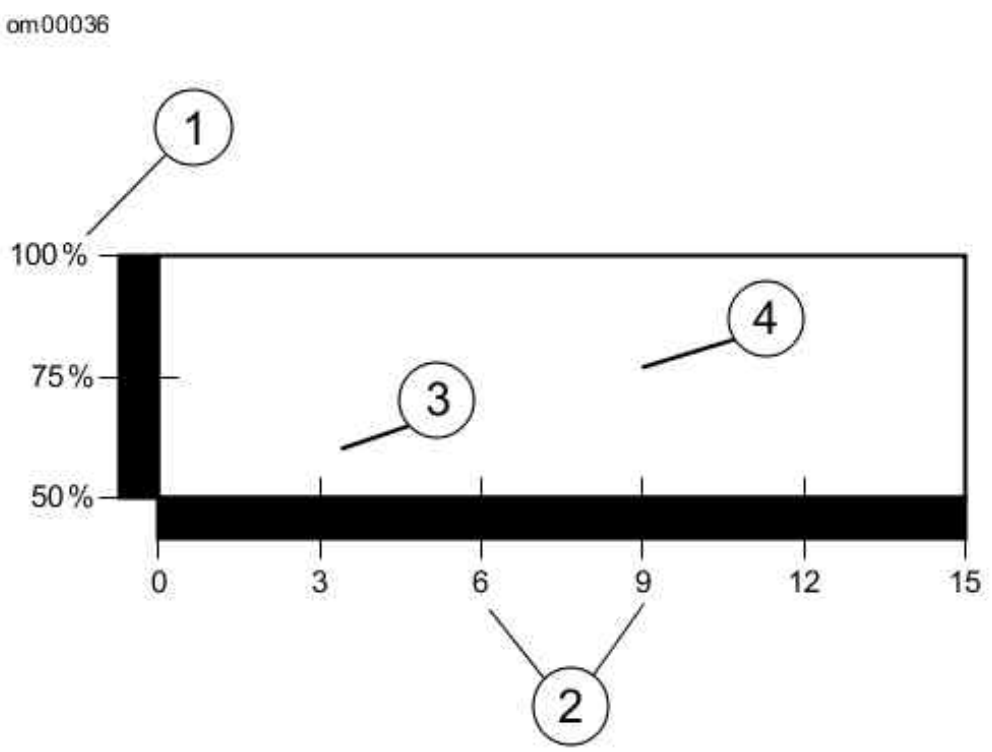

1. Capacity
2. Months of non-use
3. Measured at 105° F (40° C)
4. Measured at 77° F (25° C)

Effective Rate of Temperature on Battery Self-discharging Rate

Battery: FXSTSSE3

Disconnection and Removal

Before you can inspect or disconnect your battery you must read the section containing information about seat removal.

⚠WARNING

Disconnect negative (-) battery cable first. If positive (+) cable should contact ground with negative (-) cable connected, the resulting sparks can cause a battery explosion, which could result in death or serious injury. (00049a)

1. Unthread bolt and remove battery negative cable (black) from battery negative (-) terminal.
2. Unthread bolt and remove battery positive cable (red) from battery positive (+) terminal.
3. Lift battery from battery box within oil tank cavity.

Installation and Connection

CAUTION

Do not over-tighten bolts on battery terminals. Use recommended torque values. Over-tightening battery terminal bolts could result in damage to battery terminals. (00216a)

⚠WARNING

Connect positive (+) battery cable first. If positive (+) cable should contact ground with negative (-) cable connected, the resulting sparks can cause a battery explosion, which could result in death or serious injury. (00068a)

⚠WARNING

Do not allow positive (+) battery cable to contact ground with negative (-) cable connected. Resulting sparks can cause a battery explosion, which could result in death or serious injury. (00069a)

1. Place the fully charged battery into the battery box located within oil tank cavity, terminal side forward.
2. Install battery positive cable (+) (red) to battery positive (+) terminal.
3. Tighten fastener to 60-70 in-lbs (7-9 Nm).

4. Install battery negative cable (black) to battery negative (-) terminal.
5. Tighten fastener to 60-70 in-lbs (7-9 Nm).

CAUTION

Keep battery clean and lightly coat terminals with petroleum jelly to prevent corrosion. Failure to do so could result in damage to battery terminals. (00217a)

6. Apply a light coat of petroleum jelly or corrosion retardant material to both battery terminals.

⚠WARNING

After installing seat, pull upward on seat to be sure it is locked in position. While riding, a loose seat can shift causing loss of control, which could result in death or serious injury. (00070b)

7. Install seat.

Jump Starting

Harley-Davidson does not recommend jump-starting a motorcycle. However, there may be circumstances when it is necessary to do so. Therefore, we suggest jump-starting be performed as follows:

⚠WARNING

Be sure jumper cables touch only appropriate battery terminals or ground. Allowing jumper cables to touch each other can result in sparks and a battery explosion, which could result in death or serious injury. (00072a)

⚠WARNING

Explosive hydrogen gas, which escapes during charging, could cause death or serious injury. Charge battery in a well-ventilated area. Keep open flames, electrical sparks and smoking materials away from battery at all times. KEEP BATTERIES AWAY FROM CHILDREN. (00065a)

CAUTION

Harley-Davidson motorcycles have a 12 Volt battery. Be sure the booster vehicle has a 12 Volt system. Failure to do so could result in vehicle damage. (00220a)

NOTE:

This procedure presumes the BOOSTER battery is in another vehicle.

1. Turn off all unnecessary lamps and accessories.

Positive Cable

2. See Jump Start Cable Connections. Connect one end of a jumper cable to the DISCHARGED battery positive (+) terminal (1).
3. Connect the other end of the same cable to the BOOSTER battery positive (+) terminal (2).

Negative Cable

⚠WARNING

Do not connect negative (-) cable to or near the discharged battery negative (-) terminal. Doing so could cause a spark and explosion, which could result in death or serious injury. (00073a)

4. Connect one end of a jumper cable to the BOOSTER battery negative (-) terminal (3).

CAUTION

Do not connect the negative (-) cable to painted or chrome parts. Doing so could result in discoloration at the attachment point. (00221a)

5. Connect other end of the same cable (4) to a safe ground, (away from the DISCHARGED battery).
6. Start motorcycle.
7. Disconnect cables in reverse order of steps 2, 3, 4, 5. That is: steps 5, 4, 3, 2.

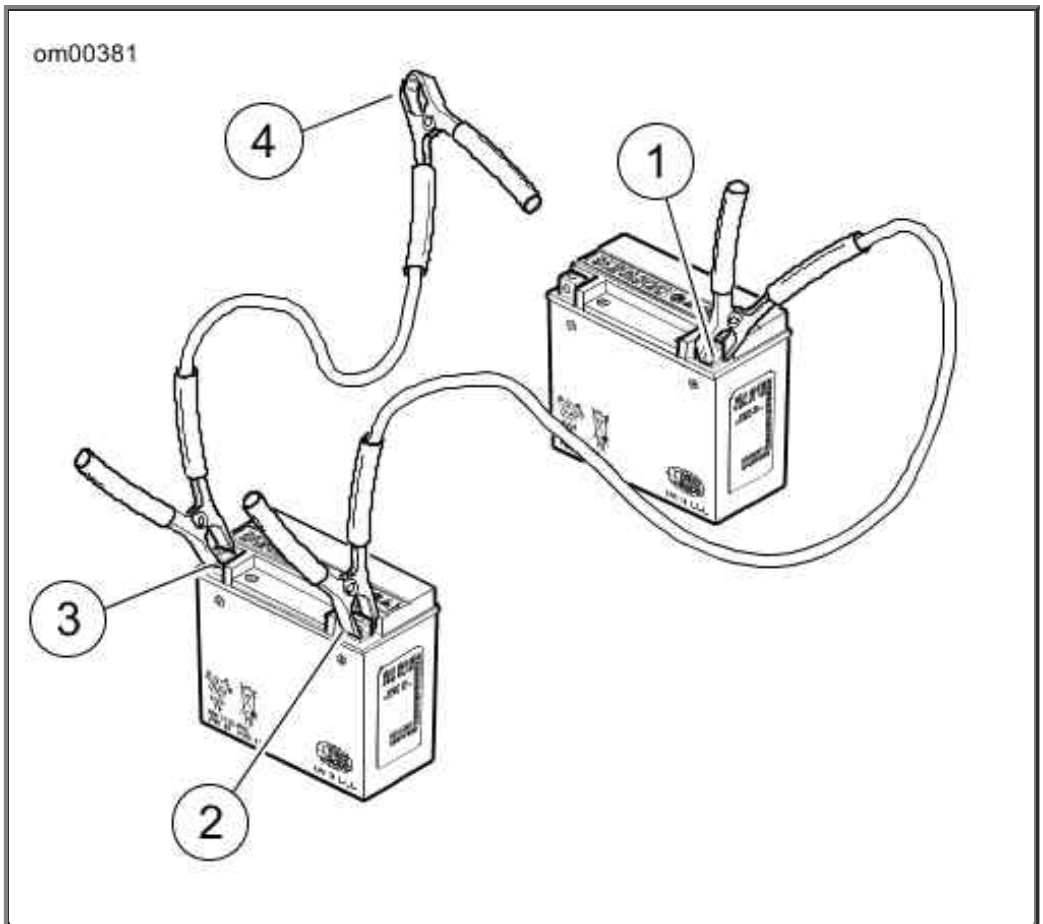

1. Discharged battery positive (+) terminal
2. Booster battery positive (+) terminal
3. Booster battery negative (-) terminal
4. Ground

Jump Start Cable Connections

Electrical Protection: FXSTSSE3

Fuses

The fuse block is below the seat and behind the battery. The block contains eight 15-amp replaceable fuses. Additional spare fuses may be carried if the rider chooses to do so.

Fuse Removal

1. Remove seat.

⚠WARNING

To prevent accidental vehicle start-up, which could cause death or serious injury, disconnect negative (-) battery cable before proceeding. (00048a)

2. Disconnect and remove battery negative (-) cable (black) from battery negative (-) terminal.
3. Pull cover away from fuse block.

CAUTION

Always use replacement fuses that are of the correct type and amperage rating. Use of incorrect fuses can result in damage to electrical systems. (00222a)

4. See Relay/Fuse Panel (Top View). Replace suspect fuse.

Fuse Installation

1. Place cover over fuse block.
2. Install battery negative cable (black) to battery negative (-) terminal.
3. Tighten fastener to 60-70 in-lbs (7-9 Nm).

⚠WARNING

After installing seat, pull upward on seat to be sure it is locked in position. While riding, a loose seat can shift causing loss of control, which could result in death or serious injury. (00070b)

4. Install seat.

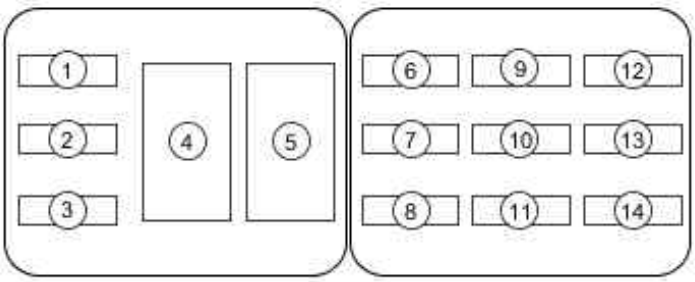

1. Fuel pump fuse
2. Spare fuse
3. Spare fuse
4. System relay
5. Start relay
6. Lights fuse
7. Ignition fuse
8. Instruments fuse
9. Accessory fuse
10. Battery fuse
11. P&A (2 amp max)
12. Headlamp fuse
13. Engine control fuse
14. ECM power fuse

Relay/Fuse Panel (Top View)

Main Fuse

See Main Fuse. The main fuse provides main power from the battery and protects the motorcycle wiring. This 40-amp fuse is located under the seat.

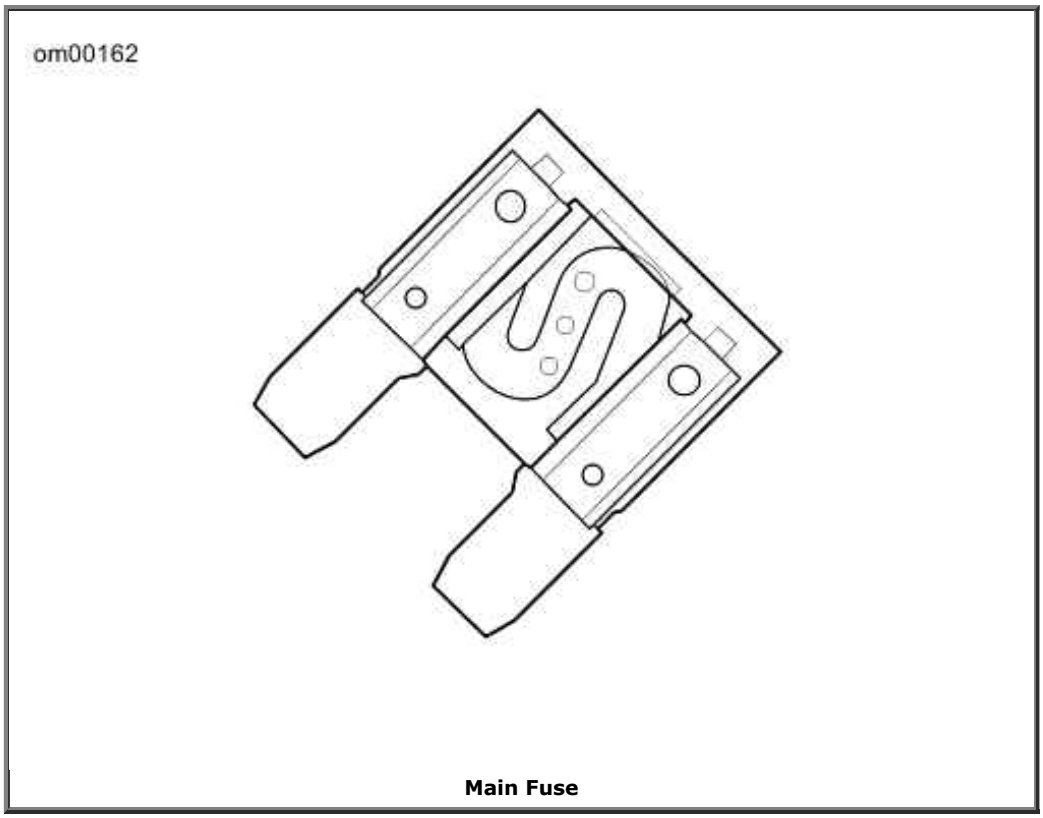

Main Fuse

Motorcycle Storage

Placing Motorcycle in Storage

CAUTION

Proper storage is important for the trouble-free operation of your motorcycle. See your Owner's Manual for storage recommendations or see a Harley-Davidson dealer. Improper storage procedures can lead to equipment damage. (00046a)

If the motorcycle will not be operated for several months, such as during the winter season, there are several tasks which should be performed. These steps will protect parts against corrosion, preserve the battery and prevent the build-up of gum and varnish in the fuel system.

⚠WARNING

Do not store motorcycle with gasoline in tank within the home or garage where open flames, pilot lights, sparks or electric motors are present. Gasoline is extremely flammable and highly explosive, which could result in death or serious injury. (00003a)

NOTE:

Make a list of everything you do and fasten it to a handgrip. When you take the motorcycle out of storage, this list will be your reference/checklist to get your motorcycle in operating condition.

1. Fill fuel tank and add a gasoline stabilizer. Use one of the commercially available gasoline stabilizers and follow the manufacturer's instructions.

2. Warm motorcycle to operating temperature. Change oil and turn engine over to circulate the new oil.

3. Check and adjust belt if necessary.

4. Check tire inflation. Adjust to proper inflation pressure.

5. To protect the vehicle's body panels, engine, chassis and wheels from corrosion, follow the cosmetic care procedures described in the Accessory Maintenance section of this owner's manual prior to storage.

6. Prepare battery for winter storage. See Battery: General.

⚠WARNING

Explosive hydrogen gas, which escapes during charging, could cause death or serious injury. Charge battery in a well-ventilated area. Keep open flames, electrical sparks and smoking materials away from battery at all times. KEEP BATTERIES AWAY FROM CHILDREN. (00065a)

7. If the motorcycle is to be stored with security system armed, it will be necessary to connect a Battery Tender to maintain battery charge. If security system will not be armed and a Battery Tender is not available, either:

    a. Disconnect negative battery cable.

    b. Remove main fuse (if applicable).

8. If motorcycle is to be covered, use a material such as light canvas that will breathe. Plastic materials that do not breathe promote the formation of condensation.

Removing Motorcycle From Storage

⚠WARNING

The clutch failing to disengage can cause loss of control, which could result in death or serious injury. Prior to starting after extended periods of storage, place transmission in gear and push vehicle back and forth several times to assure proper clutch disengagement. (00075a)

1. See Battery: General for proper battery care. Charge and install the battery.

2. Remove and inspect the spark plugs. Replace if necessary.

3. Clean the air cleaner element.
4. Start the engine and run until it reaches normal operating temperature. Turn off engine.
5. Check amount of oil in the oil tank.
6. Check the transmission lubricant level.
7. Check controls to be sure they are operating properly. Operate the front and rear brakes, throttle, clutch and shifter.
8. Check steering for smoothness by turning the handlebars through the full operating range.

⚠WARNING

Be sure tires are properly inflated, balanced and have adequate tread. Inspect your tires regularly and see a Harley-Davidson dealer for replacements. Riding with excessively worn, unbalanced or under-inflated tires can adversely affect stability and handling, which could result in death or serious injury. (00014a)

9. Check tire pressure. Incorrect pressure will result in poor riding characteristics and can affect handling and stability.
10. Check all electrical equipment and switches including the stop lamp, turn signals and horn for proper operation.
11. Check for any fuel, oil or brake fluid leaks.

CAUTION

Turn engine over a few times to be sure there is no oil in the crankcase and that all oil has been pumped back into the oil tank. Stop engine and re-check oil level. Failure to do so can result in engine damage. (00071a)

Accessories Maintenance

Cleaning and General Maintenance

Clean and protect the cosmetic surfaces on your motorcycle as often as possible to inhibit rust and corrosion. To aid you in keeping your motorcycle clean, see your Harley-Davidson dealer for surface care products.

Harley-Davidson recommends the following products:

- SUNWASH (Part No. 94659-98): for general cleaning/washing of all surfaces.
- BUG REMOVER (Part No. 94657-98): for removing bugs from all surface finishes.
- HARLEY SPRAY CLEANER (Part No. 99817-99): all purpose cleaner and quick detailer for metal surfaces.
- HARLEY GLOSS (Part No. 94627-98): all purpose surface protectant provides UV

protection and a gloss finish.

⚠WARNING

Observe warnings on labels of cleaning compounds. Failure to follow warnings could result in death or serious injury. (00076a)

⚠WARNING

Do not wash brake discs with cleaners containing chlorine or silicone. Cleaners containing chlorine and silicone can impair brake function, which could result in death or serious injury. (00077a)

CAUTION

Do not use pressure washers to clean wheel bearings, sprocket bearings, steering head bearings and swingarm pivot bearings. Doing so can result in equipment damage. (00489b)

Leather Care

NOTE:

Many Harley-Davidson accessories and seats are either made of leather or have leather inserts. Natural materials age differently and require different care than man-made materials. Seat covers and panels made of leather will gain "character", such as wrinkles, with age. Leather is porous and organic and each leather product will settle into its own distinct form with use. Your leather product will mature into its own custom shape and style from the sun, rain and the miles. This maturing is natural and will enhance the custom quality of your Harley-Davidson motorcycle.

Leather must be periodically cleaned and treated to maintain its appearance and extend its life. Clean and treat leather once a season or more frequently under adverse conditions.

CAUTION

Do not use bleach or detergents containing bleach on saddlebags, seats, tank panels or painted surfaces. Doing so can result in equipment damage. (00229a)

- Do not use ordinary soap to clean leather or fur. It could dry or remove the oils from the leather.
- Use ONLY a good quality saddle soap to clean leather. Be sure you rinse saddle soap off thoroughly before treating leather.
- Never try to dry leather quickly, using artificial means. Always let leather dry naturally, at room temperature.

1. Vacuum or blow dust off.

2. Thoroughly clean leather with a good quality saddle soap, following manufacturer's

directions. Rinse thoroughly with clean sponge or cloth and water. Allow leather to dry.

3. Once leather is dry, treat with a good quality leather treatment, such as LEATHERCARE (Part No. 98261-91).

4. Always allow leather to dry completely before using.

Metal Grind Finish

A metal grind process accents your motorcycle. This process requires extra care in that any deep chip or nick needs to be touched up with CLEAR COAT (Part No. 98600EK). Failure to perform this maintenance step will result in corrosion to that area of your sheet metal.

Wheel Care

Some vehicle's wheels are aluminum and do not have a protective coating. Other vehicles have laced wheels with chrome plated rims and zinc or chrome plated spokes. Damage from harsh chemicals, acid based wheel cleaners, brake dust and lack of maintenance can occur. Regular washing and the use of a corrosion protectant will help to maintain their original appearance. Harley-Davidson WHEEL AND TIRE CLEANER (Part No. 94658-98) is recommended for cleaning wheels and tires. Then use HARLEY GLOSS (Part No. 94627-98) to protect the wheel surfaces.

NOTES:

- *It is imperative that the wheels are cared for weekly to guard against pitting and corrosion.*
- *Corrosion of these components is not considered to be a defect in materials or workmanship.*

Harley-Davidson recommends the following products:

- WHEEL AND TIRE CLEANER (Part No. 94658-98): cleaner/degreaser for wheels, tires and engine.
- HARLEY GLOSS (Part No. 94627-98): all purpose surface protection the provides UV protection and a gloss finish.

See a Harley-Davidson dealer for cleaning, polishing and waxing products.

Motorcycle Cover

Your motorcycle comes with a protective indoor motorcycle storage cover. See a Harley-Davidson dealer for a complete list of other accessories.

Troubleshooting

Troubleshooting: General

⚠WARNING

The troubleshooting section of the Owner's Manual is a guide to diagnose problems. Read the service manual before performing any work. Improper repair and/or maintenance could result in death or serious injury.

(00080a)

The following checklist of possible operating troubles and their probable causes will be helpful in keeping your motorcycle in good operating condition. More than one of these conditions may be causing trouble and should be carefully checked.

Engine: Twin Cam 110

Starter Does Not Operate or Does Not Turn Engine Over

---

1. Engine run switch in OFF position.
2. Ignition switch not ON.
3. Discharged battery or loose or corroded connections (solenoid chatters).
4. Clutch lever not squeezed against handlebar or transmission not in neutral.
5. Jiffy stand not in retracted position (required for international models).
6. Blown fuse.

Engine Turns Over But Does Not Start

---

1. Fuel tank empty.
2. Discharged battery or loose or broken battery terminal connections.
3. Fouled spark plugs.
4. Spark plug cable connections loose or in bad condition and shorting.
5. Loose or corroded wire or cable connection(s) at coil or battery.
6. Fuel pump inoperative.
7. Blown fuse.

Starts Hard

---

1. Automatic Compression Release (ACR) not functioning properly.
2. Spark plugs in bad condition, have improper gap, or are partially fouled.
3. Spark plug cables in bad condition and leaking.
4. Battery nearly discharged.
5. Loose wire or cable connection(s) at one of the battery terminals or at coil.
6. Engine oil too heavy (winter operation).

7. Fuel tank vent plugged or fuel line closed off, restricting fuel flow.
8. Water or dirt in fuel system.
9. Fuel pump inoperative.

Starts But Runs Irregularly or Misses

1. Spark plugs in bad condition or partially fouled.
2. Spark plug cables in bad condition and leaking.
3. Spark plug gap too close or too wide.
4. Battery nearly discharged.
5. Damaged wire or loose connection at battery terminals or coils.
6. Intermittent short circuit due to damaged wire insulation.
7. Water or dirt in fuel system or filter.
8. Fuel vent system plugged. See dealer.
9. One or more injectors fouled.

A Spark Plug Fouls Repeatedly

1. Incorrect spark plug.

Pre-ignition or Detonation (Knocks or Pings)

1. Incorrect fuel.
2. Incorrect spark plug for the kind of service.

Overheats

1. Insufficient oil supply or oil not circulating.
2. Heavy carbon deposit from lugging engine. See dealer.
3. Insufficient air flow over cylinder heads during extended periods of idling or parade duty.

Excessive Vibration

1. Rear fork pivot shaft nuts loose. See dealer.
2. Front engine mounting bolts loose. See dealer.

3. Engine to transmission mounting bolts loose. See dealer.
4. Broken frame. See dealer.
5. Front chain or links tight as a result of insufficient lubrication or belt badly worn.
6. Wheels and/or tires damaged. See dealer.
7. Vehicle not properly aligned. See dealer.

Electrical System

Alternator Does Not Charge

1. Module not grounded. See dealer.
2. Engine ground wire loose or broken. See dealer.
3. Loose or broken wires in charging circuit. See dealer.

Alternator Charge Rate is Below Normal

1. Weak battery.
2. Excessive use of add-on accessories.
3. Loose or corroded connections.
4. Extensive periods of idling or low speed riding.

Transmission

Transmission Shifts Hard

1. Bent shifter rod. See dealer.

Transmission Jumps Out of Gear

1. Worn shifter dogs in transmission. See dealer.

Clutch Slips

1. Clutch controls improperly adjusted. See dealer.
2. Worn friction discs. See dealer.
3. Insufficient clutch spring tension. See dealer.

Clutch Drags or Does Not Release

1. Clutch controls improperly adjusted. See dealer.
2. Primary chaincase overfilled.
3. Clutch discs warped. See dealer.

Clutch Chatters

1. Friction discs or steel discs worn or warped. See dealer.

Brakes

Brakes Do Not Hold Normally

1. Master cylinder low on fluid. See dealer.
2. Brake line contains air bubbles. See dealer.
3. Master cylinder piston worn. See dealer.
4. Brake pads contaminated with grease or oil. See dealer.
5. Brake pads badly worn. See dealer.
6. Brake disc badly worn or warped. See dealer.
7. Brake fades because of heat build up. Excessive braking or brake pads dragging. See dealer.
8. Brake drags. Insufficient hand lever free play. See dealer.

Warranties and Responsibilities

Warranty and Maintenance: FXSTSSE3

This Owner's Manual contains your new motorcycle warranty.

It is the owner's responsibility to follow the scheduled mileage intervals as specified. All of the specified maintenance services must be performed to keep your warranty valid.

1. Make an appointment with a Harley-Davidson dealer for inspection and service just before you have ridden 500 miles 800 kilometers .
2. Bring this Owner's Manual with you when you visit your dealer to have your motorcycle inspected and serviced.
3. Have the dealer technician sign at the proper mileage interval. The records should be retained by the owner as proof of proper maintenance.

4. Keep receipts covering any parts, service or maintenance performed. These records should be transferred to each subsequent owner.

⚠WARNING

Do not use aftermarket parts and custom made front forks which can adversely affect performance and handling. Removing or altering factory installed parts can adversely affect performance and could result in death or serious injury. (00001a)

Harley-Davidson dealerships are independently owned and operated and may sell parts and accessories that are not manufactured or approved by Harley-Davidson. Therefore, you should understand that we are not and cannot be responsible for the quality, suitability, or safety of any non-Harley-Davidson part, accessory or design modification, including labor, which may be sold and/or installed by our dealers.

Keeping It All Harley-Davidson

1. Keep your Harley-Davidson completely Harley-Davidson.
2. Insist that your dealer uses only Genuine replacement parts to keep your Harley-Davidson motorcycle and its warranty intact.

Exacting design and stringent testing ensure performance and warranty coverage. Again, insist on Genuine parts for your genuine Harley-Davidson motorcycle.

NOTE:

Installing off-road or competition parts to enhance performance may void all or part of your new motorcycle warranty. See the Harley-Davidson Limited Warranty in this manual or a Harley-Davidson dealer for details.

CAUTION

It is possible to overload your motorcycle's charging system by adding too many electrical accessories. If your combined electrical accessories operating at any one time consume more electrical current than your vehicle's charging system can produce, the electrical consumption can discharge the battery and cause vehicle electrical system damage. See a Harley-Davidson dealer for advice about the amount of current consumed by additional electrical accessories, or for necessary wiring changes. (00211b)

Important Moving Information

If you move from your present address, or sell your motorcycle, please fill out and mail the post card at the back of this manual. This is necessary in the event that the Company needs to contact the owner concerning information that could affect the safe operation of this motorcycle.

EPA Noise Regulations in the United States

EPA noise regulations require that the following statements be included in the Owner's Manual.

TAMPERING WITH NOISE CONTROL SYSTEM PROHIBITED: Federal law prohibits the following acts or the causing thereof: (1) The removal or rendering inoperative by any person other than for purposes of maintenance, repair, or replacement of any device or element of design incorporated into any new vehicle for the purpose of noise control prior to its sale or delivery to the ultimate purchaser or while it is in use, or (2) the use of the vehicle after such device or element of design has been removed or rendered inoperative by any person.

AMONG THOSE ACTS PRESUMED TO CONSTITUTE TAMPERING ARE THE ACTS LISTED BELOW.

1. Replacing the muffler(s) and/or the entire exhaust system with parts not certified to be noise legal for street use.
2. Removing or modifying the muffler internal baffles in any way.
3. Replacing the air intake/cleaner assembly with one not certified to be noise legal for street use.
4. Modifying the air intake/cleaner assembly in such a way as to make the vehicle no longer noise legal for street use.

Harley-Davidson recommends that any and all noise related maintenance be done by an authorized Harley-Davidson dealer using genuine Harley-Davidson parts.

California Evaporative Emission Controls: 2009 Models

All new model year 2009 Harley-Davidson motorcycles sold in the State of California are equipped with an evaporative emission control system. This system is designed to meet the CARB regulations in effect at the time of manufacture.

The system requires a small amount of maintenance. Periodic inspection is required to make sure hoses are properly routed, not kinked or blocked and that all fittings are secure. Mounting hardware should also be checked periodically for tightness.

Warranty/Service Information

Any authorized Harley-Davidson dealer is responsible for providing the warranty repair work on your motorcycle. If you have any questions regarding warranty obligations contact your selling dealer.

For normal service work or warranty work under the above conditions, you may obtain the name and location of your nearest U.S. Harley-Davidson dealer by calling 1-800-490-9635 (toll free), in any state except Alaska and Hawaii.

NOTE:

The number shown above is accessible only with a touch-tone phone in the United States.

Reporting Safety Defects in United States

Safety defects must be reported to the National Highway Traffic Safety Administration (NHTSA) and Harley-Davidson.

NHTSA Statement

If you believe that your vehicle has a defect which could cause a crash or could cause injury or death, you should immediately inform the National Highway Traffic Safety Administration (NHTSA) in addition to notifying Harley-Davidson.

If NHTSA receives similar complaints, it may open an investigation, and if it finds that a safety defect exists in a group of vehicles, it may order a recall and remedy campaign. However, NHTSA cannot become involved in individual problems between you, your dealer, or Harley-Davidson.

To contact NHTSA, refer to NHTSA Contacts.

NHTSA Contacts

ITEM	DATA
Phone	Call the Auto Safety Hot Line toll-free at 1-888-DASH-2DOT
Mail	U.S. Department of Transportation, National Highway Traffic Safety Administration, Office of Defects Investigation, NVS-210, 400 7th Street S.W., Washington, D.C. 20590
Web site	www.nhtsa.dot.gov

You can also obtain other information about motor vehicle safety from the hot line.

Owner Transfer Identification Form

When purchasing a pre-owned Harley-Davidson or Buell, we encourage you to submit an Owner Transfer Notification Form. It is critical that new owner information is communicated to Harley-Davidson. New owner information is required to be on file with Harley-Davidson to transfer an Extended Service Plan Contract. Harley-Davidson is also required by the National Traffic and Motor Vehicle Safety Act to notify all owners in the event of a recall. The form may be obtained at any Harley-Davidson dealer.

Required Documentation for Imported Motorcycles

If a Harley-Davidson is imported into the United States, additional documentation is required to be eligible for the United States Manufacturer's Limited Warranty. A Harley-Davidson dealer can provide a form explaining the requirements.

Limited Motorcycle Warranty

2009 HARLEY-DAVIDSON MOTORCYCLE LIMITED WARRANTY

24 Months/Unlimited Miles

Harley-Davidson warrants for any new 2009 Harley-Davidson motorcycle/sidecar that an authorized Harley-Davidson dealer will repair or replace without charge any parts found under normal use to be defective in factory materials or workmanship. Such repair and replacement will be Harley-Davidson's sole obligation and the customer's sole remedy under this warranty.

THERE IS NO OTHER EXPRESS WARRANTY (OTHER THAN THE SEPARATE EMISSIONS AND NOISE WARRANTIES) ON THE MOTORCYCLE. ANY IMPLIED WARRANTY OF MERCHANTABILITY OR FITNESS FOR PARTICULAR PURPOSE IS LIMITED TO THE DURATION OF THIS WARRANTY.

Some states do not allow limitations on how long an implied warranty lasts, so the above limitation may not apply to you.

TO THE FULLEST EXTENT ALLOWED BY LAW, HARLEY-DAVIDSON AND ITS DEALERS SHALL NOT BE LIABLE FOR LOSS OF USE, INCONVENIENCE, LOST TIME, COMMERCIAL LOSS OR OTHER INCIDENTAL OR CONSEQUENTIAL DAMAGES. Some states do not allow the exclusion or limitation of incidental or consequential damages, so the above limitation or exclusion may not apply to you. This warranty gives you specific legal rights, and you may have other rights which vary from state to state.

The following terms and conditions apply to this warranty:

Duration

1. The duration of this limited warranty is twenty four months, starting from the earlier of (a) the date of initial retail purchase and delivery from an authorized Harley-Davidson dealer, or (b) the third anniversary of the last day of the model year of the motorcycle/sidecar. Your dealer will submit an electronic Sales and Warranty Registration form to initiate your warranty.

2. Any unexpired portion of this limited warranty will be transferred to subsequent owners, upon the resale of the motorcycle/sidecar during the warranty period.

Owner's Obligations

To obtain warranty service, return your motorcycle/sidecar at your expense within the warranty period to an authorized dealer. Our dealer should be able to provide warranty service during normal business hours and as soon as possible, depending upon the workload of the dealer's service department and the availability of necessary parts.

Harley-Davidson Motor Company, P.O. Box 653, Milwaukee, Wisconsin 53201, U.S.A.

Exclusions

This warranty will not apply to any motorcycle/sidecar as follows:

1. Which has not been operated or maintained as specified in the Owner's Manual.

2. Which has been abused, misused, improperly stored, used "off the highway," or used for

racing or competition of any kind.

3. Which is not manufactured to comply with the laws of the market in which it is registered.

4. Installing off-road or competition parts to enhance performance may void all or part of your new motorcycle warranty. See a Harley-Davidson dealer for details.

5. Acts of God, war, riot, insurrection, natural disasters, including, but not limited to, nuclear contamination, lightning, dust storms, hail storms, ice storms, earthquakes, floods, or for other circumstances out of Harley-Davidson's control.

Other Limitations

This warranty does not cover:

1. Parts and labor for normal maintenance as recommended in the Owner's Manual, or the replacement of parts due to normal wear and tear including such items as the following: tires, lubrication, oil and filter change, fuel system cleaning, battery maintenance, engine tune-up, spark plugs, brake, clutch and chain/belt adjustment (including chain replacement).

2. Cosmetic concerns that arise as a result of owner abuse, lack of proper maintenance or environmental conditions (except concerns that result from defects in material or workmanship, which are covered by this warranty for the duration of the warranty period).

3. Any cosmetic condition existing at the time of retail delivery that has not been documented by the selling dealer prior to retail delivery.

4. Defects or damage to the motorcycle caused by alterations outside of Harley-Davidson factory specifications.

Important: Read Carefully

---

1. Our dealers are independently owned and operated and may sell other products. Because of this, HARLEY-DAVIDSON IS NOT RESPONSIBLE FOR THE SAFETY, QUALITY, OR SUITABILITY OF ANY NON-HARLEY-DAVIDSON PART, ACCESSORY OR DESIGN MODIFICATION INCLUDING LABOR WHICH MAY BE SOLD AND/OR INSTALLED BY OUR DEALERS.

2. This warranty is a contract between you and the manufacturer. It is separate and apart from any warranty you may receive or purchase from the dealer. The dealer is not authorized to alter, modify, or in any way change the terms and conditions of this warranty.

3. Any warranty work or parts replacement authorized by the manufacturer will not preclude the manufacturer from later relying on any exclusion where applicable.

Limited Noise Warranty

2009 HARLEY-DAVIDSON MOTORCYCLE NOISE CONTROL SYSTEM LIMITED WARRANTY

The following warranty applies to the noise control system, is in addition to the MOTORCYCLE

LIMITED WARRANTY and EMISSION CONTROL SYSTEM LIMITED WARRANTY, and applies only to motorcycles sold in the U.S.

Harley-Davidson Motor Company warrants that this vehicle is designed and built so as to conform at the time of sale with applicable regulations of the U.S. Environmental Protection Agency (as tested following F-76 Drive-By test procedure) and that it is free from defects in materials and workmanship which would cause this motorcycle not to meet U.S. Environmental Protection Agency Standards within 1 year or 3,730 miles (6,000 kilometers) whichever expires first. Any unexpired portion of this limited warranty will be transferred to subsequent owners, upon the resale of the motorcycle during the warranty period.

THERE IS NO OTHER EXPRESS WARRANTY (OTHER THAN THE SEPARATE MOTORCYCLE AND EMISSIONS WARRANTIES) ON THE MOTORCYCLE. ANY IMPLIED WARRANTY OF MERCHANTABILITY OR FITNESS FOR PARTICULAR PURPOSE IS LIMITED TO THE DURATION OF THIS WARRANTY.

Some states do not allow limitations on how long an implied warranty lasts, so the above limitation may not apply to you.

The warranty period shall begin on the date the motorcycle is delivered to the first retail purchaser or, if the motorcycle is placed in service as a demonstrator or company vehicle prior to sale at retail, on the date it is first placed in service.

THE FOLLOWING ITEMS ARE NOT COVERED BY THE NOISE CONTROL SYSTEM WARRANTY

1. Failures which arise as a result of misuse, alterations, or accident as specified in the Owner's Manual.
2. Replacing, removing, or modifying any portion of the NOISE CONTROL SYSTEM (consisting of the exhaust system and air intake/cleaner assembly) with parts not certified to be legal for street use.
3. Any motorcycle on which the odometer mileage has been changed so that the mileage cannot be determined.
4. TO THE FULLEST EXTENT ALLOWED BY LAW, HARLEY-DAVIDSON AND ITS DEALERS SHALL NOT BE LIABLE FOR LOSS OF USE, INCONVENIENCE, LOST TIME, COMMERCIAL LOSS OR OTHER INCIDENTAL OR CONSEQUENTIAL DAMAGES.

Some states do not allow the exclusion or limitation of incidental or consequential damages, so the above limitation or exclusion may not apply to you.

Other Rights

This warranty gives you specific legal rights, and you may have other rights which vary from state to state.

Recommendations for Required Maintenance

It is recommended that any noise system maintenance be performed by an authorized Harley-Davidson dealer using genuine Harley-Davidson replacement parts. The maintenance, replacement or repair of the noise control system may be performed by any other qualified service

outlet or individual. Non-genuine parts may be used only if such parts are certified to comply with U.S. Environmental Protection Agency Standards.

Harley-Davidson Motor Company, P.O. Box 653, Milwaukee, Wisconsin 53201, U.S.A.

Limited Emission Warranty

2009 HARLEY-DAVIDSON EMISSION CONTROL SYSTEM LIMITED WARRANTY

The following warranty applies to the emission control system, is in addition to the LIMITED MOTORCYCLE WARRANTY and NOISE CONTROL SYSTEM LIMITED WARRANTY, and applies only to motorcycles sold in the U.S.

Harley-Davidson Motor Company warrants that this vehicle is designed and built so as to conform at the time of sale with applicable regulations of the U.S. Federal Environmental Protection Agency, and that it is free from defects in materials and workmanship which would cause this motorcycle not to meet U.S. Environmental Protection Agency Standards within 5 years or 18,641 miles (30,000 kilometers) whichever expires first. Any unexpired portion of this limited warranty will be transferred to subsequent owners, upon the resale of the motorcycle during the warranty period.

THERE IS NO OTHER EXPRESS WARRANTY (OTHER THAN THE SEPARATE MOTORCYCLE AND NOISE WARRANTIES) ON THE MOTORCYCLE. ANY IMPLIED WARRANTY OF MERCHANTABILITY OR FITNESS FOR PARTICULAR PURPOSE IS LIMITED TO THE DURATION OF THIS WARRANTY.

Some states do not allow limitations on how long an implied warranty lasts, so the above limitation may not apply to you.

The warranty period shall begin on the date the motorcycle is delivered to the first retail purchaser or, if the motorcycle is placed in service as a demonstrator or company vehicle prior to sale at retail, on the date it is first placed in service.

THE FOLLOWING ITEMS ARE NOT COVERED BY THE EMISSION CONTROL SYSTEM WARRANTY

1. Failures which arise as a result of misuse, alterations, accident or non-performance of maintenance as specified in the Owner's Manual.

2. The replacement of parts (such as spark plugs, fuel and oil filters, etc.) used in required maintenance.

3. Any motorcycle on which the odometer mileage has been changed so that the mileage cannot be determined.

4. TO THE FULLEST EXTENT ALLOWED BY LAW, HARLEY-DAVIDSON AND ITS DEALERS SHALL NOT BE LIABLE FOR LOSS OF USE, INCONVENIENCE, LOST TIME, COMMERCIAL LOSS OR OTHER INCIDENTAL OR CONSEQUENTIAL DAMAGES.

Some states do not allow the exclusion or limitation of incidental or consequential damages, so the above limitation or exclusion may not apply to you.

Other Rights

This warranty gives you specific legal rights, and you may have other rights which vary from state to state.

Recommendations for Required Maintenance

It is recommended that any emission system maintenance be performed by an authorized Harley-Davidson dealer using genuine Harley-Davidson replacement parts. The maintenance, replacement or repair of the emissions control system may be performed by any other qualified service outlet or individual. Non-genuine parts may be used only if such parts are certified to comply with U.S. Environmental Protection Agency Standards.

Harley-Davidson Motor Company, P.O. Box 653, Milwaukee, Wisconsin 53201, U.S.A.

Maintenance Scheduling

Regular Service Intervals

Regular lubrication and maintenance will help keep your new Harley-Davidson operating at peak performance. Your Harley-Davidson dealer knows best how to service your motorcycle with factory approved methods and equipment assuring you of thorough and competent workmanship.

NOTES:

- *Refer to Regular Service Intervals: 2009 FXSTSSE3. Regular maintenance interval operations are required to keep your new motorcycle warranty in force. The use of other than Harley-Davidson approved parts and service procedures may void the warranty. Any alterations to the emission system components, such as the exhaust system, may be in violation of Federal and State laws.*
- *Refer to Owner's Maintenance Records: All Softail Springers. When servicing your motorcycle, bring this owner's manual to the dealership and complete information needed in the blank columns listed.*

⚠WARNING

Perform the service and maintenance operations as indicated in the regular service interval table. Lack of regular maintenance at the recommended intervals can affect the safe operation of your motorcycle, which could result in death or serious injury. (00010a)

⚠WARNING

If you operate your motorcycle under adverse conditions (severe cold, extreme heat, very dusty environment, very bad roads, through standing water, etc.), you should perform the regular maintenance intervals more frequently to ensure the safe operation of your motorcycle. Failure to maintain your motorcycle could result in death or serious injury. (00094a)

Regular Service Intervals: 2009 FXSTSSE3

ITEM SERVICED	PROCEDURE	1000	5000	10,000	15,000	20,000	25,000	NOTES

ITEM SERVICED	PROCEDURE	1000 MI. 1600 KM	5000 MI. 8000 KM	10,000 MI. 16,000 KM	15,000 MI. 24,000 KM	20,000 MI. 32,000 KM	25,000 MI. 40,000 KM	NOTES
Engine oil and filter	Replace	X	X	X	X	X	X	
Oil lines and brake system	Inspect for leaks	X	X	X	X	X	X	1
Air cleaner	Inspect, service as required	X	X	X	X	X	X	
Tires	Check pressure, inspect tread	X	X	X	X	X	X	
Primary chaincase lubricant	Replace	X		X		X		
Transmission lubricant	Replace	X				X		
Clutch fluid	Check level and condition	X	X	X	X	X	X	1
Rear belt and sprockets	Inspect, adjust belt	X	X	X	X	X	X	1
Throttle, brake, and clutch controls	Check, adjust and lubricate	X	X	X	X	X	X	1
Jiffy stand	Inspect and lubricate	X		X		X		1
Fuel lines and fittings	Inspect for leaks	X	X	X	X	X	X	1
Fuel pump filter	Replace						X	1
Brake and clutch fluid	Check levels and condition	X	X	X	X	X	X	4
Brake pads and discs	Inspect for wear	X	X	X	X	X	X	
Spark plugs	Inspect	X	X	X	X	X	X	
	Replace					X		
Electrical equipment and switches	Check operation	X	X	X	X	X	X	
Steering head bearings		Adjust and lubricate every 2500 miles 4000 kilometers .						1, 3
Rear fork bearings (if applicable)	Repack					X		1
Springer rocker bearings	Adjust	X		X		X		1, 5
Caliper mount bracket and front fender strut bushings	Replace			X			X	
Critical fasteners	Check tightness	X		X		X		1
Battery	Check battery and clean							2

	connections							
Exhaust system	Inspect for leaks, cracks, and loose or missing fasteners or heat shields	X	X	X	X	X	X	2
Road test	Verify component and system functions	X	X	X	X	X	X	
NOTES:	1. Should be performed by an authorized Harley-Davidson dealer, unless you have the proper tools, service data and are mechanically qualified. 2. Perform annually. 3. Disassemble, lubricate and inspect every 20,000 miles 32,000 kilometers . 4. Change D.O.T. 4 fluid and flush brake system every two years. 5. Adjust at 500 miles 800 kilometers .							

Owner's Maintenance Records: All Softail Springers

SERVICE MILE INTERVAL	DATE	DEALER NUMBER	TECHNICIAN NAME	TECHNICIAN SIGNATURE
500 mi 800 km				
1000 mi 1600 km				
2500 mi 4000 km				
5000 mi 8000 km				
7500 mi 12,000 km				
10,000 mi 16,000 km				
12,500 mi 20,000 km				
15,000 mi 24,000 km				
17,500 mi 28,000 km				
20,000 mi 32,000 km				
22,500 mi 36,000 km				
25,000 mi 40,000 km				
27,500 mi 44,000 km				
30,000 mi 48,000 km				
32,500 mi 52,000 km				
35,000 mi 56,000 km				
37,500 mi 60,000 km				
40,000 mi 64,000 km				
42,500 mi 68,000 km				
45,000 mi 72,000 km				
47,500 mi 76,000 km				
50,000 mi 80,000 km				

[illegible]				

Service Literature

Refer to Service Literature: 2009 FXSTSSE3. Visit any Harley-Davidson dealer or go to www.harley-davidson.com to purchase a service or parts manual for your motorcycle. Factory authorized manuals are the most complete and detailed source of information outside of your Harley-Davidson dealer.

Service Literature: 2009 FXSTSSE3

DOCUMENT	LANGUAGE	PART NUMBER
Softail Models Service Manual	English	99482-09
FXSTSSE3 Service Manual Supplement	English	99494-09
FXSTSSE3 Service Manual Supplement	French	99494-09FR
FXSTSSE3 Service Manual Supplement	German	99494-09GE
FXSTSSE3 Service Manual Supplement	Spanish	99494-09SP
FXSTSSE3 Service Manual Supplement	Italian	99494-09IT
Softail Models Electrical Diagnostics Manual	English	99498-09
Softail Models Service and Electrical Diagnostics Manual	French	99482-09FR
Softail Models Service and Electrical Diagnostics Manual	German	99482-09GE
Softail Models Service and Electrical Diagnostics Manual	Spanish	99482-09SP
Softail Models Service and Electrical Diagnostics Manual	Italian	99482-09IT
FXSTSSE3 Parts Catalog	English	99458-09

H-D Michigan, Inc. Trademark Information

Harley, Harley-Davidson, H-D, Bar & Shield, Cross Bones, Digital Tech, Digital Technician, Digital Technician II, Dyna, Electra Glide, Evolution, Fat Bob, Fat Boy, Glaze, Gloss, H-D, H-Dnet.com, HD, Harley, Harley-Davidson, Heritage Softail, Low Rider, Night Rod, Nightster, Night Train, Profile, Revolution, Road Glide, Road King, Road Tech, Rocker, Softail, Sportster, Street Glide, Street Rod, Sun Ray, Sunwash, Tech Link, Twin Cam 88, Twin Cam 88B, Twin Cam 96, Twin Cam 96B, Twin Cam 103, Twin Cam 103B, Twin Cam 110, Twin Cam 110B, Tour-Pak, Screamin' Eagle, Softail, Super Glide, SYN3, Ultra Classic, V-Rod, VRSC and Harley-Davidson Genuine Motor Parts and Genuine Motor Accessories are among the trademarks of H-D Michigan, Inc.

Product Registered Marks

Alcantara S.p.A., Allen, Amp Multilock, Bluetooth, Brembo, Delphi, Deutsch, Dunlop, Dynojet, Fluke, G.E. Versilube, Gunk, Hydroseal, Hylomar, Kevlar, Lexan, Loctite, Lubriplate, Keps, K&N, Magnaflux, Marson Thread-Setter Tool Kit, MAXI fuse, Molex, MPZ, Mulitilock, Novus, Packard, Pirelli, Permatex, Philips, PJ1, Pozidriv, Robinair, S100, Sems, Snap-on, Teflon, Threadlocker, Torca, Torco, TORX, Tufoil, Tyco, Ultratorch, Velcro, X-Acto, and XM Satellite Radio are among the trademarks of their respective owners.