Safety First

Safe Operating Rules

⚠WARNING

Motorcycles are different from other vehicles. They operate, steer, handle and brake differently. Unskilled or improper use could result in loss of control, death or serious injury. (00556c)

- Take a rider training course.
- Read Owner's Manual before riding, adding accessories or servicing.
- Wear a helmet, eye protection and protective clothing.
- Never tow a trailer.

Before operating your new motorcycle it is your responsibility to read and follow the operating and maintenance instructions in this manual, and follow these basic rules for your personal safety.

- Know and respect the rules of the road (see Rules of the Road). Carefully read and observe the rules contained in the RIDING TIPS booklet accompanying this Owner's Manual. Read and familiarize yourself with the contents of the MOTORCYCLE HANDBOOK for your state.
- Before starting engine, check for proper operation of brake, clutch, shifter, throttle controls, correct fuel and oil supply.

⚠WARNING

Do not use aftermarket parts and custom made front forks which can adversely affect performance and handling. Removing or altering factory installed parts can adversely affect performance and could result in death or serious injury. (00001a)

- Use only Harley-Davidson approved parts and accessories. Use of certain other manufacturer's performance parts will void your new motorcycle warranty. See your Harley-Davidson dealer for details.

⚠WARNING

Stop the engine when refueling or servicing the fuel system. Do not smoke or allow open flame or sparks near gasoline. Gasoline is extremely flammable and highly explosive, which could result in death or serious injury. (00002a)

When refueling your motorcycle, the following rules should be observed.

- Refuel in a well ventilated area with the engine turned off.
- Remove fuel filler cap slowly.
- Do not smoke or allow open flames or sparks when refueling or servicing the fuel system.
- Do not fill fuel tank above the bottom of the filler neck insert.
- Leave air space to allow for fuel expansion.

⚠WARNING

Do not store motorcycle with gasoline in tank within the home or garage where open flames, pilot lights, sparks or electric motors are present. Gasoline is extremely flammable and highly explosive, which could result in death or serious injury. (00003a)

⚠WARNING

Engine exhaust from this product contains chemicals known to the State of California to cause cancer, and birth defects or other reproductive harm. (00004f)

⚠WARNING

Do not run motorcycle in a closed garage or confined area. Inhaling motorcycle exhaust, which contains poisonous carbon monoxide gas, could result in death or serious injury. (00005a)

⚠WARNING

The jiffy stand locks when placed in the full forward (down) position with vehicle weight on it. If the jiffy stand is not in the full forward (down) position with vehicle weight on it, the vehicle can fall over which could result in death or serious injury. (00006a)

⚠WARNING

Be sure jiffy stand is fully retracted before riding. If jiffy stand is not fully retracted, it can contact the road surface causing a loss of vehicle control, which could result in death or serious injury. (00007a)

- A new motorcycle must be operated according to the special break-in procedure. See Break-in Riding Rules.
- Operate motorcycle only at moderate speed and out of traffic until you have become thoroughly familiar with its operation and handling characteristics under all conditions.

NOTE:

We recommend that you obtain information and formal training in the correct motorcycle riding technique. In the United States, the Motorcycle Safety Foundation® offers beginning and

advanced rider safety courses. Call 800-446-9227 for information.

⚠WARNING

Travel at speeds appropriate for road and conditions and never travel faster than posted speed limit. Excessive speed can cause loss of vehicle control, which could result in death or serious injury. (00008a)

- Do not exceed the legal speed limit or drive too fast for existing conditions. Always reduce speed when poor driving conditions exist. High speed increases the influence of any other condition affecting stability and increases the possibility of loss of control.
- Pay strict attention to road surfaces and wind conditions. Any two wheeled vehicle may be subject to upsetting forces such as wind blasts from passing trucks, holes in the pavement, rough road surfaces, rider control error, etc. These forces may influence the handling characteristics of your motorcycle. If this happens, reduce speed and guide the motorcycle with a relaxed grip to a controlled condition. Do not brake abruptly or force the handlebar. This may aggravate an unstable condition.
- Keep cargo weight concentrated close to the motorcycle and as low as possible to minimize the change in the motorcycle's center of gravity. Distribute weight evenly on both sides of the vehicle and do not load bulky items too far behind the rider or add weight to the handlebars or front forks. Do not exceed maximum specified load in each saddlebag.

NOTE:

New riders should gain experience under various conditions while driving at moderate speeds.

- Operate your motorcycle defensively. Remember, a motorcycle does not afford the same protection as an automobile in an accident. One of the most common accident situations occurs when the driver of the other vehicle fails to see or recognize a motorcycle and turns left into the on-coming motorcyclist. Operate only with headlamp on.
- Wear an approved helmet, clothing, and foot gear suited for motorcycle riding. Bright or light colors are best for greater visibility in traffic, especially at night. Avoid loose, flowing garments and scarves.

⚠WARNING

Avoid contact with exhaust system and wear protective clothing that completely covers legs while riding. Exhaust pipes and mufflers get very hot when engine is running and remain too hot to touch, even after engine is turned off. Failure to wear protective clothing could result in burns or other serious injury. (00009a)

- When carrying passengers, it is your responsibility to instruct them on proper riding procedures. (See the RIDING TIPS booklet included in your Harley-Davidson Owner's Kit.)

- Do not allow other individuals, under any circumstances, to operate your motorcycle unless you know they are experienced, licensed riders and are thoroughly familiar with the operation of your particular motorcycle.

- Protect your motorcycle against theft. After parking your motorcycle, lock the steering head and remove ignition key from switch. Set security alarm if present.
- Safe motorcycle operation requires alert mental judgment combined with a defensive driving

attitude. Do not allow fatigue, alcohol or drugs to endanger your safety or that of others.

- Vehicles equipped with a sound system should have the volume adjusted to a non-distracting level before operating vehicle.
- Maintain your motorcycle in proper operating condition in accordance with Regular Service Intervals: 2010 FXDFSE2 Models. Particularly important to motorcycle stability is proper tire inflation pressure, tread condition, and proper adjustment of wheel bearings and steering head bearings.

⚠WARNING

Do not operate vehicle with forks locked. Locking the forks restricts the vehicle's turning ability, which could result in death or serious injury. (00035a)

⚠WARNING

Perform the service and maintenance operations as indicated in the regular service interval table. Lack of regular maintenance at the recommended intervals can affect the safe operation of your motorcycle, which could result in death or serious injury. (00010a)

⚠WARNING

Do not operate motorcycle with loose, worn or damaged steering or suspension systems. Contact a Harley-Davidson dealer for repairs. Loose, worn or damaged steering or suspension components can adversely affect stability and handling, which could result in death or serious injury. (00011a)

⚠WARNING

Regularly inspect shock absorbers and front forks. Replace leaking, damaged or worn parts that can adversely affect stability and handling, which could result in death or serious injury. (00012a)

⚠WARNING

Use Harley-Davidson replacement fasteners. Aftermarket fasteners can adversely affect performance, which could result in death or serious injury. (00013a)

- See your Harley-Davidson service manual for proper torque values.
- Aftermarket fasteners may not have the specific property requirements to perform properly.

⚠WARNING

Be sure tires are properly inflated, balanced and have

adequate tread. Inspect your tires regularly and see a Harley-Davidson dealer for replacements. Riding with excessively worn, unbalanced or under-inflated tires can adversely affect stability and handling, which could result in death or serious injury. (00014a)

⚠WARNING

Replace punctured or damaged tires. In some cases, small punctures in the tread area may be repaired from within the demounted tire by a Harley-Davidson dealer. Speed should NOT exceed 50 mph (80 km/h) for the first 24 hours after repair, and the repaired tire should NEVER be used over 80 mph (130 km/h). Failure to follow this warning could result in death or serious injury. (00015a)

⚠WARNING

Do not exceed the motorcycle's Gross Vehicle Weight Rating (GVWR) or Gross Axle Weight Rating (GAWR). Exceeding these weight ratings can affect stability and handling, which could result in death or serious injury. (00016e)

- GVWR is the sum of the weight of the motorcycle, accessories, and the maximum weight of the rider, passenger and cargo that can be safely carried.
- The GVWR is shown on the information plate, located on the frame steering head or the frame downtube.
- GAWR is the maximum amount of weight that can be safely carried on each axle.

⚠WARNING

Do not tow a disabled motorcycle. Towing can adversely affect stability and handling, which could result in death or serious injury. (00017a)

⚠WARNING

Do not pull a trailer with a motorcycle. Pulling a trailer can cause tire overload, reduced braking efficiency and adversely affect stability and handling, which could result in death or serious injury. (00018b)

⚠CAUTION

Direct contact of D.O.T. 4 brake fluid with eyes can cause irritation. Avoid eye contact. In case of eye contact flush with large amounts of water and get medical attention. Swallowing large amounts of D.O.T. 4 brake fluid can cause digestive discomfort. If swallowed, obtain medical attention. Use in well ventilated area. KEEP OUT OF

REACH OF CHILDREN. (00240a)

⚠WARNING

Batteries, battery posts, terminals and related accessories contain lead and lead compounds, and other chemicals known to the State of California to cause cancer, and birth defects or other reproductive harm. Wash hands after handling. (00019e)

⚠WARNING

Do not open storage compartments while riding. Distractions while riding can lead to loss of control, which could result in death or serious injury. (00082a)

⚠WARNING

Consult a Harley-Davidson dealer regarding any questions or problems that occur in the operation of your motorcycle. Failure to do so can aggravate an initial problem, cause costly repairs, cause an accident and could result in death or serious injury. (00020a)

- Be sure all equipment required by federal, state and local law is installed and in good operating condition.

Rules of the Road

- Always sound your horn, actuate your turn signals, and exercise caution when passing other vehicles going in the same direction. Never try to pass another vehicle going in the same direction at street intersections, on curves, or when going up or down a hill.
- At street intersections give the right-of-way. Do not presume you have the right-of-way, as the other driver may not know it is your turn.
- Always signal when preparing to stop, turn or pass.
- All traffic signs, including those used for the control of traffic at intersections, should be obeyed promptly. SLOW DOWN signs near schools and CAUTION signs at railroad crossings should always be observed and your actions governed accordingly.
- When intending to turn, signal at least 100 feet 30.5 meters before reaching the turning point. If turning across an intersection, move over to the centerline of the street (unless local rules require otherwise). Slow down when entering the intersection and turn carefully.
- Never anticipate a traffic light. When a change is indicated from GO to STOP (or vice versa) in the traffic control systems at intersections, slow down and wait for the light to change. Never run through a yellow or red traffic light.
- While turning either right or left, watch for pedestrians, animals, as well as vehicles.
- Do not leave the curb or parking area without signaling. Be sure your way is clear to enter moving traffic. A moving line of traffic always has the right-of-way.
- Be sure your license plate is installed in the position specified by law and is clearly visible at all times. Keep the plate clean.
- Ride at a safe speed that is consistent with the type of highway you are on. Pay strict attention to whether the road is dry, oily, icy or wet.

- Watch for debris such as leaves or loose gravel.
- Weather and traffic conditions on the highway dictate adjusting your speed and driving habits accordingly.

Accessories and Cargo

Harley-Davidson Motor Company cannot test and make specific recommendations concerning every accessory or combination of accessories sold. Therefore, the rider must be responsible for safe operation of the motorcycle when installing accessories or carrying additional weight.

⚠WARNING

See the Accessory and Cargo section in your Owner's Manual. Improper loading of cargo or installation of accessories can affect motorcycle stability and handling, which could result in death or serious injury. (00021a)

⚠WARNING

Do not exceed the motorcycle's Gross Vehicle Weight Rating (GVWR) or Gross Axle Weight Rating (GAWR). Exceeding these weight ratings can affect stability and handling, which could result in death or serious injury. (00016e)

- GVWR is the sum of the weight of the motorcycle, accessories, and the maximum weight of the rider, passenger and cargo that can be safely carried.
- GAWR is the maximum amount of weight that can be safely carried on each axle.
- The GVWR and GAWR are shown on the information plate which is located on the frame down tube in some destinations.

⚠WARNING

Do not pull a trailer with a motorcycle. Pulling a trailer can cause tire overload, reduced braking efficiency and adversely affect stability and handling, which could result in death or serious injury. (00018b)

Accessory and Cargo Guidelines

The following guidelines should be used when equipping a motorcycle, carrying passengers and/or cargo.

⚠WARNING

Travel at speeds appropriate for road and conditions and never travel faster than posted speed limit. Excessive speed can cause loss of vehicle control, which could result in death or serious injury. (00008a)

- Do not exceed the legal speed limit or drive too fast for existing conditions. Always reduce speed when poor driving conditions exist. High speed increases the influence of any other condition affecting stability and increases the possibility of loss of control.
- Pay strict attention to road surfaces and wind conditions. Any two wheeled vehicle may be subject to upsetting forces such as wind blasts from passing trucks, holes in the pavement, rough road surfaces, rider control error, etc. These forces may influence the handling characteristics of your motorcycle. If this happens, reduce speed and guide the motorcycle with a relaxed grip to a controlled condition. Do not brake abruptly or force the handlebar. This may aggravate an unstable condition.
- Keep cargo weight concentrated close to the motorcycle and as low as possible. This minimizes the change in the motorcycle's center of gravity.
- Distribute weight evenly on both sides of the vehicle.
- Do not load bulky items too far behind the rider or add weight to the handlebars or front forks.
- Do not exceed maximum specified load in each saddlebag.
- Luggage racks are designed for lightweight items. Do not overload racks.
- Be sure cargo is secure and will not shift while riding and recheck the cargo periodically. Accessories that change the operator's riding position may increase reaction time and affect handling of the motorcycle.
- Additional electrical equipment may overload the motorcycle's electrical system possibly resulting in electrical system and/or component failure.

⚠WARNING

The front and/or rear guard(s) can provide limited leg and cosmetic vehicle protection under unique circumstances. (Fall over while stopped, very slow speed slide.) It is not made or intended to provide protection from bodily injury in a collision with another vehicle or any other object. (00022a)

Large surfaces such as fairings, windshields, back rests, and luggage racks can adversely affect handling. Only genuine Harley-Davidson items designed specifically for the motorcycle model should be used with proper installation.

⚠WARNING

Do not use aftermarket parts and custom made front forks which can adversely affect performance and handling. Removing or altering factory installed parts can adversely affect performance and could result in death or serious injury. (00001a)

⚠WARNING

Only Touring Harley-Davidson Motorcycles are suitable for sidecar use. Consult a Harley-Davidson dealer. Use of motorcycles other than Touring models with sidecars could result in death or serious injury. (00040a)

Noise Control System

Tampering

Owners are warned that removal or replacement of any noise control system component may be prohibited by law. This prohibition applies prior to vehicle sale or delivery to the ultimate purchaser. Use of a vehicle on which noise control system components have been removed or rendered inoperative may also be prohibited by law.

Identification

Vehicle Identification Number (V.I.N.)

General

See Typical Harley-Davidson V.I.N.: 2010 FXDFSE2 Models. A unique 17-digit serial or Vehicle Identification Number (V.I.N.) is assigned to each motorcycle. For a description of each item in the V.I.N., refer to Harley-Davidson V.I.N. Breakdown: 2010 FXDFSE2 Models.

Location

See V.I.N. Locations. The full 17-digit V.I.N. is stamped on the right side of the frame near the steering head. In some destinations, a printed V.I.N. label is also attached to the right front downtube.

Abbreviated V.I.N.

An abbreviated V.I.N. showing the vehicle model, engine type, model year, and sequential number is stamped on the left side of the crankcase between the engine cylinders.

NOTE:

Always give the full 17-digit Vehicle Identification Number when ordering parts or making any inquiry about your motorcycle.

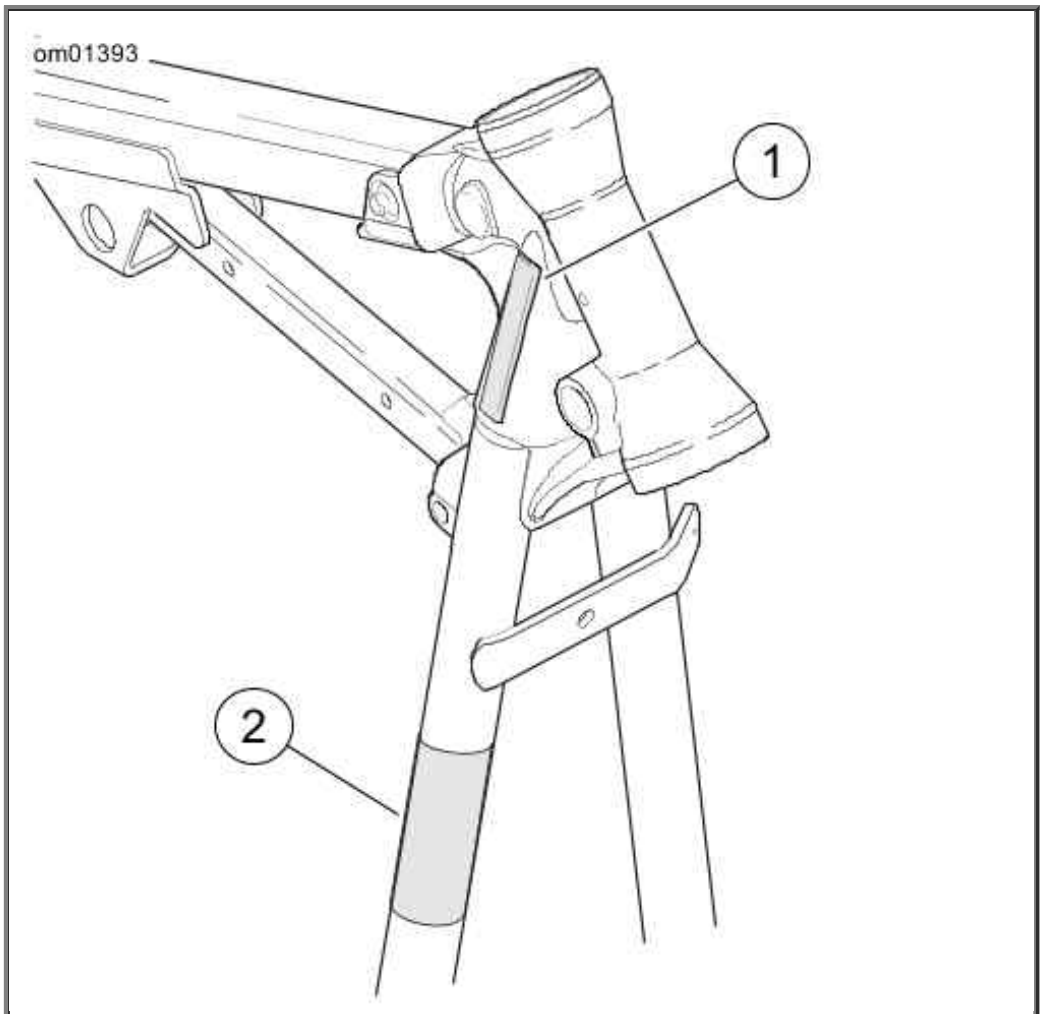

1. Stamped V.I.N.
2. V.I.N. label

V.I.N. Locations

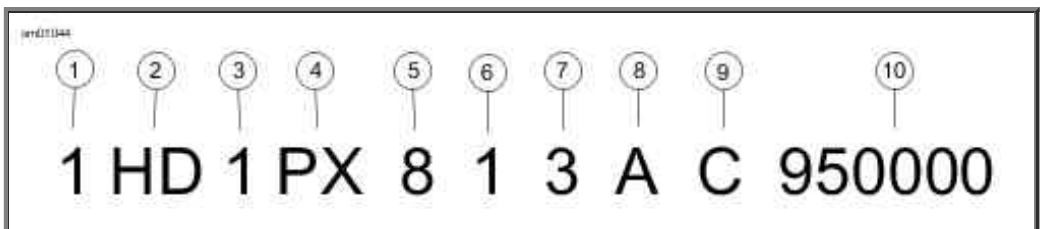

Typical Harley-Davidson V.I.N.: 2010 FXDFSE2 Models

Harley-Davidson V.I.N. Breakdown: 2010 FXDFSE2 Models

POSITION	DESCRIPTION	POSSIBLE VALUES
1	Market designation	1=Originally manufactured for sale **within** the United States 5=Originally manufactured for sale **outside** of the United States
2	Manufacturer/vehicle type	HD=Harley-Davidson motorcycle
3	Motorcycle type	1=Heavyweight motorcycle (901 cc and larger)
4	Model	PX=FXDFSE2 Custom Vehicle Operations Fat Bob™ PX=FXDF2-CVO (Japan only)
5	Engine type	

		4=Twin Cam 96™, 1584 cc air-cooled, fuel-injected 8=110 cu. in. (1800 cc) air-cooled, fuel-injected	
6	Introduction date/calibration	**Normal Introduction** 1=Domestic 3=California A=Canada C=HDI E=Japan G=Australia J=Brazil	**Mid-year or Special Introduction** 2, 4=Domestic 5, 6=California B=Canada D=HDI F=Japan H=Australia K=Brazil
7	V.I.N. check digit	Can be 0-9 or X	
8	Model year	A=2010	
9	Assembly plant	C=Kansas City, MO U.S.A.	
10	Sequential number	varies	

Labels

See Labels: Dyna Models for safety and maintenance labels which were on the vehicle when new. If removed, replacement labels may be purchased for your motorcycle. Refer to Labels: FXDFSE2 for label descriptions.

NOTE:

Some labels may be available in different languages for destinations outside the U.S. See a Harley-Davidson dealer for all labels available for purchase.

Labels: FXDFSE2

LABEL	PART NO.	DESCRIPTION	LOCATION
1	29180-07	General warnings	Top of upper belt guard.
2	15368-01A	Battery warning	Top of battery tray cover.
3	13569-06	Fuse block label	Inside left side cover.

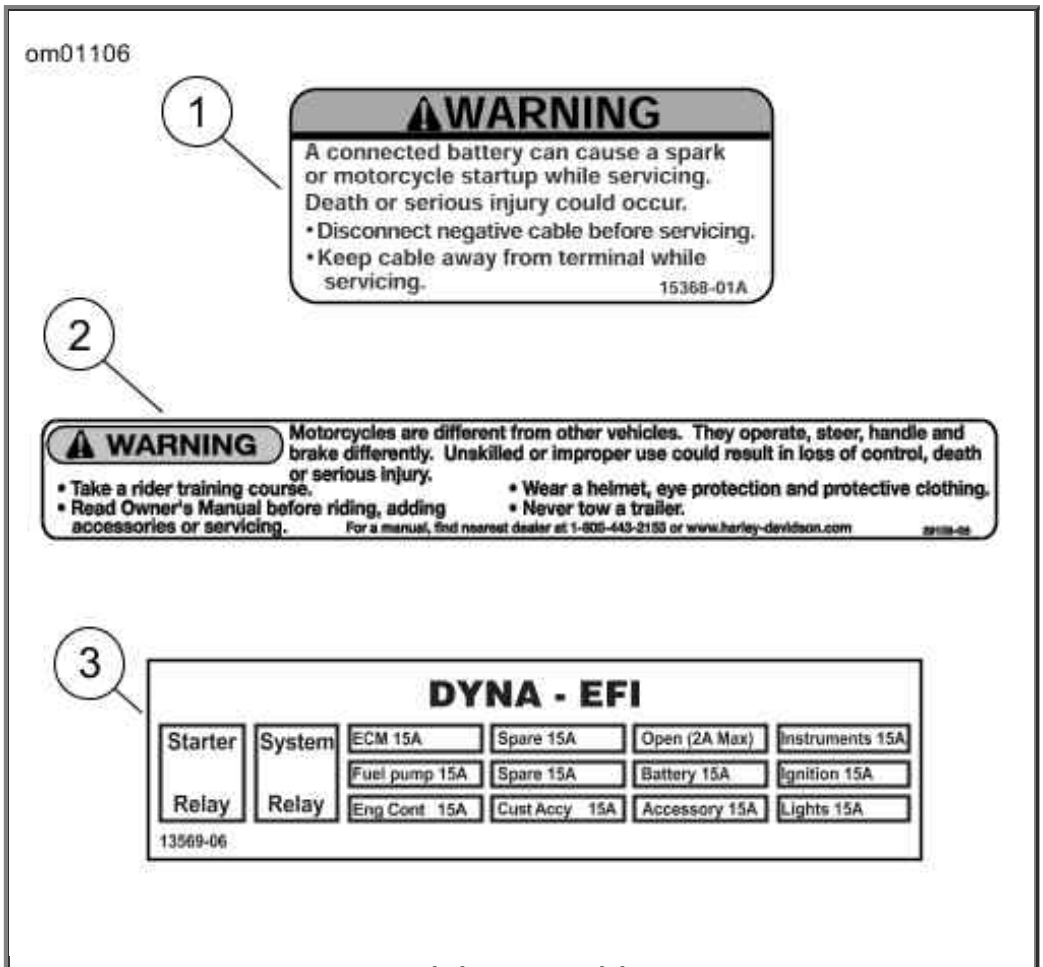

Labels: Dyna Models

Specifications

Specifications

Engine

ITEM	SPECIFICATION	
Number of cylinders	2	
Type	4-cycle, 45 degree V-Type, air-cooled	
Compression ratio	9.15:1	
Bore	4.00 in	101.60 mm
Stroke	4.380 in	111.25 mm
Displacement	110 in^3	1802.58 cc
Torque	114.60 ft-lbs @ 3500 RPM	155.40 Nm @ 3500 RPM

Transmission

TRANSMISSION	SPECIFICATION

TRANSMISSION	SPECIFICATION
Type	Constant mesh, foot shift
Speeds	6 forward

Electrical

COMPONENT	SPECIFICATION	
Ignition timing	Not adjustable	
Battery	12 volt, 19 amp-hr, sealed and maintenance-free	
Charging system	Three-phase, 40-amp system (493W @ 13.5V, 2000 rpm, 540W max power @ 13.5V)	
Spark plug type	HD-6R12	
Spark plug size	12 mm	
Spark plug gap	0.038-0.043 in.	0.97-1.09 mm
Spark plug torque	12-18 ft-lbs	16.3-24.4 Nm

NOTE:

Specifications in this publication may not match those of official certification in some markets due to timing of publication printing, variance in testing methods, and/or vehicle differences. Customers seeking officially recognized regulatory specifications for their vehicle should refer to certification documents and/or contact their respective dealer or distributor.

Capacities

ITEM	U.S.	LITERS
Fuel tank (total)	5.00 gal	18.93
Oil tank with filter	3.00 qt	2.84
Transmission (approximate)	1.00 qt	0.95
Primary chaincase (approximate)	1.00 qt	0.95
Low fuel warning light on	1.00 gal	3.785

Sprocket Teeth

DRIVE	ITEM	NUMBER OF TEETH
Primary	Engine	34
	Clutch	46
Final	Transmission	32
	Rear wheel	66*
*64 teeth on Japanese models		

Gear Ratios

GEAR	RATIO	
	DOMESTIC AND INTERNATIONAL	JAPANESE MODELS
1st Gear	9.311	9.029
2nd Gear	6.454	6.259
3rd Gear	4.793	4.648
4th Gear	3.882	3.764
5th Gear	3.307	3.207
6th Gear	2.790	2.706

NOTE:

Gross Vehicle Weight Rating (GVWR) (maximum allowable loaded vehicle weight) and corresponding Gross Axle Weight Ratings (GAWR) are given on a label located on the frame below the steering head.

Weights

ITEM	LB	KG
Weight as shipped from factory	692	313.89
GVWR	1085	492.15
GAWR front	390	176.90
GAWR rear	695	315.25

Dimensions

ITEM	IN	MM
Wheelbase	63.6	1615.44
Overall length	91.0	2311.40
Overall width	36.6	929.64
Road clearance	4.33	109.98
Overall height	45.5	1155.7
Saddle height*	26.2	665.48
*With 180 lb 81.7 kg rider on seat		

Tires

MOUNT	SIZE	NUMBER	PRESSURE (COLD)	
			PSI	kPa
Front	16 in	Dunlop D427 130/90B16	36	248
Rear	16 in	Dunlop D427 180/70B16	40	275

Bulb Chart

LAMP	DESCRIPTION	BULBS REQUIRED	CURRENT DRAW (AMPERAGE)	H-D PART NUMBER
Headlamp	Fat Bob headlamp	2	5.0/4.58	69838-08
	Position lamp international	1	0.32	53438-92
Tail/stop lamp	Illuminated with LEDs. Replace entire assembly upon failure.			
Turn signal lamp	Front/running	2	2.25/0.59	69331-02
	Front international	2	1.75	68163-84
	Rear	2	2.25	69330-02
	Rear international	2	1.75	68163-84
Instrument panel indicators	High beam indicator	Illuminated with LEDs. Replace entire assembly upon failure.		
	Oil pressure indicator			
	Neutral indicator			
	Turn signal indicators			
Fuel gauge	LED built into gauge.			

Tire Data

⚠WARNING

Match tires, tubes, air valves and caps to the correct wheel rim. Contact a Harley-Davidson dealer. Mismatching can result in damage to the tire bead, allow tire slippage on the rim or cause tire failure, which could result in death or serious injury. (00023a)

⚠WARNING

Use only Harley-Davidson approved tires. See a Harley-Davidson dealer. Using non-approved tires can adversely affect stability, which could result in death or serious injury. (00024a)

Tubeless tires fitted with the correct size inner tubes may be used on all Harley-Davidson laced

(wire spoked) wheels. Protective rubber rim strips must be used with tubeless tires (fitted with correct size inner tubes) when mounted on laced (wire spoked) wheels.

⚠WARNING

Use inner tubes on laced (wire spoked) wheels. Using tubeless tires on laced wheels can cause air leaks, which could result in death or serious injury. (00025a)

Tubeless tires are used on all Harley-Davidson cast and disc wheels.

Tire sizes are molded on the tire sidewall. Inner tube sizes are printed on the tube.

⚠WARNING

Harley-Davidson front and rear tires are not the same. Interchanging front and rear tires can cause tire failure, which could result in death or serious injury. (00026a)

⚠WARNING

Do not inflate tire beyond maximum pressure as specified on sidewall. Over inflated tires can blow out, which could result in death or serious injury. (00027a)

⚠WARNING

Harley-Davidson tires are equipped with wear bars that run horizontally across the tread. When wear bars become visible and only 1/32 in. (0.8 mm) tread depth remains, replace tire immediately. Using a worn tire can adversely affect stability and handling, which could result in death or serious injury. Use only Harley-Davidson approved replacement tires. (00090b)

See Specifications for tire pressures and sizes.

Gasoline Blends

Your motorcycle was designed to get the best performance and efficiency using unleaded gasoline. Most gasoline is blended with alcohol and/or ether to create oxygenated blends. The type and amount of alcohol or ether added to the fuel is important.

CAUTION

Do not use gasoline that contains methanol. Doing so can result in fuel system component failure, engine damage and/or equipment malfunction. (00148a)

- Gasoline containing METHYL TERTIARY BUTYL ETHER (MTBE): Gasoline/MTBE blends are a mixture of gasoline and as much as 15% MTBE. Gasoline/MTBE blends can be used in your motorcycle.
- ETHANOL is a mixture of 10% ethanol (Grain alcohol) and 90% unleaded gasoline. Gasoline/ethanol blends can be used in your motorcycle if the ethanol content does **not** exceed 10%.
- REFORMULATED OR OXYGENATED GASOLINES (RFG): Reformulated gasoline is a term used to describe gasoline blends that are specifically designed to burn cleaner than other types of gasoline, leaving fewer tailpipe emissions. They are also formulated to evaporate less when you are filling your tank. Reformulated gasolines use additives to oxygenate the gas. Your motorcycle will run normally using this type of gas and Harley-Davidson recommends you use it when possible, as an aid to cleaner air in our environment.
- Do not use race gas or octane boosters. Use of these fuels will damage the fuel system.

Some gasoline blends might adversely affect the starting, driveability or fuel efficiency of the motorcycle. If any of these problems are experienced, try a different brand of gasoline or gasoline with a higher octane blend.

Fuel

Refer to Octane Ratings. Always use a good quality unleaded gasoline. Octane ratings are usually found on the pump.

⚠WARNING

Avoid spills. Slowly remove filler cap. Do not fill above bottom of filler neck insert, leaving air space for fuel expansion. Secure filler cap after refueling. Gasoline is extremely flammable and highly explosive, which could result in death or serious injury. (00028a)

⚠WARNING

Use care when refueling. Pressurized air in fuel tank can force gasoline to escape through filler tube. Gasoline is extremely flammable and highly explosive, which could result in death or serious injury. (00029a)

Modern service station pumps dispense a high flow of gasoline into a motorcycle fuel tank making air entrapment and pressurization a possibility.

Octane Ratings

SPECIFICATION	RATING
Pump Octane (R+M)/2	91 (95 RON)

Catalytic Converter

The motorcycle is equipped with catalytic converters.

CAUTION

Do not operate catalytic converter-equipped vehicle with engine misfire. If you operate the vehicle under this condition, the exhaust will become abnormally hot, which can cause vehicle damage, including emission control loss. (00149c)

CAUTION

Use only unleaded fuel in catalytic converter-equipped motorcycles. Using leaded fuel will damage the emission control system. (00150b)

Controls and Indicators

General: Controls and Indicators

⚠WARNING

Read the CONTROLS AND INDICATORS section before riding your motorcycle. Failure to understand the operation of the motorcycle could result in death or serious injury. (00043a)

Some features explained are unique to certain models. These features may be available as accessories for your Harley-Davidson motorcycle. See a Harley-Davidson dealer for a complete list of accessories that will fit your specific motorcycle.

Ignition/Headlamp Key Switch

⚠WARNING

The automatic-on headlamp feature provides increased visibility of the rider to other motorists. Be sure headlamp is on at all times. Poor visibility of rider to other motorists can result in death or serious injury. (00030b)

See YOUR OWNER'S MANUAL section. Be sure to record all your key numbers in the space provided at the front of this book.

The ignition/headlamp key switch controls electrical functions of the motorcycle. Refer to Ignition/Headlamp Key Switch Positions for key switch functions.

CAUTION

Protect your vehicle against theft. After parking your

Protect your vehicle against theft. After parking your motorcycle, lock the steering head and remove ignition key from switch. Failure to lock your motorcycle may result in theft and/or equipment damage. (00151a)

CAUTION

Do not lubricate barrel locks with petroleum based lubricants or graphite. Inoperative locks may result. (00152a)

See Ignition/Headlamp Key Switch: FXDFSE2. The key switch can be locked in the OFF or ACCESSORY position. To lock the keyswitch, lift the switch cover, insert key, and turn to the lock position (1/4 turn counterclockwise). Remove the key. The switch will remain locked in its position.

To unlock the key switch, insert key and turn to the unlock position (1/4 turn clockwise). Remove the key. The switch will be free to move to any position.

NOTES:

The lamps work when the switch is in the IGNITION position, as required by law in some localities.

Remove key from ignition before operating motorcycle. If you do not remove key, it can fall out during operation.

Ignition/Headlamp Key Switch Positions

SWITCH POSITION	FUNCTION
OFF	Ignition, lamps and accessories are off.
ACC*	Accessories can be turned on. Instrument lamps and tail lamp are on. Brake lamp and horn can be activated. Tail lamp is on.
IGNITION*	Ignition, lamps and accessories are on.
*International models have an additional function - position lamp is on.	

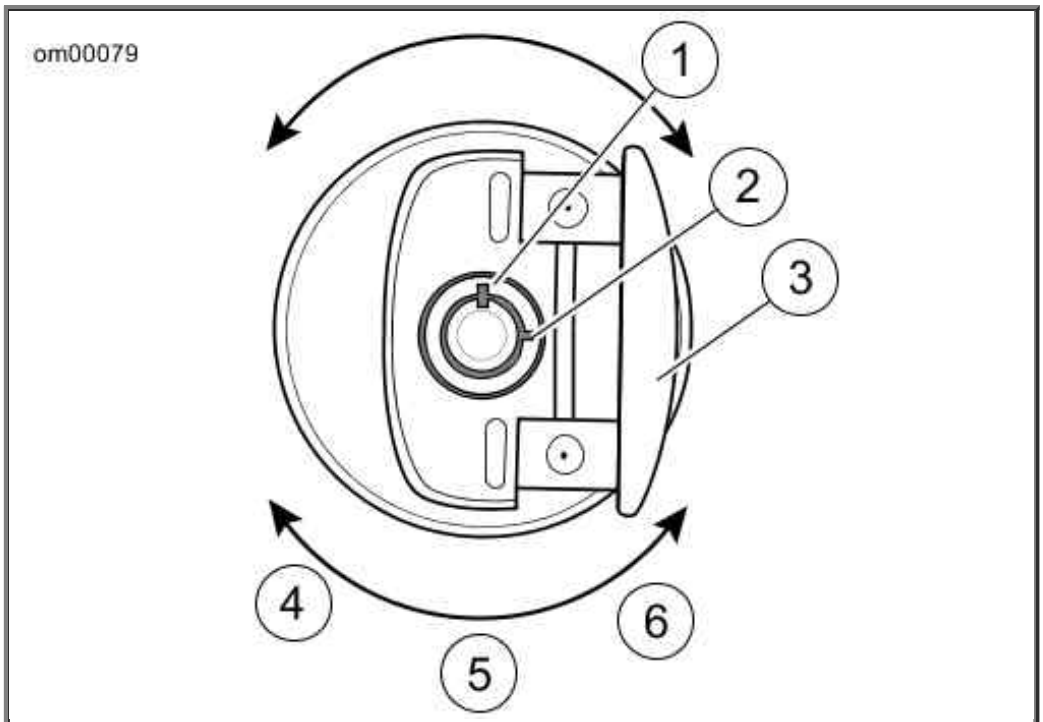

1. Lock position
2. Unlock position
3. Open switch cover
4. Ignition
5. Off (lock)
6. ACC (lock)

Ignition/Headlamp Key Switch: FXDFSE2

Fork Lock

CAUTION

Protect your vehicle against theft. After parking your motorcycle, lock the steering head and remove ignition key from switch. Failure to lock your motorcycle may result in theft and/or equipment damage. (00151a)

See Fork Lock. Softail models have the fork lock incorporated in the steering head on the right side.

⚠WARNING

Do not operate vehicle with forks locked. Locking the forks restricts the vehicle's turning ability, which could result in death or serious injury. (00035a)

Using the fork lock immediately after parking your motorcycle will discourage unauthorized use or theft when parking your motorcycle.

To Lock Fork

1. Turn fork to full left position.

2. Insert ignition key into fork lock.
3. Push in on fork lock and turn to left position.
4. Remove ignition key.

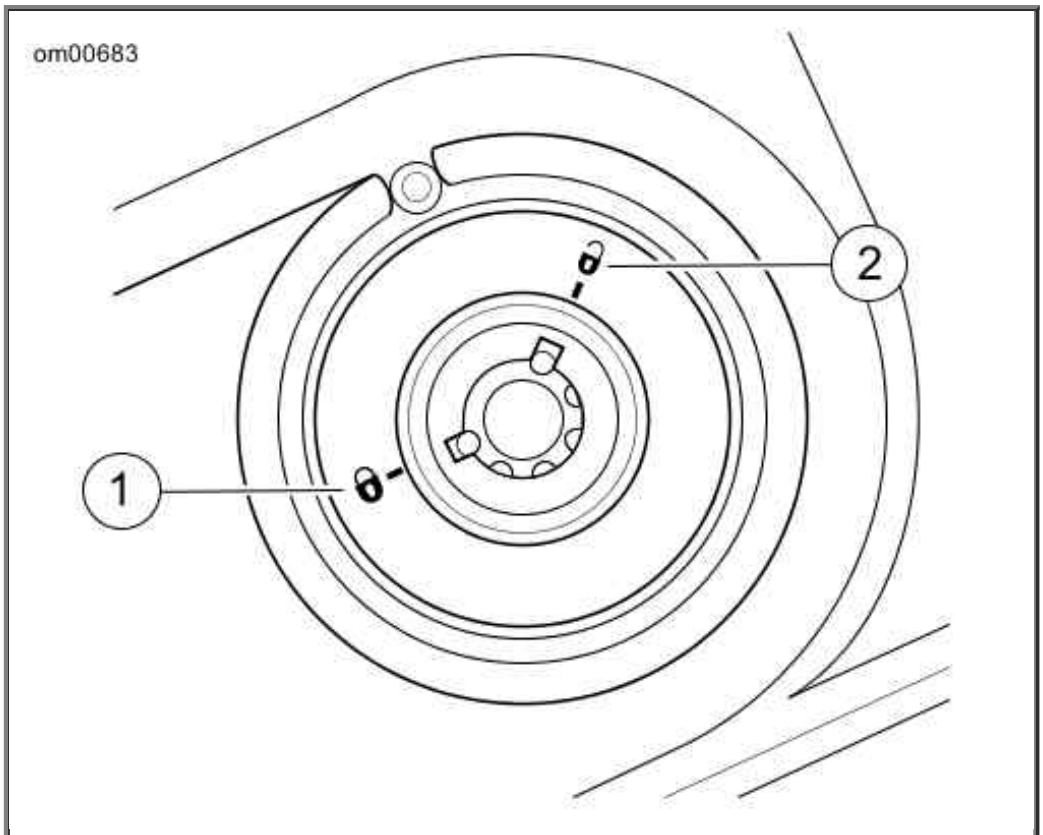

1. Locked
2. Unlocked

Fork Lock

Hand Controls: Basic Operation

Electric Starter Switch

NOTE:

Off/run switch MUST be in RUN position to operate engine.

See Handlebar Controls. The electric starter switch is located on the right handlebar control group. See Starting the Engine for detailed operation procedures.

1. Put the engine off/run switch in the RUN position and the transmission in neutral. Neutral (green) indicator lamp should be illuminated.
2. See Ignition/Headlamp Key Switch: FXDFSE2. Turn ignition/headlamp key switch to IGNITION and push the START switch to operate starter motor.

Engine OFF/RUN Switch

See Handlebar Controls. The engine off/run switch (7) turns the ignition power ON or OFF. The engine off/run switch is located on the right handlebar control. Push the top portion of the engine

off/run switch to turn off ignition power and shut the engine off. Push the bottom portion of the engine off/run switch to turn on ignition power.

NOTES:

- *The engine off/run switch must be in the RUN position to start or operate the engine.*
- *The engine off/run switch should be used to shut the engine off.*

1. To shut the engine off, push the top of the off/run switch to the ignition OFF position.
2. See Ignition/Headlamp Key Switch: FXDFSE2. Turn the ignition key to the OFF position to turn the ignition power completely OFF.

Throttle Control Grip

See Handlebar Controls. The throttle control grip (9) is located on the right handlebar control and is operated with the right hand.

To reduce rider fatigue on long trips, a spring-loaded throttle friction adjustment screw (10) is located at the bottom of the throttle grip clamp on non-cruise equipped models.

1. Slowly turn throttle control grip clockwise (toward the front of the motorcycle) to close the throttle (decelerate).
2. Slowly turn throttle control grip counterclockwise (toward rear of motorcycle) to open the throttle (accelerate).

⚠WARNING

Do not tighten throttle friction adjustment screw to the point where the engine will not return to idle automatically. Over-tightening can lead to loss of vehicle control, which could result in death or serious injury. (00031b)

3. Loosen the throttle friction adjustment screw so the throttle returns to the idle position when the hand is removed from the grip.
4. Screw the throttle adjustment screw in to increase friction on grip. This provides a damping effect on throttle motion.

NOTE:

The throttle friction adjustment screw should not be used under normal stop and go operating conditions.

Clutch Hand Lever

⚠WARNING

Do not position fingers between hand control lever and handlebar grip. Improper hand positioning can impair control lever operation and cause loss of vehicle control, which could result in death or serious injury. (00032a)

See Handlebar Controls. The clutch hand lever (1) is located on the left handlebar and is operated with the fingers of the left hand.

1. Slowly pull clutch hand lever in against handlebar grip to fully disengage clutch.
2. Shift to first gear using the gear shifter lever. See Shifting Gears: Six Speed.
3. Slowly release the clutch hand lever to engage clutch.

A clutch switch is incorporated into the left handlebar switch assembly. It enables the rider to start the vehicle in any gear (or in neutral) as long as the clutch lever is pulled in. If the clutch is not disengaged, the vehicle will not start.

Horn Switch

See Handlebar Controls. The horn is operated by pushing on the horn switch (2) located on the left handlebar control.

Headlamp Dimmer Switch

See Handlebar Controls. The headlamp dimmer switch (3) is located on the left handlebar. The switch has two positions to activate the headlamps high or low beams.

- Press the top of the headlamp dimmer beam switch to activate the high beam.
- Press the bottom of the headlamp dimmer switch to return to the low beam.

See Indicator Lamps. The (blue) high beam indicator lamp will illuminate when the high beam is on.

Turn Signal Switches

See Handlebar Controls. Each handlebar control group contains a turn signal switch.

- The right turn signal switch (11) operates the right front and right rear flashing lamps.
- The left turn signal switch (4) operates the left front and left rear flashing lamps.

NOTE:

Front turn signal lamps also function as running lamps (except International models).

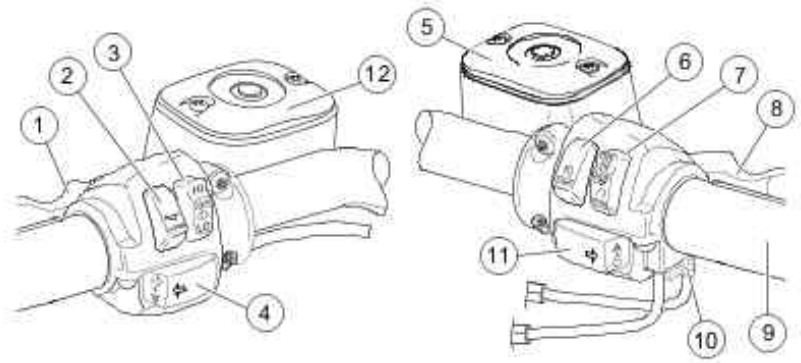

1. Clutch hand lever
2. Horn switch
3. Headlamp dimmer switch
4. Left turn signal switch
5. Front brake master cylinder reservoir
6. Electric starter switch
7. Engine off/run switch
8. Brake hand lever
9. Throttle control grip
10. Throttle friction adjusting screw
11. Right turn signal switch
12. Clutch master cylinder reservoir

Handlebar Controls

Turn Signal Switch Operation

The turn signal switches are used by the turn signal module to control turn signal operation based on vehicle speed, vehicle acceleration and turn completion.

Momentarily depress the desired turn signal switch. The turn signal lamps will begin and continue flashing until they are manually or automatically cancelled. As long as the motorcycle is stationary, the signals will flash.

NOTES:

- *If you are signaling to turn in one direction and you depress the switch for the opposite turn signal, the first signal is cancelled and the opposite side begins flashing.*
- *If you want to stop the lamps from flashing, briefly depress the turn signal switch a second time. The turn signal lamps will stop flashing.*

Hazard Warning

4-Way Flashers

Should it be necessary to park along side a roadway, 4-way flashers can be activated as a hazard warning to traffic.

Activate: Turn the ignition/headlamp key switch to IGNITION and simultaneously press the left and right turn signal switches. The switch can then be turned to the OFF or ACCESSORY position and locked. The flashers will continue for two hours.

Deactivate: Turn the ignition/headlamp key switch to IGNITION and simultaneously press the left and right turn signal switches.

4-Way Flashers with Security System

If it should be necessary to leave the motorcycle parked along side a roadway unattended, the 4-way flashers can be activated and the Harley-Davidson Smart Security System can be armed. See Arming and Disarming.

Instruments

Speedometer

⚠WARNING

Travel at speeds appropriate for road and conditions and never travel faster than posted speed limit. Excessive speed can cause loss of vehicle control, which could result in death or serious injury. (00008a)

CAUTION

Never attempt to tamper with or alter the vehicle odometer. This is illegal. Tampering with or altering a vehicle odometer may cause equipment damage. (00160a)

See Speedometer/Odometer and Tachometer. The speedometer registers miles per hour (U.S. models) or kilometers per hour (international models) of forward speed. The speedometer also provides the following selectable functions:

- Odometer
- Trip odometers A and B
- 12 or 24 hour clock

The speedometer has a single display window for the above functions.

1. See Speedometer/Odometer and Tachometer. Pressing the function switch with the ignition switch in any position will activate the odometer reading and time. Time and mileage or kilometers may be checked without unlocking ignition switch. Press and release function switch once to view odometer. Press and release switch again to display time.

2. To check mileage on trip odometers, the ignition switch must be in the ACC or IGNITION position. Press and release the function switch until the desired trip odometer reading is displayed. An A or B in the upper left of the display window identifies trip odometers.

3. To reset or zero trip odometers, have desired (A or B) odometer in display window. Press function switch and hold switch for 2-3 seconds. The trip odometer will be reset to zero.

4. Repeat the previous step if you wish to zero both trip odometers.

Setting Clock

1. Turn the ignition switch to ACC or IGNITION.
2. See Speedometer/Odometer and Tachometer. Press function switch until time (hour and minutes) is displayed. Press and hold the function switch for five seconds or until 12HR begins to blink in the speedometer display window. Release the button.
3. Press and release the function switch once to advance to a blinking 24HR or military style time display. Each time you press and release the button, the display will switch between 12HR and 24HR.
4. When the desired time style is displayed, press and hold the function switch for five seconds. The display will switch to the time display with the hours blinking.

   NOTE:

   There is no AM or PM time setting required. So when correct hour is reached, press and hold function switch to advance to minute setting.
5. Press and release the function switch repeatedly to advance the hours. Each time you press and release the switch, the display will advance one hour.
6. When the correct hour is displayed, press and hold the function switch for five seconds. The minutes display will start blinking.
7. Press and release the function switch repeatedly to advance the minutes display. Each time you press and release the button, the display will advance one minute.
8. When the correct minutes are displayed, press and hold the function switch for five seconds. The minutes display will stop blinking, indicating that the clock has been set.
9. Turn the ignition switch OFF.

Tachometer

CAUTION

See OPERATING RECOMMENDATIONS section. Do not operate the engine above maximum safe RPM as shown under OPERATION (red zone on tachometer). Lower the RPM by upshifting to a higher gear or reducing the amount of throttle. Failure to lower RPM may cause equipment damage. (00159a)

The tachometer registers the engine speed in revolutions per minute (RPM).

Tip Indicator Lamp

⚠WARNING

If tip occurs, check all controls for proper operation. Restricted control movement can adversely affect the performance of the brakes, clutch or ability to shift, which

could result in loss of vehicle control and death or serious injury. (00350a)

Should motorcycle be tipped over, the word "tip" will appear in the odometer window. Engine will not start until reset. To reset, cycle ignition/headlamp key switch ON-OFF-ON.

Fuel Range Function

The fuel range function shows the approximate mileage available with the amount of fuel left in the fuel tank.

1. With the ignition switch in the ACC or IGNITION position, press function switch until fuel range function is displayed, as indicated by the letter 'r' in the left side of the odometer display. The calculated remaining distance (miles or kilometers) to empty is displayed, based on the amount of fuel in tank. Range can be accessed at any time using the function switch.

2. When the low fuel warning lamp illuminates, the range feature will automatically be displayed in the odometer unless this automatic pop-up feature is disabled by a press and hold of the function switch while in range display mode. Automatic range pop-up feature will show that it is disabled by blinking twice. Likewise, automatic range popup can be reactivated by a press and hold of the function switch. Range will blink once when the automatic pop-up feature is re-enabled.

   NOTE:
   - *When the low fuel warning lamp turns on, the fuel level is low. Refuel as soon as possible.*
   - *The range display is only updated when the vehicle is moving.*

3. After the range calculation reaches 10 miles 16 kilometers remaining, the range display will display "r Lo" to indicate that the vehicle will shortly run out of fuel.

4. Resetting the low fuel warning lamp and range requires an ignition cycle change.

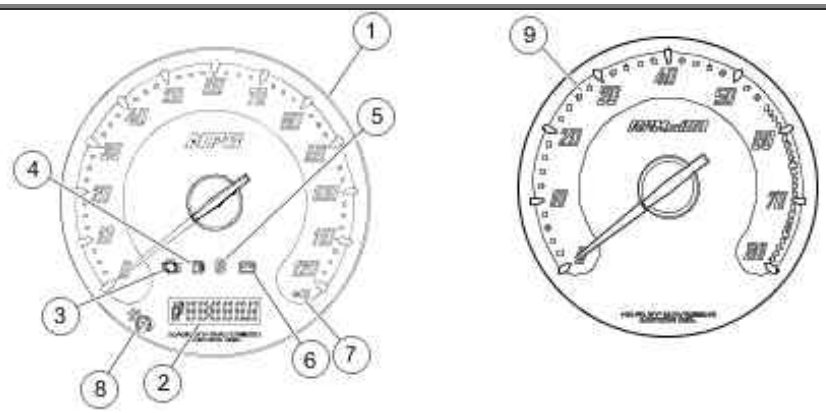

1. Speedometer
2. Odometer/trip odometer/clock
3. Check engine lamp
4. Low fuel warning lamp
5. Sixth gear lamp
6. Battery lamp
7. Security system lamp
8. Not used
9. Tachometer

Speedometer/Odometer and Tachometer

Instrument Lamps

Engine Check Lamp

See Speedometer/Odometer and Tachometer. The engine check lamp is located inside the instrument cluster. Its purpose is to indicate whether or not the engine/engine management system is operating normally. The engine lamp color is amber.

The engine lamp normally comes on when the ignition is first turned on and remains on for approximately 4 seconds, as the engine management system runs a series of self-diagnostics.

If the engine lamp comes on at any other time, see a Harley-Davidson dealer.

Low Fuel Lamp

See Speedometer/Odometer and Tachometer. The amber low fuel lamp lights when the gasoline in the tank reaches the low fuel level (approximate) shown in Capacities.

If the low fuel lamp remains lit after adding fuel or filling the fuel tank, see a Harley-Davidson dealer.

Sixth Gear Lamp

See Speedometer/Odometer and Tachometer. The sixth gear lamp indicates when the transmission is in sixth gear.

Battery Discharge Lamp

See Speedometer/Odometer and Tachometer. The battery lamp indicates either overcharging or undercharging of the battery. Refer to Battery: General.

Security System Lamp

See Speedometer/Odometer and Tachometer. The security system lamp will illuminate when the security system is armed. Refer to Harley-Davidson Smart Security System.

If the security system lamp remains lit after the security system is disarmed, see a Harley-Davidson dealer.

Indicator Lamps

See Indicator Lamps. Five indicator lamps are provided.

- The green TURN indicators will flash when turn signals are activated; therefore, flashing indicates the chosen turn direction. When the 4-way hazard flashers are operating, both turn indicators will flash simultaneously.
- The blue BEAM indicator lamp, when lit, signals high beam headlamp operation.
- The green NEUTRAL lamp, when lit, signals the transmission is in neutral gear.
- The red OIL indicator lamp, when lit, signals that oil is not circulating through the engine.

NOTE:

The OIL indicator lamp will glow when the ignition is turned on prior to starting engine. With engine running, lamp should be off when engine speed is above idle.

Several other circumstances that could cause the red oil indicator lamp to signal, include the following:

- If the oil pressure indicator lamp does not go off at speeds above idling, it is usually because of an empty oil tank or diluted oil.
- In freezing weather the oil feed may clog with ice and sludge, preventing oil circulation.
- A grounded oil signal switch wire.
- A faulty signal switch.
- A damaged or improperly installed check valve.
- Trouble with the pump.

CAUTION

If the oil pressure indicator lamp remains lit, always check the oil supply first. If the oil supply is normal and the lamp is still lit, stop the engine at once and do not ride further until the trouble is located and the necessary repairs are made. Failure to do so may result in engine damage. (00157a)

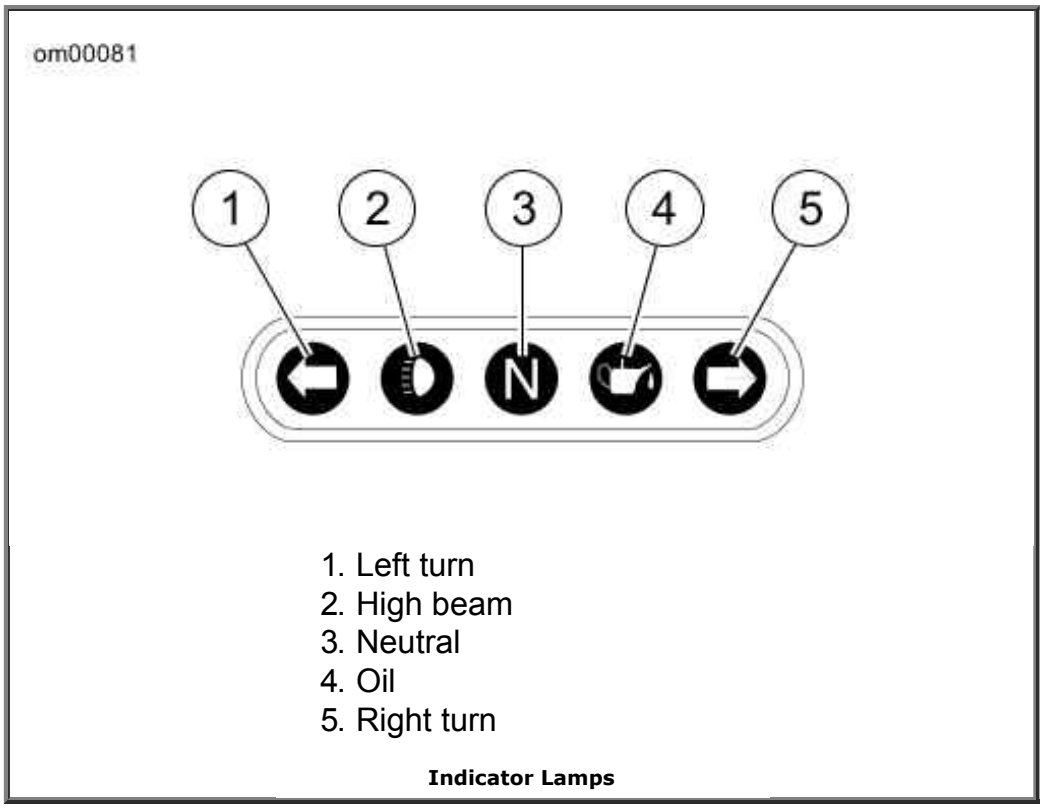

Indicator Lamps

Gear Shift Lever

CAUTION

The clutch must be fully disengaged before attempting a gear shift. Failure to fully disengage the clutch can result in equipment damage. (00182a)

The gear shift lever is located on the left side of the motorcycle and is operated with the left foot. The transmission is a six speed sequential gear box.

1. Push the gear shift lever all the way down (full stroke) to shift the transmission to the next lower gear.

2. Lift the gear shift lever all the way up (full stroke) to shift the transmission to the next higher gear.

   NOTES:
   - *Release the gear shift lever after each gear change.*
   - *The lever must return to its central position before another gear change can be made.*

First gear is the last gear position that can be found by pushing the gear shift lever full stroke downward.

Neutral is located between first and second gear. The green neutral indicator lamp on the dash will illuminate when the transmission is in neutral.

To shift from first gear to neutral, lift the gear shift lever one-half of its full stroke.

When the motorcycle is standing still and the engine is not running, shifting gears requires a different technique. Before shifting in this condition, move the motorcycle backward and forward with the clutch fully disengaged (clutch lever pulled in). While maintaining slight pressure on the shift lever, shift from one gear to another.

Even with the engine running and the motorcycle standing still, difficulty may be experienced in shifting gears. This difficulty occurs because transmission gears are not turning and shifting parts are not lined up to permit engagement.

CAUTION

When difficulty of shifting gears is experienced, do not under any circumstances, attempt to force the shift. The results of such abuse will be a damaged or broken shifter mechanism. (00161a)

See Shifting Gears: Six Speed for more information.

Brake System

⚠WARNING

Do not apply brake strongly enough to lock the wheel. A locked wheel will skid and can cause loss of vehicle control, which could result in death or serious injury. (00053a)

The rear brake pedal controls the rear wheel brake and is located on the motorcycle's right side. Operate the rear brake pedal with the right foot.

The front brake hand lever controls the front wheel brake and is located on the right handlebar. Operate the hand lever with the fingers of the right hand.

⚠WARNING

Do not position fingers between hand control lever and handlebar grip. Improper hand positioning can impair control lever operation and cause loss of vehicle control, which could result in death or serious injury. (00032a)

Brakes should be applied uniformly and evenly to prevent wheels from locking up. A balance between rear and front braking is generally best.

Jiffy Stand

⚠WARNING

Always park motorcycle on a level, firm surface. An unbalanced motorcycle can fall over, which could result in death or serious injury. (00039a)

The jiffy stand is located on the left side of the motorcycle and swings outward to support the motorcycle for parking.

⚠WARNING

The jiffy stand locks when placed in the full forward (down) position with vehicle weight on it. If the jiffy stand is not in the full forward (down) position with vehicle weight on it, the vehicle can fall over which could result in death or serious injury. (00006a)

⚠WARNING

Be sure jiffy stand is fully retracted before riding. If jiffy stand is not fully retracted, it can contact the road surface causing a loss of vehicle control, which could result in death or serious injury. (00007a)

Rear View Mirrors

⚠WARNING

Objects in mirrors are closer than they appear. Use caution when judging distance of objects in mirrors. Failure to judge correct distances could result in death or serious injury. (00033a)

Your vehicle is equipped with two convex rear view mirrors.

This type of mirror is designed to give a much wider view to the rear than a flat mirror. However, cars and other objects seen in this type of mirror will look smaller and farther away than they actually are.

- Use caution when judging the size or relative distance of objects seen in rear view mirrors.
- Always adjust the rear view mirrors to clearly reflect the area behind the motorcycle before riding.

NOTE:

Adjust mirrors so you can see a small portion of your shoulders in each mirror. This will help you establish the relative distance of vehicles to the rear of your motorcycle.

Fuel Filler Cap

See Fuel Filler Cap and Fuel Gauge: FXDFSE2. To open fuel filler cap, turn cap counterclockwise and lift up. To close, turn fuel filler cap clockwise until it clicks. The ratchet action of the cap prevents overtightening.

NOTES:

- *Fuel filler cap turns approximately three-quarter turn before it starts unscrewing.*
- *Fuel filler caps are located on the right side of the fuel tank. The cap on the left side is the fuel gauge and is NOT removable.*

See SAFE OPERATING RULES and review safety procedures.

⚠WARNING

Do not store motorcycle with gasoline in tank within the home or garage where open flames, pilot lights, sparks or electric motors are present. Gasoline is extremely flammable and highly explosive, which could result in death or serious injury. (00003a)

⚠WARNING

Avoid spills. Slowly remove filler cap. Do not fill above bottom of filler neck insert, leaving air space for fuel expansion. Secure filler cap after refueling. Gasoline is extremely flammable and highly explosive, which could result in death or serious injury. (00028a)

⚠WARNING

Do not use aftermarket fuel caps. Aftermarket fuel caps may fit improperly and leak, which could lead to death or serious injury. See a Harley-Davidson dealer for approved fuel caps. (00034a)

CAUTION

Do not spill fuel onto the motorcycle while refueling. Immediately wipe up fuel spills on your motorcycle. Fuel can cause damage to cosmetic surfaces. (00147b)

CAUTION

Use only unleaded fuel in catalytic converter-equipped motorcycles. Using leaded fuel will damage the emission control system. (00150b)

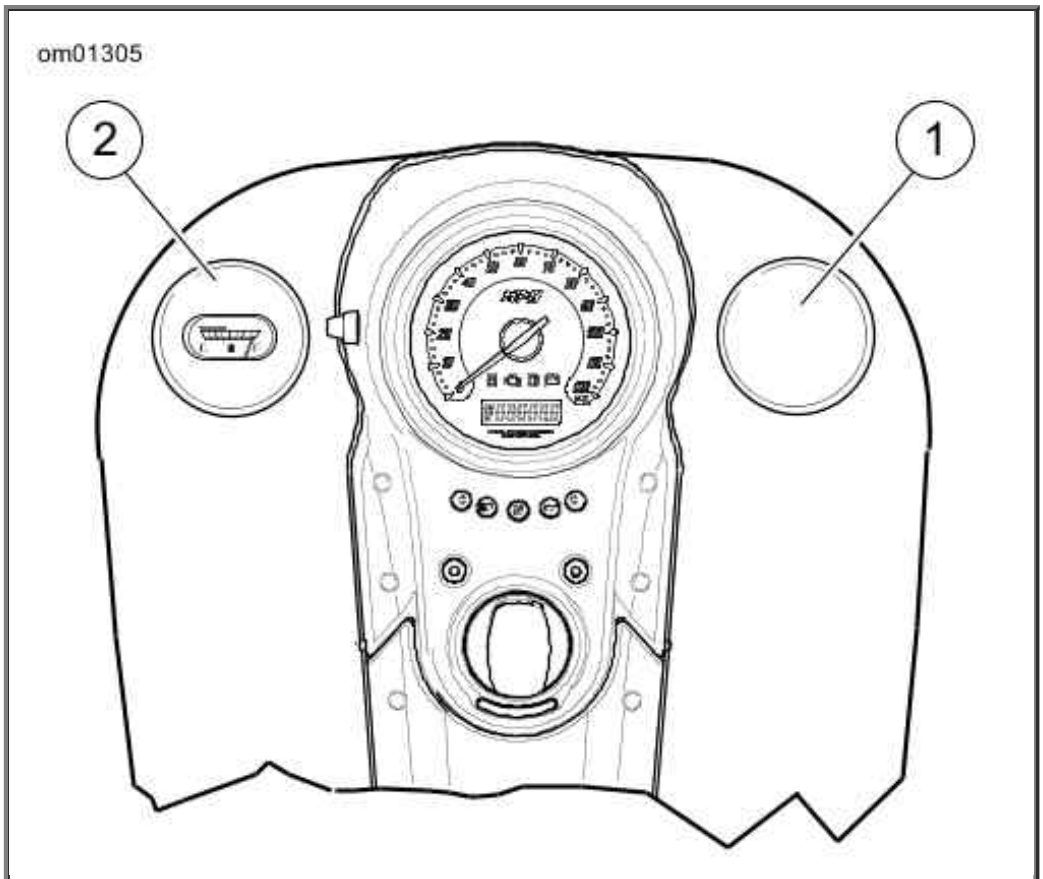

1. Fuel filler cap
2. Fuel gauge

Fuel Filler Cap and Fuel Gauge: FXDFSE2

Shock Absorber Preload Adjustment

The shock absorber spring preload can be adjusted for the weight the motorcycle is to carry. Increase preload to accommodate additional weight of the rider, passenger and cargo. Reduce preload if carrying less weight.

⚠WARNING

Adjust both shock absorbers equally. Improper adjustment can adversely affect stability and handling, which could result in death or serious injury. (00036b)

CAUTION

Do not turn the shock absorber adjustment collar clockwise beyond adjustment setting 5. Doing so may result in equipment damage. (00166b)

1. See Preload Adjustment. Using a SPANNER WRENCH HD-94820-75A , turn the preload adjustment collar counterclockwise (as viewed from the top of the shock) until the collar stops. This is the minimum preload setting (position 1).

   NOTE:

   Some models have a cover over the adjustment collar. Insert teeth on spanner wrench into

holes in the collar cover to adjust.

2. See Shock Absorber Preload Adjustment (Typical). Turn the collar clockwise to the desired preload position.

3. Adjust the other shock absorber to the same preload position.

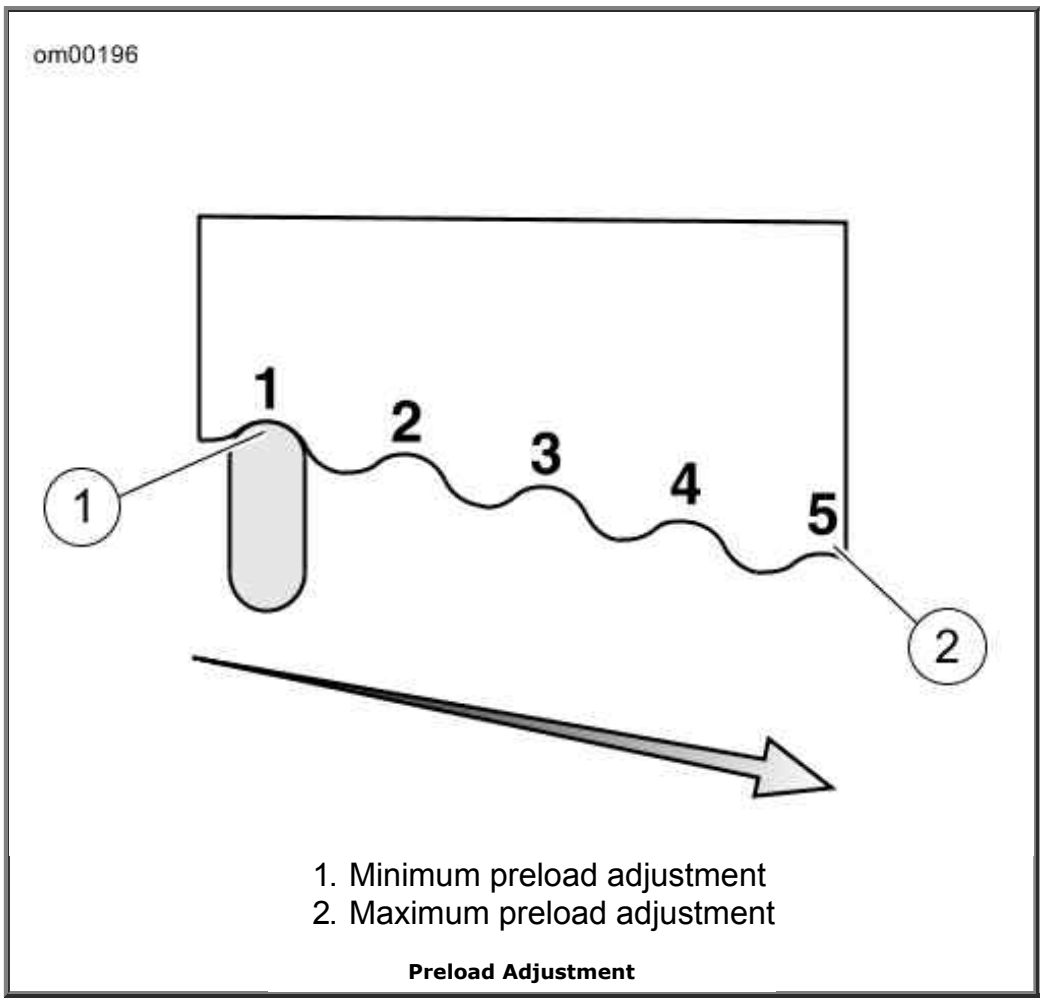

1. Minimum preload adjustment
2. Maximum preload adjustment

Preload Adjustment

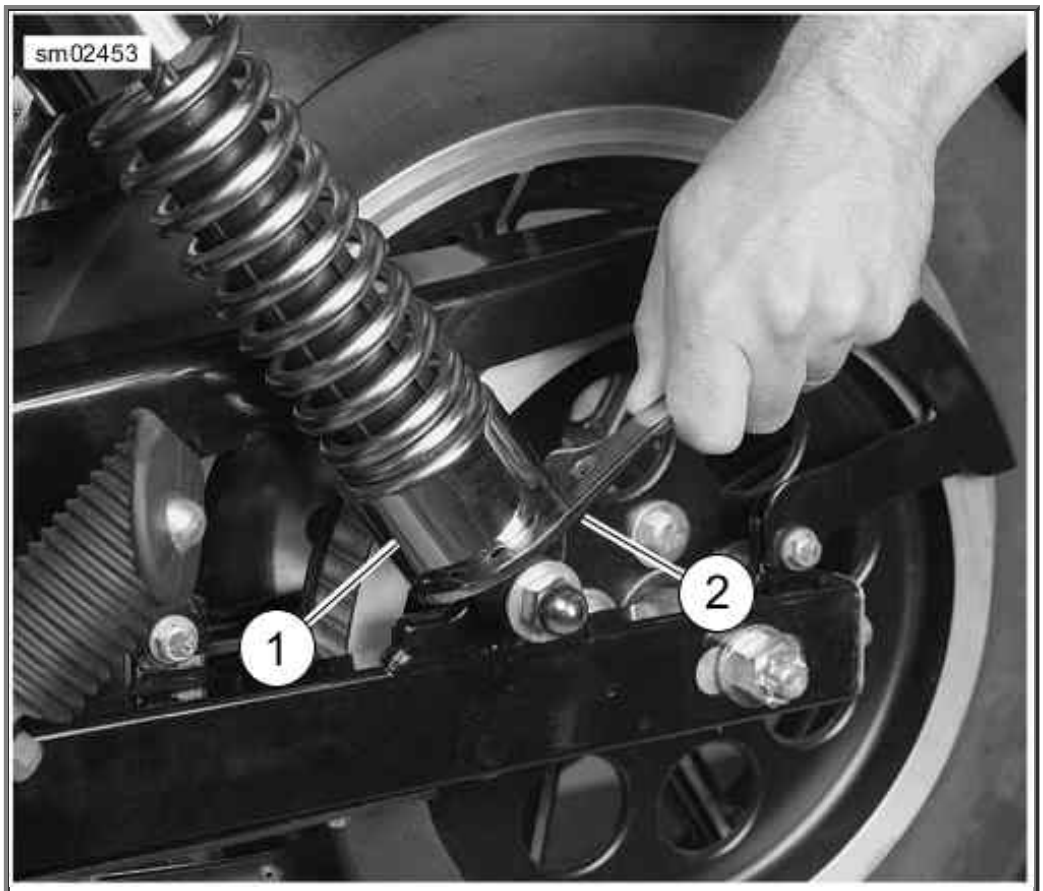

1. Preload adjustment collar cover
2. Spanner wrench

Shock Absorber Preload Adjustment (Typical)

Hands-Free Security Module

Harley-Davidson Smart Security System

Components

See Security Module with Antenna (shown removed). The Harley-Davidson Smart Security System (H-DSSS) consists of a Hands-Free Security Module (HFSM) (1) and a Hands-Free Antenna (2) mounted on the motorcycle, and a Hands-Free Fob **carried** by the rider/passenger.

After parking the motorcycle, turn the ignition key to OFF and the Smart Security System will automatically **arm** within five seconds. While armed, the starter and ignition are disabled and the rider may leave the motorcycle knowing that the module will activate an alarm if someone tampers with the ignition or attempts to move the motorcycle.

If the fob is present, the module will automatically **disarm** when the ignition key is turned to IGNITION or ACCESS.

NOTE:

Do not relocate the module or the antenna on the motorcycle.

Options

Several options are available for the Harley-Davidson Smart Security System from the Harley-Davidson Genuine Motor Accessories and Motor Parts catalog. Options include:

- Smart Siren and Smart Siren II.
- Security Pager and Security Pager Receiver II.
- Replacement Fobs.

See a Harley-Davidson dealer for details.

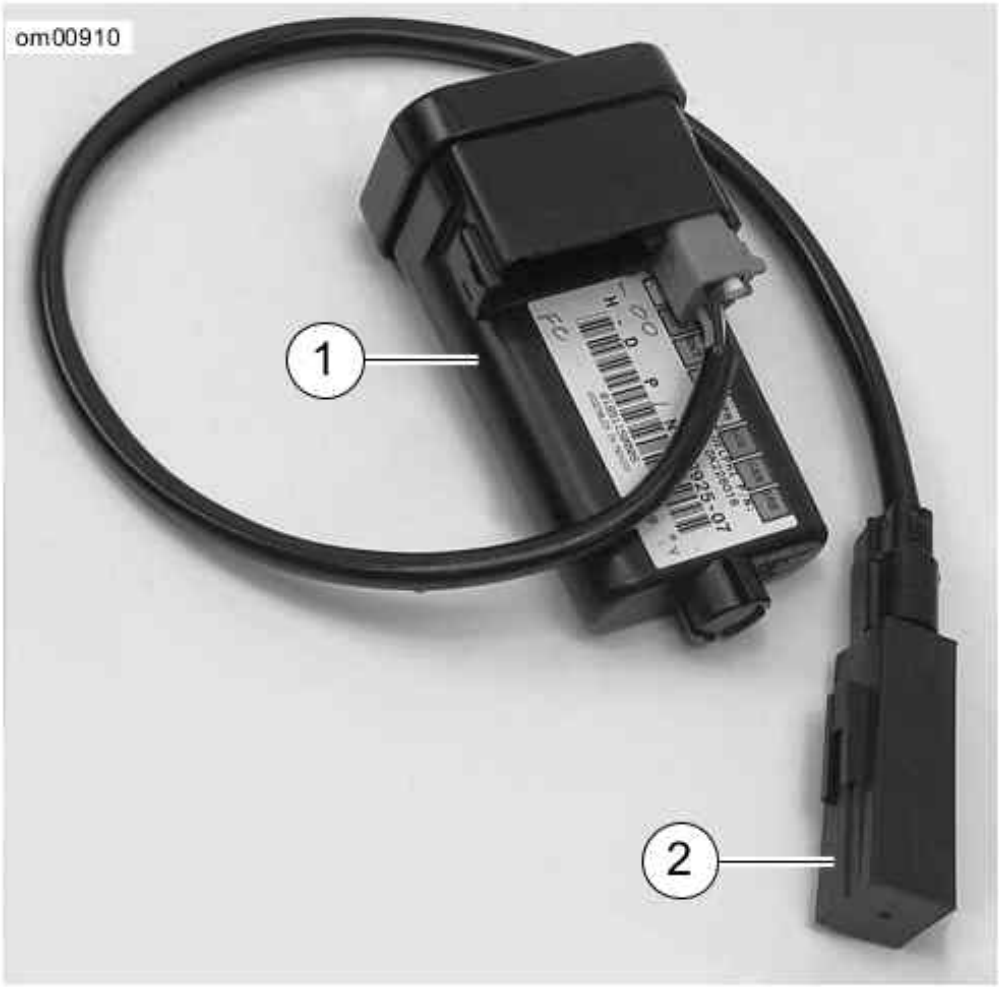

1. Hands-Free Security Module
2. Hands-Free Antenna

Security Module with Antenna (shown removed)

FCC Regulations

FCC ID: L2C0027TR IC ID: 3432A-0027TR

FCC ID: L2C0028TR IC ID: 3432A-0028TR

This device complies with Part 15 of the FCC Rules and with RSS-210 of Industry Canada rules. Operation is subject to the following two conditions:

(1) This device may not cause harmful interference, and (2) This device must accept any interference received, including interference that may cause undesired operation.

NOTE:

Changes or modifications not expressively approved by the party responsible for compliance could void the user's authority to operate the equipment.

The term "IC:" before the radio certification number only signifies that Industry Canada technical specifications were met.

Hands-Free Fob

Fob Assignment

See Hands-Free Fob: Smart Security System. Hands-free fobs are electronically assigned to the Harley-Davidson Smart Security System by a Harley-Davidson dealer so that the module can recognize a fob's unique signal. Only two fobs can be assigned to the module at any one time.

Replacement fobs can be purchased from a dealership but can only be assigned to the motorcycle by a trained Harley-Davidson technician.

NOTES:

- *The reusable label found on the fob packaging lists the serial number of the fob. For reference, affix the label to a blank "NOTES" page in this Owner's Manual.*
- *The serial number of the fob is also found on the inside of the fob. See Fob Battery.*
- *The module will arm only if the fob has been assigned by a Harley-Davidson dealer and a Personal Identification Number (PIN) has been entered in the system. The PIN should be recorded on the Personal Information page in the front of this Owner's Manual and on the removable wallet card.*
- *Should the rider misplace the fob or if the fob fails, the rider can refer to the wallet card and use the PIN to manually disarm the system. Refer to Arming and Disarming and Troubleshooting.*
- *The PIN can easily be changed by the rider at any time. Refer to Personal Identification Number (PIN).*

Hands-Free Fob: Smart Security System

Riding with a Fob

- Always carry the fob when riding, loading, fueling, moving, parking or servicing the motorcycle. Carry the fob in a convenient pocket.
- Do not leave the fob attached to the handlebars or store the fob in a luggage compartment. Unintentionally leaving the fob with the motorcycle when it is parked prevents the system from activating the alarm.
- Do not ride with the fob stored in a metal case or with the fob closer than 3.0 in 76 mm to a cell phone, PDA, display or other electronic device. Any electromagnetic interference may prevent the fob from disarming the system.
- For added security, always lock the fork and remove the ignition key when parked. If the fob is within range and the motorcycle is unlocked, tampering with the motorcycle will not activate the alarm.

Personal Identification Number (PIN)

The Personal Identification Number (PIN) is a number that can be used to disarm the Harley-Davidson Smart Security System in case an assigned fob is misplaced, fails or if the fob and module cannot communicate because of electromagnetic interference.

A PIN is a five-digit number (1-9, no zeros).

Changing the PIN

To maintain security, the rider can change the PIN at any time. Refer to Changing the PIN.

Changing the PIN

STEP NO.	ACTION	WAIT FOR CONFIRMATION	NOTES
1	Select a 5-digit (1 thru 9) PIN and record on the wallet card from Owner's Manual.		
2	With an assigned fob present, turn **IGN** key **IGNITION**-OFF-**IGNITION**-OFF-**IGNITION.**		
3	Press **left** turn signal switch **3 times**.		
4	Press **right** turn signal switch **1 time** and release.	Turn signals will flash 3 times. Current PIN will appear in odometer. The first digit will be flashing.	See Odometer Windows - PIN.
5	Enter first digit (a) of new PIN by pressing **left**turn signal switch **a** times.		
6	Press **right** turn signal switch **1 time** and release.	The new digit (a) will replace the current in odometer window.	
7	Enter second digit (b) of new PIN by pressing **left** turn signal switch **b** times.		
8	Press **right** turn signal switch **1 time** and release.	The new digit (b) will replace the current in odometer window.	
9	Enter third digit (c) of new PIN by pressing **left** turn signal switch **c** times.		
10	Press **right** turn switch **1 time** and release.	The new digit (c) will replace the current in odometer window.	
11	Enter fourth digit (d) of new PIN by pressing **left** turn signal switch **d** times.		
12	Press **right** turn switch **1 time** and release.	The new digit (d) will replace the current in odometer window.	
13	Enter fifth digit (e) of new PIN by pressing **left** turn signal switch **e** times.		
14	Press **right** turn switch **1 time** and release.	The new digit (e) will replace the current in odometer window.	
15	Before the module rearms, turn the ignition key to **OFF**.	The odometer will return to mileage.	Turning the ignition key to **OFF** stores the new PIN in the module.

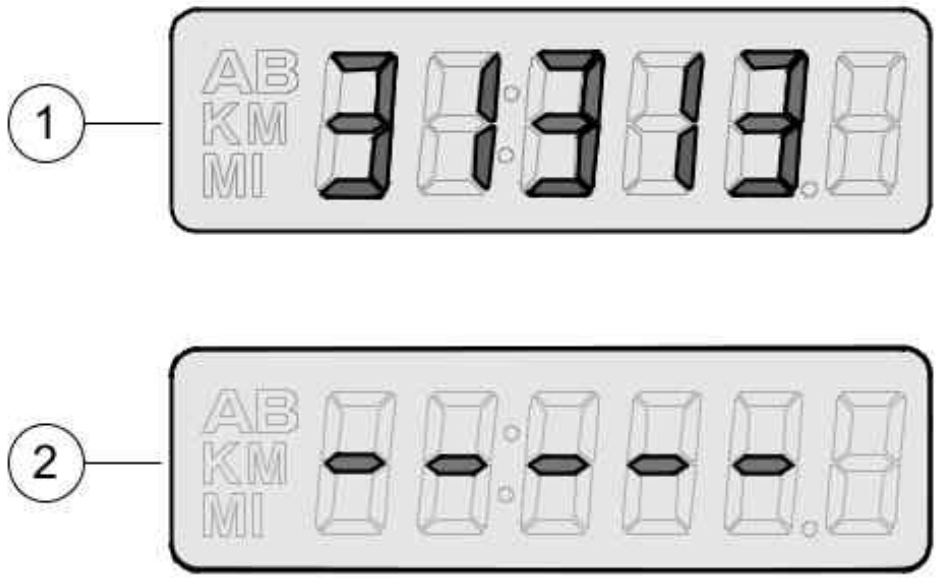

1. Current PIN (example) on PIN Change
2. PIN Disarm

Odometer Windows - PIN

Security Status Indicator

See Speedometer/Odometer and Tachometer. The illuminated key icon in the speedometer face indicates the status of the Harley-Davidson Smart Security System.

- **Armed:** A key icon that blinks approximately every 3 seconds indicates that the system is armed.
- **Disarmed:** After the ignition/headlamp switch is turned to IGNITION and the system disarms, the key icon will remain illuminated for approximately four seconds and then turn off.
- **Service:** A key icon that remains illuminated longer than four seconds indicates that service of the module is required.

Arming and Disarming

Arming

When the motorcycle is parked and the ignition key is turned to OFF, the Harley-Davidson Smart Security System arms automatically within five seconds if no motion is detected. Even when the fob is present, the system will arm.

On arming, the turn signals will flash twice and the siren will chirp twice. While armed, the key icon in the speedometer face will flash every three seconds.

NOTE:

International Models: *The HFSM must be in the Chirp Mode for the siren to chirp on arming or on disarming. See Siren Chirp Mode (Confirmation).*

Disarming

Once disarmed, the rider may ride or move the motorcycle for parking, storage or service without setting off the alarm.

Fob: An armed Smart Security System is automatically disarmed when the ignition key is turned to IGNITION with the fob present.

When the module disarms, the siren will chirp once and the key icon will illuminate for a solid four seconds and then turn off.

NOTE:

Any motion, like lifting the motorcycle up off of its jiffy stand, or turning the ignition key to IGNITION and the module will electronically "poll" for the presence of the fob. If the fob is present, the system disarms.

Personal Identification Number (PIN): If the fob is misplaced or if the present fob fails to communicate with the module, the system can be disarmed with the Personal Identification Number (PIN).

Disarming with a PIN

Do not turn handlebars, straddle seat or lift motorcycle off the jiffy stand. During a PIN disarm, if the Smart Security System detects motorcycle motion the system will activate the alarm.

Entering a PIN to Disarm Harley-Davidson Smart Security System

STEP NO.	ACTION	WAIT FOR CONFIRMATION	NOTES
1	If necessary, verify the current 5-digit PIN.		Should be recorded on wallet card.
2	Turn ignition key to **IGNITION**.		
3	Quickly (within 2 seconds of turning ignition key) hold **both** turn signal switches in until confirmation.	Key icon flashes at fast rate. In the odometer window, a flashing dash will be followed by four more dashes.	See Odometer Windows - PIN. Five dashes will appear in the odometer window.
4	Enter first digit (**a**) in the PIN by pressing **left** turn switch **a times.**	The first digit (**a**) in the odometer will be the first digit in the PIN.	
5	Press **right** turn switch **1 time.**	The first digit is stored and the dash will flash.	Serves as enter key.
6	Enter second digit (**b**) in the PIN by pressing **left** turn switch **b times.**	The second digit (**b**) in the odometer will be the second digit in the PIN.	
7	Press **right** turn switch **1**	The second digit is stored and	Serves as enter key.

	time.	the next dash will flash.	
8	Enter third digit (**c**) in the PIN by pressing **left** turn switch **c times.**	The third digit (**c**) in the odometer will be the third digit in the PIN.	
9	Press **right** turn switch **1 time**.	The third digit is stored and the next dash will flash.	Serves as enter key.
10	Enter fourth digit (**d**) in the PIN by pressing **left** turn switch **d times**.	The fourth digit (**d**) in the odometer will be the fourth digit in the PIN.	
11	Press **right** turn switch **1 time.**	The fourth digit is stored and the next dash will flash.	Serves as enter key.
12	Enter fifth digit (**e**) in the PIN by pressing **left** turn switch **e times.**	The fifth digit (**e**) in the odometer will be the fifth digit in the PIN.	
13	Press **right** turn switch **1 time**.	The fifth digit is stored. The key icon stops blinking.	Smart Security System is disarmed.

NOTES:

- *At any time during a PIN disarm, if the fob is brought within range of the motorcycle, the Smart Security System will disarm when the module receives the coded signal from the fob.*
- *If a mistake is made while entering PIN, wait two minutes before another disarming attempt.*
- *The Smart Security System will remain disarmed until the ignition key is turned to OFF.*

Arming with Hazard Warning 4-Way Flashers On

If it should be necessary to leave a motorcycle parked along side a roadway, the hazard warning four-way flashers can be turned ON and the Smart Security System armed.

1. Turn ignition key to IGNITION.
2. Simultaneously press both left and right turn signal switches to turn the four-way flashers ON.
3. Turn the ignition key to OFF to arm the Smart Security System.

To turn hazard warning flashers OFF, turn the ignition key to IGNITION and simultaneously press the left and right turn signal switches.

Alarm

Warnings

Once armed, if the motorcycle is moved or lifted up off of its jiffy stand or if the ignition key is turned to IGNITION and the fob is not present, the alarm will warn the operator with three alternate flashes of the turn signals and a chirp of the siren.

Within four seconds, if the motorcycle is back on its jiffy stand and no further motion is detected and/or the ignition key is turned to OFF, the module will remain armed without activating the

alarm.

If the motorcycle motion continues or the ignition key is not turned back to OFF, the module will issue a second warning four seconds after the first.

NOTE:

During warnings and alarms, the starter motor and the ignition circuits are disabled.

The Alarm

If the Smart Security System is still detecting motion and/or if the ignition key has not been turned back to OFF after a second warning, the system will activate the alarm.

When activated, the Smart Security System will:

- Alternately flash the four turn signals.
- See Smart Siren. Sound the siren.

Duration: The alarm will stop within 30 seconds and if no motion is detected, the alarm will not restart.

However, if motorcycle motion continues the system will repeat the 30 second alarm and recheck for motion. The alarm will repeat this 30 second alarm cycle for five minutes (10 cycles) or until the alarm is deactivated.

NOTE:

The alarm will also activate the LED, vibration or audible modes of a Harley-Davidson Security Pager. A pager can operate either in silent or in combination with the Smart Siren. The range of a pager can be up to 0.5 mile 0.8 km . See a Harley-Davidson dealer for details.

Smart Siren

Deactivate the Alarm

Key Fob: Bring the fob to the motorcycle. After the module identifies that the fob is present, the system will terminate the alarm.

Siren Chirp Mode (Confirmation)

Chirpless Mode

In the chirpless mode, the siren does not chirp on arming or disarming.

NOTE:

Even when armed in the chirpless mode, the siren still chirps warnings on movement and will activate the alarm through cycles.

Chirp Mode

On arming in the chirp mode, the siren responds with two chirps. When disarming, the siren responds with a single chirp.

Switching Modes

Cycling quickly through two armings and disarmings will switch the system from either the chirpless mode or the chirp mode to its opposite.

1. With the fob present, the ignition switch to ON and the system disarmed, turn the ignition switch OFF.
2. When the system arms (two flashes of turn signals), immediately turn the ignition switch to ON.
3. Wait until the security lamp goes out, then immediately turn the ignition switch OFF.
4. When the system arms (two flashes of turn signals), immediately turn the ignition switch to ON and wait for system to disarm.

Transport Mode

It is possible to arm the security system without enabling the motion detector for one ignition cycle. This allows the vehicle to be picked up and moved in an armed state, however, any attempt to start the engine when the key fob is not within range will trigger the alarm.

To Enter Transport Mode

1. Turn the ignition switch to IGNITION.
2. Set the engine stop switch to OFF.
3. With an assigned fob within range, turn the ignition switch from IGNITION to ACC.
4. Simultaneously press both the left and the right turn signal switches. This must be done

within five seconds of turning the ignition switch to ACC.

5. After the turn signals flash once, turn the ignition switch to OFF and the module is armed.
6. Confirmation: Turn signal blinks three times when armed for one ignition cycle.

To Exit Transport Mode

Return the system to normal operation:

With the fob present, turn the ignition switch to IGNITION to disarm the HFSM. To cancel the transport mode, set the engine stop switch to RUN.

Storage and Service Departments

Long-Term Parking

To maintain arming, store the fob beyond the range of the module. If the motorcycle is to be moved while parked, have the fob present.

If the motorcycle will not be operated for several months, such as during the winter season, refer to Motorcycle Storage.

Service Departments

When the motorcycle is to be left at a Harley-Davidson dealer, there are two options:

1. Leave an assigned fob with the dealer.
2. To maintain possession of the fob, ask the dealer to disable the module for service (service mode) before leaving the dealership.

Fob Battery

Replacing the Battery

Replace the key fob battery every year.

1. See Hands-Free Fob Battery. Slowly turn a thin blade in the thumbnail slot (1) on the side of the fob to separate the two halves.
2. Remove the battery (2) and discard.

   NOTE:

   Dispose of the old battery in accordance with local regulations.

3. Install a **new** battery (Panasonic 2032 or equivalent) with the positive (+) side down.
4. Align the two halves of the fob and snap together.

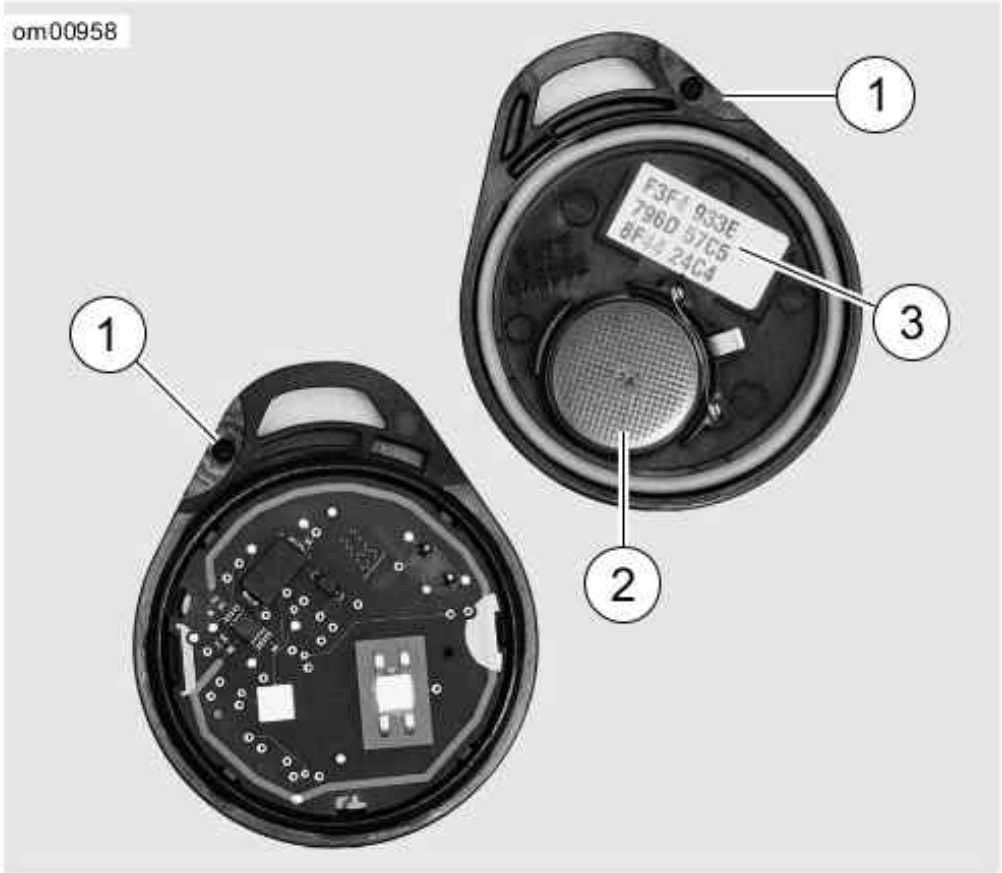

1. Thumbnail slot
2. Battery
3. Fob serial number

Hands-Free Fob Battery

Power Disconnects

Siren

On a power disconnect, to prevent the module from actuating the siren:

1. Verify that the fob is present.
2. Turn the ignition key to IGNITION.
3. Pull the main fuse from its holder or disconnect the battery.

Troubleshooting

Key Icon

If the system key icon stays illuminated while riding, see a Harley-Davidson dealer.

Fob

If the Smart Security System continues to actuate warnings and alarms with the fob present, one

of the following can be the cause:

1. **Electromagnetic Interference:** Other electronic devices, power lines, or other electromagnetic sources can cause the Smart Security System to operate inconsistently.

    a. Verify that the fob is not in a metal enclosure or within 3.0 in. 76 mm of any other electronic devices.

    b. Place the fob on the seat and turn the ignition key to IGNITION. After the module disarms, return the fob to a convenient location.

    c. Move motorcycle at least 15 feet 5 m from the spot of interference.

2. **Discharged Fob Battery:** Use the PIN to disarm the module. Replace the battery. Refer to Fob Battery.

3. **A Damaged Fob:** Use the PIN to disarm the motorcycle. Replacement fobs are available for purchase from a Harley-Davidson dealer.

Siren

- If the siren does not chirp two or three times on a valid arming command from the security module, the siren is either in the Chirpless Mode, not connected, not working, or the siren wiring was opened or shorted while the siren was disarmed.
- If the siren is armed and the internal siren battery is dead, shorted, disconnected, or has been charging for a period longer than 24 hours, the siren will respond with three chirps on arming instead of two.
- The internal siren battery may not charge if the vehicle's battery is less than 12.5 volts.
- If the siren enters the self-driven mode where it is powered from the siren's internal 9 volt battery, the turn signal lamps may or may not alternately flash. If the security module activates the siren, the turn signal lamps will alternately flash. If the siren has been armed and a security event occurs, and the siren is in self-driven mode, the siren will alarm for 20 to 30 seconds and then turn off for 5 to 10 seconds. This alarm cycle will be repeated ten times if the siren is in the self-driven mode.

Operation

Operating Recommendations

⚠WARNING

Motorcycles are different from other vehicles. They operate, steer, handle and brake differently. Unskilled or improper use could result in loss of control, death or serious injury. (00556c)

- Take a rider training course.
- Read Owner's Manual before riding, adding accessories or servicing.
- Wear a helmet, eye protection and protective clothing.
- Never tow a trailer.

CAUTION

Do not run the engine at extremely high RPM with clutch disengaged or transmission in neutral. Running an engine at high RPM can result in engine damage. (00177a)

CAUTION

Do not exceed the maximum safe RPM specified below under any conditions. Exceeding the maximum safe engine RPM can result in equipment damage. (00248a)

- The maximum recommended safe engine speed is 5500 RPM.
- Do not idle engine unnecessarily for more than a few minutes with motorcycle standing still.

CAUTION

Air-cooled engines require air movement over the cylinders and heads to maintain proper operating temperature. Extended periods of idling or parade duty can overheat the engine, resulting in serious engine damage. (00178a)

An engine running long distances at high speed must be given closer than ordinary attention to avoid overheating and possible engine damage.

This applies particularly to a motorcycle equipped with windshield and fairing.

NOTE:

Have the engine checked regularly and keep it well tuned.

⚠WARNING

When riding on wet roads, brake efficiency and traction are greatly reduced. Failure to use care when braking, accelerating or turning on wet roads can cause loss of control, which could result in death or serious injury. (00041a)

NOTE:

When descending upon a long, steep grade, downshift and use engine compression together with intermittent application of both brakes to slow the motorcycle.

⚠WARNING

Continuous use of brake causes overheating and reduced efficiency, which could result in death or serious injury. (00042a)

⚠WARNING

Do not tow a disabled motorcycle. Towing can adversely affect stability and handling, which could result in death or serious injury. (00017a)

Break-in Riding Rules

The First 500 Miles (800 Kilometers)

The sound design, quality materials, and workmanship that are built into your new Harley-Davidson will give you optimum performance right from the start.

To allow your engine to wear-in its critical parts, we recommend that you observe the riding rules provided below for the first 500 miles 800 kilometers .

1. During the first 50 miles 80 kilometers of riding, keep the engine speed below 3000 RPM in any gear. Do not lug the engine by running or accelerating at very low RPM, or by running at high RPM longer than needed for shifting or passing.

   NOTE:

   For models without a tachometer, operate the motorcycle according to the speeds given in Upshift (Acceleration) Gear Speeds: Six Speed and Downshift (Deceleration) Gear Speeds: Six Speed during motorcycle break-in.

2. Up to 500 miles 800 kilometers , vary the engine speed and avoid operating at any steady engine speed for long periods. Engine speed up to 3500 RPM in any gear is permissible.

3. Drive slowly and avoid fast starts at wide open throttle until the engine has warmed up.

4. Avoid lugging the engine by not running the engine at very low speeds in higher gears.

5. Avoid hard braking. Break-in new brakes with moderate use for the first 200 miles 300 kilometers .

Pre-Riding Checklist

⚠WARNING

Read the CONTROLS AND INDICATORS section before riding your motorcycle. Failure to understand the operation of the motorcycle could result in death or serious injury. (00043a)

Before riding your motorcycle at any time, make a general inspection to be sure it is in safe riding condition.

⚠WARNING

Stop the engine when refueling or servicing the fuel

system. Do not smoke or allow open flame or sparks near gasoline. Gasoline is extremely flammable and highly explosive, which could result in death or serious injury. (00002a)

⚠WARNING

Avoid spills. Slowly remove filler cap. Do not fill above bottom of filler neck insert, leaving air space for fuel expansion. Secure filler cap after refueling. Gasoline is extremely flammable and highly explosive, which could result in death or serious injury. (00028a)

⚠WARNING

Use care when refueling. Pressurized air in fuel tank can force gasoline to escape through filler tube. Gasoline is extremely flammable and highly explosive, which could result in death or serious injury. (00029a)

1. Verify fuel is present in tank and add fuel if required.
2. Adjust mirrors to proper riding positions.
3. Check the oil level. Add oil if necessary.
4. Check controls to make sure they operate properly. Operate the front and rear brakes, throttle, clutch and shifter. All controls should operate freely without binding.
5. Check steering for proper operation by turning the handlebars through the full operating range. Handlebars should turn smoothly without binding.

⚠WARNING

Be sure tires are properly inflated, balanced and have adequate tread. Inspect your tires regularly and see a Harley-Davidson dealer for replacements. Riding with excessively worn, unbalanced or under-inflated tires can adversely affect stability and handling, which could result in death or serious injury. (00014a)

6. Check tire condition and pressure. Incorrect pressure will result in poor riding characteristics and can affect handling and stability. Refer to tire specifications for correct inflation pressure to use.

⚠WARNING

Be sure headlamp, tail and stop lamp and turn signals are operating properly before riding. Poor visibility of rider to other motorists can result in death or serious injury. (00478b)

7. Check all electrical equipment and switches including the headlamp, stop lamp, turn signals and horn for proper operation.
8. Check for any fuel, oil or hydraulic fluid leaks.
9. Check drive belt for wear or damage.
10. Service your motorcycle as necessary.

Jiffy Stand Interlock: International Models

Some international models are equipped with a jiffy stand interlock feature.

The vehicle will start and run with the jiffy stand down while the transmission is in neutral. If the jiffy stand is down, the transmission is in gear, and the clutch is released, the vehicle will stall. The message "SidE StAnd" will scroll across the odometer to indicate this to the rider. Raising the jiffy stand (or putting the transmission in neutral) will permit the engine to run and clear the message.

If the jiffy stand falls out of the fully retracted position while riding at speeds greater than 10 mph 15 km/h , then the jiffy stand interlock system will maintain engine operation and alert the rider about this by illuminating the indicators (flash twice) and scroll the message "SidE StAnd" across the odometer. The message will remain until the system detects the jiffy stand in the fully retracted position again. The rider may continue to operate the vehicle while in this mode.

The rider may clear the text messages at any time by pressing the function switch once while the vehicle is powered up.

Starting the Engine

General

CAUTION

The engine should be allowed to run slowly for 15-30 seconds. This will allow the engine to warm up and let oil reach all surfaces needing lubrication. Failure to comply can result in engine damage. (00563b)

The engine is equipped with Electronic Sequential Port Fuel Injection (ESPFI). The amount of fuel delivered to the engine is electronically control by the Engine Control Module (ECM). Do not roll the throttle before starting. Rolling the throttle before starting the motorcycle is unnecessary.

Starting

⚠WARNING

Shift transmission to neutral before starting engine to prevent accidental movement, which could result in death or serious injury. (00044a)

1. Turn ignition/headlamp key switch to IGNITION position. Do not roll the throttle.

   NOTE:

   The engine lamp will light for approximately 4 seconds and you will hear the fuel pump purr for approximately 2 seconds as it operates to fill the fuel lines with gasoline.

2. See Right Handlebar Controls. Turn the OFF/RUN switch to RUN position.

3. Squeeze the clutch lever in against the hand grip.

   NOTE:

   To activate the starting system, the clutch interlock circuitry requires the clutch be disengaged, clutch lever pulled in against left handgrip, and/or the transmission be shifted to the neutral position (green neutral lamp lit).

4. Raise the sidestand (required for international models).

5. Press the starter button to start the motorcycle.

6. When the engine has started, you can operate your motorcycle as you normally would after raising the jiffy stand.

NOTE:

If the fuel tank becomes completely dry, it may take a few seconds longer to start the motorcycle after filling the tank. It is not necessary to take any extra measure before starting the motorcycle.

Automatic Compression Release (ACR)

This vehicle is equipped with Automatic Compression Releases (ACRs). During starting, a small auxiliary valve in each cylinder head is opened automatically by the ECM. The open valve releases the air compressed in the cylinder heads and allows the starter motor to turn the high compression engine over at a faster rate to aid starting.

After starting and during normal operation, the ACR valves remain closed.

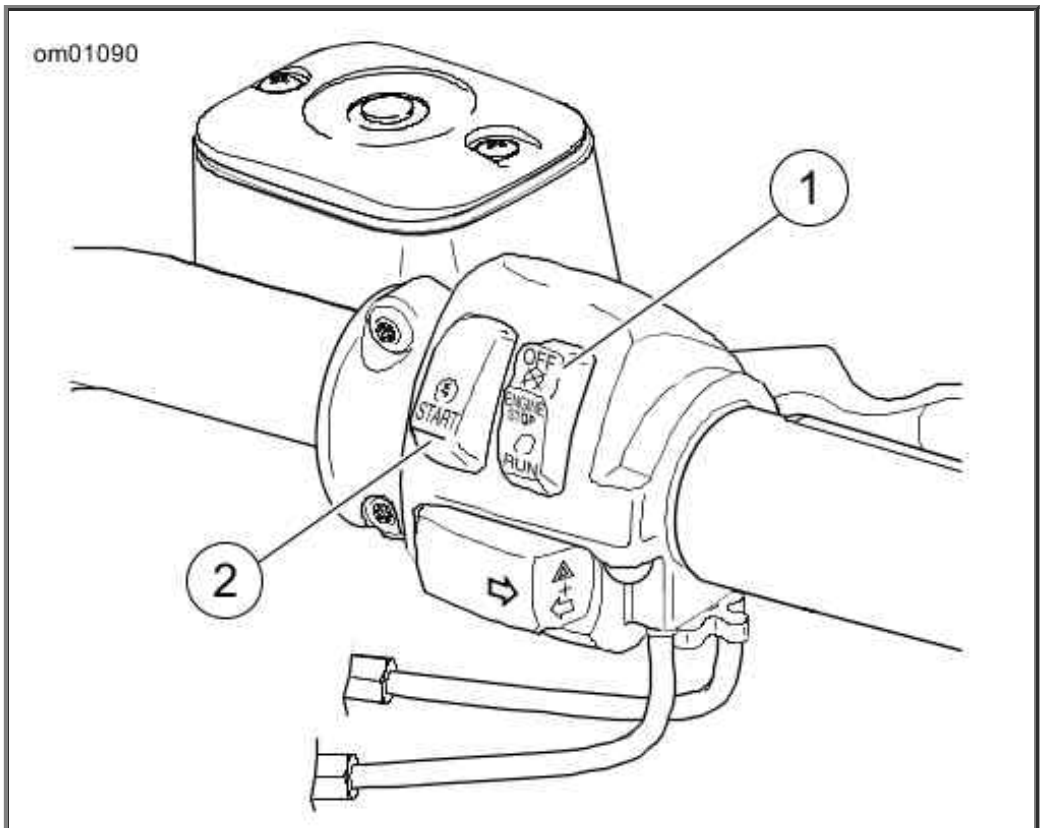

1. Engine off/run switch
2. Engine start switch

Right Handlebar Controls

Engine Idle Temperature Management System

For those riders who frequently find themselves in riding conditions where the vehicle is subjected to prolonged idle conditions or traffic congestion, the motorcycle is equipped with an Engine Idle Temperature Management System (EITMS) to provide limited cooling of the rear cylinder.

When engine temperature reaches a pre-determined point, the EITMS will turn off the rear cylinder fuel injector. Idle speed will be maintained, however the rear cylinder will become an "air pump" which will work to cool the engine.

EITMS will activate (rear cylinder will turn off) when **all** of the following conditions are met:

- Engine temperature is greater than 287°F domestic 165°C international
- Twist grip opening is at idle
- Vehicle speed under 1 mph 2 km/h
- Engine speed under 1200 RPM

EITMS will disable (rear cylinder will again fire) if **any one** of the following occurs:

- Engine temperature falls below 275°F domestic 135°C international
- Twist grip opening is greater than idle
- Vehicle speed exceeds 2 mph 3 km/h
- Engine speed exceeds 1350 RPM
- Clutch is released with vehicle in gear

When the engine is in EITMS operation, you may notice a difference in idle cadence. Additionally, there may be a unique exhaust odor. These are both considered to be normal conditions.

An optional calibration without EITMS enabled is available. See a Harley-Davidson dealer if you wish to have this calibration installed.

Stopping the Engine

1. Stop the engine by turning the engine stop switch on right handlebar to OFF.
2. Turn the ignition/headlamp key switch to OFF. If the engine should be stalled or stopped in any way, turn off the ignition/headlamp key switch at once to prevent battery discharge.

Shifting Gears: Six Speed

Getting Started

CAUTION

The clutch must be fully disengaged before attempting a gear shift. Failure to fully disengage the clutch can result in equipment damage. (00182a)

NOTE:

Always start engine with transmission in neutral. Always start motorcycle forward motion from first gear.

1. With motorcycle engine running and jiffy stand retracted, pull the clutch hand lever in against handlebar grip to fully disengage clutch.
2. Push the foot shift lever down to end of its travel and release. The transmission is now in first gear.
3. To start forward motion, release the clutch lever slowly to engage the clutch and at the same time, open throttle gradually.

Upshift (Acceleration)

Refer to Upshift (Acceleration) Gear Speeds: Six Speed. Gear shift pattern is first gear down, next five gears up. Engage second gear after the motorcycle has reached at the appropriate shifting speed.

1. Close the throttle.
2. Disengage the clutch (pull clutch lever in).
3. See Upshift Pattern: Six Speed. Lift the gear shift lever up to the end of its travel and release.
4. Engage the clutch (release clutch lever) and gradually open the throttle.
5. Repeat the previous steps to engage third, fourth, fifth, and sixth gears.

NOTES:

- *Disengage the clutch completely before each gear change.*
- *Partially close the throttle so the engine will not drag when clutch is again engaged (clutch lever released).*

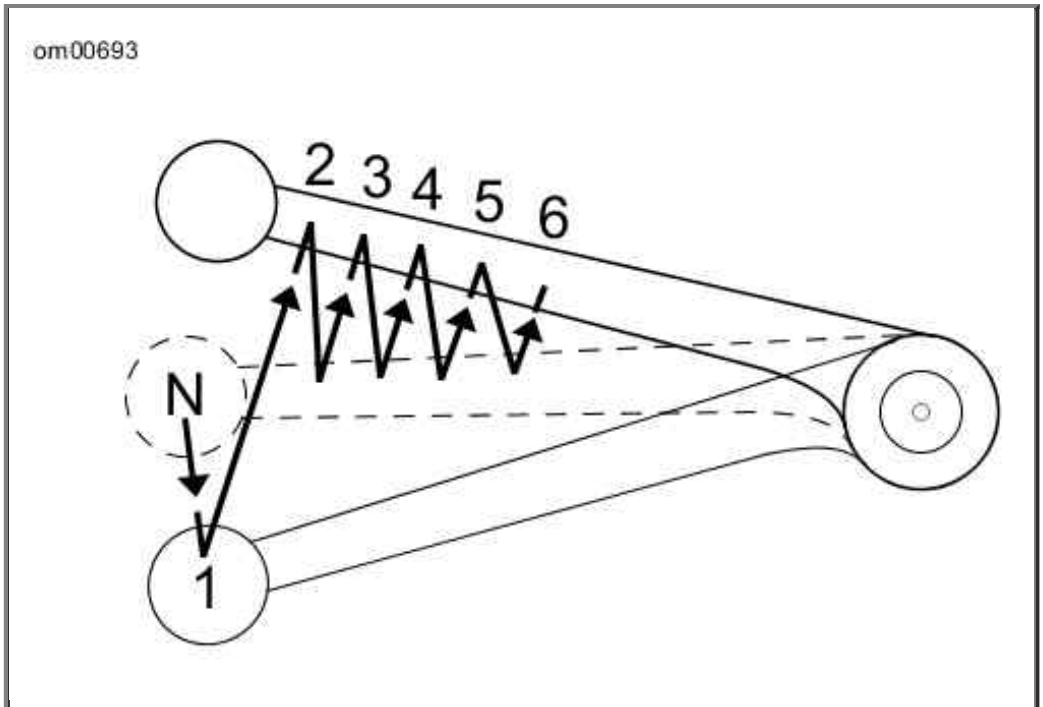

Upshift Pattern: Six Speed

Upshift (Acceleration) Gear Speeds: Six Speed

GEAR CHANGE	MPH	KPH
First to second	15	25
Second to third	25	40
Third to fourth	35	55
Fourth to fifth	45	70
Fifth to sixth	55	85

Downshift (Deceleration)

⚠WARNING

Do not downshift at speeds higher than those listed. Shifting to lower gears when speed is too high can cause the rear wheel to lose traction and lead to loss of vehicle control, which could result in death or serious injury. (00045b)

See Downshift Pattern: Six Speed. Gear shift pattern is first gear down; next five gears up. Refer to Downshift (Deceleration) Gear Speeds: Six Speed for shifting speeds.

NOTE:

The shifting speeds shown in the tables constitute a recommendation. Vehicle owners may determine that individual shifting habits may differ from those stated and remain appropriate for

individual riding styles.

See Downshift Pattern: Six Speed. When engine speed decreases, as in climbing a hill or running at a reduced speed, shift to the next lower gear while partially closing the throttle so the engine accelerates as soon as the clutch lever is released.

NOTES:

- *Disengage the clutch completely before each gear change.*
- *Partially close the throttle so the engine will not drag when clutch is again engaged (clutch lever released).*

CAUTION

Shift to neutral before stopping engine. Shifting mechanism can be damaged by shifting gears while engine is stopped. (00183a)

The gear shifter mechanism permits shifting the transmission to neutral from first gear.

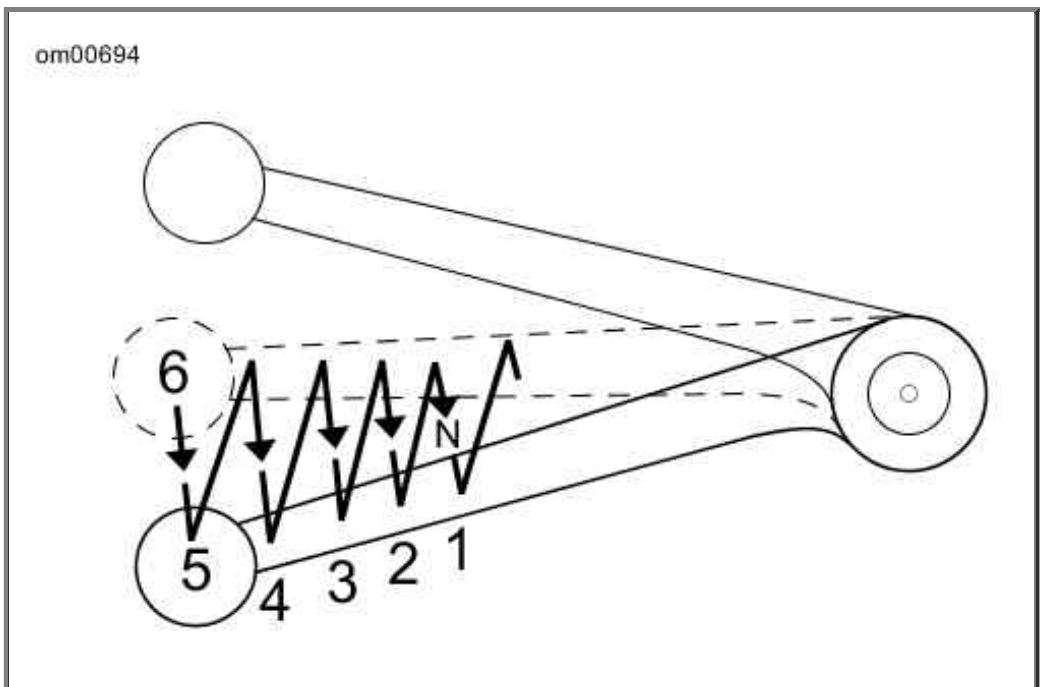

Downshift Pattern: Six Speed

Downshift (Deceleration) Gear Speeds: Six Speed

GEAR CHANGE	MPH	KPH
Sixth to fifth	50	80
Fifth to fourth	40	65
Fourth to third	30	50
Third to second	20	30
Second to first	10	15

Maintenance and Lubrication

Safe Operating Maintenance

⚠WARNING

Perform the service and maintenance operations as indicated in the regular service interval table. Lack of regular maintenance at the recommended intervals can affect the safe operation of your motorcycle, which could result in death or serious injury. (00010a)

⚠WARNING

If you operate your motorcycle under adverse conditions (severe cold, extreme heat, very dusty environment, very bad roads, through standing water, etc.), you should perform the regular maintenance intervals more frequently to ensure the safe operation of your motorcycle. Failure to maintain your motorcycle could result in death or serious injury. (00094a)

Good maintenance creates a safe motorcycle. A careful check of certain equipment must be made after periods of storage. Also, frequently inspect the motorcycle between the regular service intervals to determine if additional maintenance is necessary.

Check the following items:

1. Tires for correct pressure, abrasions or cuts.
2. Drive belt for proper tension, wear or damage.
3. Brakes, steering and throttle for responsiveness and freedom from binding.
4. Brake fluid level and condition. Hydraulic lines and fittings for leaks. Also, check brake pads and discs for wear.
5. Cables for fraying or crimping and free operation.
6. Engine oil and primary chaincase/transmission fluid levels.
7. Headlamp, tail lamp, brake lamp and turn signals for proper operation.

Break-in Maintenance

NOTE:

The performance of new motorcycle initial service is required to keep your new motorcycle warranty in force and for proper emissions system operation.

Refer to Regular Service Intervals: 2010 FXDFSE2 Models. After a new motorcycle has been ridden its first 1000 miles 1600 kilometers , it should be taken to an authorized Harley-Davidson dealer for initial service operations.

Engine Lubrication: Synthetic Oil

Engine oil is a major factor in the performance and service life of the engine. Always use the proper grade of oil for the lowest temperature expected before the next scheduled oil change. Your authorized dealer has the proper oil to suit your requirements.

Your motorcycle comes equipped with Screamin' Eagle® SYN3 Synthetic Motorcycle Lubricant. If SYN3 is not available and addition of motor oil is required, the first choice would be to add H-D 360 SAE 20W50 to the SYN3 for engine lubrication. Although H-D 360 is compatible with SYN3, we suggest the mixture of the fluids be changed as soon as possible.

If H-D 360 is not available, the second choice would be to add an acceptable diesel engine oil. We again suggest the mixture of the fluids be changed as soon as possible. DO NOT add diesel engine oil to the primary chaincase or transmission.

To switch lubricant to H-D 360, completely drain the SYN3 before filling with H-D 360. A residual amount of fluid will remain. It is not required to flush out the residual fluid.

CAUTION

Do not switch lubricant brands indiscriminately because some lubricants interact chemically when mixed. Use of inferior lubricants can damage the engine. (00184a)

Refer to Recommended Synthetic Engine Oils. If it is necessary to add oil and Screamin' Eagle SYN3 Synthetic Motorcycle Lubricant is not available, use an oil certified for diesel engines. Acceptable diesel engine oil designations include: CF-4, CG-4, CH-4 and CI-4.

The preferred viscosities for the diesel engine oils in descending order are: 20W50, 15W40 and 10W40.

At the first opportunity, see an authorized dealer to change back to 100 percent Harley-Davidson oil.

Recommended Synthetic Engine Oils

H-D TYPE	VISCOSITY	H-D RATING	LOWEST AMBIENT TEMPERATURE	COLD WEATHER STARTS BELOW 50° F (10° C)
Screamin' Eagle SYN3 Synthetic Motorcycle Lubricant	SAE 20W50	HD 360	Above 40° F 4° C	Excellent
H-D Multi-grade	SAE 10W40	HD 360	Below 40° F 4° C	Excellent
H-D Multi-grade	SAE 20W50	HD 360	Above 40° F 4° C	Good
H-D Regular Heavy	SAE 50	HD 360	Above 60° F 16° C	Poor
H-D Extra Heavy	SAE 60	HD 360	Above 80° F 27° C	Poor

CAUTION

Oil level cannot be accurately measured on a cold engine. For pre-ride inspection, with motorcycle leaning on jiffy stand on level ground, oil should register on dipstick between arrows when engine is cold. Do not add oil to bring the level to the FULL mark on a COLD engine. (00185a)

See Engine Oil Dipstick Location: FXDFSE2. Dipstick is located on lower right side of engine.

Oil Level Cold Check

Perform engine oil level **COLD CHECK** as follows:

1. See Engine Oil Dipstick Location: FXDFSE2. For pre-ride inspection with the vehicle resting on the jiffy stand on level ground, remove engine oil filler cap. Wipe off the dipstick and insert it back into the oil pan and tighten cap securely.

2. See Engine Oil Level: Dyna Models. Remove the dipstick and note the level of the oil. Oil level should register between the two marks on the dipstick. If oil level is at or below the lower arrow, add only enough oil to bring the level in the middle of the two marks (1) on the dipstick.

   NOTES:

   Clean oil from dipstick threads. If oil is present on threads, it can weep past the dipstick O-ring. This condition may be incorrectly diagnosed as an oil leak.

   See Engine Oil Level: Dyna Models. For cold check level, do not exceed mid-point on dipstick when filling with oil.

3. Replace filler cap and tighten securely.

Oil Level Hot Check

Perform engine oil level **HOT CHECK** as follows:

1. Ride motorcycle until engine is at normal operating temperature.

2. With the vehicle resting on the jiffy stand on level ground, allow engine to idle for 1-2 minutes. Turn engine off.

3. Remove and wipe off the dipstick. Insert and tighten cap securely.

4. Refer to Recommended Synthetic Engine Oils. Remove the dipstick and note the level of the oil. Add only enough oil to bring the level to the FULL mark on the dipstick. Do not overfill. Use only recommended oil specified in Engine Lubrication: Synthetic Oil.

5. Replace filler cap and screw in securely.

NOTE:

The engine will require a longer warm up period in colder weather.

CAUTION

Do not allow hot oil level to fall below Add/Fill mark on dipstick. Doing so can result in equipment damage and/or equipment malfunction. (00189a)

CAUTION

Do not overfill oil tank. Doing so can result in oil carryover to the air cleaner leading to equipment damage and/or equipment malfunction. (00190a)

- Check engine oil supply at each complete fuel refill.
- Refer to Regular Service Intervals: 2010 FXDFSE2 Models for recommended oil change intervals.

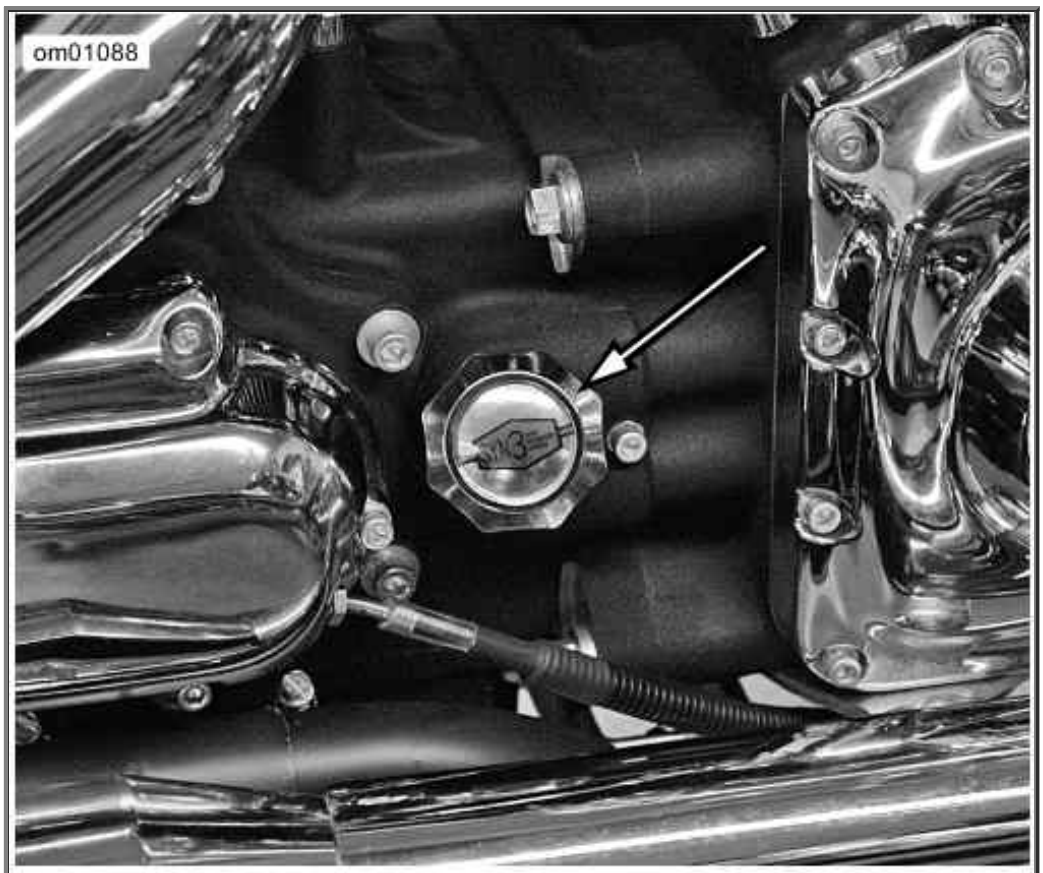

Engine Oil Dipstick Location: FXDFSE2

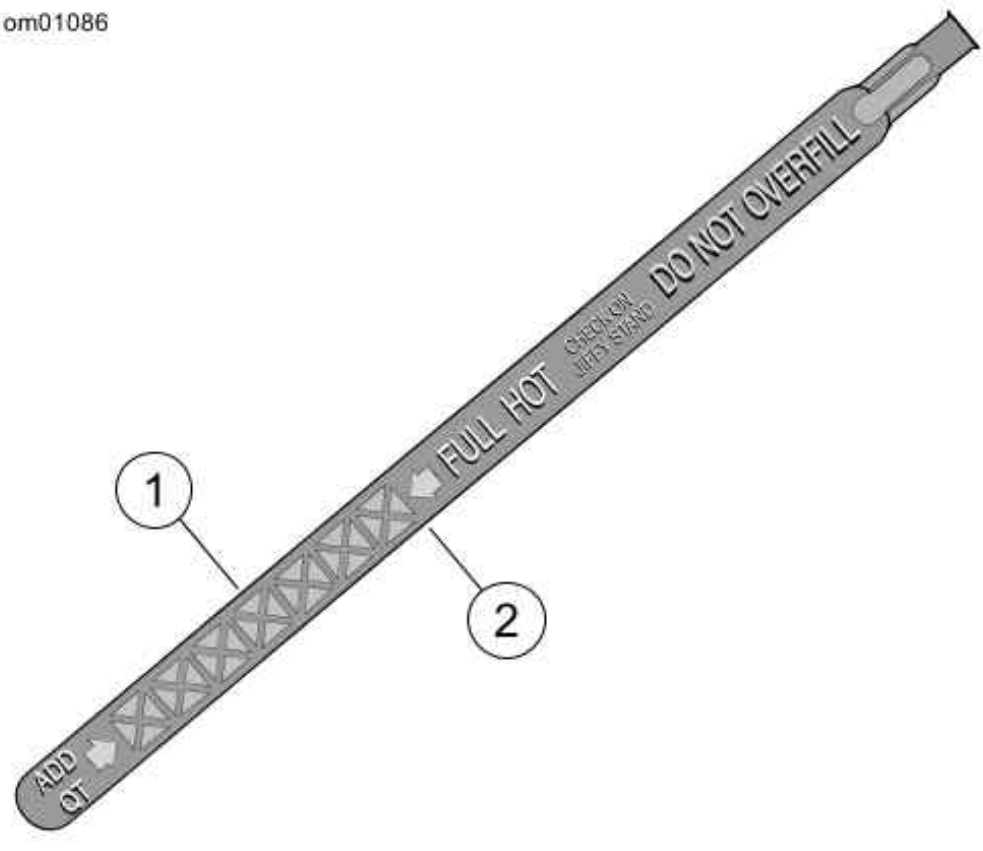

1. Cold check level
2. Hot check level (FULL)

Engine Oil Level: Dyna Models

Changing Oil and Oil Filter

CAUTION

Do not switch lubricant brands indiscriminately because some lubricants interact chemically when mixed. Use of inferior lubricants can damage the engine. (00184a)

⚠WARNING

Be sure that no lubricants or fluids get on tires, wheels or brakes when changing fluid. Traction can be adversely affected, which could result in loss of control of the motorcycle and death or serious injury. (00047d)

Twin Cam 110™ equipped vehicles require the premium oil filter (Part No. 63798-99A Chrome or Part No. 63731-99A Black).

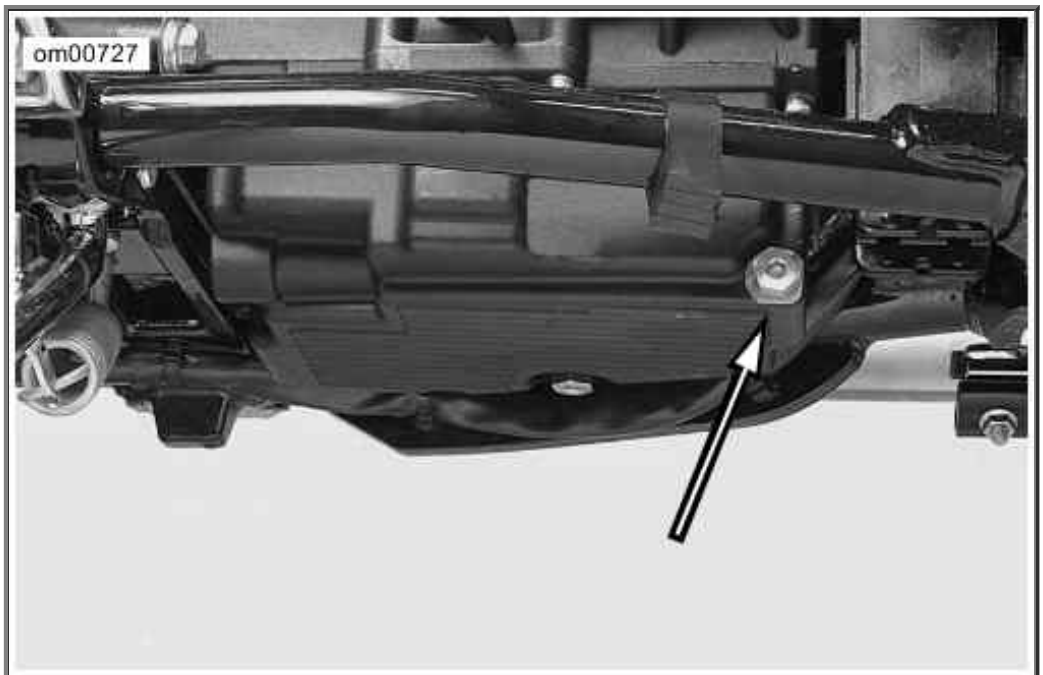

Engine Oil Drain Plug (oil pan under transmission, view from left side of vehicle)

1. Ride motorcycle until engine is warmed up to normal operating temperature.

2. See Engine Oil Dipstick Location: FXDFSE2. Unthread the cap to remove the oil filler plug/dipstick.

3. See Engine Oil Drain Plug (oil pan under transmission, view from left side of vehicle). Remove the engine oil drain plug with o-ring. Allow oil to completely drain into a suitable container.

CAUTION

Use Harley-Davidson oil filter wrench for filter removal. This tool can prevent damage to crankshaft position sensor and/or sensor cable. (00192b)

4. See Oil Filter Wrenches. Remove the oil filter using the OIL FILTER WRENCH HD-42311 or OIL FILTER WRENCH HD-44067-A . Clean the oil filter mount flange of any old gasket material.

   NOTE:

   Dispose of oil and oil filter in accordance with local regulations.

5. See Applying Thin Oil Film. Apply a thin film of engine oil to the gasket and install new filter. Hand-tighten oil filter one-half to three-quarter turn after gasket contacts filter mounting surface.

6. See Engine Oil Drain Plug (oil pan under transmission, view from left side of vehicle). Install oil tank drain plug.

   a. Inspect O-ring for tears or damage. Replace if required. Wipe any foreign material from plug.

   b. Install O-ring and drain plug and tighten to 14-21 ft-lbs (19.0-28.5 Nm).

CAUTION

Do not overfill oil tank. Doing so can result in oil carryover to the air cleaner leading to equipment damage and/or equipment malfunction. (00190a)

7. Refer to Recommended Synthetic Engine Oils. Fill oil tank with the correct amount of oil. Use the proper grade of oil for the lowest temperature expected before next oil change. Use 2.5 U.S. quarts 2.4 liters of engine oil for a capacity refill.

8. Check engine oil level using **COLD CHECK** procedure.

9. Start engine and carefully check for oil leaks around drain plug and oil filter.

10. Check engine oil level using **HOT CHECK** procedure.

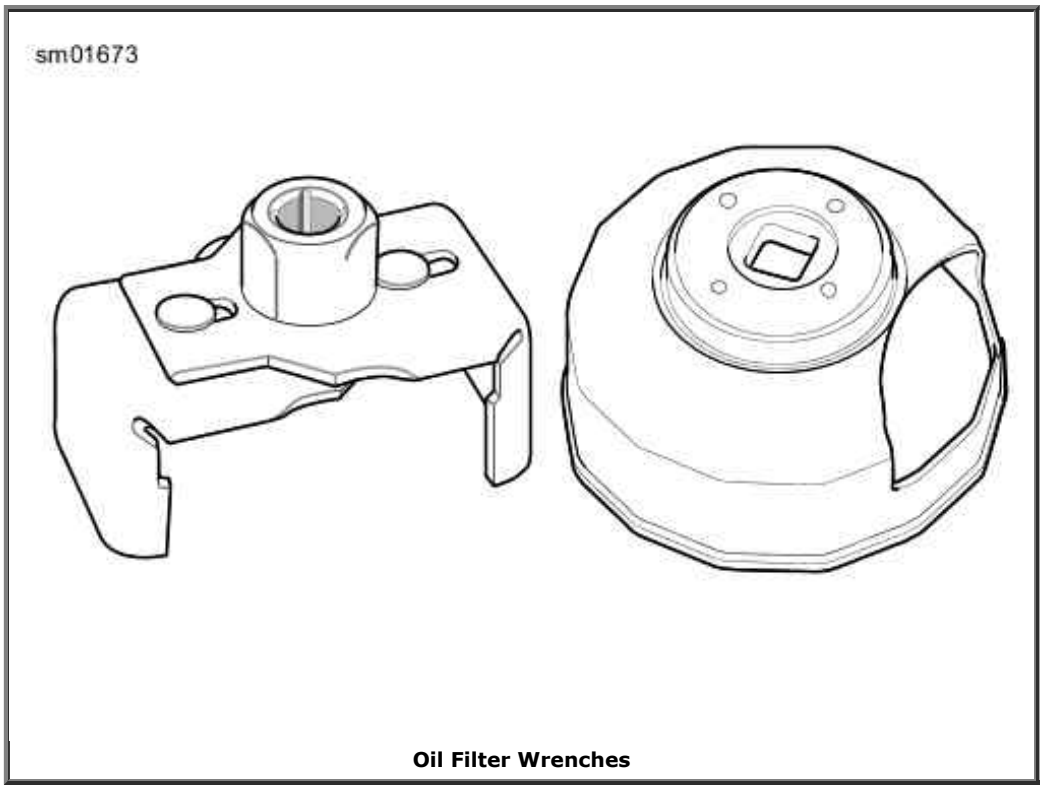

Oil Filter Wrenches

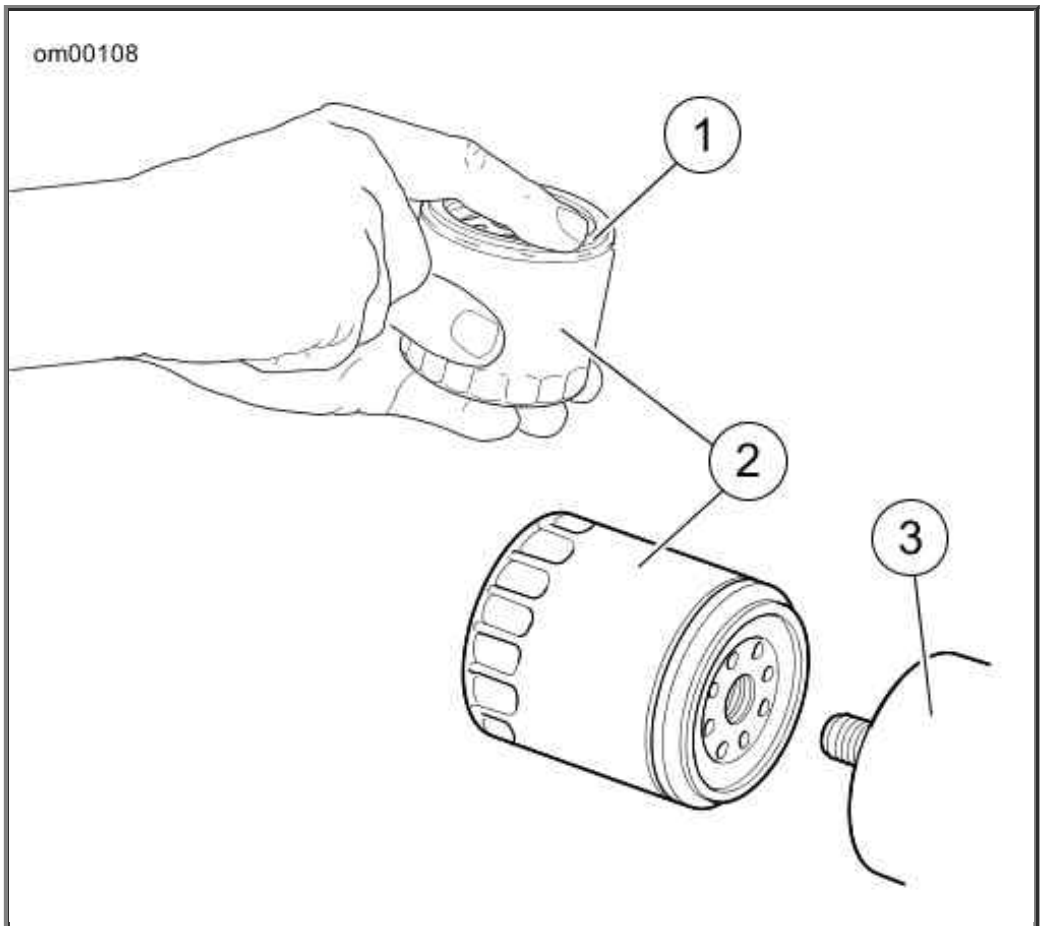

1. Thin film of oil ONLY
2. Oil filter
3. Mounting plate

Applying Thin Oil Film

Winter Lubrication

In colder climates, the engine oil should be changed often. If motorcycle is used frequently for short trips, less than 15 mi 24 km , in ambient temperatures below 60 °F 16 °C , oil change intervals should be reduced to 1500 mi 2400 km . Motorcycles used only for short runs must have a thorough tank flush-out before **new** oil is put in. The tank flush-out should be performed by an authorized dealer or qualified technician.

NOTE:

The further below freezing the temperature drops, the shorter the oil change interval should be.

Water vapor is a normal by-product of combustion in any engine. During cold weather operation, some of the water vapor condenses to liquid form on the cool metal surfaces inside the engine. In freezing weather this water will become slush or ice and, if allowed to accumulate too long, may block the oil lines and cause damage to the engine.

If the engine is run frequently and allowed to thoroughly warm up, most of this water will become vapor again and will be blown out through the crankcase breather.

If the engine is not run frequently and allowed to thoroughly warm up, this water will accumulate, mix with the engine oil and form a sludge that is harmful to the engine.

Transmission Lubrication

The transmission lubricant level should be checked monthly.

Your motorcycle comes equipped with Screamin' Eagle SYN3 Synthetic Motorcycle Lubricant. For transmission lubrication, it is not recommended to mix SYN3 with other lubricant products.

Refer to Regular Service Intervals: 2010 FXDFSE2 Models. The transmission should be drained and refilled with fresh lubricant at proper intervals.

NOTE:

When checking the transmission lubricant level, the motorcycle should be leaning on the jiffy stand. Allow a short period of time to equalize lubricant level in the transmission compartments.

Check Lubricant Level

---

1. Park motorcycle on the jiffy stand.
2. See Transmission Filler Plug/Dipstick Location: FXDFSE2. Remove the threaded filler plug/dipstick by turning the plug counterclockwise.
3. See Transmission Filler Plug/Dipstick Lubricant Level. Wipe off filler plug/dipstick and insert it back in the filler hole. Do not screw in. (Dipstick should rest on threads of the case.)
4. Remove the plug/dipstick and check the level. The lubricant level should be in the hash marks between the ADD and FULL lines on the dipstick.

⚠WARNING

Be sure that no lubricants or fluids get on tires, wheels or brakes when changing fluid. Traction can be adversely affected, which could result in loss of control of the motorcycle and death or serious injury. (00047d)

CAUTION

When draining or adding lubricant, do not allow dirt, debris or other contaminants to enter the engine. (00198a)

5. If the lubricant level is below the ADD mark, add lubricant. Do not overfill (bringing the level above the FULL mark) or leakage may occur. The transmission fluid capacity is approximately 32 fluid ounces 0.95 liters .

   NOTES:
   - *When filling the transmission, use Screamin' Eagle SYN3 Synthetic Motorcycle Lubricant (Part No. 99824-03, U.S. quart).*
   - *If SYN3 is not available and addition of lubricant to the transmission is required, SYN3 must be completely drained before using other lubricant products. A residual amount of fluid will remain. It is not required to flush out the residual fluid.*

6. Inspect O-ring for tears or damage. Replace if required. Wipe any foreign material from plug.
7. Install threaded filler plug/dipstick and tighten to 25-75 in-lbs (2.8-8.5 Nm).

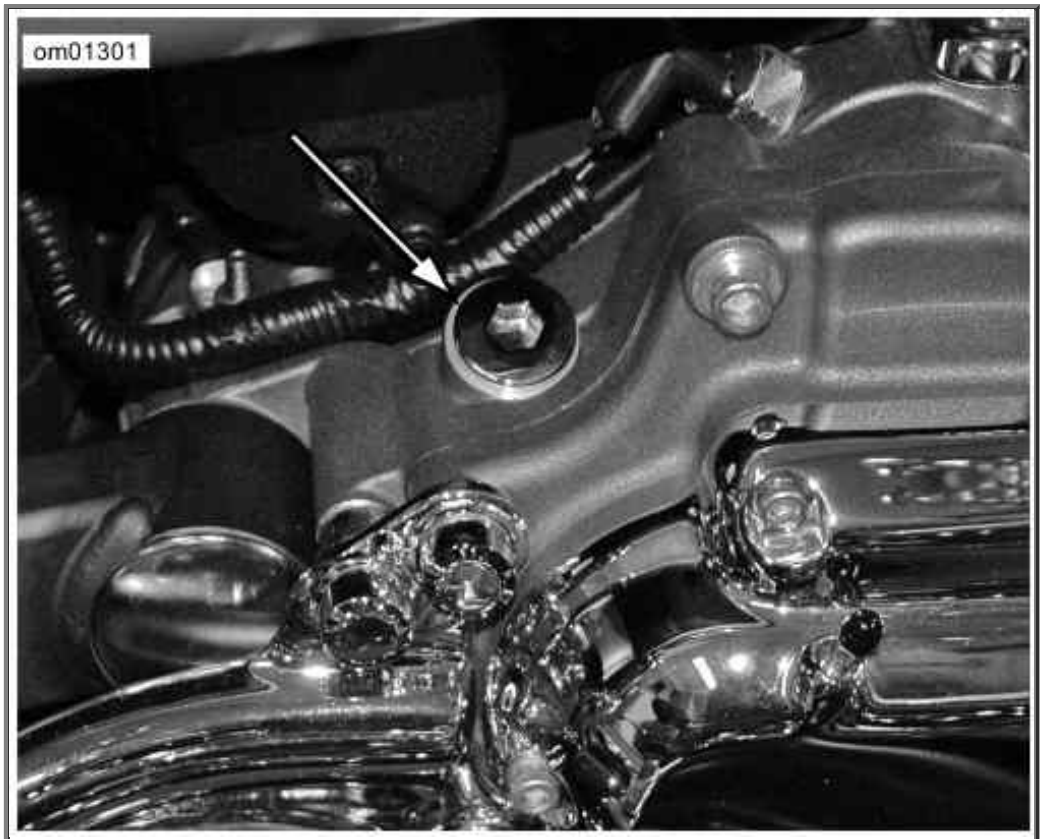

Transmission Filler Plug/Dipstick Location: FXDFSE2

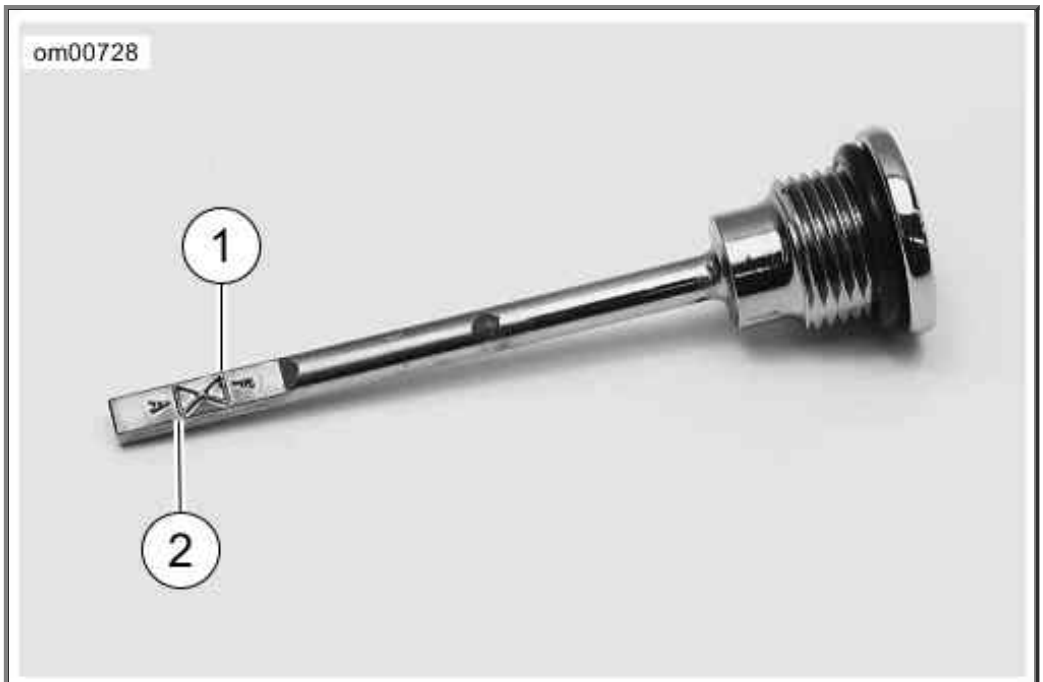

1. FULL
2. ADD

Transmission Filler Plug/Dipstick Lubricant Level

Changing Transmission Lubricant

1. See Transmission Filler Plug/Dipstick Location: FXDFSE2. Remove the transmission filler plug/dipstick.

2. See Transmission Drain Plug. Remove transmission drain plug and drain lubricant into a suitable container.

CAUTION

When draining or adding lubricant, do not allow dirt, debris or other contaminants to enter the engine. (00198a)

⚠WARNING

Be sure that no lubricants or fluids get on tires, wheels or brakes when changing fluid. Traction can be adversely affected, which could result in loss of control of the motorcycle and death or serious injury. (00047d)

NOTE:

Dispose of transmission lubricant in accordance with local regulations.

3. Inspect o-ring for tears or damage on the drain plug. Replace if required. Wipe any foreign material from plug.
4. Install drain plug and tighten to 14-21 ft-lbs (19.0-28.5 Nm).
5. Fill the transmission with 32 fluid ounces 0.95 liters of Screamin' Eagle SYN3 Synthetic Motorcycle Lubricant (Part No. 99824-03, U.S. quart). Do not overfill or leakage may occur.
6. Install threaded filler/check plug and tighten to 25-75 in-lbs (2.8-8.5 Nm).
7. Start engine and carefully check for lubricants leaks around drain plug.

Transmission Drain Plug

Primary Chaincase Lubrication

Lubrication is a major factor in the performance and service life of the clutch components.

Refer to Regular Service Intervals: 2010 FXDFSE2 Models. The primary chaincase should be drained and refilled with fresh lubricant at proper intervals.

NOTE:

Use only GENUINE Harley-Davidson FORMULA+ TRANSMISSION AND PRIMARY CHAINCASE LUBRICANT (Part No. 99851-05 quart) when changing primary chaincase lubricant.

Chaincase Lubricant: Synthetic Oil

Refer to Regular Service Intervals: 2010 FXDFSE2 Models. The chaincase lubricant should be drained and refilled with fresh lubricant at proper intervals.

CAUTION

Do not overfill the primary chaincase with lubricant. Overfilling can cause rough clutch engagement, incomplete disengagement, clutch drag and/or difficulty in finding neutral at engine idle. (00199b)

Changing Chaincase Lubricant

---

1. Ride motorcycle until engine is warmed up to normal operating temperature.

CAUTION

When draining or adding lubricant, do not allow dirt, debris or other contaminants to enter the engine. (00198a)

2. See Clutch Cover. Using a T27 TORX drive head, remove five screws (3) (with captive washers) to release clutch inspection cover (2) from primary chaincase cover.
3. See Removal/Installation of Chaincase Drain Plug. Remove magnetic drain plug at bottom of inner primary chaincase cover. Drain lubricant into suitable container.

   NOTE:

   Dispose of chaincase lubricant in accordance with local regulations.

4. Clean drain plug. If plug has accumulated a lot of debris, inspect the condition of the chaincase components.
5. Install **new** O-ring on drain plug.
6. Install drain plug back into inner primary chaincase cover. Tighten plug to 14-21 ft-lbs (19.0-28.5 Nm).

CAUTION

Do not overfill the primary chaincase with lubricant. Overfilling can cause rough clutch engagement, incomplete disengagement, clutch drag and/or difficulty in

finding neutral at engine idle. (00199b)

7. Pour 32 fluid ounces 0.95 liter of Harley-Davidson Screamin' Eagle SYN3 Synthetic Motorcycle Lubricant (Part No. 99824-03, U.S. quart) through the clutch inspection cover opening.

⚠WARNING

Be sure that no lubricants or fluids get on tires, wheels or brakes when changing fluid. Traction can be adversely affected, which could result in loss of control of the motorcycle and death or serious injury. (00047d)

CAUTION

When draining or adding lubricant, do not allow dirt, debris or other contaminants to enter the engine. (00198a)

NOTE:

Use only Harley-Davidson Screamin' Eagle SYN3 Synthetic Motorcycle Lubricant.

8. Install clutch inspection cover and **new** gasket as follows:

   a. Thoroughly wipe all lubricant from cover mounting surface and groove in chaincase.

   b. Position gasket in groove in primary chaincase cover and press each of the nubs on gasket into the groove. The nubs will hold the seal in position.

   c. Insert screw (with captive washer) through clutch inspection cover and thread it into the top cover screw hole.

   d. Start the remaining four screws (with captive washers).

   e. Using a T27 TORX drive head, alternately tighten screws to 84-108 in-lbs (9.5-12.2 Nm).

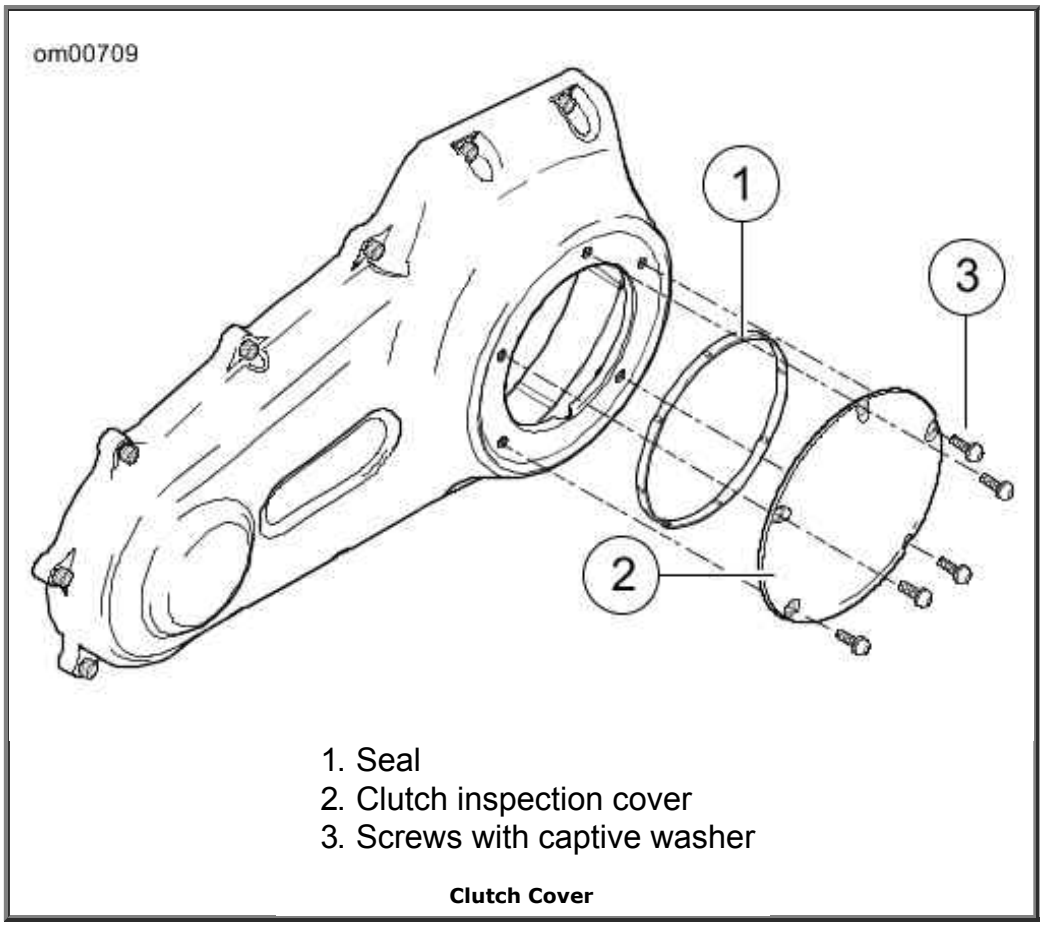

Clutch Cover

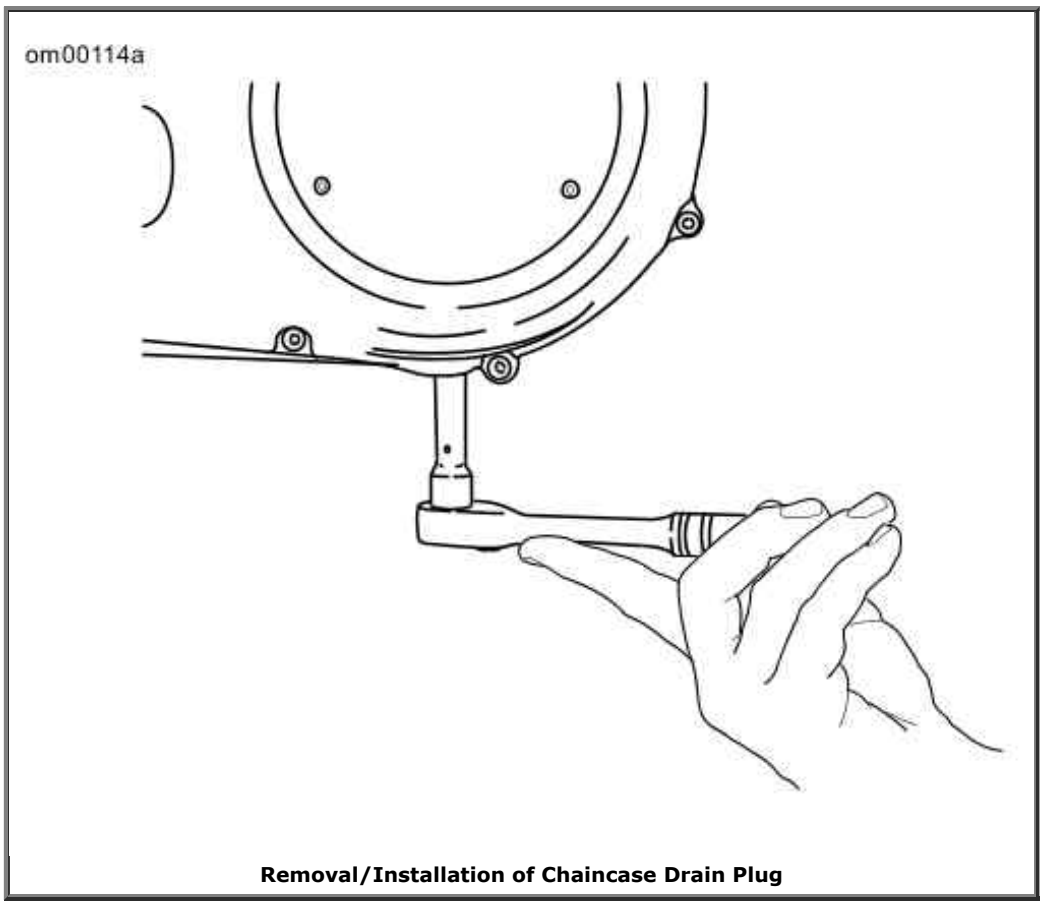

Removal/Installation of Chaincase Drain Plug

Drive Belt

General

The inner tooth surface of the secondary belt has a thin coating of polyethylene lubricant. During initial operation, this coating will wear off as it is burnished into the belt fabric. This is a normal condition and not an indication of belt wear.

Refer to Regular Service Intervals: 2010 FXDFSE2 Models. Belt tension is set at the factory and should be checked after the first 1000 miles 1600 kilometers and at proper intervals thereafter.

Checking Deflection

See Belt Deflection: FXDFSE2. Check belt deflection at the loosest spot in the belt with the transmission in neutral and the motorcycle at ambient temperature. Use the BELT TENSION GAUGE HD-35381 to apply 10 lb 4.5 kg of force at the midpoint of the bottom belt strand with motorcycle resting on jiffy stand.

See Belt Deflection Window. Locate the belt deflection window on the rear drive belt guard/debris deflector and note the belt position relative to the deflection graduations.

Belt deflection should be within 1/4-5/16 in. 6.4-7.9 mm . If belt tension adjustment is necessary, see a Harley-Davidson dealer or follow the instructions given in the applicable service manual.

⚠WARNING

Be sure wheel and brake caliper are aligned. Riding with a misaligned wheel or brake caliper can cause the brake disc to bind and lead to loss of control, which could result in death or serious injury. (00050a)

Check rear brake caliper position on rear brake disc. Disc should run true within brake caliper.

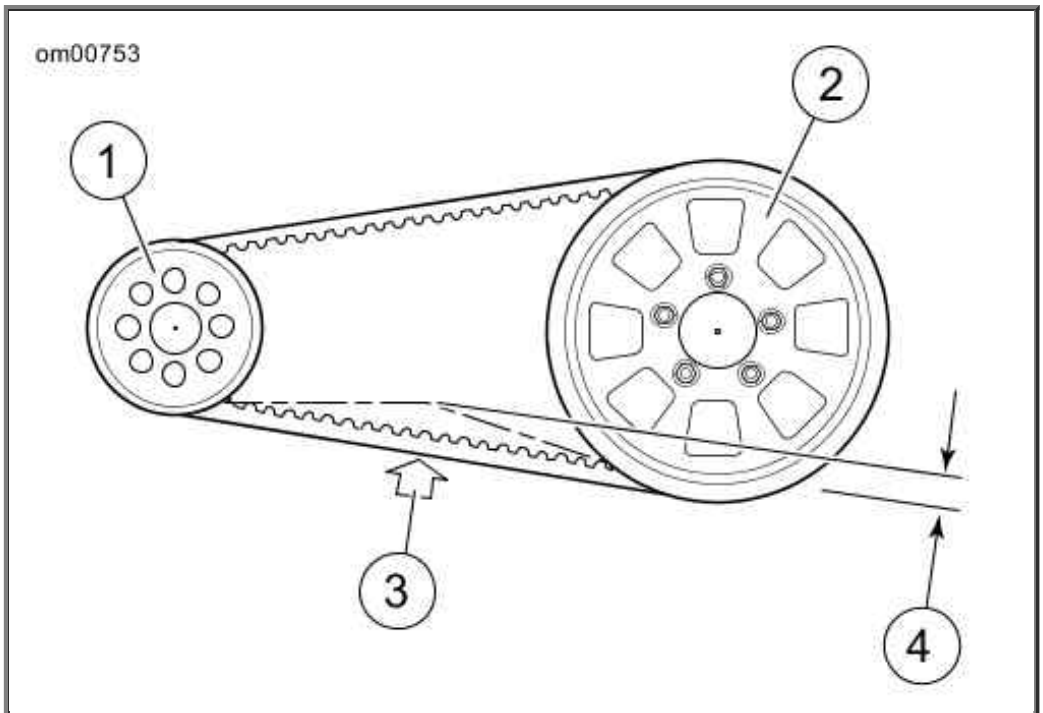

1. Transmission sprocket
2. Rear wheel sprocket
3. Force of 10 lbs (4.5 kg)
4. Belt deflection of 1/4-5/16 in. (6.4-7.9 mm)

Belt Deflection: FXDFSE2

Belt Deflection Window

Chassis Lubrication

Refer to Regular Service Intervals: 2010 FXDFSE2 Models for all maintenance schedules.

NOTE:

Use recommended special purpose grease for steering head bearings. Use a multipurpose chassis grease for other applications.

1. Remove and lubricate handlebar throttle control grip sleeve with fresh graphite.
2. Lubricate throttle control cables and clutch control cable.
3. Lubricate front brake hand lever and clutch control hand lever only if necessary.
4. Inspect rear fork pivot shaft bearings.
5. Pack the steering head bearings with fresh grease.
6. Lubricate the jiffy stand mechanism with SILVER GRADE ANTI-SEIZE (Part No. 98960-97).

NOTE:

For model specific information regarding the chassis lubrication, refer to the appropriate Service Manual or see a Harley-Davidson dealer.

Oil Applications

Refer to Regular Service Intervals: 2010 FXDFSE2 Models for all control connections and parts. Vehicle should be oiled at regular intervals, particularly after washing motorcycle or driving in wet weather.

Front Fork Oil: Dyna Models

Refer to Regular Service Intervals: 2010 FXDFSE2 Models. At the scheduled service interval, see a Harley-Davidson dealer for fork oil replacement. If the fork does not appear to be working properly or an appreciable amount of oil leakage should develop, see a Harley-Davidson dealer. If there is insufficient oil in either side of fork, the rebound action will be incorrect.

Fuel Filter

Fuel injected motorcycles have a fuel filter attached to the fuel pump.

NOTE:

For model specific information regarding fuel filter maintenance, refer to the appropriate Service Manual or see a Harley-Davidson dealer.

Hydraulic Clutch

Refer to Regular Service Intervals: 2010 FXDFSE2 Models. Check the fluid level as follows:

1. Stand the motorcycle upright (not leaning on the jiffy stand) on a level surface. Turn handlebar so the top of the clutch master cylinder is level.
2. Clean all dirt and debris from the clutch master cylinder cover. Remove the two clutch master cylinder cover screws and remove the cover.
3. Verify the fluid level in the clutch master cylinder reservoir is at the FULL LEVEL mark at the top of the ledge on the rear inside wall of the reservoir. If the fluid level is low, add D.O.T. 4

BRAKE FLUID (Part No. 99953-99A) approved for clutch system use and available from your Harley-Davidson dealer.

NOTE:

Do not overfill the clutch master cylinder reservoir. As the clutch friction discs wear, the piston in the clutch cylinder will force fluid back into the reservoir which could cause fluid overflow.

⚠CAUTION

Direct contact of D.O.T. 4 brake fluid with eyes can cause irritation. Avoid eye contact. In case of eye contact flush with large amounts of water and get medical attention. Swallowing large amounts of D.O.T. 4 brake fluid can cause digestive discomfort. If swallowed, obtain medical attention. Use in well ventilated area. KEEP OUT OF REACH OF CHILDREN. (00240a)

CAUTION

D.O.T. 4 hydraulic brake fluid is used in the hydraulic clutch. Do not use other types of fluids as they are not compatible and could cause equipment damage. (00353a)

CAUTION

Do not allow dirt or debris to enter the master cylinder reservoir. Dirt or debris in the reservoir can cause improper operation and equipment damage. (00205c)

CAUTION

D.O.T. 4 brake fluid will damage painted and body panel surfaces it comes in contact with. Always use caution and protect surfaces from spills whenever brake work is performed. Failure to comply can result in cosmetic damage. (00239b)

4. Inspect the clutch master cylinder cover gasket for rips, cuts, cracks or other signs of damage. Replace the gasket if necessary. Carefully place the cover and cover gasket on the master cylinder reservoir and secure with the two cover screws. Tighten the screws to 6-8 in-lbs (0.68-0.90 Nm).

   NOTE:

   If the fluid level in the clutch master cylinder reservoir is correct but the clutch does not operate properly, refer to the service manual or see your Harley-Davidson dealer for service.

Hydraulic Lifters

The hydraulic lifters are self-adjusting. They automatically adjust length to compensate for engine

expansion and valve mechanism wear. This keeps the valve mechanism free of lash when the engine is running.

When starting an engine which has been turned off even for a few minutes, the valve mechanism may be slightly noisy until the hydraulic units completely refill with oil. If at any time the valve mechanism becomes abnormally noisy, other than for a short period immediately after engine is started, it is an indication that one or more of the hydraulic units may not be functioning properly.

Always check the engine oil level first since normal circulation of oil through the engine is necessary for proper operation of the hydraulic lifters.

If engine oil is at the proper level, the lifters may not be functioning properly because of dirt in the oil supply passages leading to the lifter units. See a Harley-Davidson dealer for service.

Front Fork Bearings

⚠WARNING

Adjustments to front fork bearings should be performed by a Harley-Davidson dealer. Improperly adjusted bearings can adversely affect handling and stability, which could result in death or serious injury. (00051a)

Refer to Regular Service Intervals: 2010 FXDFSE2 Models. Check front fork for proper bearing adjustment and lubricate bearings at proper intervals.

With motorcycle front end raised off the floor, be sure front fork turns freely without any binding or interference and that there is no appreciable front to rear fork shake indicating excessive bearing looseness. Steering head bearings should be adjusted according to Service Manual procedure, if necessary.

Rear Fork Pivot Shaft

Refer to Regular Service Intervals: 2010 FXDFSE2 Models. Check the tightness of the rear fork pivot shaft fastener at proper intervals.

NOTE:

For model specific information regarding the rear fork pivot shaft, refer to the appropriate Service Manual or see a Harley-Davidson dealer.

Brakes

⚠WARNING

Inspect brake pads for wear at service maintenance intervals. If you ride under adverse conditions (steep hills, heavy traffic, etc.), inspect more frequently. Excessively worn brake pads can lead to brake failure, which could result in death or serious injury. (00052a)

1. Refer to Regular Service Intervals: 2010 FXDFSE2 Models. Check brake pads and

brake discs for wear at proper intervals.

2. Check the fluid level in the master cylinder reservoirs at proper intervals.
3. If level is low, clean dirt and debris from reservoir cover before removing.

CAUTION

D.O.T. 4 brake fluid will damage painted and body panel surfaces it comes in contact with. Always use caution and protect surfaces from spills whenever brake work is performed. Failure to comply can result in cosmetic damage. (00239b)

⚠CAUTION

Direct contact of D.O.T. 4 brake fluid with eyes can cause irritation. Avoid eye contact. In case of eye contact flush with large amounts of water and get medical attention. Swallowing large amounts of D.O.T. 4 brake fluid can cause digestive discomfort. If swallowed, obtain medical attention. Use in well ventilated area. KEEP OUT OF REACH OF CHILDREN. (00240a)

4. Add D.O.T. 4 HYDRAULIC BRAKE FLUID (Part No. 99953-99A) if necessary.

NOTE:

Use only D.O.T. 4 HYDRAULIC BRAKE FLUID (Part No. 99953-99A) approved for brake system use and available from your Harley-Davidson dealer.

Harley-Davidson has provided your new motorcycle with the optimum brake pad friction material available. It is selected to give the best performance possible under dry, wet and high operating temperature conditions. It exceeds all regulatory requirements currently in effect. However, during some braking conditions you may experience noise. This is normal for this friction material.

⚠WARNING

Brakes are a critical safety component. Contact a Harley-Davidson dealer for brake repair or replacement. Improperly serviced brakes can adversely affect brake performance, which could result in death or serious injury. (00054a)

See Brake Friction Material. Visual inspection of brake pads can be made without removing the caliper. View the lower area of each caliper with a flashlight.

⚠WARNING

Perform routine scheduled brake maintenance. Lack of maintenance at recommended intervals can adversely affect brake performance, which could result in death or

serious injury. (00055a)

⚠WARNING

Always replace brake pads in complete sets for correct and safe brake operation. Improper brake operation could result in death or serious injury. (00111a)

NOTES:

- *If the brake pad friction material is 0.04 in 1.02 mm thick or less, the pads must be replaced immediately.*
- *Always replace brake pads in pairs.*

The rear brake outer pad on all models can be measured from the caliper bracket side using a thin plastic 6.0 in 152.4 mm rule. Place the rule against the brake disc through the space alongside the caliper.

The outer surface of the brake pad backing plate should measure 0.04 in 1.02 mm or more away from the brake disc.

NOTE:

Replace pads if brake friction material is 0.04 in 1.02 mm or less above the backing plate.

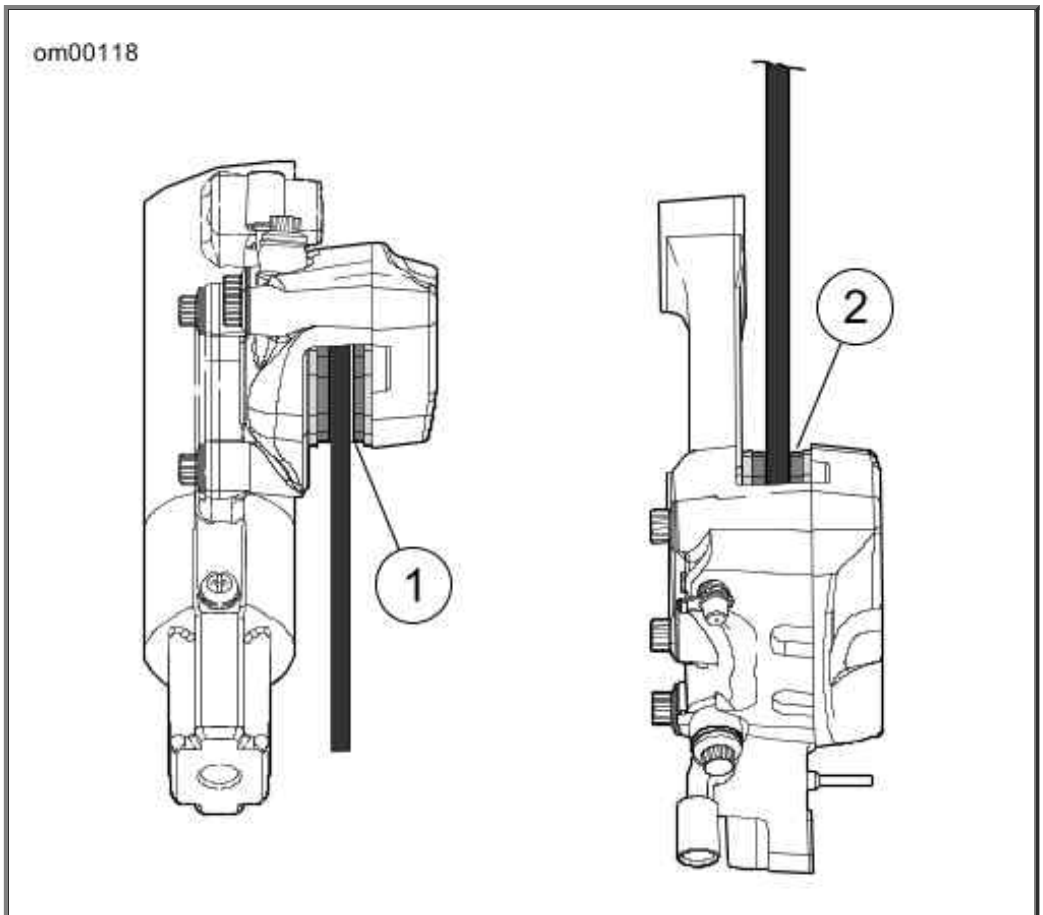

1. Front brake, viewed from below
2. Rear brake, viewed from above

Brake Friction Material

Tires

See Specifications for tire pressures and sizes.

- Be sure to keep tires properly inflated.
- Follow tire data for correct cold tire inflation pressures.
- Check before riding when tires are cold.
- Do not over-inflate tires.

⚠WARNING

Do not inflate tire beyond maximum pressure as specified on sidewall. Over inflated tires can blow out, which could result in death or serious injury. (00027a)

⚠WARNING

Match tires, tubes, air valves and caps to the correct wheel rim. Contact a Harley-Davidson dealer. Mismatching can result in damage to the tire bead, allow tire slippage on the rim or cause tire failure, which could result in death or serious injury. (00023a)

Check inflation pressure and inspect tread for punctures, cuts, breaks, etc., at least weekly if in daily use. Check before each trip if used occasionally.

⚠WARNING

Be sure tires are properly inflated, balanced and have adequate tread. Inspect your tires regularly and see a Harley-Davidson dealer for replacements. Riding with excessively worn, unbalanced or under-inflated tires can adversely affect stability and handling, which could result in death or serious injury. (00014a)

Same as original equipment tires should be used. Other tires may not fit correctly, could adversely affect handling, and may be hazardous to use.

⚠WARNING

Tires are a critical safety component. Contact a Harley-Davidson dealer for tire repair or replacement. Improper tire service can adversely affect stability and handling, which could result in death or serious injury. (00057a)

⚠WARNING

Replace punctured or damaged tires. In some cases, small punctures in the tread area may be repaired from within the demounted tire by a Harley-Davidson dealer. Speed should NOT exceed 50 mph (80 km/h) for the first 24 hours after repair, and the repaired tire should NEVER be used

over 80 mph (130 km/h). Failure to follow this warning could result in death or serious injury. (00015a)

⚠WARNING

Striking an object, such as a curb, can cause internal tire damage. If an object is struck, remove and inspect both the inside and outside of the tire. A damaged tire can adversely affect stability and handling, which could result in death or serious injury. (00058a)

Tire Replacement

Inspection

⚠WARNING

Harley-Davidson tires are equipped with wear bars that run horizontally across the tread. When wear bars become visible and only 1/32 in. (0.8 mm) tread depth remains, replace tire immediately. Using a worn tire can adversely affect stability and handling, which could result in death or serious injury. Use only Harley-Davidson approved replacement tires. (00090b)

See Tire Sidewall Wear Bar Locator. Arrows on tire sidewalls pinpoint location of wear bar indicators.

Tread wear indicator bars will appear on tire tread surfaces when 1/32 in 0.8 mm or less of tire tread remains. See Wear Bar Appearance . Always replace tires before the tread wear indicator bars appear.

When To Replace Tires

New tires are needed if any of the following conditions exist:

1. Tread wear indicator bars become visible on the tread surfaces.
2. Tire cords or fabric become visible through cracked sidewalls, snags or deep cuts.
3. A bump, bulge or split in the tire.
4. Puncture, cut or other damage to the tire that cannot be repaired.

When installing tires on rims, do not rely on tread design to determine direction of rotation. Always be sure the rotational arrows molded into the sidewalls point in the direction of rotation when the vehicle is moving forward.

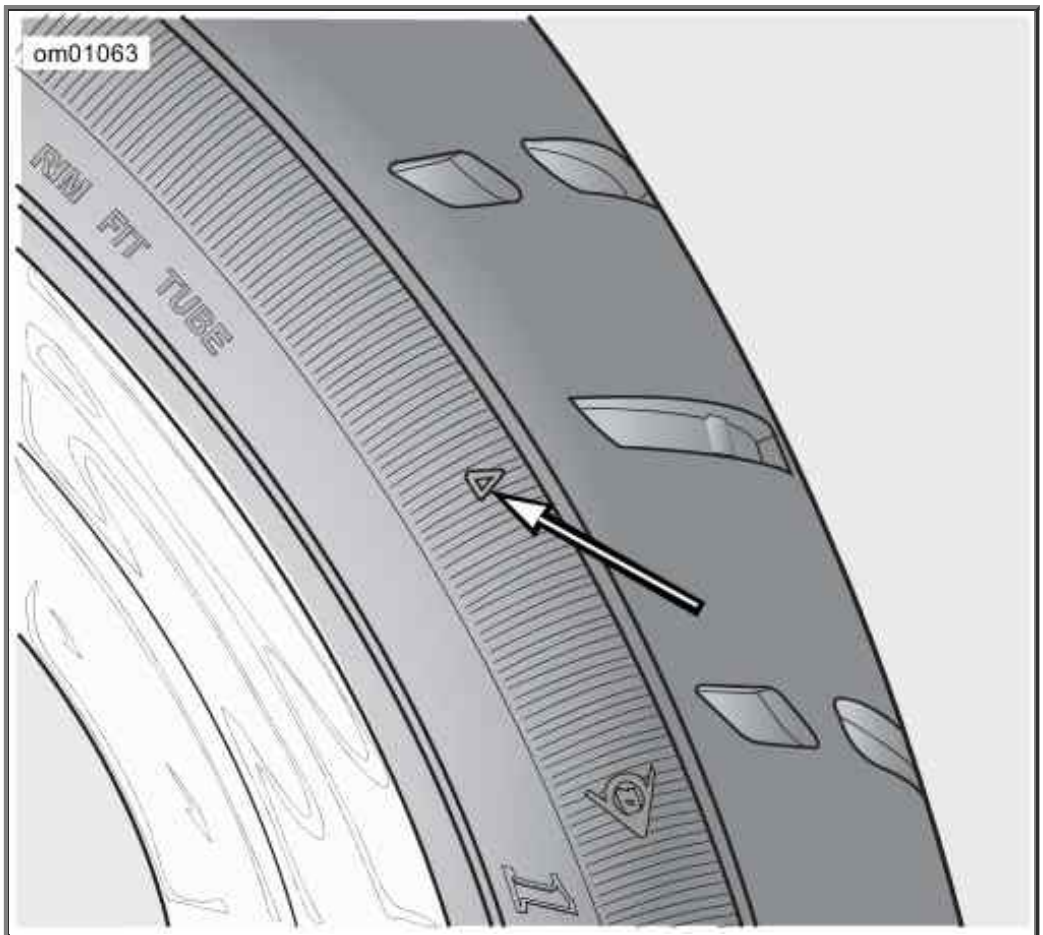

Tire Sidewall Wear Bar Locator

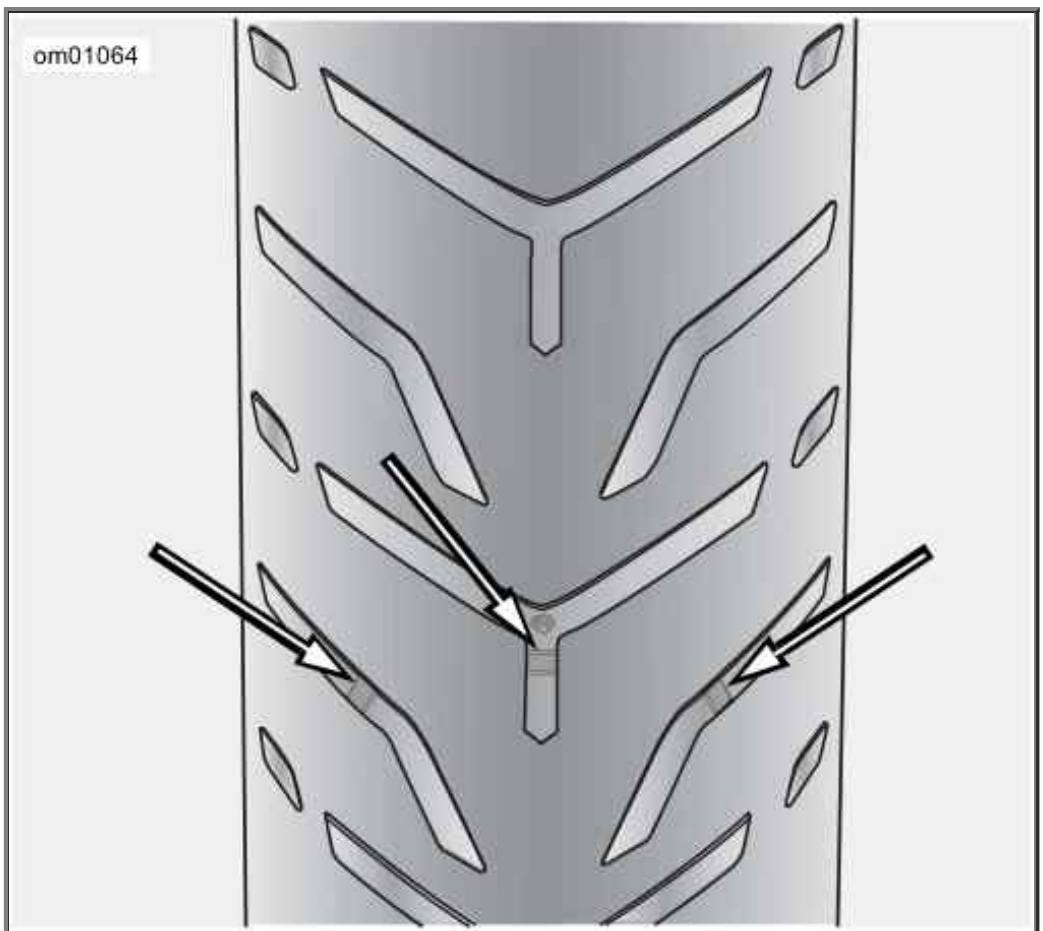

Wear Bar Appearance

Vehicle Alignment

Refer to Regular Service Intervals: 2010 FXDFSE2 Models. Vehicle alignment should be checked at regular intervals. This includes whenever the rear wheel is removed and installed or when the rear drive belt is adjusted. Stabilizer links and engine mounts should be checked at proper intervals for wear according to service manual procedures.

Vehicle alignment is important. Vehicle stability is adversely affected if wheels are out of alignment. Major alignment of the front and rear wheel is partially controlled by the stabilizer link at the top of the engine. See a Harley-Davidson dealer for this service.

⚠WARNING

Do not change stabilizer link adjustment. Changing adjustment can adversely affect stability, which could result in death or serious injury. (00059a)

⚠WARNING

Only a Harley-Davidson dealer should perform vehicle alignment. Improper alignment can adversely affect stability and handling, which could result in death or serious injury. (00060a)

Shock Absorbers

Inspect shock absorbers and rubber bushings for leaks and bushing deterioration at proper intervals.

Spark Plugs

⚠WARNING

Disconnecting spark plug cable with engine running can result in electric shock and death or serious injury. (00464b)

⚠CAUTION

Do NOT pull on any electrical wires. Pulling on electrical wires may damage the internal conductor causing high resistance, which may result in minor or moderate injury. (00168a)

Refer to Regular Service Intervals: 2010 FXDFSE2 Models before servicing spark plugs. Check the spark plugs at proper intervals.

1. Disconnect spark plug cables from plugs by pulling up on the molded connector caps.
2. Check spark plug type. Only use those spark plugs specified for your model motorcycle.

   NOTE:

*If a torque wrench is not available, tighten **new** spark plugs finger-tight and then tighten an additional one-quarter turn with a spark plug wrench.*

3. Check spark plug gap against specifications table.
4. Always tighten to the proper torque. Spark plugs must be tightened to the torque specified for proper heat transfer.
5. Connect each molded connector cap until the cap snaps firmly into place over the spark plug.

Ignition

The engine in your motorcycle has been designed specifically to achieve optimum fuel economy within exhaust emission controls. Factory programmed ignition characteristics provide maximum engine performance and driveability.

Air Cleaner

Refer to Regular Service Intervals: 2010 FXDFSE2 Models. Inspect filter element at proper intervals and service as required. Under dusty conditions, inspect more often.

CAUTION

Install air filter before running engine. Failure to do so can draw debris into the engine and could result in engine damage. (00207a)

Domestic Models

See Air Cleaner. On domestic models, the high flow air cleaner has a cotton gauze filter element and water-resistant rain sock.

Riding a motorcycle equipped with an exposed oiled air filter under wet or rainy conditions is NOT recommended. Install the rain sock over the filter element under these circumstances.

NOTES:

- *The use of cleaning, drying or oiling methods or products other than those shown will damage the filter and void the manufacturer's warranty.*
- *K&N Air Filter Cleaner is available from a Harley-Davidson Dealer, either alone (1 qt/0.95 L sprayer bottle, Part Number 99883-88T) or a 12 fl oz/0.35 L sprayer bottle as part of the Filter Care Service Kit (Part Number 99850-92T).*
- *K&N Air Filter Oil is also available from a Harley-Davidson Dealer, either alone (12.25 oz/ 347 gram aerosol can, Part Number 99882-88T) or a 6.5 oz/ 184 gram aerosol can as part of the Filter Care Service Kit.*
- *DO NOT OVER-OIL THE AIR FILTER. Over-oiling may interfere with the proper performance of the engine and/ or certain engine components. If oil is still draining or dripping from the filter media twenty minutes after oiling, re-clean and re-oil the filter element.*

1. Loosen the hose clamp retaining the air filter element assembly to the air tube. Separate the

element from the air tube.

2. Tap the element to dislodge any loose dirt, then gently brush with a soft bristle brush.

3. Spray air filter cleaner liberally onto the cotton filter media and let soak for ten minutes, OR roll or soak the cotton filter media in a shallow pan of air filter cleaner. Remove immediately, and let soak for ten minutes.

4. Rinse off the filter media (flowing from the clean side to the dirty side), with low-pressure tap water.

5. After rinsing, shake off all excess water, and let the filter media air-dry naturally. DO NOT use compressed air or a heat gun to speed drying.

6. After the filter media is **completely** dry, EITHER spray air filter oil along each pleat, once only, holding the spray nozzle approximately 3 inches 76 mm away from the media, OR carefully use a squeeze bottle to deposit oil along each pleat, once only. **Let the oil wick (absorb) into the filter media for twenty minutes before proceeding.**

7. After twenty minutes, inspect the filter media, and carefully apply oil to any remaining visible white spots on the filter media, and allow to absorb.

8. Slip the air filter element onto the intake tube approximately 5/8 inch 16 mm . Tighten the clamp around the filter element flange to 30-40 in-lbs (3.4-4.5 Nm).

International Models

See Air Cleaner: International Models or Air Cleaner: Japan Models. On international models, wash air filter element in luke warm water with a mild detergent. Do not use air cleaner filter oil on the element.

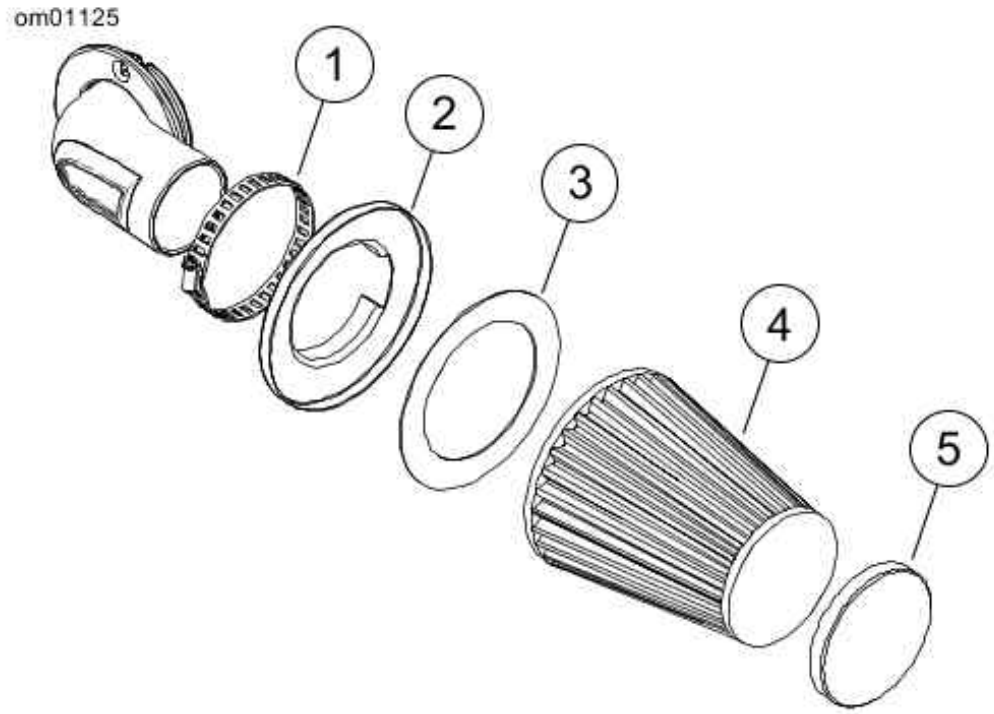

1. Clamp
2. Backplate
3. Gasket
4. Filter element
5. Cap

Air Cleaner

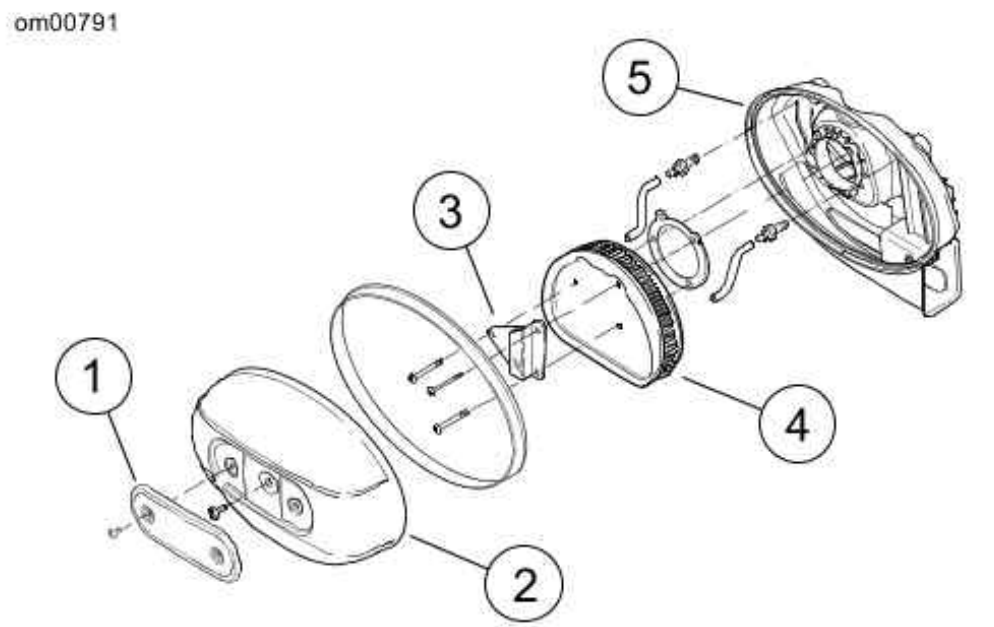

1. Insert
2. Cover
3. Bracket
4. Filter element
5. Backplate

Air Cleaner: International Models

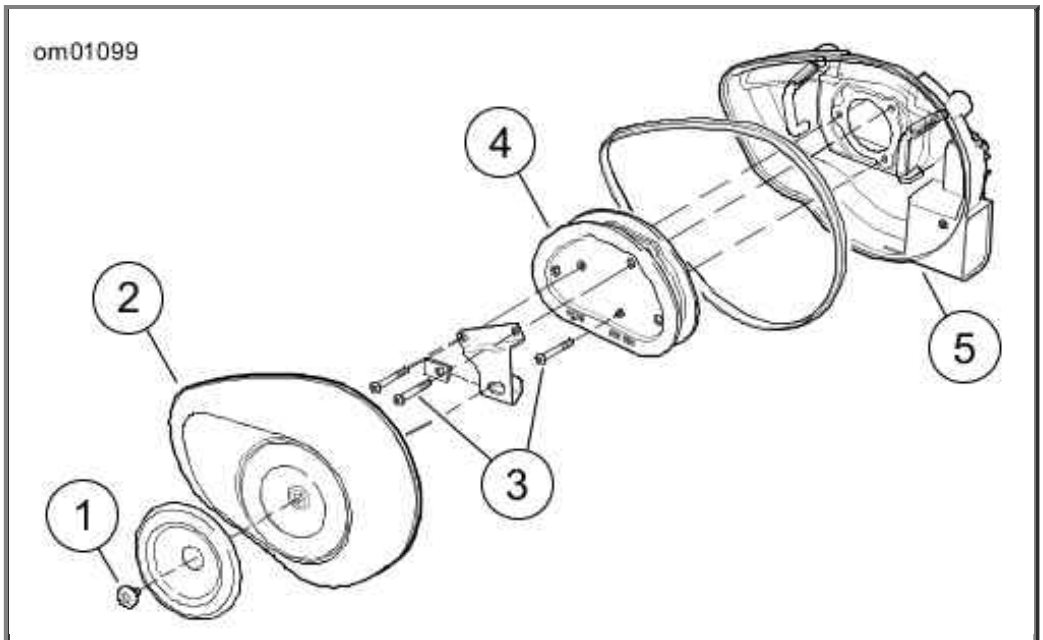

1. Cover screw
2. Air cleaner cover
3. Filter/bracket screws (3)
4. Filter element
5. Backplate

Air Cleaner: Japan Models

Headlamp Bulb Replacement: Dual Headlight

⚠WARNING

Handle bulb carefully and wear eye protection. Bulb contains gas under pressure, which, if not handled carefully, could cause serious eye injury. (00062b)

CAUTION

When replacement is required, use only the specified sealed beam unit or bulb, available from a Harley-Davidson dealer. An improper wattage sealed beam or bulb, can cause charging system problems. (00209a)

If a headlamp bulb filament burns out, the bulb must be discarded and a new bulb installed. Refer to Bulb Chart for bulbs.

Bulb Removal

NOTE:

Make note of components during disassembly to aid in correct assembly.

1. See Headlamp Bulbs: Dual Headlight. Remove mounting screws (7). Remove trim ring (4).
2. Remove bulb (2) and headlamp connector from back of headlamp lens (3).

3. Disconnect headlamp connector from bulb.
4. **For International Models:** Rotate connector (6) one-quarter turn and remove bulb assembly from housing. Pull position bulb (5) to remove.

Bulb Installation

CAUTION

Never touch the quartz bulb. Fingerprints will etch the glass and decrease bulb life. Handle the bulb with paper or a clean, dry cloth. Failure to do so could result in bulb damage. (00210b)

NOTE:

When installing a new bulb, be sure connector contacts are clean for good electrical contact.

1. See Headlamp Bulbs: Dual Headlight. Install new bulb and assemble the headlamp components.
2. **For International Models:** Install new bulb (5) in connector (6). Install connector in housing.
3. Install trim ring and screws.
4. If necessary, align headlamp assembly. See Headlamp Alignment.

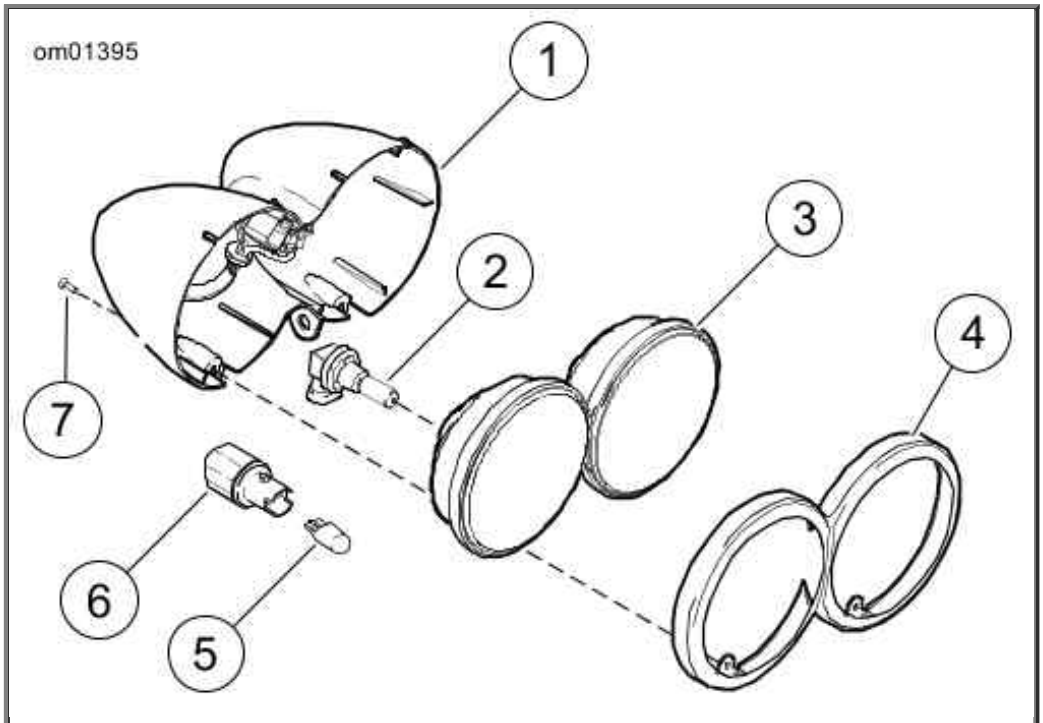

1. Dual bulb housing
2. Headlamp bulb(s)
3. Headlamp lens
4. Trim ring
5. Bulb, position - HDI models only
6. Connector - HDI models only
7. Mounting screw(s)

Headlamp Bulbs: Dual Headlight

Headlamp Alignment

WARNING

The automatic-on headlamp feature provides increased visibility of the rider to other motorists. Be sure headlamp is on at all times. Poor visibility of rider to other motorists can result in death or serious injury. (00030b)

NOTE:

Vehicles with multiple beam headlamps that are individually aimed should be adjusted so both lamps converge into one pattern.

1. Verify that front and rear tire inflation pressures are correct and that suspension is adjusted to the weight of the principal rider. See Specifications.
2. Fill fuel tank or add ballast to equal the weight of the fuel needed.

   NOTE:

   See Headlamp Alignment. To aid in properly placing the motorcycle, a perpendicular line (1) can be drawn on the floor. For best results, choose an area with minimum light.

3. See Headlamp Alignment. Draw a vertical line (2) on the wall.
4. Position motorcycle so that front axle is 25 ft 7.6 m from wall.

NOTE:

As the weight of the rider will compress the suspension slightly, have a person whose weight is approximately the same as that of the principal rider sit on the motorcycle.

5. With the vehicle laden and upright, point the front wheel straight forward at wall and measure the distance (4) from the floor to the center of the HIGH BEAM bulb.

6. Draw a horizontal line (5) through the vertical line on the wall that is 2.1 in 53.3 mm lower than the measured bulb centerline.

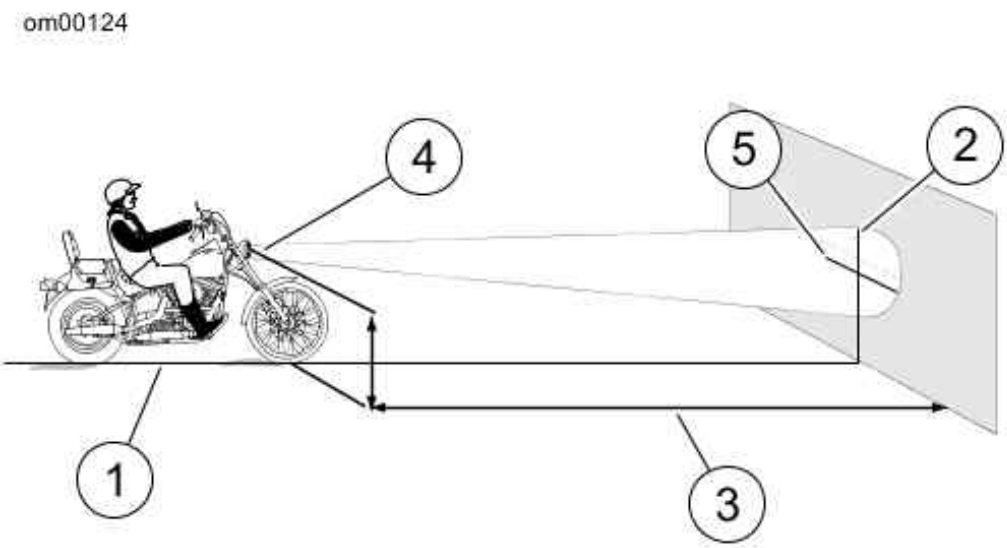

1. Perpendicular line
2. Vertical line
3. 25 feet (7.6 meters)
4. High beam bulb centerline
5. Horizontal line 2.1 in. (53.3 mm) lower than bulb centerline

Headlamp Alignment

7. See Headlamp Alignment. Verify headlamp alignment. Turn the ignition switch to IGNITION and set the headlamp switch to HIGH beam.

   a. The center of the hot spot (brightest area of light beam) should be centered where the two lines intersect.

   b. Adjust headlamp alignment if necessary.

Headlamp Adjustment

1. See Headlamp Adjustment: FXDFSE. Loosen horizontal adjusting bolt (2) to adjust headlamp beam side to side. Tighten bolt to 25-30 ft-lbs (33.9-40.7 Nm).

2. Loosen nut on vertical adjusting bolt (1) to adjust headlamp beam up or down. Tighten bolt to 25-30 ft-lbs (33.9-40.7 Nm).

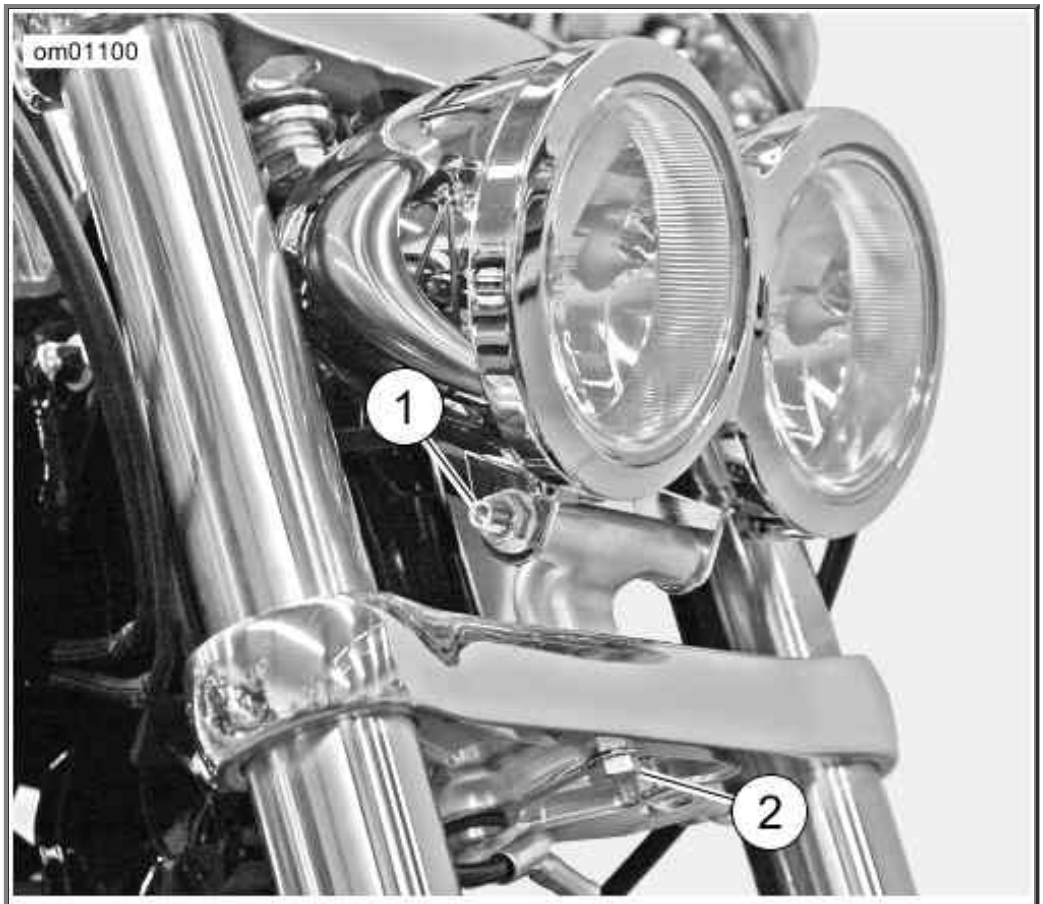

1. Vertical adjusting bolt
2. Horizontal adjusting bolt

Headlamp Adjustment: FXDFSE

Turn Signal Bulb Replacement: Bullet Style

1. See Lens Cap Notch. Insert a coin or the blade of a small screwdriver into the notch at the bottom of the lens cap. Carefully twist until the lens cap pops out of the lamp housing.
2. Push bulb in and rotate counterclockwise. Pull bulb from socket.
3. Inspect condition of electrical contacts in socket. If necessary, clean with a small wire brush and electrical contact cleaner.
4. Coat base of **new** bulb with ELECTRICAL CONTACT GREASE (Part No. 99861-90).
5. Align pins on bulb with pin guides in bulb socket. Push **new** bulb in and turn clockwise to lock in place.
6. Snap lens cap back into the lamp holder. Rotate lens to position notch at bottom of lamp.

⚠WARNING

Be sure that all lights and switches operate properly before operating motorcycle. Low visibility of rider can result in death or serious injury. (00316a)

7. Test turn signal operation.

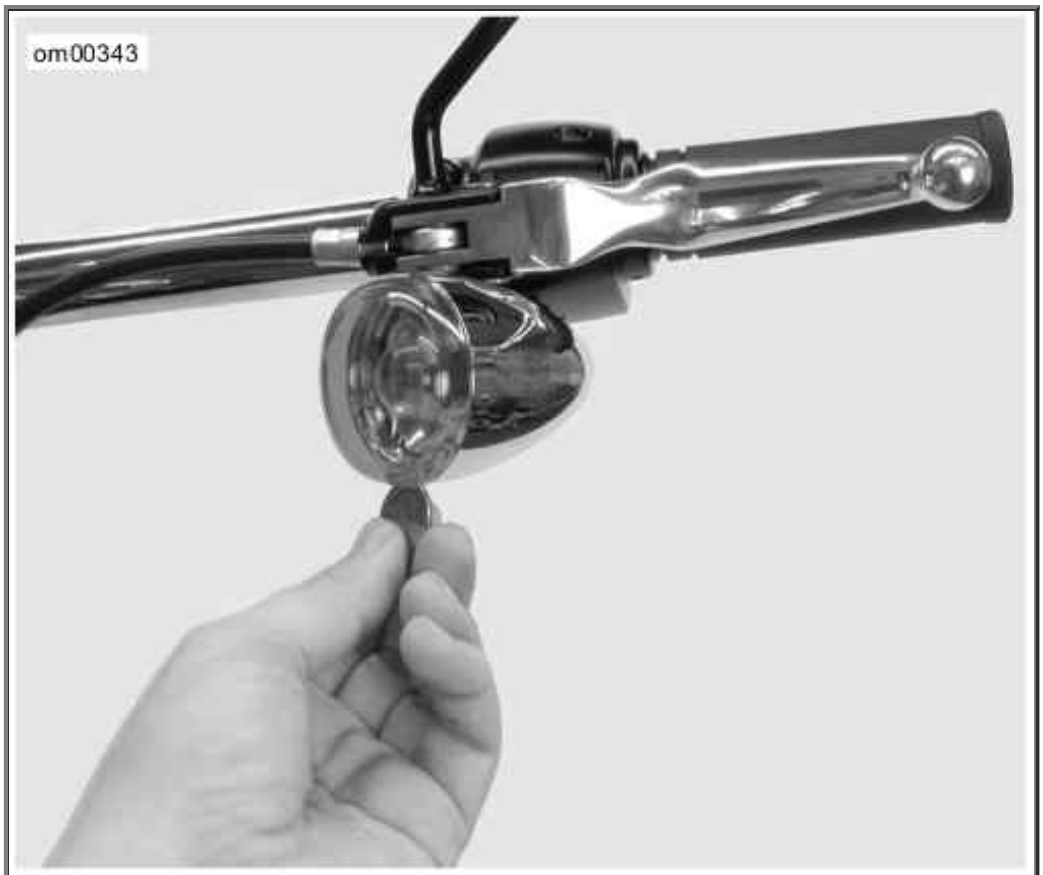

Lens Cap Notch

LED Tail Lamp

The tail lamp contains no replaceable bulbs. Refer to the service manual for removal and installation of the tail lamp.

Alternator/Voltage Regulator

Charging Rate

The alternator output is controlled and changed to direct current by the voltage regulator.

- The voltage regulator increases charging rate when battery is low or lamps are lit.
- The voltage regulator decreases charging rate when battery charge is up.

CAUTION

It is possible to overload your motorcycle's charging system by adding too many electrical accessories. If your combined electrical accessories operating at any one time consume more electrical current than your vehicle's charging system can produce, the electrical consumption can discharge the battery and cause vehicle electrical system damage. See a Harley-Davidson dealer for advice about the amount of current consumed by additional electrical accessories, or for necessary wiring changes. (00211b)

A battery voltage LED in the instruments will light up when voltage is either too low or too high.

NOTES:

- *This unit requires no interval attention. If any electrical system trouble is experienced that might be traceable to the alternator or voltage regulator, the motorcycle should be taken to a Harley-Davidson dealer who has the necessary electrical testing equipment to give the required attention.*
- *For model specific information regarding the voltage regulator, refer to the appropriate Service Manual or see a Harley-Davidson dealer.*

Battery: General

Type

Your motorcycle uses a permanently sealed, maintenance-free, lead/calcium and sulfuric acid battery. All batteries are shipped precharged and ready to be put into service. Do not attempt to open the battery for any reason.

Antidotes for Battery Acid

CONTACT	TREATMENT
External	Flush with water.
Internal	Drink large quantities of milk or water, followed by milk of magnesia, vegetable oil or beaten eggs. Get immediate medical attention.
Eyes	Flush with water. Get immediate medical attention.

⚠WARNING

Batteries contain sulfuric acid, which could cause severe burns to eyes and skin. Wear a protective face shield, rubberized gloves and protective clothing when working with batteries. KEEP BATTERIES AWAY FROM CHILDREN. (00063a)

⚠WARNING

Explosive hydrogen gas, which escapes during charging, could cause death or serious injury. Charge battery in a well-ventilated area. Keep open flames, electrical sparks and smoking materials away from battery at all times. KEEP BATTERIES AWAY FROM CHILDREN. (00065a)

⚠WARNING

Batteries, battery posts, terminals and related accessories

contain lead and lead compounds, and other chemicals known to the State of California to cause cancer, and birth defects or other reproductive harm. Wash hands after handling. (00019e)

⚠WARNING

Never remove warning label attached to top of battery. Failure to read and understand all precautions contained in warning, could result in death or serious injury. (00064a)

1. Contents are corrosive
2. Wear safety glasses
3. Contents are explosive
4. Keep flames away
5. Read instructions
6. Keep away from children

Battery Warning Label

Battery Warning Label

Voltmeter Test

Refer to Voltmeter Test. The voltmeter test provides a general indicator of battery condition. Check the voltage of the battery to verify that it is in a 100 percent fully-charged condition. If the open circuit (disconnected) voltage reading is below 12.6 V, charge the battery and then re-check the voltage after the battery has set for one to two hours.

Voltmeter Test

READING IN VOLTS	PERCENT OF CHARGE
12.7	100
12.6	75
12.3	50
12.0	25
11.8	0

Cleaning and Inspection

Battery top must be clean and dry. Dirt and electrolyte on top of the battery can cause battery to self-discharge.

1. Clean battery top.

2. Clean cable connectors and battery terminals using a wire brush or fine grit sandpaper to remove any oxidation.

3. Inspect and clean the battery screws, clamps and cables. Check for breakage, loose connections and corrosion.

4. Check the battery posts for melting or damage caused by overtightening.

5. Inspect the battery for discoloration, a raised top or a warped or distorted case. This might indicate that the battery has been frozen, overheated or overcharged.

6. Inspect the battery case for cracks or leaks.

Charging

Never charge a battery without first reviewing the instructions for the charger being used. In addition to the manufacturer's instructions, follow these general safety precautions.

Charge the battery if any of the following conditions exist:

- Vehicle lamps appear dim.
- Electric starter sounds weak.
- Battery has not been used for an extended period of time.

⚠WARNING

Explosive hydrogen gas, which escapes during charging, could cause death or serious injury. Charge battery in a well-ventilated area. Keep open flames, electrical sparks and smoking materials away from battery at all times. KEEP BATTERIES AWAY FROM CHILDREN. (00065a)

⚠WARNING

Batteries contain sulfuric acid, which could cause severe burns to eyes and skin. Wear a protective face shield, rubberized gloves and protective clothing when working with batteries. KEEP BATTERIES AWAY FROM CHILDREN. (00063a)

1. Perform a voltmeter test to determine the state of charge. If battery needs to be charged, proceed to the next step.

2. Place the battery on a level surface.

⚠WARNING

Unplug or turn OFF battery charger before connecting charger cables to battery. Connecting cables with charger ON can cause a spark and battery explosion, which could result in death or serious injury. (00066a)

⚠WARNING

Connect positive (+) battery cable first. If positive (+) cable should contact ground with negative (-) cable connected, the resulting sparks can cause a battery explosion, which could result in death or serious injury. (00068a)

⚠WARNING

Disconnect negative (-) battery cable first. If positive (+) cable should contact ground with negative (-) cable connected, the resulting sparks can cause a battery explosion, which could result in death or serious injury. (00049a)

CAUTION

Do not reverse the charger connections described in the following steps or the charging system of the motorcycle could be damaged. (00214a)

NOTES:

- *The figures in 19 Amp-Hour Battery Charging Rates/Times (Approximate) show typical charging times. Charge times may vary. When using automatic chargers, allow the charger to determine when charging is complete.*
- *Do not use chargers with excessively high voltage designed for flooded batteries or excessively high current designed for much larger batteries. Charging should be limited to no more than 5 amps at no more than 14.6 volts.*

3. Connect the red battery charger lead to positive (+) terminal of the battery.

4. Connect the black battery charger lead to negative (-) terminal of the battery.

   NOTE:

   If the battery is still in the vehicle, connect the negative lead to the chassis ground. Make sure that the ignition and all electrical accessories are turned off.

5. Step away from the battery and turn on the charger.

⚠WARNING

Unplug or turn OFF battery charger before disconnecting charger cables from battery. Disconnecting clamps with charger ON can cause a spark and battery explosion, which could result in death or serious injury. (00067a)

6. After the battery is fully charged, turn OFF the charger and disconnect the black battery charger lead to the negative (-) terminal of the battery.

7. Disconnect the red battery charger lead to the positive (+) terminal of the battery.

8. Mark the charging date on the battery.

19 Amp-Hour Battery Charging Rates/Times (Approximate)

READING (VOLTS)	PERCENT OF CHARGE	5 AMP CHARGER	2 AMP CHARGER	1.5 AMP CHARGER	0.75 AMP CHARGER
12.7	100	-	-	-	-
12.6	75	2 hours	3 hours 24 minutes	4 hours 12 minutes	7 hours 18 minutes
12.3	50	2 hours 54 minutes	5 hours 48 minutes	7 hours 18 minutes	13 hours 42 minutes
12.0	25	3 hours 54 minutes	8 hours 6 minutes	10 hours 30 minutes	20 hours
11.8	0	4 hours 48 minutes	10 hours 30 minutes	13 hours 42 minutes	26 hours 18 minutes

Storage

If the motorcycle will not be operated for several months, such as during the winter season, remove the battery from the motorcycle and fully charge.

If the motorcycle is to be stored with the battery installed, it will be necessary to connect a battery tender to maintain charge. See an authorized dealer for more information.

A battery that is removed from the vehicle is affected by self-discharge. A battery that is stored in the vehicle is affected by both self-discharge and, more significantly, parasitic loads. Parasitic loads occur from things like diode leakage and maintaining computer memory with the vehicle off.

- Batteries self-discharge at a faster rate at higher ambient temperatures.
- To reduce the self-discharge rate, store battery in a cool, dry place.
- Charge the battery once per month if stored in the vehicle.
- Charge the battery every three months if stored out of the vehicle.

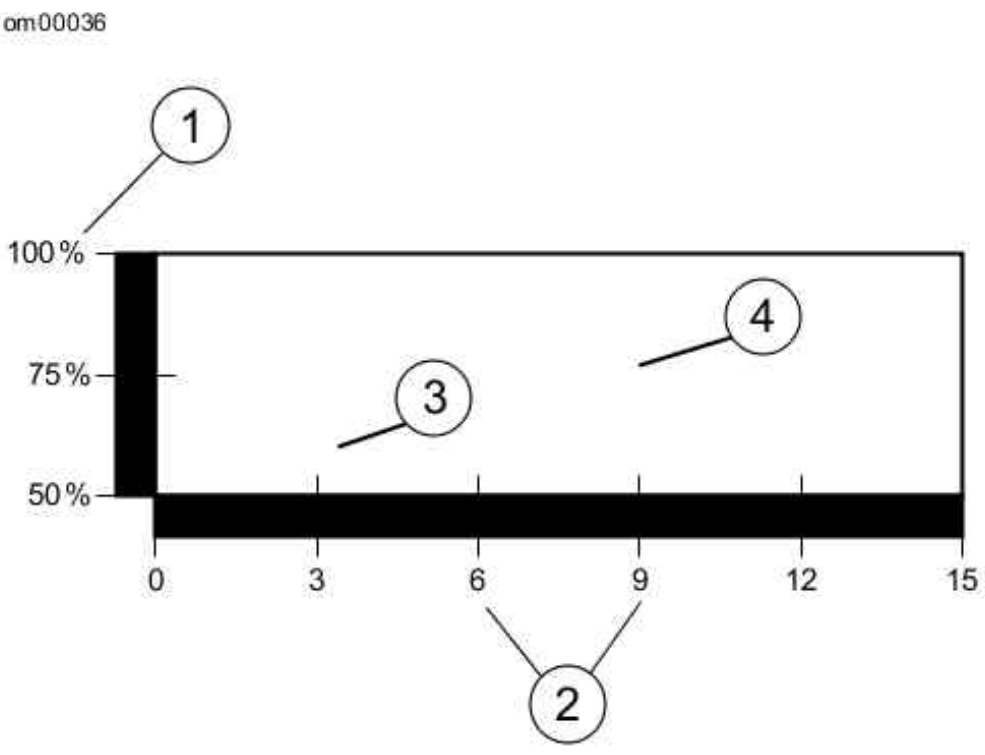

1. Capacity
2. Months of non-use
3. Measured at 105 °F (40 °C)
4. Measured at 77 °F (25 °C)

Effective Rate of Temperature on Battery Self-discharging Rate

Battery

Disconnection and Removal

Before you can inspect or disconnect your battery you must read the section containing information about seat removal.

⚠WARNING

Disconnect negative (-) battery cable first. If positive (+) cable should contact ground with negative (-) cable connected, the resulting sparks can cause a battery explosion, which could result in death or serious injury. (00049a)

1. Remove the seat. See Seat and Pillion.

   NOTE:

   The battery is located below the seat on the right side of the motorcycle.

2. Remove the fastener below the battery cover.

3. Remove battery cover.
4. If equipped with security system siren, turn the ignition switch ON with the hands-free fob present to disarm the security system.
5. Remove the negative (-) cable (black) from battery negative (-) terminal.
6. Remove battery positive cable (red) from battery positive (+) terminal.
7. Remove the rubber hold-down strap and slide the battery out of the battery compartment.

Installation and Connection

CAUTION

Connect the cables to the correct battery terminals. Failure to do so could result in damage to the motorcycle electrical system. (00215a)

⚠WARNING

Connect positive (+) battery cable first. If positive (+) cable should contact ground with negative (-) cable connected, the resulting sparks can cause a battery explosion, which could result in death or serious injury. (00068a)

⚠WARNING

Do not allow positive (+) battery cable to contact ground with negative (-) cable connected. Resulting sparks can cause a battery explosion, which could result in death or serious injury. (00069a)

1. Place the fully-charged battery into the battery compartment.

CAUTION

Do not over-tighten bolts on battery terminals. Use recommended torque values. Over-tightening battery terminal bolts could result in damage to battery terminals. (00216a)

2. Insert bolt through battery positive cable (+) (red) into threaded hole of battery positive (+) terminal.
3. Tighten bolt to 60-70 in-lb (6.8-7.9 Nm).
4. Insert bolt through battery negative cable (-) (black) into threaded hole of battery negative (-) terminal.
5. Tighten bolt to 60-70 in-lb (6.8-7.9 Nm).

CAUTION

Keep battery clean and lightly coat terminals with petroleum jelly to prevent corrosion. Failure to do so could result in damage to battery terminals. (00217a)

6. Apply a light coat of petroleum jelly or corrosion-retardant material to both battery terminals.
7. Install battery side cover.
8. Install lower fastener. Tighten to 20-40 in-lb (2.26-4.52 Nm).

⚠WARNING

After installing seat, pull upward on seat to be sure it is locked in position. While riding, a loose seat can shift causing loss of control, which could result in death or serious injury. (00070b)

9. Install the seat.

Jump Starting

Jump-starting a motorcycle is typically not recommended. However, there may be circumstances when it is necessary to do so. If a jump-start is necessary, use the following procedure.

⚠WARNING

Be sure jumper cables touch only appropriate battery terminals or ground. Allowing jumper cables to touch each other can result in sparks and a battery explosion, which could result in death or serious injury. (00072a)

⚠WARNING

Explosive hydrogen gas, which escapes during charging, could cause death or serious injury. Charge battery in a well-ventilated area. Keep open flames, electrical sparks and smoking materials away from battery at all times. KEEP BATTERIES AWAY FROM CHILDREN. (00065a)

CAUTION

Be sure both vehicles have the same battery voltage when jump starting. Connecting vehicles with different system voltages can result in vehicle damage. (00220c)

NOTES:

- *This procedure presumes the BOOSTER battery is in another vehicle. DO NOT jump start from a running booster vehicle. The high output charging systems on some vehicles can*

damage the electrical components on the motorcycle.
- *Make sure the motorcycle and the BOOSTER vehicle are not touching one another.*

1. Turn off all unnecessary lamps and accessories.

Positive Cable

2. See Jump Start Cable Connections. Connect one end of a jumper cable to the DISCHARGED battery positive (+) terminal (1).
3. Connect the other end of the same cable to the BOOSTER battery positive (+) terminal (2).

Negative Cable

⚠WARNING

Do not connect negative (-) cable to or near the discharged battery negative (-) terminal. Doing so could cause a spark and explosion, which could result in death or serious injury. (00073a)

4. Connect one end of a jumper cable to the BOOSTER battery negative (-) terminal (3).

CAUTION

Do not connect the negative (-) cable to painted or chrome parts. Doing so could result in discoloration at the attachment point. (00221a)

5. Connect other end of the same cable (4) to a safe ground, (away from the DISCHARGED battery).
6. Start motorcycle.
7. Disconnect cables in reverse order of Steps 2, 3, 4, 5; that is: Steps 5, 4, 3, 2.

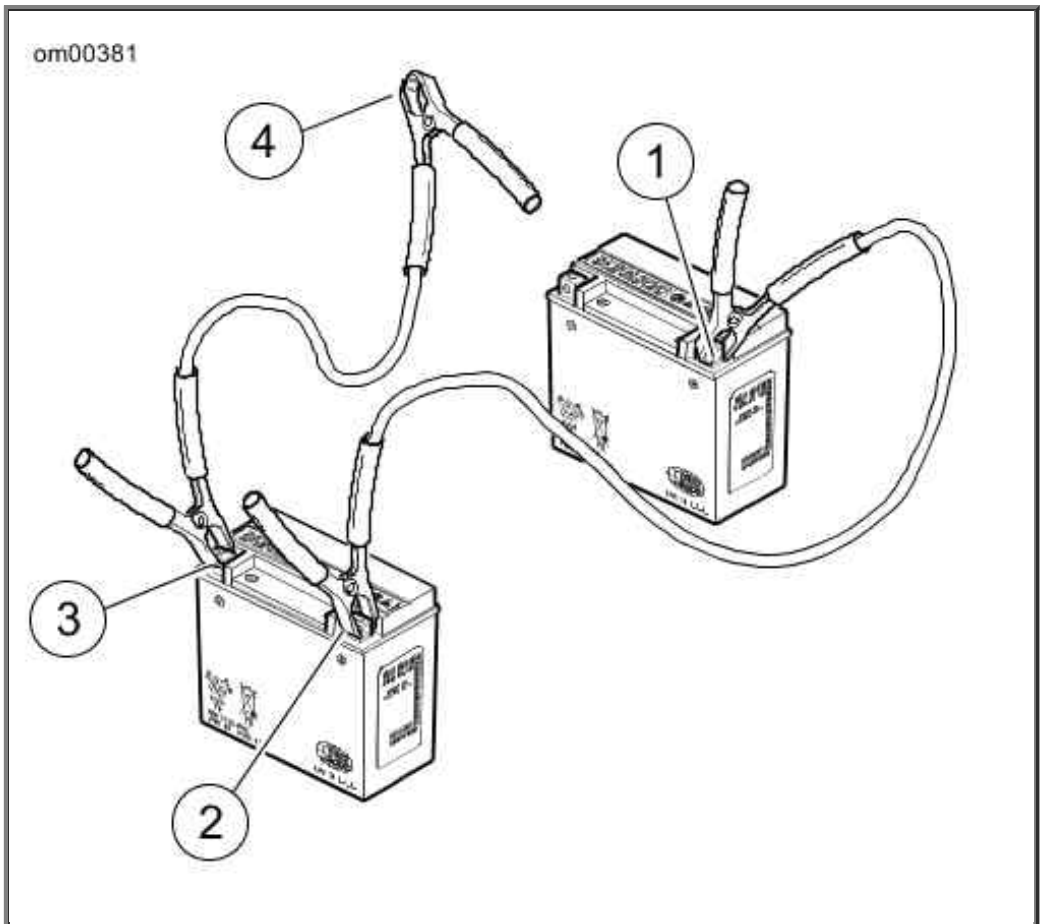

1. Discharged battery positive (+) terminal
2. Booster battery positive (+) terminal
3. Booster battery negative (-) terminal
4. Ground

Jump Start Cable Connections

Fuses and Relays

Fuses

See Fuse Block. The fuse block is under the left side cover, behind the electrical panel cover. The block contains replaceable fuses.

NOTE:

See Fuse Block. Spare fuses are inserted into slots 7 and 8 in the fuse block. Automotive type ATO fuses are used for replacements.

Fuse Replacement

1. Place the ignition/headlamp key switch in the OFF position.
2. Gently pull left side cover from frame. (No tools are required for this step.)
3. See Fuse Block. Remove the fuse and inspect the element.
4. Install new fuse if necessary.

CAUTION

Always use replacement fuses that are of the correct type and amperage rating. Use of incorrect fuses can result in damage to electrical systems. (00222a)

5. Align studs in side cover with grommets in frame and firmly push the side cover into place.

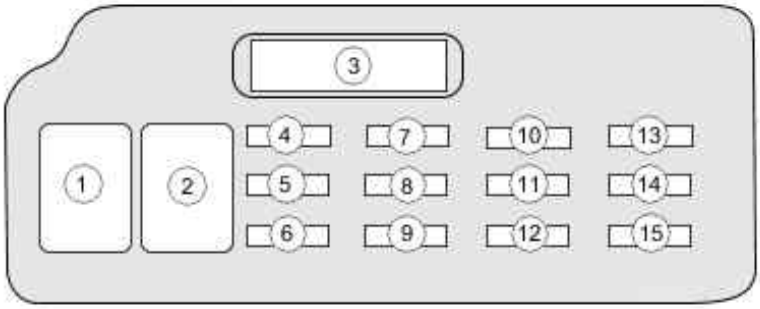

1. Starter relay
2. System relay
3. Main fuse (40 amp)
4. ECM (15 amp)
5. Fuel pump (15 amp)
6. Blank (HDI: Engine Control Fuse)
7. Spare (15 amp)
8. Spare (15 amp)
9. Customer accessory (15 amp)
10. P&A ignition (2 amp max)
11. Battery (15 amp)
12. Accessories (15 amp)
13. Instruments (15 amp)
14. Ignition (15 amp)
15. Lamps (15 amp)

Fuse Block

Replacing the Main Fuse

See Main Fuse. All Dyna models have a main fuse to protect the motorcycle wiring. This 40-amp main fuse provides main battery power to the motorcycle. It is located in the fuse holder behind the motorcycle's left side cover.

1. Gently pull left side cover from frame. (No tools are required for this step.)
2. If equipped with security system siren, turn the ignition switch ON with the hands-free fob present to disarm the security system.
3. Grasp and pull the main fuse straight out of the fuse holder.
4. Insert the prongs of the **new** main fuse in the fuse holder slots.
5. Align studs in side cover with grommets in frame and firmly push the side cover into place.

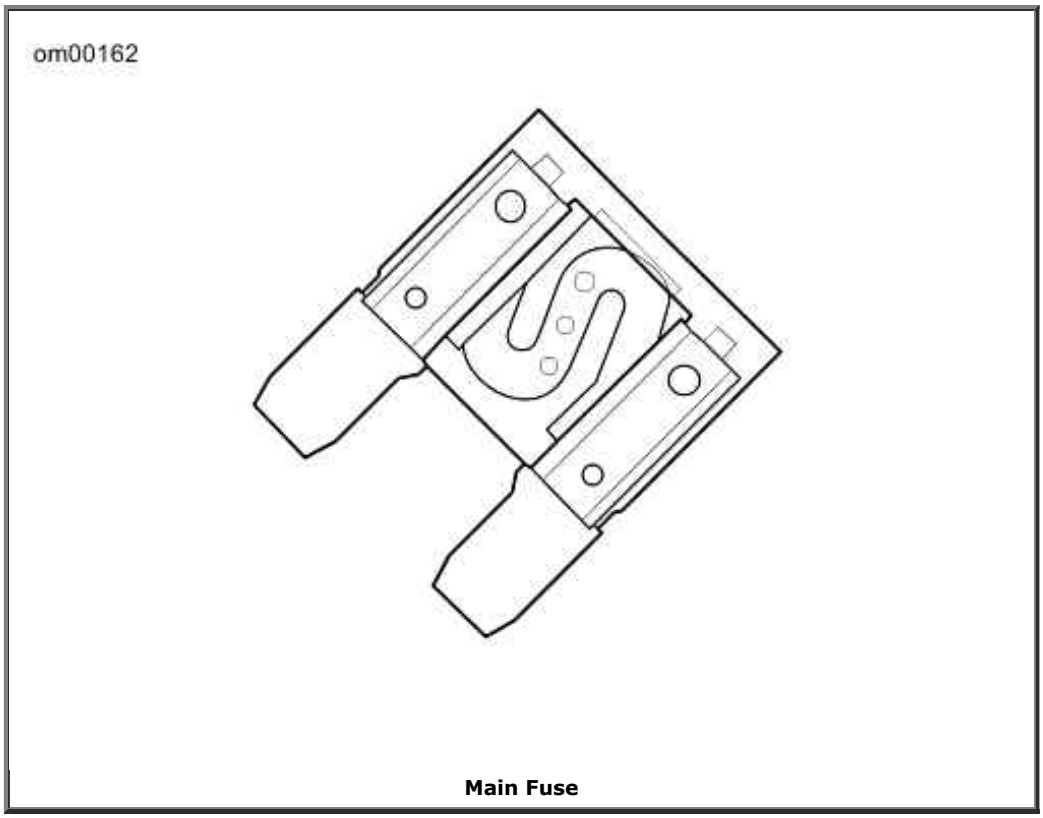

Main Fuse

Seat and Pillion

The seat can be installed with or without the pillion.

Remove Seat: Seat Only Installation

1. See Seat and Pillion. Remove thumbscrew and flat washer securing the seat to the fender.
2. Slide seat toward the rear of the motorcycle and remove seat.

Install Seat: Seat Only Installation

NOTE:

There is a tab at the front of the seat that slides under the rear fuel tank mount to secure seat.

1. Put seat on frame backbone.
2. Slide seat toward front of motorcycle until the tab locks under the fuel tank mount.
3. Install thumbscrew and flat washer. Tighten securely.

⚠WARNING

After installing seat, pull upward on seat to be sure it is locked in position. While riding, a loose seat can shift causing loss of control, which could result in death or serious injury. (00070b)

4. Pull up on seat to verify that it is properly secured.

Remove Seat and Pillion

1. Remove thumbscrew.
2. Slide grab strap off the pillion and slide pillion forward and remove from shoulder bolt.
3. See Seat and Pillion. Remove the shoulder bolt securing the seat and grab strap to the fender.
4. Remove grab strap and top hat washer.
5. Slide seat toward the rear of the motorcycle and remove seat.

Install Seat and Pillion

1. Remove the chrome nut cap from the rear mounting hole.
2. See Seat and Pillion. Insert the smaller diameter side of the top hat washer into the seat bracket mounting hole.
3. Put seat on frame backbone.

   NOTE:

   There is a tab at the front of the seat that slides under the rear fuel tank mount to secure seat.

4. Slide seat toward front of motorcycle until the tab locks under the fuel tank mount.
5. Insert the shoulder bolt through the grab strap. aligned with the top hat washer in the mounting tab of the seat.
6. Install shoulder bolt into the top hat washer and seat mounting bracket. Be sure the top hat washer or grab strap is not pinched as the shoulder bolt is tightened. Tighten to 8-13 ft-lb (11-18 Nm).
7. Slide the grab strap between the lower skirt and the top cushion of the pillion. Align the slot under the pillion with the head of the shoulder bolt.
8. Slide pillion back until firmly secured on the shoulder bolt.
9. Install thumbscrew. Tighten securely.

⚠WARNING

After installing seat, pull upward on seat to be sure it is locked in position. While riding, a loose seat can shift causing loss of control, which could result in death or serious injury. (00070b)

10. Pull up on seat to verify that it is properly secured.

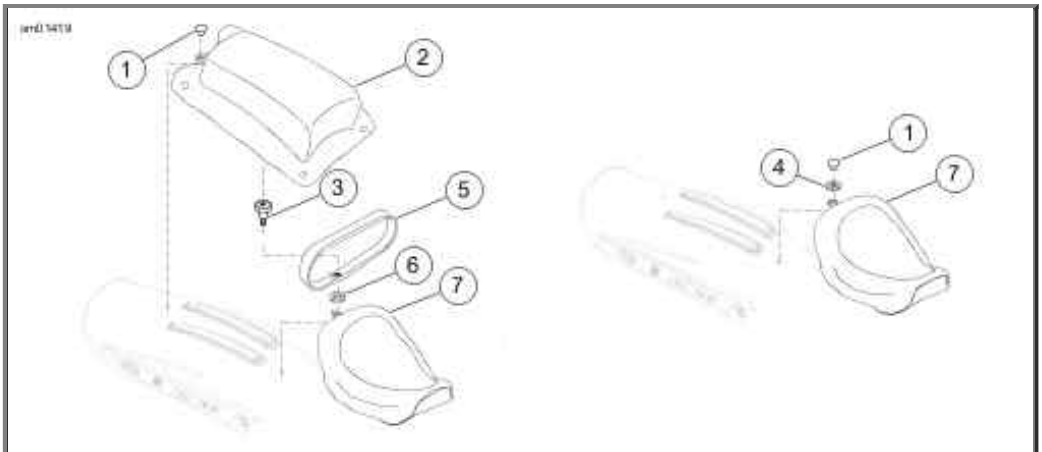

1. Thumbscrew
2. Pillion
3. Shoulder bolt
4. Flat Washer
5. Grab strap
6. Top hat washer
7. Seat

Seat and Pillion

Motorcycle Storage

Placing Motorcycle in Storage

CAUTION

Proper storage is important for the trouble-free operation of your motorcycle. See your Owner's Manual for storage recommendations or see a Harley-Davidson dealer. Improper storage procedures can lead to equipment damage. (00046a)

If the motorcycle will not be operated for several months, such as during the winter season, there are several tasks which should be performed. These steps will protect parts against corrosion, preserve the battery and prevent the build-up of gum and varnish in the fuel system.

⚠WARNING

Do not store motorcycle with gasoline in tank within the home or garage where open flames, pilot lights, sparks or electric motors are present. Gasoline is extremely flammable and highly explosive, which could result in death or serious injury. (00003a)

NOTE:

Make a list of everything you do and fasten it to a handgrip. When you take the motorcycle out of storage, this list will be your reference/checklist to get your motorcycle in operating condition.

1. Fill fuel tank and add a gasoline stabilizer. Use one of the commercially available gasoline stabilizers and follow the manufacturer's instructions.

2. Warm motorcycle to operating temperature. Change oil and turn engine over to circulate the new oil.

3. Check and adjust belt if necessary.

4. Check tire inflation. Adjust to proper inflation pressure.

5. To protect the vehicle's body panels, engine, chassis and wheels from corrosion, follow the cosmetic care procedures described in the Care and Cleaning section of this owner's manual prior to storage.

6. Prepare battery for winter storage. See Battery: General.

⚠WARNING

Explosive hydrogen gas, which escapes during charging, could cause death or serious injury. Charge battery in a well-ventilated area. Keep open flames, electrical sparks and smoking materials away from battery at all times. KEEP BATTERIES AWAY FROM CHILDREN. (00065a)

NOTE:

- *If the motorcycle will be stored with the security system armed, connect a Battery Tender to maintain battery charge.*
- *If the motorcycle will be stored with the security system disarmed, turn ignition switch to ON while the hands-free fob is present. This will prevent the optional siren from sounding. Disconnect the negative battery cable and prepare battery for storage. See Battery: General.*

7. If motorcycle is to be covered, use a material such as light canvas that will breathe. Plastic materials that do not breathe promote the formation of condensation.

Removing Motorcycle From Storage

⚠WARNING

The clutch failing to disengage can cause loss of control, which could result in death or serious injury. Prior to starting after extended periods of storage, place transmission in gear and push vehicle back and forth several times to assure proper clutch disengagement. (00075a)

1. See Battery: General for proper battery care. Charge and install the battery.

2. Remove and inspect the spark plugs. Replace if necessary.

3. Clean the air cleaner element.

4. Start the engine and run until it reaches normal operating temperature. Turn off engine.

5. Check amount of oil in the oil tank.
6. Check the transmission lubricant level.
7. Check controls to be sure they are operating properly. Operate the front and rear brakes, throttle, clutch and shifter.
8. Check steering for smoothness by turning the handlebars through the full operating range.

⚠WARNING

Be sure tires are properly inflated, balanced and have adequate tread. Inspect your tires regularly and see a Harley-Davidson dealer for replacements. Riding with excessively worn, unbalanced or under-inflated tires can adversely affect stability and handling, which could result in death or serious injury. (00014a)

9. Check tire pressure. Incorrect pressure will result in poor riding characteristics and can affect handling and stability.
10. Check all electrical equipment and switches including the stop lamp, turn signals and horn for proper operation.
11. Check for any fuel, oil or brake fluid leaks.

CAUTION

Turn engine over a few times to be sure there is no oil in the crankcase and that all oil has been pumped back into the oil tank. Stop engine and re-check oil level. Failure to do so can result in engine damage. (00071a)

Care and Cleaning

Cleaning and General Care

Clean and protect the cosmetic surfaces on your motorcycle as often as possible to inhibit rust and corrosion. After the motorcycle is cleaned, polish and seal the motorcycle to create a sacrificial barrier of protection against the weather and harsh substances.

Refer to Recommended Cleaning and Care Products and Recommended Surface Care Products. Harley-Davidson cleaning products are tested extensively for use on vehicle surfaces and are formulated to be compatible with one another. See a Harley-Davidson dealer to purchase recommended cleaning products.

NOTES:

Use recommended surface care products. Paper towels, terry cloths, cloth diapers or other materials with nylon fibers can create fine scratches to surfaces.

⚠WARNING

Observe warnings on labels of cleaning compounds. Failure to follow warnings could result in death or serious injury. (00076a)

⚠WARNING

Do not wash brake discs with cleaners containing chlorine or silicone. Cleaners containing chlorine and silicone can impair brake function, which could result in death or serious injury. (00077a)

CAUTION

Do not use a pressure washer to clean motorcycle. Using a pressure washer can result in equipment damage. (00489c)

CAUTION

Use of abrasive products or powered buffing equipment will cause permanent cosmetic damage to body panels. Use only recommended products and techniques outlined in this manual to avoid damaging body panels. (00245b)

Recommended Cleaning and Care Products

PRODUCT	PART NUMBER	PURPOSE	FRAME	BODY PANELS	WHEELS	DENIM FINISH	OTHER
H-D Sunwash Cleaner Concentrate	94659-98	General cleaning and washing of all surfaces. Prevents hard water spots and rinses clean in the sun.	Yes	Yes	Yes	Yes	
H-D Bug Remover	94657-98	Removes bugs from metal, plastic or painted surfaces.	Yes	Yes	Yes	Yes	
Harley-Gloss	94627-98	Produces high gloss with UV protection. Allows chrome to breathe, unlike wax. Good for	Yes	Yes	Yes	Yes	

		windshields.					
Harley Spray Cleaner and Polish	99817-99A	Aerosol spot cleaner and detailer. Degreases and reduces static attraction to dust.	Yes	Yes	Yes	No	
Wheel and Tire Cleaner	94658-98	Cleans wheels, tires, whitewalls and black-coated exhaust pipes and mufflers. Do not use on frames or anodized parts.	No	No	Yes	No	
Harley Bright Chrome Cleaner	94683-99	Shines chrome-plated surfaces and cleans brushed aluminum or stainless steel surfaces.	As applicable				
Harley Bright Metal Polish	99725-89	Polishes non-clear coated polished aluminum or polished stainless steel surfaces.	As applicable				
Harley Glaze Polish & Sealant	99701-84	Polishes windshields, painted surfaces and chrome.	Yes	Yes	As applicable	No	
H-D Swirl & Scratch Treatment	94655-98	Removes fine scratches and swirls.	Yes	Yes	No	No	
H-D Spray Cleaner & Polish	99817-99A	Waterless quick cleaner and detailer.	Yes	Yes	Yes	No	
H-D Black Tire Sidewall Protectant	94628-05	Restores luster to black tire sidewalls.	No	No	No	No	Tires
H-D Preserve Bare Aluminum Protectant	99845-07	Corrosion control for bare aluminum surfaces.	As applicable				

H-D Windshield Water Repellent Treatment	99841-01	Allows water to bead and dissipate from the windshield.	No	No	No	No	Windshield
H-D Leather Dressing	98261-91V	Weatherproofs and preserves leather products.	No	No	No	No	Leather goods
S100 Total Cycle Cleaner	99760-85T	Cleans painted surfaces, chrome and aluminum. Rinse completely while surfaces are wet. Do not allow to dry.	Yes	Yes	Yes	No	
Grease-cutting dishwashing detergent	Not applicable	Cleans Denim finish. Dilute per manufacturer's instructions.	No	No	No	Yes	
Ammonia-based glass cleaner	Not applicable	Spot cleans Denim finish. Do NOT use on windshields.	No	No	No	Yes	
NOVUS 1 Cleaner/Protectant	99837-94T	Cleans windshields, tail lamps and all plastics. Resists fingerprints, fogging, smears and repels dust.	No	No	No	No	Windshield
NOVUS 2 Scratch Remover	99836-94T	Minor scratch remover for windshields and plastics. Apply after NOVUS 1.	No	No	No	No	Windshield

Recommended Surface Care Products

PRODUCT	PART NO.	DESCRIPTION
Wash Mitt	94760-99	Absorbant wool-blended washing mitten.

Soft Detailing Pad	94790-01	Soft pad for removing bugs and debris without scratching the surface finish.
Softstrips	94680-99	For cylindrical surfaces such as handlebars, forks, pushrod covers and spokes.
Softcloth	94656-98	Non-absorbant cloth for applying and buffing Swirl & Scratch treatment and Harley Glaze to painted surfaces or chrome.
Soft Drying Towel	94791-01	Extra-absorbant, non-streaking synthetic towel for drying. Dampen towel and wring out before using for greatest absorbancy.
Wheel & Spoke Brush	43078-99	Cone-shaped scrub brush for wheels.
Microfiber Detailing cloth	94663-02	Highly absorbant detailing cloth for polishing and sealing. Contains no nylon fibers.
S100 Detailing Swabs	99780-04	Large cotton swabs for cleaning crevices and detailed surfaces.

Leather Care

NOTES:

Many Harley-Davidson accessories and seats are made of either treated or untreated leather or have leather inserts. Natural materials age differently and require different care than man-made materials. Seat covers and panels made of leather will gain "character", such as wrinkles, with age. Leather is porous and organic and each leather product will settle into its own distinct form with use. Your leather product will mature into its own custom shape and style from the sun, rain and time. This maturing is natural and will enhance the custom quality of your Harley-Davidson motorcycle.

Leather surfaces are not designed for long-term exposure to inclement weather and should be protected with a Harley-Davidson Seat Rain Cover or Motorcycle Storage Cover (sold separately). See your Harley-Davidson dealer.

Leather must be periodically cleaned and treated to maintain its appearance and extend its life. Clean and treat leather once a season or more frequently under adverse conditions.

CAUTION

Do not use bleach or detergents containing bleach on saddlebags, seats, tank panels or painted surfaces. Doing so can result in equipment damage. (00229a)

- Do not use ordinary soap to clean leather or fur. It could dry or remove the oils from the leather.
- Use ONLY a good quality saddle soap to clean leather. Be sure you rinse saddle soap off thoroughly before treating leather.
- Never try to dry leather quickly, using artificial means. Always let leather dry naturally, at room temperature. Always allow leather to dry completely before using.

1. Vacuum or blow dust off.

2. Thoroughly clean leather with a good quality saddle soap, following manufacturer's directions. Rinse thoroughly with clean sponge or cloth and water. Allow leather to dry.

3. Once leather is dry, treat with a good quality leather treatment, such as H-D Leather Dressing.

Wheel Care

Regular washing and the use of a corrosion protectant will help the wheels maintain their original appearance. Damage from harsh chemicals, acid based wheel cleaners, brake dust and lack of maintenance can occur. Refer to Recommended Cleaning and Care Products for recommended cleaning products.

NOTES:

- *It is imperative that the wheels are cared for weekly to guard against pitting and corrosion.*
- *Corrosion of these components is not considered to be a defect in materials or workmanship.*
- *Aluminum wheels do not have a protective coating.*

Windshield Care

CAUTION

Polycarbonate windscreens/windshields require proper attention and care to maintain. Failure to maintain polycarbonate properly can result in damage to the windscreen/windshield. (00483d)

- Do not clean in hot sun or high temperature.
- Powdered, abrasive or alkaline cleanser will damage the windscreen/windshield.

CAUTION

Use only Harley-Davidson recommended products on Harley-Davidson windshields. Do not use harsh chemicals or rain sheeting products, which can cause windshield surface damage, such as dulling or hazing. (00231c)

Windshields require special care. Harley-Davidson recommends using Harley Softcloths to clean your windshield. Refer to Recommended Cleaning and Care Products for recommended cleaning products.

NOTES:

- *Use NOVUS 2 SCRATCH REMOVER to remove minor scratches.*
- *To treat the windshield with water repellent use WINDSHIELD WATER REPELLENT TREATMENT.*
- *Covering the windshield with a clean, wet cloth for approximately 15-20 minutes before washing will make dried bug removal easier.*

1. Use mild soap and warm water to wash the windshield.

2. Wipe dry with a clean Soft Drying Towel.

NOTE:

To minimize swirl marks, cleaning should be done when motorcycle is cool and parked in the shade. Faint swirl marks are normal and may be more visible on tinted windshields.

Metal Grind Finish Care

A metal grind process accents your motorcycle. This process requires extra care in that any deep chip or nick needs to be touched up with the appropriate clear coat (see your Harley-Davidson dealer). Failure to perform this maintenance step will result in corrosion to that area of the sheet metal.

See Recommended Cleaning and Care Products for recommended products.

Midnight Pearl Finish

Harley-Davidson Sunwash Cleaner (Part No. 94659-98) should be used for normal washing.

For maximum shine on Midnight Pearl plated surfaces, use Harley Bright Chrome Cleaner (Part No. 94683-99) or Harley Gloss (Part No. 94627-98).

To maximize the durability of the Midnight Pearl finish, it is recommended to use Harley Glaze Polish and Sealant (Part No. 99701-84) or a non-abrasive commercial wax on a regular basis.

Do not use any polish or abrasive cleaners, including Harley Bright Metal Polish and Harley-Davidson Swirl and Scratch Treatment, as they may damage the Midnight Pearl finish.

Washing the Motorcycle

Refer to Recommended Cleaning and Care Products and Recommended Surface Care Products for recommended cleaning and care products.

Preparation

1. Allow motorcycle to cool before rinsing or washing. Spraying water on hot surfaces can leave water spots and mineral deposits.
2. Rinse the motorcycle from the bottom up.
3. To loosen dried bugs or hardened dirt, allow surfaces to soak under a damp towel.

Cleaning the Wheels and Tires

1. Rinse wheel and tire surfaces. Avoid splashing brake dust on chrome or painted parts.
2. Apply Wheel and Tire Cleaner. Allow cleaner to sit for 1 minute.
3. Clean wheel with Soft Detailing Pad or Wheel & Spoke Brush. Use Softstrips to clean wheel spokes.
4. Rinse well.

Washing the Motorcycle

NOTE:

Refer to the appropriate instructions in this section for cleaning leather, Denim (flat) finishes, windshields or other special surfaces.

1. Fill a bucket with clean water.
2. Fill another bucket with water and add H-D Sunwash Cleaner Concentrate, following the directions on the package.
3. Soak the H-D Wash Mitt in the Sunwash solution. Wash all surfaces from the top working down.
4. Use H-D Bug Remover to remove any bugs.
5. Rinse from the bottom up, then rinse from the top down.

Drying the Motorcycle

1. Dry the surfaces of the motorcycle from the top down using a Soft Drying Towel or HOG Blaster.
2. Dampen towel in clean water and wring out the excess. The towel is more absorbent when wet.
3. Wipe across the vehicle surface.
4. Repeat as necessary until surface is completely dry.

Polishing and Sealing

NOTE:

If motorcycle has Denim finish, skip the Polishing and Sealing procedure.

1. Apply Harley Glaze Polish & Sealant with a Softcloth or Microfiber Detailing Cloth, following the instructions on the package.
2. Buff with a Softcloth.

Finishing Tires

1. Apply Harley Black to tires, following the instructions on the package.

Troubleshooting

Troubleshooting: General

⚠WARNING

The troubleshooting section of the Owner's Manual is a guide to diagnose problems. Read the service manual before performing any work. Improper repair and/or maintenance could result in death or serious injury. (00080a)

The following checklist of possible operating troubles and their probable causes will be helpful in keeping your motorcycle in good operating condition. More than one of these conditions may be causing trouble and should be carefully checked.

Engine: Twin Cam 110

Starter Does Not Operate or Does Not Turn Engine Over

---

1. Engine run switch in OFF position.
2. Ignition switch not ON.
3. Discharged battery or loose or corroded connections (solenoid chatters).
4. Clutch lever not squeezed against handlebar or transmission not in neutral.
5. Jiffy stand not in retracted position (required for international models).
6. Blown fuse.

Engine Turns Over but Does Not Start

---

1. Fuel tank empty.
2. Discharged battery or loose or damaged battery terminal connections.
3. Fouled spark plugs.
4. Spark plug cable connections loose or in bad condition and shorting.
5. Loose or corroded wire or cable connection(s) at coil or battery.
6. Fuel pump inoperative.
7. Blown fuse.

Starts Hard

---

1. Automatic Compression Release (ACR) not functioning properly.
2. Spark plugs in bad condition, have improper gap, or are partially fouled.
3. Spark plug cables in bad condition and leaking.

4. Battery nearly discharged.
5. Loose wire or cable connection(s) at one of the battery terminals or at coil.
6. Engine oil too heavy (winter operation).
7. Fuel tank vent plugged or fuel line closed off, restricting fuel flow.
8. Water or dirt in fuel system.
9. Fuel pump inoperative.

Starts but Runs Irregularly or Misses

---

1. Spark plugs in bad condition or partially fouled.
2. Spark plug cables in bad condition and leaking.
3. Spark plug gap too close or too wide.
4. Battery nearly discharged.
5. Damaged wire or loose connection at battery terminals or coils.
6. Intermittent short circuit due to damaged wire insulation.
7. Water or dirt in fuel system or filter.
8. Fuel vent system plugged. See dealer.
9. One or more injectors fouled.

A Spark Plug Fouls Repeatedly

---

1. Incorrect spark plug.

Pre-Ignition or Detonation (Knocks or Pings)

---

1. Incorrect fuel.
2. Incorrect spark plug for the kind of service.

Overheats

---

1. Insufficient oil supply or oil not circulating.
2. Heavy carbon deposit from lugging engine. See dealer.
3. Insufficient air flow over cylinder heads during extended periods of idling or parade duty.

Excessive Vibration

---

1. Rear fork pivot shaft nuts loose. See dealer.
2. Front engine mounting bolts loose. See dealer.
3. Engine to transmission mounting bolts loose. See dealer.
4. Damaged frame. See dealer.
5. Front chain or links tight as a result of insufficient lubrication or belt badly worn.
6. Wheels and/or tires damaged. See dealer.
7. Vehicle not properly aligned. See dealer.

Electrical System

Alternator Does Not Charge

1. Regulator not grounded. See dealer.
2. Engine ground wire loose or damaged. See dealer.
3. Loose or damaged wires in charging circuit. See dealer.

Alternator Charge Rate is Below Normal

1. Weak battery.
2. Excessive use of add-on accessories.
3. Loose or corroded connections.
4. Extensive periods of idling or low speed riding.

Transmission

Transmission Shifts Hard

1. Bent shifter rod. See dealer.

Transmission Jumps Out of Gear

1. Worn shifter dogs in transmission. See dealer.

Clutch Slips

1. Worn friction discs. See dealer.

2. Insufficient clutch spring tension. See dealer.

Clutch Drags or Does Not Release

1. Primary chaincase overfilled.
2. Clutch discs warped. See dealer.

Clutch Chatters

1. Friction discs or steel discs worn or warped. See dealer.

Brakes

Brakes Do Not Hold Normally

1. Master cylinder low on fluid. See dealer.
2. Brake line contains air bubbles. See dealer.
3. Master cylinder piston worn. See dealer.
4. Brake pads contaminated with grease or oil. See dealer.
5. Brake pads badly worn. See dealer.
6. Brake disc badly worn or warped. See dealer.
7. Brake fades because of heat build up. Excessive braking or brake pads dragging. See dealer.
8. Brake drags. Insufficient hand lever freeplay. See dealer.

Warranties and Responsibilities

Warranty and Maintenance

This Owner's Manual contains your new motorcycle warranty and an owner's maintenance record.

It is the owner's responsibility to follow the scheduled mileage intervals as specified. All of the specified maintenance services must be performed to keep your warranty valid.

1. Make an appointment with a Harley-Davidson dealer for inspection and service prior to first 1000 miles 1600 kilometers .
2. Bring this Owner's Manual with you when you visit your dealer to have your motorcycle inspected and serviced.
3. Have the dealer technician sign the maintenance record in the Owner's Manual at the proper mileage interval. The records should be retained by the owner as proof of proper

maintenance.

4. Keep receipts covering any parts, service or maintenance performed.

These records should be transferred to each subsequent owner.

⚠WARNING

Do not use aftermarket parts and custom made front forks which can adversely affect performance and handling. Removing or altering factory installed parts can adversely affect performance and could result in death or serious injury. (00001a)

Use only Harley-Davidson approved parts and accessories. Use of other manufacturers performance parts may void your warranty. See a Harley-Davidson dealer.

Harley-Davidson dealerships are independently owned and operated and may sell parts and accessories that are not manufactured or approved by Harley-Davidson. Therefore, you should understand that we are not and cannot be responsible for the quality, suitability, or safety of any non-Harley-Davidson part, accessory or design modification, including labor, which may be sold and/or installed by our dealers.

Keeping It All Harley-Davidson

Genuine Harley-Davidson parts are engineered and tested specifically for use on your motorcycle. Insist that your dealer uses only Genuine replacement parts to keep your Harley-Davidson motorcycle and its warranty intact.

NOTE:

Installing off-road or competition parts to enhance performance may void all or part of your new motorcycle warranty. See the Harley-Davidson Motorcycle Limited Warranty in this manual or a Harley-Davidson dealer for details.

CAUTION

It is possible to overload your motorcycle's charging system by adding too many electrical accessories. If your combined electrical accessories operating at any one time consume more electrical current than your vehicle's charging system can produce, the electrical consumption can discharge the battery and cause vehicle electrical system damage. See a Harley-Davidson dealer for advice about the amount of current consumed by additional electrical accessories, or for necessary wiring changes. (00211b)

California Evaporative Emission Controls: 2010 Models

All new 2010 Harley-Davidson motorcycles sold in the State of California are equipped with an evaporative emission control system. This system is designed to meet the CARB regulations in

effect at the time of manufacture. A complete CARB emissions warranty statement can be obtained from your dealer.

The system requires a small amount of maintenance. Periodic inspection is required to make sure hoses are properly routed, not kinked or blocked and that all fittings are secure. Mounting hardware should also be checked periodically for tightness.

EPA Noise Regulations in the United States

EPA noise regulations require that the following statements be included in the Owner's Manual.

EPA Regulations

TAMPERING WITH NOISE CONTROL SYSTEM PROHIBITED: Federal law prohibits the following acts or the causing thereof: (1) The removal or rendering inoperative by any person other than for purposes of maintenance, repair, or replacement of any device or element of design incorporated into any new vehicle for the purpose of noise control prior to its sale or delivery to the ultimate purchaser or while it is in use, or (2) the use of the vehicle after such device or element of design has been removed or rendered inoperative by any person.

AMONG THOSE ACTS PRESUMED TO CONSTITUTE TAMPERING ARE THE FOLLOWING:

1. Replacing the muffler(s) and/or the entire exhaust system with parts not certified to be noise legal for street use.
2. Removing or modifying the muffler internal baffles in any way.
3. Replacing the air intake/cleaner assembly with one not certified to be noise legal for street use.
4. Modifying the air intake/cleaner assembly in such a way as to make the vehicle no longer noise legal for street use.

Harley-Davidson recommends that any and all noise related maintenance be done by an authorized Harley-Davidson dealer using genuine Harley-Davidson parts.

Warranty/Service Information

Any authorized Harley-Davidson dealer is responsible for providing the warranty repair work on your motorcycle. If you have any questions regarding warranty obligations contact your selling dealer.

For normal service work or warranty work under the above conditions, you may obtain the name and location of your nearest U.S. Harley-Davidson dealer by calling 800-490-9635 (toll free), in any state except Alaska and Hawaii. To find dealers worldwide, see www.harley-davidson.com.

NOTE:

The number shown above is accessible only with a touch-tone phone.

Reporting Safety Defects in United States

Safety defects must be reported to the National Highway Traffic Safety Administration (NHTSA)

and Harley-Davidson.

NHTSA Statement

If you believe that your vehicle has a defect which could cause a crash or could cause injury or death, you should immediately inform the National Highway Traffic Safety Administration (NHTSA) in addition to notifying Harley-Davidson.

If NHTSA receives similar complaints, it may open an investigation, and if it finds that a safety defect exists in a group of vehicles, it may order a recall and remedy campaign. However, NHTSA cannot become involved in individual problems between you, your dealer, or Harley-Davidson.

Refer to NHTSA Contacts to contact NHTSA.

NHTSA Contacts

ITEM	DATA
Phone	Call the Auto Safety Hot Line toll-free at 888-DASH-2DOT
Mail	U.S. Department of Transportation, National Highway Traffic Safety Administration, Office of Defects Investigation, NVS-210, 400 7th Street S.W., Washington, D.C. 20590
Web site	www.nhtsa.dot.gov

You can also obtain other information about motor vehicle safety from the hot line.

Required Documentation for Imported Motorcycles

If a Harley-Davidson is imported into the United States, additional documentation is required to be eligible for the United States Manufacturer's Limited Warranty. A Harley-Davidson dealer can provide a form explaining the requirements.

Owner Contact Information

If you move from your present address, sell your motorcycle, or purchase a pre-owned Harley-Davidson or Buell motorcycle, see a Harley-Davidson or Buell dealer to update your owner contact information.

This will provide the Company with an accurate registration (as required by law in some countries), and will allow the Company to notify you in the event of a recall or product program.

Updated owner information must also be on file with the Company when transferring an Extended Service Plan Contract on a pre-owned motorcycle.

When updating your contact information, your dealer will need your vehicle identification number (VIN), odometer mileage, and date of vehicle transfer (if applicable).

Limited Motorcycle Warranty

2010 HARLEY-DAVIDSON MOTORCYCLE LIMITED WARRANTY

24 Months/Unlimited Miles

Harley-Davidson warrants for any new 2010 Harley-Davidson motorcycle/sidecar that an authorized Harley-Davidson dealer will repair or replace without charge any parts found under normal use to be defective in factory materials or workmanship. Such repair and replacement will be Harley-Davidson's sole obligation and the customer's sole remedy under this warranty.

THERE IS NO OTHER EXPRESS WARRANTY (OTHER THAN THE SEPARATE EMISSIONS AND NOISE WARRANTIES) ON THE MOTORCYCLE. ANY IMPLIED WARRANTY OF MERCHANTABILITY OR FITNESS FOR PARTICULAR PURPOSE IS LIMITED TO THE DURATION OF THIS WARRANTY.

Some states do not allow limitations on how long an implied warranty lasts, so the above limitation may not apply to you.

TO THE FULLEST EXTENT ALLOWED BY LAW, HARLEY-DAVIDSON AND ITS DEALERS SHALL NOT BE LIABLE FOR LOSS OF TIME, INCONVENIENCE, LOSS OF MOTORCYCLE USE, COMMERCIAL LOSS OR OTHER INCIDENTAL OR CONSEQUENTIAL DAMAGES. Some states do not allow the exclusion or limitation of incidental or consequential damages, so the above limitation or exclusion may not apply to you. This warranty gives you specific legal rights, and you may have other rights which vary from state to state.

The following terms and conditions apply to this warranty:

Duration

1. The duration of this limited warranty is twenty four months, starting from the earlier of (a) the date of initial retail purchase and delivery from an authorized Harley-Davidson dealer, or (b) the third anniversary of the last day of the model year of the motorcycle/sidecar. Your dealer will submit an electronic Sales and Warranty Registration form to initiate your warranty.

2. Any unexpired portion of this limited warranty will be transferred to subsequent owners, upon the resale of the motorcycle/sidecar during the warranty period.

Owner's Obligations

To obtain warranty service, return your motorcycle/sidecar at your expense within the warranty period to an authorized dealer. Our dealer should be able to provide warranty service during normal business hours and as soon as possible, depending upon the workload of the dealer's service department and the availability of necessary parts.

Harley-Davidson Motor Company, P.O. Box 653, Milwaukee, Wisconsin 53201, U.S.A.

Exclusions

This warranty will not apply to any motorcycle/sidecar as follows:

1. Which has not been operated or maintained as specified in the Owner's Manual.
2. Which has been abused, misused, improperly stored, used "off the highway," or used for racing or competition of any kind.
3. Which is not manufactured to comply with the laws of the market in which it is registered.
4. Installing off-road or competition parts to enhance performance may void all or part of your new motorcycle warranty. See a Harley-Davidson dealer for details.
5. Acts of God, war, riot, insurrection, natural disasters, including, but not limited to, nuclear contamination, lightning, forest fires, dust storms, hail storms, ice storms, earthquakes, floods, or for other circumstances out of Harley-Davidson's control.

Other Limitations

This warranty does not cover:

1. Parts and labor for normal maintenance as recommended in the Owner's Manual, or the replacement of parts due to normal wear and tear including such items as the following: tires, lubrication, oil and filter change, fuel system cleaning, battery maintenance, engine tune-up, spark plugs, brake, clutch, chain/belt adjustment and chain replacement.
2. Cosmetic concerns that arise as a result of owner abuse, lack of proper maintenance or environmental conditions (except concerns that result from defects in material or workmanship, which are covered by this warranty for the duration of the warranty period).
3. Any cosmetic condition existing at the time of retail delivery that has not been documented by the selling dealer prior to retail delivery.
4. Defects or damage to the motorcycle caused by alterations outside of Harley-Davidson factory specifications.

Important: Read Carefully

---

1. Our dealers are independently owned and operated and may sell other products. Because of this, HARLEY-DAVIDSON IS NOT RESPONSIBLE FOR THE SAFETY, QUALITY, OR SUITABILITY OF ANY NON-HARLEY-DAVIDSON PART, ACCESSORY OR DESIGN MODIFICATION INCLUDING LABOR WHICH MAY BE SOLD AND/OR INSTALLED BY OUR DEALERS.
2. This limited warranty is a contract between you and the manufacturer. It is separate and apart from any warranty you may receive or purchase from the dealer. The dealer is not authorized to alter, modify, or in any way change the terms and conditions of this warranty.
3. Any warranty work or parts replacement authorized by the manufacturer will not preclude the manufacturer from later relying on any exclusion where applicable.

Limited Noise Warranty

2010 HARLEY-DAVIDSON MOTORCYCLE NOISE CONTROL SYSTEM LIMITED WARRANTY

The following warranty applies to the noise control system, is in addition to the MOTORCYCLE LIMITED WARRANTY and EMISSION CONTROL SYSTEM LIMITED WARRANTY, and applies only to motorcycles sold in the U.S.

Harley-Davidson Motor Company warrants to the first owner and each subsequent owner that this vehicle is designed and built so as to conform at the time of sale with applicable regulations of the U.S. Environmental Protection Agency (as tested following F-76 Drive-By test procedure) and that it is free from defects in materials and workmanship which can cause this motorcycle not to meet U.S. Environmental Protection Agency Standards within one (1) year from initial retail purchase and delivery from an authorized Harley-Davidson dealer or one (1) year from the [second] anniversary of the last day of the model year of the motorcycle, or 3,730 miles 6,000 kilometers whichever occurs first. Any unexpired portion of this limited warranty will be transferred to subsequent owners, upon the resale of the motorcycle during the warranty period. If the motorcycle was used as a demonstrator, then the warranty period may have started and/or expired prior to the initial retail sale. See a Harley-Davidson dealer for details.

THERE IS NO OTHER EXPRESS WARRANTY (OTHER THAN THE SEPARATE MOTORCYCLE AND EMISSIONS WARRANTIES) ON THE MOTORCYCLE. ANY IMPLIED WARRANTY OF MERCHANTABILITY OR FITNESS FOR PARTICULAR PURPOSE IS LIMITED TO THE DURATION OF THIS WARRANTY.

Some states do not allow limitations on how long an implied warranty lasts, so the above limitation may not apply to you.

The Limited 2 year warranty period shall begin on the date the motorcycle is delivered to the first retail purchaser or, if the motorcycle is placed in service as a demonstrator or company vehicle prior to sale at retail, on the date it is first placed in service.

THE FOLLOWING ITEMS ARE NOT COVERED BY THE NOISE CONTROL SYSTEM WARRANTY

1. Failures which arise as a result of misuse, alteration, or non-performance of maintenance as specified in the Owner's Manual.

2. Replacing, removing, or modifying any portion of the NOISE CONTROL SYSTEM (consisting of the exhaust system and air intake/cleaner assembly) with parts not certified to be noise legal for street use.

3. Any motorcycle on which the odometer mileage has been changed so that the mileage cannot be determined.

4. TO THE FULLEST EXTENT ALLOWED BY LAW, HARLEY-DAVIDSON AND ITS DEALERS SHALL NOT BE LIABLE FOR LOSS OF TIME, INCONVENIENCE, LOSS OF MOTORCYCLE USE, COMMERCIAL LOSS OR OTHER INCIDENTAL OR CONSEQUENTIAL DAMAGES.

Some states do not allow the exclusion or limitation of incidental or consequential damages, so the above limitation or exclusion may not apply to you.

Other Rights

This warranty gives you specific legal rights, and you may have other rights which vary from state to state.

Recommendations for Required Maintenance

It is recommended that any noise system maintenance be performed by an authorized Harley-Davidson dealer using genuine Harley-Davidson replacement parts. The maintenance, replacement or repair of the noise control system may be performed by any other qualified service outlet or individual. Non-genuine parts may be used only if such parts are certified to comply with U.S. Environmental Protection Agency Standards.

Harley-Davidson Motor Company, P.O. Box 653, Milwaukee, Wisconsin 53201, U.S.A.

Limited Emission Warranty

2010 HARLEY-DAVIDSON EMISSION CONTROL SYSTEM LIMITED WARRANTY

The following warranty applies to the emission control system, is in addition to the MOTORCYCLE LIMITED WARRANTY and NOISE CONTROL SYSTEM LIMITED WARRANTY, and applies only to motorcycles sold in the U.S.

Harley-Davidson Motor Company warrants to the first owner and each subsequent owner that this vehicle is designed and built so as to conform at the time of sale with applicable regulations of the U.S. Federal Environmental Protection Agency, and that it is free from defects in materials and workmanship which would cause this motorcycle not to meet U.S. Environmental Protection Agency Standards within five (5) years from initial retail purchased and delivery from an authorized Harley-Davidson dealer or five (5) years from the [second] anniversary of the last day of the model year of the motorcycle, or 18,641 miles 30,000 kilometers whichever occurs first. Any unexpired portion of this limited warranty will be transferred to subsequent owners, upon the resale of the motorcycle during the warranty period. If the motorcycle was used as a demonstrator, then the warranty period may have started and/or expired prior to the initial retail sale. See a Harley-Davidson dealer for details.

THERE IS NO OTHER EXPRESS WARRANTY (OTHER THAN THE SEPARATE MOTORCYCLE AND NOISE WARRANTIES) ON THE MOTORCYCLE. ANY IMPLIED WARRANTY OF MERCHANTABILITY OR FITNESS FOR PARTICULAR PURPOSE IS LIMITED TO THE DURATION OF THIS WARRANTY.

Some states do not allow limitations on how long an implied warranty lasts, so the above limitation may not apply to you.

The warranty period shall begin on the date the motorcycle is delivered to the first retail purchaser or, if the motorcycle is placed in service as a demonstrator or company vehicle prior to sale at retail, on the date it is first placed in service.

THE FOLLOWING ITEMS ARE NOT COVERED BY THE EMISSION CONTROL SYSTEM WARRANTY

1. Failures which arise as a result of misuse, alterations, accident or non-performance of maintenance as specified in the Owner's Manual.

2. The replacement of parts (such as spark plugs, fuel and oil filters, etc.) used in required maintenance.

3. Any motorcycle on which the odometer mileage has been changed so that the mileage cannot be determined.

4. TO THE FULLEST EXTENT ALLOWED BY LAW, HARLEY-DAVIDSON AND ITS DEALERS SHALL NOT BE LIABLE FOR LOSS OF TIME, INCONVENIENCE, LOSS OF MOTORCYCLE USE, COMMERCIAL LOSS OR OTHER INCIDENTAL OR CONSEQUENTIAL DAMAGES.

Some states do not allow the exclusion or limitation of incidental or consequential damages, so the above limitation or exclusion may not apply to you.

Other Rights

This warranty gives you specific legal rights, and you may have other rights which vary from state to state.

Recommendations for Required Maintenance

It is recommended that any emission system maintenance be performed by an authorized Harley-Davidson dealer using genuine Harley-Davidson replacement parts. The maintenance, replacement or repair of the emissions control system may be performed by any other qualified service outlet or individual. Non-genuine parts may be used only if such parts are certified to comply with U.S. Environmental Protection Agency Standards.

Harley-Davidson Motor Company, P.O. Box 653, Milwaukee, Wisconsin 53201, U.S.A.

Maintenance Scheduling

Regular Service Intervals

Regular lubrication and maintenance will help keep your new Harley-Davidson motorcycle operating at peak performance. Your Harley-Davidson dealer knows best how to service your motorcycle with factory approved methods and equipment assuring you of thorough and competent workmanship.

NOTES:

- *Refer to Regular Service Intervals: 2010 FXDFSE2 Models. Regular maintenance interval operations are required to keep your new motorcycle warranty in force. The use of other than Harley-Davidson approved parts and service procedures may void the warranty. Any alterations to the emission system components, such as the exhaust system, may be in violation of Federal and State laws.*
- *Refer to Owner's Maintenance Records. When servicing your motorcycle, bring this owner's manual to the dealership and complete information needed in the blank columns listed.*

⚠WARNING

Perform the service and maintenance operations as indicated in the regular service interval table. Lack of regular maintenance at the recommended intervals can affect the safe operation of your motorcycle, which could result in death or serious injury. (00010a)

⚠WARNING

If you operate your motorcycle under adverse conditions (severe cold, extreme heat, very dusty environment, very bad roads, through standing water, etc.), you should perform the regular maintenance intervals more frequently to ensure the safe operation of your motorcycle. Failure to maintain your motorcycle could result in death or serious injury. (00094a)

Regular Service Intervals: 2010 FXDFSE2 Models

ITEM SERVICED	PROCEDURE	1000 MI 1600 KM	5000 MI 8000 KM	10,000 MI 16,000 KM	15,000 MI 24,000 KM	20,000 MI 32,000 KM	25,000 MI 40,000 KM	30,000 MI 48,000 KM	NOTES
Engine oil and filter	Replace	X	X	X	X	X	X	X	
Oil lines and brake system	Inspect for leaks, contact or abrasion	X	X	X	X	X	X	X	1, 3
Air cleaner	Inspect, service as required	X	X	X	X	X	X	X	
Tires	Check pressure, inspect tread	X	X	X	X	X	X	X	
Primary chaincase lubricant	Replace	X		X		X		X	
Transmission lubricant	Replace	X				X			
Clutch fluid	Check level and condition	X	X	X	X	X	X	X	1, 4
Drive belt and sprockets	Inspect, adjust belt	X	X	X	X	X	X	X	1
Throttle, brake and clutch controls	Check, adjust and lubricate	X	X	X	X	X	X	X	1
Jiffy stand	Inspect and lubricate	X		X		X		X	1
Fuel lines and fittings	Inspect for leaks, contact or abrasion	X	X	X	X	X	X	X	1, 3
Fuel pump filter	Replace						X		1
Brake fluid	Check levels and condition	X	X	X	X	X	X	X	4
Brake pads and discs	Inspect for wear	X	X	X	X	X	X	X	
Spark plugs	Inspect	X	X	X	X	X	X	X	
	Replace					X		X	
Electrical	Check operation	X	X	X	X	X	X	X	

equipment and switches									
Front fork oil	Replace								1, 5
Steering head bearings	Adjust	X		X		X		X	1, 2
Rear fork bearings	Inspect							X	1, 2
Critical fasteners	Check tightness	X		X		X		X	1
Engine mounts and stabilizer links	Inspect			X		X		X	1
Battery	Check battery and clean connections								3
Exhaust system	Inspect for leaks, cracks, and loose or missing fasteners or heat shields	X	X	X	X	X	X	X	3
Road test	Verify component and system functions	X	X	X	X	X	X	X	
NOTES:	1. Should be performed by an authorized Harley-Davidson dealer, unless you have the proper tools, service data and are mechanically qualified. 2. Disassemble, inspect and lubricate every 30,000 miles 48,000 kilometers . 3. Perform annually or at specified intervals, whichever comes first. 4. Replace D.O.T. 4 hydraulic brake/clutch fluid and flush system every two (2) years. 5. Replace fork oil and inspect every 50,000 miles 80,000 kilometers .								

Owner's Maintenance Records

SERVICE MILE INTERVAL	DATE	DEALER NUMBER	TECHNICIAN NAME	TECHNICIAN SIGNATURE
1000 MI 1600 KM				
5000 MI 8000 KM				
10,000 MI 16,000 KM				
15,000 MI 24,000 KM				
20,000 MI 32,000 KM				
25,000 MI 40,000 KM				
30,000 MI 48,000 KM				
35,000 MI 56,000 KM				
40,000 MI 64,000 KM				
45,000 MI 72,000 KM				

50,000 MI 80,000 KM				

Service Literature

Refer to Service Literature: 2010 FXDFSE2. Visit any Harley-Davidson dealer or go to www.harley-davidson.com to purchase a service or parts manual for your motorcycle. Factory authorized manuals are the most complete and detailed source of information outside of your Harley-Davidson dealer.

Service Literature: 2010 FXDFSE2

DOCUMENT	LANGUAGE	PART NUMBER
Dyna Models Service Manual	English	99481-10
FXDFSE2 Model Service Manual Supplement	English	99525-10
FXDFSE2 Model Service Manual Supplement	French	99525-10FR
FXDFSE2 Model Service Manual Supplement	German	99525-10GE
FXDFSE2 Model Service Manual Supplement	Spanish	99525-10SP
FXDFSE2 Model Service Manual Supplement	Italian	99525-10IT
Dyna Models Electrical Diagnostics Manual	English	99496-10
Dyna Models Service and Electrical Diagnostics Manual	French	99481-10FR
Dyna Models Service and Electrical Diagnostics Manual	German	99481-10GE
Dyna Models Service and Electrical Diagnostics Manual	Spanish	99481-10SP
Dyna Models Service and Electrical Diagnostics Manual	Italian	99481-10IT
FXDFSE2 Model Parts Catalog	English	99430-10

Product Registered Marks

Alcantara S.p.A., Allen, Amp Multilock, Bluetooth, Brembo, Delphi, Deutsch, Dunlop, Dynojet, Fluke, G.E. Versilube, Gunk, Hydroseal, Hylomar, Kevlar, Lexan, Loctite, Lubriplate, Keps, K&N, Magnaflux, Marson Thread-Setter Tool Kit, MAXI fuse, Molex, Michelin, MPZ, Mulitilock, NGK, Novus, Packard, Pirelli, Permatex, Philips, PJ1, Pozidriv, Robinair, S100, Sems, Snap-on, Teflon, Threadlocker, Torca, Torco, TORX, Tufoil, Tyco, Ultratorch, Velcro, X-Acto, and XM Satellite Radio are among the trademarks of their respective owners.

H-D Michigan, Inc. Trademark Information

Harley, Harley-Davidson, H-D, Bar & Shield, Cross Bones, Digital Tech, Digital Technician, Digital Technician II, Dyna, Electra Glide, Evolution, Fat Bob, Fat Boy, Glaze, Gloss, H-D, H-Dnet.com, HD, Harley, Harley-Davidson, Heritage Softail, Low Rider, Night Rod, Nightster, Night Train, Profile, Revolution, Road Glide, Road King, Road Tech, Rocker, Softail, Sportster, Street Glide, Street Rod, Sun Ray, Sunwash, Tech Link, Twin Cam 88, Twin Cam 88B, Twin Cam 96, Twin Cam 96B, Twin Cam 103, Twin Cam 103B, Twin Cam 110, Twin Cam 110B, Tour-Pak, Screamin' Eagle, Softail, Super Glide, SYN3, Ultra Classic, V-Rod, VRSC and Harley-Davidson Genuine Motor Parts and Genuine Motor Accessories are among the trademarks of H-D Michigan, Inc.