# Safety First

## Safe Operating Rules

**⚠WARNING**

**Motorcycles are different from other vehicles. They operate, steer, handle and brake differently. Unskilled or improper use could result in loss of control, death or serious injury. (00556c)**

- Take a rider training course.
- Read Owner's Manual before riding, adding accessories or servicing.
- Wear a helmet, eye protection and protective clothing.
- Never tow a trailer.

Before operating your motorcycle it is your responsibility to read and follow the operating and maintenance instructions in this manual, and follow these basic rules for your personal safety.

- Know and respect the rules of the road. See Rules of the Road. Carefully read and familiarize yourself with the motorcycle safety information that is provided by your country or state. In the United States, read the RIDING TIPS booklet that is provided with your Owner's Manual and the MOTORCYCLE HANDBOOK which is made available by your state.
- Before starting engine, check for proper operation of brake, clutch, shifter, throttle controls, correct fuel and oil supply.

**⚠WARNING**

**Harley-Davidson parts and accessories are designed for Harley-Davidson motorcycles. Using non-Harley-Davidson parts or accessories can adversely affect performance, stability or handling, which could result in death or serious injury. (00001b)**

- Use only Harley-Davidson approved parts and accessories. Use of certain other manufacturer's performance parts will void your new motorcycle warranty. See your Harley-Davidson dealer for details.

**⚠WARNING**

**Stop the engine when refueling or servicing the fuel system. Do not smoke or allow open flame or sparks near gasoline. Gasoline is extremely flammable and highly explosive, which could result in death or serious injury. (00002a)**

When refueling your motorcycle, observe the following rules.

- Refuel in a well ventilated area with the engine turned off.
- Remove fuel filler cap slowly.
- Do not smoke or allow open flames or sparks when refueling or servicing the fuel system.
- Do not fill fuel tank above the bottom of the filler neck insert.
- Leave air space to allow for fuel expansion.

**⚠WARNING**

**Do not store motorcycle with gasoline in tank within the**

**home or garage where open flames, pilot lights, sparks or electric motors are present. Gasoline is extremely flammable and highly explosive, which could result in death or serious injury. (00003a)**

**⚠WARNING**

**Engine exhaust from this product contains chemicals known to the State of California to cause cancer, and birth defects or other reproductive harm. (00004f)**

**⚠WARNING**

**Do not run motorcycle in a closed garage or confined area. Inhaling motorcycle exhaust, which contains poisonous carbon monoxide gas, could result in death or serious injury. (00005a)**

**⚠WARNING**

**The jiffy stand locks when placed in the full forward (down) position with vehicle weight on it. If the jiffy stand is not in the full forward (down) position with vehicle weight on it, the vehicle can fall over which could result in death or serious injury. (00006a)**

**⚠WARNING**

**Be sure jiffy stand is fully retracted before riding. If jiffy stand is not fully retracted, it can contact the road surface causing a loss of vehicle control, which could result in death or serious injury. (00007a)**

- A new motorcycle must be operated according to the special break-in procedure. See Break-in Riding Rules.
- Operate motorcycle only at moderate speed and out of traffic until you have become thoroughly familiar with its operation and handling characteristics under all conditions.

*NOTE:*

*We recommend that you obtain information and formal training in the correct motorcycle riding technique. In the United States, the Motorcycle Safety Foundation® offers beginning and advanced rider safety courses. Call 800-446-9227 for information.*

**⚠WARNING**

**Travel at speeds appropriate for road and conditions and never travel faster than posted speed limit. Excessive speed can cause loss of vehicle control, which could result in death or serious injury. (00008a)**

- Do not exceed the legal speed limit or drive too fast for existing conditions. Always reduce speed when poor driving conditions exist. High speed increases the influence of any other condition affecting stability and increases the possibility of loss of control.
- Pay strict attention to road surfaces and wind conditions and keep both hands on the handlebar grips at all times when riding the motorcycle. Any two wheeled vehicle may be subject to upsetting forces such as wind blasts from passing trucks, holes in the pavement, rough road surfaces, rider control error, etc. These forces may influence the handling characteristics of your motorcycle. If this happens, reduce speed and guide the motorcycle with a relaxed grip to a controlled condition. Do not brake abruptly or force the handlebar.

This may aggravate an unstable condition.

- Keep cargo weight concentrated close to the motorcycle and as low as possible to minimize the change in the motorcycle's center of gravity. Distribute weight evenly on both sides of the vehicle and do not load bulky items too far behind the rider or add weight to the handlebars or front forks. Do not exceed maximum specified load in each saddlebag.

*NOTE:*

*New riders should gain experience under various conditions while riding at moderate speeds.*

- Operate your motorcycle defensively. Remember, a motorcycle does not afford the same protection as an automobile in an accident. One of the most common accident situations occurs when the driver of the other vehicle fails to see or recognize a motorcycle and turns left into the on-coming motorcyclist. Operate only with headlamp on.
- Wear an approved helmet, clothing, and foot gear suited for motorcycle riding. Bright or light colors are best for greater visibility in traffic, especially at night. Avoid loose, flowing garments and scarves.

**⚠WARNING**

**Avoid contact with exhaust system and wear protective clothing that completely covers legs while riding. Exhaust pipes and mufflers get very hot when engine is running and remain too hot to touch, even after engine is turned off. Failure to wear protective clothing could result in burns or other serious injury. (00009a)**

- When carrying passengers, it is your responsibility to instruct them on proper riding procedures. (See the RIDING TIPS booklet included in your Harley-Davidson Owner's Kit.)

- Do not allow other individuals, under any circumstances, to operate your motorcycle unless you know they are experienced, licensed riders and are thoroughly familiar with the operation of your particular motorcycle.

- Protect your motorcycle against theft. After parking your motorcycle, lock the steering head and remove the key from the motorcycle.
- Safe motorcycle operation requires alert mental judgment combined with a defensive driving attitude. Do not allow fatigue, alcohol or drugs to endanger your safety or that of others.
- Vehicles equipped with a sound system should have the volume adjusted to a non-distracting level before operating vehicle.
- Maintain your motorcycle in proper operating condition in accordance with Regular Service Intervals: 2013 Softail Models. Proper care and maintenance, including tire pressure, condition and tread depth plus proper adjustment to steering head bearings are particularly important to the stability and safe operation of the motorcycle.

**⚠WARNING**

**Do not operate vehicle with forks locked. Locking the forks restricts the vehicle's turning ability, which could result in death or serious injury. (00035a)**

**⚠WARNING**

**Perform the service and maintenance operations as indicated in the regular service interval table. Lack of regular maintenance at the recommended intervals can affect the safe operation of your motorcycle, which could result in death or serious injury. (00010a)**

**⚠WARNING**

**Do not operate motorcycle with loose, worn or damaged**

**steering or suspension systems. Contact a Harley-Davidson dealer for repairs. Loose, worn or damaged steering or suspension components can adversely affect stability and handling, which could result in death or serious injury. (00011a)**

**⚠WARNING**

**Regularly inspect shock absorbers and front forks. Replace leaking, damaged or worn parts that can adversely affect stability and handling, which could result in death or serious injury. (00012a)**

**⚠WARNING**

**Use Harley-Davidson replacement fasteners. Aftermarket fasteners can adversely affect performance, which could result in death or serious injury. (00013a)**

- See your Harley-Davidson service manual for proper torque values.
- Aftermarket fasteners may not have the specific property requirements to perform properly.

**⚠WARNING**

**Be sure tires are properly inflated, balanced, undamaged, and have adequate tread. Inspect your tires regularly and see a Harley-Davidson dealer for replacements. Riding with excessively worn, unbalanced, improperly inflated, overloaded or damaged tires can lead to tire failure and adversely affect stability and handling, which could result in death or serious injury. (00014b)**

**⚠WARNING**

**Replace punctured or damaged tires. In some cases, small punctures in the tread area may be repaired from within the removed tire by a Harley-Davidson dealer. Speed should NOT exceed 50 mph (80 km/h) for the first 24 hours after repair, and the repaired tire should NEVER be used over 80 mph (130 km/h). Failure to follow this warning could lead to tire failure and result in death or serious injury. (00015b)**

**⚠WARNING**

**Do not exceed the motorcycle's Gross Vehicle Weight Rating (GVWR) or Gross Axle Weight Rating (GAWR). Exceeding these weight ratings can lead to component failure and adversely affect stability, handling and performance, which could result in death or serious injury. (00016f)**

- GVWR is the sum of the weight of the motorcycle, accessories, and the maximum weight of the rider, passenger and cargo that can be safely carried.
- The GVWR is shown on the information label, located on the frame steering head or the frame downtube.
- GAWR is the maximum amount of weight that can be safely carried on each axle.
- Refer to weight table(s). See Specifications.

**⚠WARNING**

**Do not tow a disabled motorcycle. Towing can adversely affect stability and handling, which could result in death or serious injury. (00017a)**

**⚠WARNING**

**Do not pull a trailer with a motorcycle. Pulling a trailer can cause tire overload, damage and failure, reduced braking performance, and adversely affect stability and handling, which could result in death or serious injury. (00018c)**

**⚠CAUTION**

**Direct contact of D.O.T. 4 brake fluid with eyes can cause irritation. Avoid eye contact. In case of eye contact flush with large amounts of water and get medical attention. Swallowing large amounts of D.O.T. 4 brake fluid can cause digestive discomfort. If swallowed, obtain medical attention. Use in well ventilated area. KEEP OUT OF REACH OF CHILDREN. (00240a)**

**⚠WARNING**

**Batteries, battery posts, terminals and related accessories contain lead and lead compounds, and other chemicals known to the State of California to cause cancer, and birth defects or other reproductive harm. Wash hands after handling. (00019e)**

**⚠WARNING**

**Do not open storage compartments while riding. Distractions while riding can lead to loss of control, which could result in death or serious injury. (00082a)**

**⚠WARNING**

**Consult a Harley-Davidson dealer regarding any questions or problems that occur in the operation of your motorcycle. Failure to do so can aggravate an initial problem, cause costly repairs, cause an accident and could result in death or serious injury. (00020a)**

- Be sure all equipment required by federal, state and local law is installed and in good operating condition.

## Anti-Lock Brake System (ABS)

**⚠WARNING**

**If ABS lamp remains on continuously, the ABS is not operating. The standard brake system is operational, but wheel lock up can occur. Contact a Harley-Davidson Dealer to have ABS repaired. A locked wheel will skid and can cause loss of vehicle control, which could result in death or serious injury. (00361a)**

**⚠WARNING**

**ABS cannot prevent lockup of rear wheel due to engine braking. ABS will not aid in cornering or on loose/uneven surfaces. A locked wheel will skid and can cause loss of vehicle control, which could result in death or serious injury. (00362a)**

See Brake System to properly operate motorcycles equipped with an Anti-lock Brake System.

## Rules of the Road

- Always sound your horn, actuate your turn signals, and exercise caution when passing other vehicles going in the same direction. Never try to pass another vehicle going in the same direction at street intersections, on curves, or when going up or down a hill.
- At street intersections give the right-of-way. Do not presume you have the right-of-way, as the other driver may not know it is your turn.
- Always signal when preparing to stop, turn or pass.
- All traffic signs, including those used for the control of traffic at intersections, should be obeyed promptly. SLOW DOWN signs near schools and CAUTION signs at railroad crossings should always be observed and your actions governed accordingly.
- When intending to turn, signal at least 100 ft 30.5 m before reaching the turning point. If turning across an intersection, move over to the centerline of the street (unless local rules require otherwise). Slow down when entering the intersection and turn carefully.
- Never anticipate a traffic light. When a change is indicated from GO to STOP (or STOP to GO) in the traffic control systems at intersections, slow down and wait for the light to change. Never run through a yellow or red traffic light.
- While turning either right or left, watch for pedestrians, animals, as well as vehicles.
- Do not leave the curb or parking area without signaling. Be sure your way is clear to enter moving traffic. A moving line of traffic always has the right-of-way.
- Be sure your license plate is installed in the position specified by law and is clearly visible at all times. Keep the plate clean.
- Ride at a safe speed that is consistent with the type of highway you are on. Pay strict attention to whether the road is dry, oily, icy or wet.
- Watch for debris such as leaves or loose gravel.
- Weather and traffic conditions on the highway dictate adjusting your speed and driving habits accordingly.

## Accessories and Cargo

Harley-Davidson Motor Company cannot test and make specific recommendations concerning every accessory or combination of accessories sold. Therefore, the rider must be responsible for safe operation of the motorcycle when installing accessories or carrying additional weight.

**⚠WARNING**

**See the Accessories and Cargo section in your owner's manual. Improper cargo loading or accessory installation can cause component failure and adversely affect stability, handling and performance, which could result in death or serious injury. (00021b)**

**⚠WARNING**

**Do not exceed the motorcycle's Gross Vehicle Weight Rating (GVWR) or Gross Axle Weight Rating (GAWR). Exceeding these weight ratings can lead to component failure and adversely affect stability, handling and performance, which could result in death or serious injury. (00016f)**

- GVWR is the sum of the weight of the motorcycle, accessories, and the maximum weight of

the rider, passenger and cargo that can be safely carried.
- GAWR is the maximum amount of weight that can be safely carried on each axle.
- The GVWR and GAWR are shown on the information label which is located on the frame down tube in some destinations.
- Refer to weight table(s). See Specifications.

**⚠WARNING**

**Do not pull a trailer with a motorcycle. Pulling a trailer can cause tire overload, damage and failure, reduced braking performance, and adversely affect stability and handling, which could result in death or serious injury. (00018c)**

## Accessories and Cargo Guidelines

The following guidelines should be used when equipping a motorcycle, carrying passengers and/or cargo.

**⚠WARNING**

**Travel at speeds appropriate for road and conditions and never travel faster than posted speed limit. Excessive speed can cause loss of vehicle control, which could result in death or serious injury. (00008a)**

- Do not exceed the legal speed limit or drive too fast for existing conditions. Always reduce speed when poor driving conditions exist. High speed increases the influence of any other condition affecting stability and increases the possibility of loss of control.
- Pay strict attention to road surfaces and wind conditions and keep both hands on the handlebar grips at all times when riding the motorcycle. Any two wheeled vehicle may be subject to upsetting forces such as wind blasts from passing trucks, holes in the pavement, rough road surfaces, rider control error, etc. These forces may influence the handling characteristics of your motorcycle. If this happens, reduce speed and guide the motorcycle with a relaxed grip to a controlled condition. Do not brake abruptly or force the handlebar. This may aggravate an unstable condition.
- Keep cargo weight concentrated close to the motorcycle and as low as possible. This minimizes the change in the motorcycle's center of gravity.
- Distribute weight evenly on both sides of the vehicle.
- Do not load bulky items too far behind the rider or add weight to the handlebars or front forks.
- Do not exceed maximum specified load in each saddlebag.
- Luggage racks are designed for lightweight items. Do not overload racks.
- Be sure cargo is secure and will not shift while riding and recheck the cargo periodically. Accessories that change the operator's riding position may increase reaction time and affect handling of the motorcycle.
- Additional electrical equipment may overload the motorcycle's electrical system possibly resulting in electrical system and/or component failure.

**⚠WARNING**

**The front and/or rear guard(s) can provide limited leg and cosmetic vehicle protection under unique circumstances. (Fall over while stopped, very slow speed slide.) It is not made or intended to provide protection from bodily injury in a collision with another vehicle or any other object. (00022a)**

- Large surfaces such as fairings, windshields, backrests, and luggage racks can have an adverse affect on stability and handling.
- Only properly installed Genuine Harley-Davidson accessories designed specifically for your

motorcycle model should be used.

- Pay particular attention to the weights of accessories, cargo, riding gear, passenger and rider and how the sum total of all these weights affect the loading capacity of your motorcycle.

**⚠WARNING**

**Harley-Davidson parts and accessories are designed for Harley-Davidson motorcycles. Using non-Harley-Davidson parts or accessories can adversely affect performance, stability or handling, which could result in death or serious injury. (00001b)**

**⚠WARNING**

**Only Touring Harley-Davidson Motorcycles are suitable for sidecar use. Consult a Harley-Davidson dealer. Use of motorcycles other than Touring models with sidecars could result in death or serious injury. (00040a)**

### Noise Control System

## Tampering

Owners are warned that removal or replacement of any noise control system component may be prohibited by law. This prohibition applies prior to vehicle sale or delivery to the ultimate purchaser. Use of a vehicle on which noise control system components have been removed or rendered inoperative may also be prohibited by law.

### Labels

See Labels for safety and maintenance labels which were on the vehicle when new. If removed, replacement labels may be purchased for your motorcycle. Refer to Labels.

*NOTE:*

*Some labels may be available in different languages for destinations outside the United States. See a Harley-Davidson dealer for all labels available for purchase.*

**Labels**

| ITEM | PART NO. | DESCRIPTION | LOCATION | TEXT |
|---|---|---|---|---|
| 1 | 29404-01A | General warnings (FLS, FLSTFB) | Top of air cleaner cover | WARNING: Motorcycles are different from other vehicles. They operate, steer, handle and brake differently. Unskilled or improper use could result in loss of control, death or serious injury.<br>• Take a rider training course.<br>• Read Owner's Manual before riding, adding accessories or servicing.<br>• Wear a helmet, eye protection and protective clothing.<br>• Never tow a trailer.<br>For a manual, find nearest dealer at 1-800-443-2153 or www.harley-davidson.com |
| | 29127-95B | General warnings (other models) | | |
| 2 | 15368-01A | Battery warning | On frame, left of battery | WARNING: A connected battery can cause a spark or motorcycle startup while servicing. Death or serious injury could occur. |

| | | | | |
|---|---|---|---|---|
| | | | | • Disconnect negative cable before servicing.<br>• Keep cable away from terminal while servicing. |
| 3 | Not sold separately | Shock absorber label | On shock absorbers | WARNING: This assembly contains high-pressure nitrogen gas. Any attempt to disassemble or refill this shock assembly may result in an explosion, causing serious injury. Exposure to flame or puncture may also result in an explosion, causing serious injury. Replacement and disposal should only be done by your authorized dealer. |
| 4 | 14000069 | Saddlebag load limits | Inside saddlebag (equipped models) | WARNING: Too much weight in saddlebags can cause loss of control. Death or serious injury could occur.<br>• Do not put more than 15 pounds in each saddlebag.<br>• Put equal weight in each saddlebag.<br>• See Accessories and Cargo section of Owner's Manual for more information. |

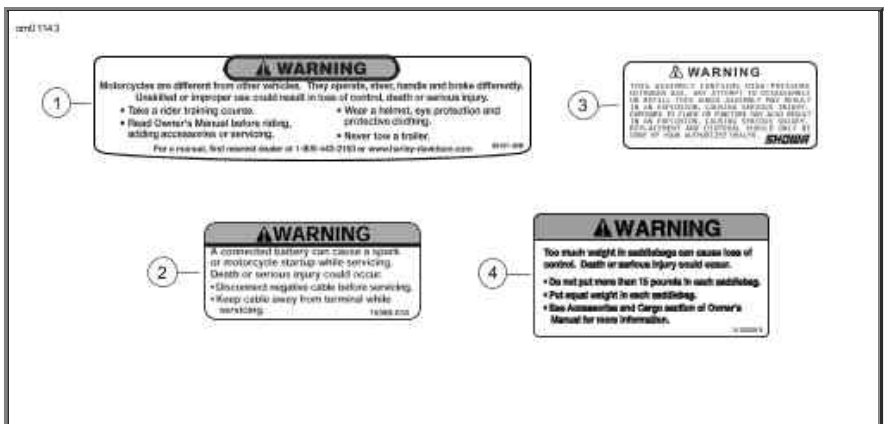

Labels

# Identification

### Vehicle Identification Number (VIN)

## General

See Typical Harley-Davidson VIN: 2013 Softail Models. A unique 17-digit serial or Vehicle Identification Number (VIN) is assigned to each motorcycle. Refer to Harley-Davidson VIN Breakdown: 2013 Softail Models.

## Location

See VIN Locations. The full 17-digit VIN is stamped on the right side of the frame near the steering head. In some destinations, a printed VIN label is also attached to the right front downtube.

## Abbreviated VIN

An abbreviated VIN showing the vehicle model, engine type, model year, and sequential number is stamped on the left side of the crankcase between the engine cylinders.

*NOTE:*

*Always give the full 17-digit Vehicle Identification Number when ordering parts or making any inquiry about your motorcycle.*

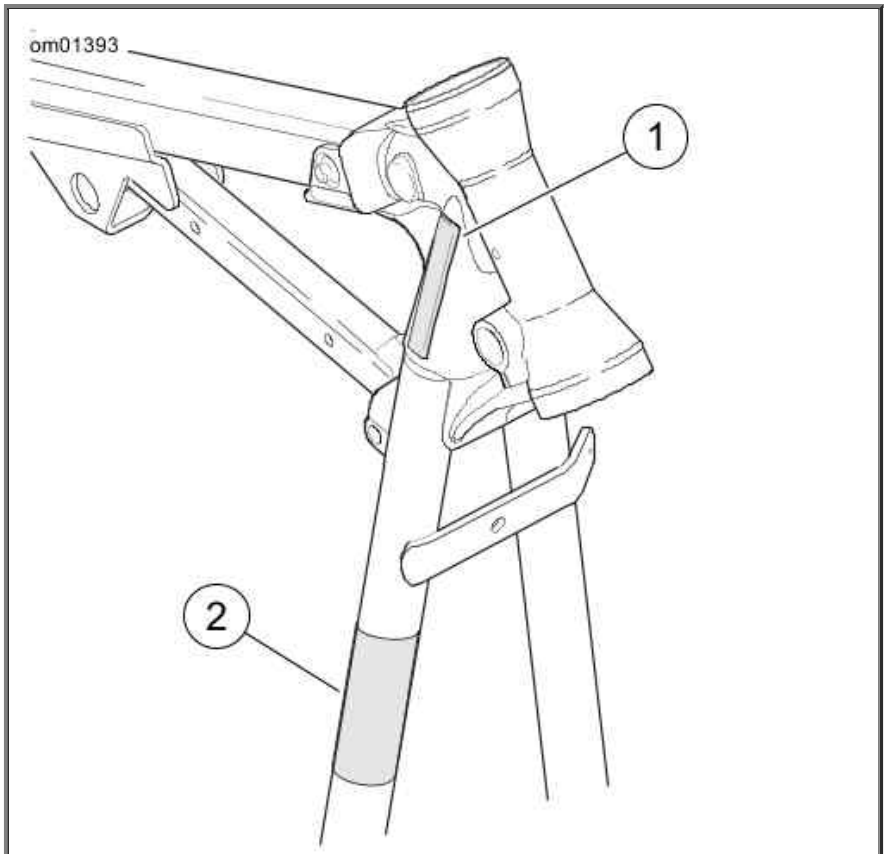


1. Stamped VIN
2. VIN label

**VIN Locations**

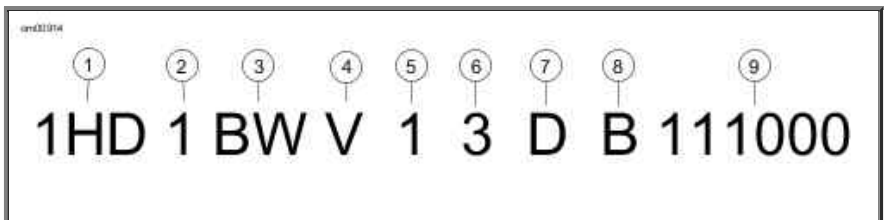


**Typical Harley-Davidson VIN: 2013 Softail Models**

**Harley-Davidson VIN Breakdown: 2013 Softail Models**

| POSITION | DESCRIPTION | POSSIBLE VALUES |
|---|---|---|
| 1 | World manufacturer identifier | 1HD=Originally manufactured for sale **within** the United States<br><br>5HD=Originally manufactured for sale **outside** of the United States<br><br>932=Originally manufactured in and for sale only in Brazil market<br><br>MEG=Originally manufactured in and for sale only in India market |
| 2 | Motorcycle type | 1=Heavyweight motorcycle (901 $cm^3$ or larger) |
| 3 | Model | See VIN model table |
| 4 | Engine type | 5=Twin Cam 96B™, 1585 $cm^3$ air-cooled, fuel- |

| | | | |
|---|---|---|---|
| | | injected, balanced<br><br>V=Twin Cam 103B™, 1690 $cm^3$ air-cooled, fuel-injected, balanced | |
| 5 | Calibration/configuration, introduction | **Normal Introduction**<br><br>1=Domestic (DOM)<br><br>3=California (CAL)<br><br>A=Canada (CAN)<br><br>C=HDI<br><br>E=Japan (JPN)<br><br>G=Australia (AUS)<br><br>J=Brazil (BRZ)<br><br>L=Asia Pacific (APC)<br><br>N=India (IND) | **Mid-year or Special Introduction**<br><br>2, 4=Domestic (DOM)<br><br>5, 6=California (CAL)<br><br>B=Canada (CAN)<br><br>D=HDI<br><br>F=Japan (JPN)<br><br>H=Australia (AUS)<br><br>K=Brazil (BRZ)<br><br>M=Asia Pacific (APC)<br><br>P=India (IND) |
| 6 | VIN check digit | Can be 0-9 or X | |
| 7 | Model year | D=2013 | |
| 8 | Assembly plant | B=York, PA U.S.A.<br><br>D=H-D Brazil-Manaus, Brazil (CKD)<br><br>N=Haryana India (Bawal District Rewari) | |
| 9 | Sequential number | Varies | |

**VIN Model Codes: 2013 Softail Models**

| CODE | MODEL | CODE | MODEL |
|---|---|---|---|
| BF | FXSB Softail® Breakout™ | JH | FLSTC Heritage Softail® Classic Shrine |
| BV | FXST Softail® Standard (Australia only) | JP | FXS Blackline® |
| BX | FLSTF Fat Boy® | JR | FLS Softail® Slim™ |
| BW | FLSTC Heritage Softail® Classic<br><br>FLSTC ANV Heritage Softail® Classic 110th Anniversary Edition | JN | FLSTFB Fat Boy® Lo<br><br>FLSTFB ANV Fat Boy® Lo 110th Anniversary Edition<br><br>FLSTFB Fat Boy® Special (some international markets) |
| JD | FLSTN Softail® Deluxe | | |

## Models and Features

Some models, features or configurations shown in this manual may not be available in all markets.

## Anniversary Models

Anniversary model motorcycles have special badging, paint and serialized numbering.

Refer to the features and instructions for the standard non-anniversary model unless otherwise noted.

# Specifications

## Specifications

**Engine: Twin Cam 96B™**

| ITEM | SPECIFICATION | |
|---|---|---|
| Number of cylinders | 2 | |
| Type | 4-cycle, 45 degree<br>V-Type, balanced, air cooled | |
| Compression ratio | 9.2:1 | |
| Bore | 3.750 in | 95.25 mm |
| Stroke | 4.38 in | 111.1 mm |
| Displacement | 96.0 $in^3$ | 1585 $cm^3$ |
| Lubrication system | Pressurized, dry sump | |

**Engine: Twin Cam 103B™**

| ITEM | SPECIFICATION | |
|---|---|---|
| Number of cylinders | 2 | |
| Type | 4-cycle, 45 degree<br>V-Type, balanced, air cooled | |
| Compression ratio | 9.6:1 | |
| Bore | 3.875 in. | 98.42 mm |
| Stroke | 4.38 in. | 111.1 mm |
| Displacement | 103.0 $in^3$ | 1690 $cm^3$ |
| Lubrication system | Pressurized dry sump | |

*NOTE:*

*Specifications in this publication may not match those of official certification in some markets due to timing of publication printing, variance in testing methods, and/or vehicle differences. Customers seeking officially recognized regulatory specifications for their vehicle should refer to certification documents and/or contact their respective dealer or distributor.*

**Electrical**

| COMPONENT | SPECIFICATION |
|---|---|
| Ignition timing | Not adjustable |
| Battery | 12 V, 19 Ah, 315 CCA<br>sealed and maintenance-free |
| Charging system | Three-phase, 38 A system<br>(439W @ 13V, 2000 rpm,<br>489W max power @ 13V) |
| Spark plug type | 6R12 |
| Spark plug size | 12 mm |

| | | |
|---|---|---|
| Spark plug size | 14 mm | |
| Spark plug gap | 0.038-0.043 in | 0.97-1.09 mm |
| Spark plug torque | 12-18 ft-lb | 16.3-24.4 Nm |

**Transmission**

| TRANSMISSION | SPECIFICATION |
|---|---|
| Type | Constant mesh, foot shift |
| Speeds | 6 forward |

**Sprocket Teeth**

| DRIVE | ITEM | NUMBER OF TEETH |
|---|---|---|
| Primary | Engine | 34 |
| | Clutch | 46 |
| Final | Transmission | 32 |
| | Rear wheel | 66* |
| *64 teeth on Japanese models | | |

**Overall Drive Ratios**

| GEAR | RATIO | |
|---|---|---|
| | DOMESTIC AND INTERNATIONAL | JAPANESE MODELS |
| 1st Gear | 9.311 | 9.029 |
| 2nd Gear | 6.454 | 6.259 |
| 3rd Gear | 4.793 | 4.648 |
| 4th Gear | 3.882 | 3.764 |
| 5th Gear | 3.307 | 3.207 |
| 6th Gear | 2.790 | 2.706 |

**Capacities**

| ITEM | U.S. | L |
|---|---|---|
| Fuel tank (total) | 5.0 gal | 18.9 |
| Low fuel warning light on | 1.0 gal | 3.8 |
| Oil tank with filter | 3.0 qt | 2.8 |
| Transmission (approximate) | 1.0 qt | 0.95 |
| Primary chaincase (approximate) | 1.0 qt | 0.95 |

**Dimensions: FLSTFB, FLSTC, FLSTF, and FLSTN**

| ITEM | FLSTFB | | FLSTC | | FLSTF | | FLSTN | |
|---|---|---|---|---|---|---|---|---|

| | in | mm | in | mm | in | mm | in | mm |
|---|---|---|---|---|---|---|---|---|
| Length | 94.3 | 2395 | 94.5 | 2400 | 94.3 | 2395 | 94.7 | 2405 |
| Overall Width | 39.0 | 990 | 37.6 | 955 | 39.0 | 990 | 38.6 | 980 |
| Overall Height | 43.1 | 1095 | 55.2 | 1402 | 43.1 | 1095 | 44.3 | 1125 |
| Wheel base | 64.5 | 1638 | 64.5 | 1638 | 64.5 | 1638 | 64.5 | 1638 |
| Road clearance | 4.8 | 122 | 5.1 | 130 | 5.1 | 130 | 4.8 | 122 |
| Saddle height* | 24.3 | 616 | 25.5 | 648 | 25.0 | 635 | 24.5 | 622 |
| *With 180 lb 81.6 kg rider on seat | | | | | | | | |

**Dimensions: FLS, FXST, FXS and FXSB**

| ITEM | FLS | | FXST | | FXS | | FXSB | |
|---|---|---|---|---|---|---|---|---|
| | in | mm | in | mm | in | mm | in | mm |
| Length | 94.7 | 2405 | 94.9 | 2410 | 93.0 | 2362 | 96.3 | 2445 |
| Overall Width | 39.0 | 990 | 36.0 | 915 | 34.0 | 864 | 36.0 | 915 |
| Overall Height | 43.3 | 1100 | 48.4 | 1230 | 47.3 | 1201 | 40.9 | 1040 |
| Wheel base | 64.5 | 1638 | 66.9 | 1700 | 66.5 | 1689 | 67.3 | 1710 |
| Road clearance | 4.8 | 121 | 6.2 | 159 | 5.25 | 133 | 4.7 | 120 |
| Saddle height* | 24.2 | 615 | 26.1 | 663 | 24.0 | 610 | 24.7 | 627.4 |
| *With 180 lb 81.6 kg rider on seat. | | | | | | | | |

**⚠WARNING**

**Do not exceed the motorcycle's Gross Vehicle Weight Rating (GVWR) or Gross Axle Weight Rating (GAWR). Exceeding these weight ratings can lead to component failure and adversely affect stability, handling and performance, which could result in death or serious injury. (00016f)**

- GVWR is the sum of the weight of the motorcycle, accessories, and the maximum weight of the rider, passenger and cargo that can be safely carried.
- GAWR is the maximum amount of weight that can be safely carried on each axle.
- The GVWR and GAWR are shown on the information plate, located on the frame down tube.

*NOTE:*

*The maximum additional weight allowed on the motorcycle equals the Gross Vehicle Weight Rating (GVWR) minus the running weight. For example, a motorcycle with GVWR of 1200 lbs 544 kg having a running weight of 800 lbs 363 kg , would allow a maximum of an additional 400 lbs 181 kg combined weight of the rider, passenger, riding gear, cargo and installed accessories.*

**Weights: FLSTC, FLSTF, FLSTFB and FLSTN**

| ITEM | FLSTC | | FLSTF | | FLSTFB | | FLSTN | |
|---|---|---|---|---|---|---|---|---|
| | lb | kg | lb | kg | lb | kg | lb | kg |
| Running weight* | 761 | 345.2 | 725 | 328.8 | 731 | 331.5 | 726 | 329.3 |
| Maximum added weight allowed** | 399 | 181.0 | 435 | 197.4 | 429 | 194.7 | 434 | 196.9 |
| GVWR | 1160 | 526.2 | 1160 | 526.2 | 1160 | 526.2 | 1160 | 526.2 |
| GAWR front | 430 | 195.0 | 430 | 195.0 | 430 | 195.0 | 430 | 195.0 |
| GAWR rear | 730 | 331.1 | 730 | 331.1 | 730 | 331.1 | 730 | 331.1 |
| *The total weight of the motorcycle as delivered with all oil/fluids and approximately 90% of fuel. | | | | | | | | |

| |
|---|
| **The total weight of accessories, cargo, riding gear, passenger and rider cannot exceed this weight. |

**Weights: FLS, FXST, FXS and FXSB**

| ITEM | FLS | | FXST | | FXS | | FXSB | |
|---|---|---|---|---|---|---|---|---|
| | lb | kg | lb | kg | lb | kg | lb | kg |
| Running weight* | 700 | 317.5 | 699 | 317.0 | 682.5 | 310.0 | 701 | 318 |
| Maximum added weight allowed** | 460 | 208.7 | 426 | 193.3 | 441.5 | 199.8 | 474 | 215 |
| GVWR | 1160 | 526.2 | 1125 | 510.3 | 1124 | 509.8 | 1175 | 533 |
| GAWR front | 430 | 195.0 | 415 | 188.2 | 414 | 187.7 | 415 | 188 |
| GAWR rear | 730 | 331.1 | 710 | 322.1 | 710 | 322.1 | 760 | 345 |
| *The total weight of the motorcycle as delivered with all oil/fluids and approximately 90% of fuel.<br><br>**The total weight of accessories, cargo, riding gear, passenger and rider cannot exceed this weight. | | | | | | | | |

**Bulb Chart**

| LAMP | DESCRIPTION (ALL LAMPS 12 V) | BULBS REQUIRED | CURRENT DRAW (AMPERAGE) | | HARLEY-DAVIDSON PART NUMBER |
|---|---|---|---|---|---|
| Headlamp | High beam/low beam | 1 | 4.7 (high beam) | 4.3 (low beam) | 68329-03 |
| | Position lamp international | 1 | 0.32 | | 53436-97 |
| Tail and stop lamp (FLSTN) | Tail/stop lamp | 1 | 0.59/2.10 | | 68168-89A |
| | Tail/stop lamp international | 1 | 0.59/2.10 | | 68169-90A |
| | License plate lamp | 1 | 0.35 | | 52441-95 |
| | License plate lamp international | 1 | 0.37 | | 53436-97 |
| Tail and stop lamp (Canada FLS, FXSB, and FXS) | Tail/stop lamp | Illuminated with LEDs. Replace entire assembly upon failure. | | | |
| Tail and stop lamp (other models, except international FLS, FXSB and FXS) | Tail/stop lamp | 1 | 0.59/2.10 | | 68167-04 |
| License plate lamp | Domestic/Canada FLS, FXSB and FXS | Illuminated with LEDs. Replace entire assembly upon failure. | | | |
| | International FLS, FXSB and FXS | 2 | .35 | | 52441-95 |
| Turn signal lamps | Front/running | 2 | 2.25 (turn signals) | 0.59 (front running) | 68168-89A |
| | Front international (except FLSTC) | 2 | 1.75 | | 68163-84 |
| | Front international | 2 | 1.75 | | 68572-04B |

| | | | | |
|---|---|---|---|---|
| | Front international (FLSTC) | 2 | 1.75 | 68572-64B |
| | Rear (FLSTC) | 2 | 2.25 | 68572-64B |
| | Rear (Domestic/Canada FLS, FXSB and FXS) | 2 | 2.25 | 68168-89A |
| | Rear turn signal (international FXS, FLS and FXSB) | Illuminated with LEDs. Replace entire assembly upon failure. | | |
| | Rear (other models) | 2 | 1.75 | 68163-84 |
| Auxiliary/fog lamps (FLSTC/FLSTN) | Domestic | 2 | 2.50 | 68453-05 |
| | International | 2 | 2.10 | 68000056 |
| Fender tip lamp | FLSTC | 2 | 0.10 | 68193-95 |
| Instrument panel lamps | Illuminated with LEDs. Replace entire assembly upon failure. | | | |

**Specified Tires**

| MODEL | MOUNT | SIZE | SPECIFIED TIRE | PRESSURE (COLD) | |
|---|---|---|---|---|---|
| | | | | psi | kPa |
| FLSTC, FLS | front | 16 in | Dunlop D402F MT90B16 | 36 | 248 |
| FLSTN, FLSTC (whitewall) | front | 16 in | Dunlop D402F MT90B16 | 36 | 248 |
| FLSTF, FLSTFB | front | 17 in | Dunlop D408F 140/75R17 | 36 | 248 |
| FXST | front | 21 in | Dunlop D408F MH90-21 | 30 | 207 |
| FXS | front | 21 in | Dunlop D402F MH90-21 | 30 | 207 |
| FXSB | front | 21 in | Dunlop D408F 130/60B21 | 36 | 248 |
| FLSTC | rear | 16 in | Dunlop D401 150/80B16 | 40 | 276 |
| FLSTN, FLSTC (whitewall) | rear | 16 in | Dunlop D402 MU85B16 | 40 | 276 |
| FXS, FLS | rear | 16 in | Dunlop D402 MU85B16 | 40 | 276 |
| FLSTF, FXST, FLSTFB | rear | 17 in | Dunlop D407 200/55R17 | 42 | 290 |
| FXSB | rear | 18 in | Dunlop D407 240/40R18 | 42 | 290 |

## Tire Data

**⚠WARNING**

**Match tires, tubes, rim strips or seals, air valves and caps to the correct wheel. Contact a Harley-Davidson dealer. Mismatching can lead to tire damage, allow tire slippage on the wheel or cause tire failure, which could result in death or serious injury. (00023c)**

**⚠WARNING**

**Use only Harley-Davidson specified tires. See a Harley-Davidson dealer. Using non-specified tires can adversely affect stability, handling or braking, which could result in death or serious injury. (00024b)**

Refer to Specified Tires for specified tires and recommended pressures.

**⚠WARNING**

**Install new seal before mounting tire. Riding motorcycle without seal in place can sever valve stem causing rapid air loss leading to the loss of control, which could result in death or serious injury. (00622b)**

Some 2012 and later Softail motorcycles with profile laced wheels (wire spoked wheels with smooth round rims) are fitted with a special rim seal, a rim strip and a tubeless tire. An inner tube is not used. These rims are unique and identified by the letters MTM and the word TUBELESS etched into the rim. Never install a tire with an inner tube on these type wheels. Install a new rim seal and rim strip each time a tire is mounted on a profile laced wheel with the MTM and TUBELESS markings.

Steel laced rims use an inner tube and rim strip. Tubeless tires fitted with the correct size inner tubes may be used with these wheels. Install a new inner tube and rim strip each time a new tire is installed on a steel laced wheel.

Tubeless tires are used on all Harley-Davidson cast and disc wheels.

Tire sizes are molded on the tire sidewall. Inner tube sizes are printed on the tube.

**⚠WARNING**

**Harley-Davidson front and rear tires are not the same. Interchanging front and rear tires can cause tire failure, which could result in death or serious injury. (00026a)**

**⚠WARNING**

**Be sure tires are properly inflated, balanced, undamaged, and have adequate tread. Inspect your tires regularly and see a Harley-Davidson dealer for replacements. Riding with excessively worn, unbalanced, improperly inflated, overloaded or damaged tires can lead to tire failure and adversely affect stability and handling, which could result in death or serious injury. (00014b)**

Always maintain proper tire pressure as specified in Specified Tires. Do not load tires beyond GAWR specified in Weights: FLSTC, FLSTF, FLSTFB and FLSTN and Weights: FLS, FXST, FXS and FXSB. Under-inflated, over-inflated or overloaded tires can fail.

**⚠WARNING**

**Replace tire immediately with a Harley-Davidson specified tire when wear bars become visible or only 1/32 in (0.8 mm) tread depth remains. Riding with a worn tire could result in death or serious injury. (00090c)**

Harley-Davidson tires are equipped with wear bars that run horizontally across the tread. When a tire is worn to the point that the wear bars are visible, or 1/32 in. 0.8 mm tread depth remains, the tire can:

- Be more easily damaged leading to tire failure.
- Provide reduced traction.
- Adversely affect stability and handling.

Harley-Davidson does not perform any testing with only nitrogen in tires. Harley-Davidson neither recommends nor discourages the use of pure nitrogen to inflate tires.

**India Tire Compliance Statement:** Harley-Davidson Motor Company declares that the tires listed in the specifications section meet the Indian Standard 15627 requirement of the Bureau of Indian Standards (as amended from time to time) required for registration of vehicles assembled in India.

These tires also comply with the Central Motor Vehicle Rules requirements, 1989.

## Gasoline Blends

Your motorcycle was designed to get the best performance and efficiency using unleaded gasoline. Most gasoline is blended with alcohol and/or ether to create oxygenated blends. The type and amount of alcohol or ether added to the fuel is important.

**CAUTION**

**Do not use gasoline that contains methanol. Doing so can result in fuel system component failure, engine damage and/or equipment malfunction. (00148a)**

- Gasoline/METHYL TERTIARY BUTYL ETHER (MTBE) blends are a mixture of gasoline and as much as 15% MTBE. Gasoline/MTBE blends use in your motorcycle is approved.
- ETHANOL fuel is a mixture of ethanol (grain alcohol) and unleaded gasoline and can have an impact on fuel mileage. Fuels with an ethanol content of up to 10% may be used in your motorcycle without affecting vehicle performance. U.S. EPA regulations currently indicate that fuels with 15% ethanol (E15) are restricted from use in motorcycles at the time of this publication. Some motorcycles are calibrated to operate with higher ethanol concentrations to meet the fuel standards in certain countries.
- REFORMULATED OR OXYGENATED GASOLINES (RFG) describes gasoline blends that are specifically designed to burn cleaner than other types of gasoline. This results in fewer tailpipe emissions. They are also formulated to evaporate less when filling the tank. Reformulated gasolines use additives to oxygenate the gas. Your motorcycle will run normally using this type of fuel. Harley-Davidson recommends using it whenever possible as an aid to cleaner air in our environment.
- Do not use racing fuel or fuel containing methanol. Use of these fuels will damage the fuel system.
- The only octane booster Harley-Davidson recommends is SCREAMIN' EAGLE SUPER OCTANE BOOST (available only in the U.S.). This is the only octane booster that has been extensively tested and approved for use with Harley-Davidson engines and components.

Some gasoline blends might adversely affect starting, driveability or fuel efficiency. If any of these problems are experienced, try a different brand of gasoline or gasoline with a higher octane blend.

## Fuel

Always use a good quality unleaded gasoline. Octane ratings are usually found on the pump. Refer to Octane Ratings.

**⚠WARNING**

**Avoid spills. Slowly remove filler cap. Do not fill above bottom of filler neck insert, leaving air space for fuel expansion. Secure filler cap after refueling. Gasoline is extremely flammable and highly explosive, which could result in death or serious injury. (00028a)**

**⚠WARNING**

**Use care when refueling. Pressurized air in fuel tank can force gasoline to escape through filler tube. Gasoline is extremely flammable and highly explosive, which could result in death or serious injury. (00029a)**

Modern service station pumps dispense a high flow of gasoline into a motorcycle fuel tank making air entrapment and pressurization a possibility.

**Octane Ratings**

| SPECIFICATION | RATING |
|---|---|
| Pump Octane (R+M)/2 | 91 (95 RON) |

### Catalytic Converter

The motorcycle is equipped with catalytic converters (except Australia).

**CAUTION**

**Do not operate catalytic converter-equipped vehicle with engine misfire. If you operate the vehicle under this condition, the exhaust will become abnormally hot, which can cause vehicle damage, including emission control loss. (00149c)**

**CAUTION**

**Use only unleaded fuel in catalytic converter-equipped motorcycles. Using leaded fuel will damage the emission control system. (00150b)**

## Controls and Indicators

### General: Controls and Indicators

**⚠WARNING**

**Read the CONTROLS AND INDICATORS section before riding your motorcycle. Failure to understand the operation of the motorcycle could result in death or serious injury. (00043a)**

Some features explained are unique to certain models. These features may be available as accessories for your Harley-Davidson motorcycle. See a Harley-Davidson dealer for a complete list of accessories that will fit your specific motorcycle.

### Ignition Switch

## General

**⚠WARNING**

**The automatic-on headlamp feature provides increased visibility of the rider to other motorists. Be sure headlamp is on at all times. Poor visibility of rider to other motorists can result in death or serious injury. (00030b)**

Refer to Ignition Switch Positions. The ignition switch controls electrical functions of the motorcycle.

See the "YOUR OWNER'S MANUAL" section at the front of this book. Be sure to record all your key numbers in the space provided. The key number is under the plastic cover on the top of the

key.

*NOTE:*

*The lamps work when the switch is in the IGN position, as required by law in some localities.*

**CAUTION**

**Protect your vehicle against theft. Failure to lock the motorcycle after parking could result in theft and/or equipment damage. (00151b)**

**⚠WARNING**

**Do not operate vehicle with forks locked. Locking the forks restricts the vehicle's turning ability, which could result in death or serious injury. (00035a)**

**CAUTION**

**Do not lubricate barrel locks with petroleum based lubricants or graphite. Inoperative locks may result. (00152a)**

## All Models Except FXS and FXSB

---

See Ignition Switch: Softail Models (Except FXS and FXSB). The ignition switch is located on the instrument panel on top of the tank.

**Unlock:** To unlock the switch, insert key and turn clockwise to unlock position. Remove the key from ignition switch before operating motorcycle. If you do not remove key, it can fall out while riding.

**Operate:** Rotate switch to desired position. Refer to Ignition Switch Positions for ignition switch functions.

**Lock:** The switch can be locked in the OFF or ACC position. To lock the switch, raise the switch cover, insert key, and turn counterclockwise to LOCK position.

**CAUTION**

**Turn the ignition switch to the OFF position before locking the motorcycle. Leaving the switch in the ACC position will keep the instrument lights on and result in a discharged battery. (00492b)**

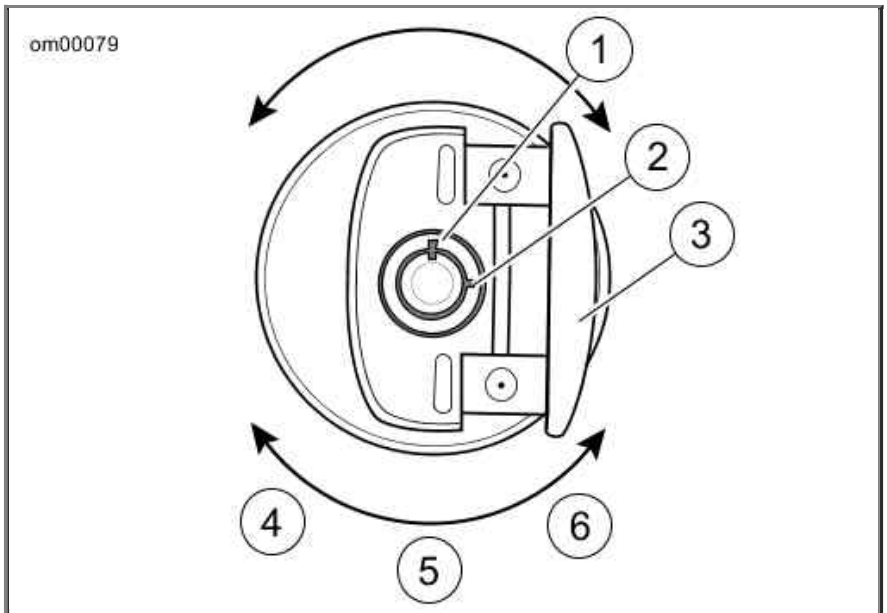


1. Lock position
2. Unlock position
3. Open switch cover
4. IGN
5. OFF (lock)
6. Accessory (lock)

**Ignition Switch: Softail Models (Except FXS and FXSB)**

## FXS and FXSB Models

See Ignition Switch: FXS and FXSB Models. The ignition switch is located on the left side of the vehicle between the engine cylinders.

**Unlock:** Insert key and turn clockwise to unlock the thumb lever. Remove the key from ignition switch before operating motorcycle. If you do not remove key, it can fall out while riding.

**Operate:** Use the thumb lever to select the ACC or IGN positions. Refer to Ignition Switch Positions for ignition switch functions.

**Lock:** Turn the thumb lever to OFF. Insert the key and turn counterclockwise to lock the thumb lever. Remove the key.

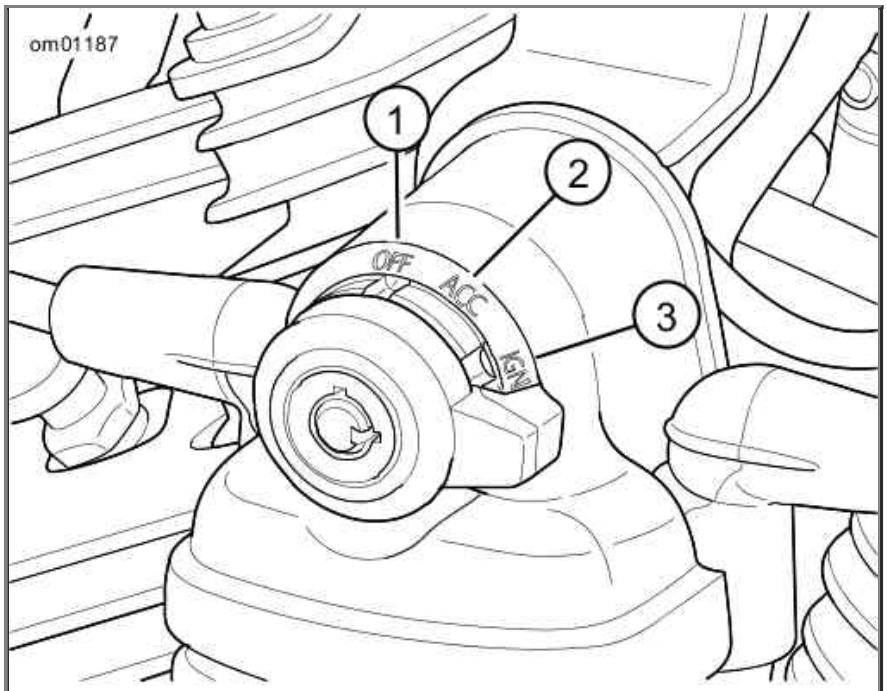


1. OFF
2. ACC
3. IGN

**Ignition Switch: FXS and FXSB Models**

**Ignition Switch Positions**

| SWITCH POSITION | FUNCTION |
|---|---|
| OFF | Ignition, lamps and accessories are off. |
| ACC* | Accessories are on. Hazard warning flashers can be operated. Instrument lamps are on. The headlamp switch can be switched between HI and LO. Brake lamp and horn can be activated. |
| IGNITION* | Ignition, lamps and accessories are on. |
| *International models have an additional function - position lamp and tail lamp are also on.<br><br>NOTE: Leaving the motorcycle in ACC for an extended amount of time can discharge the battery. If in ACC, the motorcycle will be automatically turned OFF after two hours to prevent battery from complete discharge. To resume normal operation turn the ignition switch back to OFF and then to the desired position. | |

### Hand Controls

## Electric Starter Switch

See Handlebar Controls. The electric starter switch (5) is located on the right handlebar control group. See Starting the Engine.

1. Put the engine OFF/RUN switch (6) in the RUN position and the transmission in neutral. Neutral (green) indicator lamp should be illuminated.

2. See Ignition Switch: Softail Models (Except FXS and FXSB). Turn the ignition switch to IGN and push the START switch to operate starter motor.

   *NOTES:*
   - *When the starter is activated, the headlamp will be momentarily turned off to reduce battery load.*
   - *If the engine does not start, the starter motor will operate for five seconds and then*

*stop. Release and press the START switch. After several unsuccessful start attempts, see a Harley-Davidson dealer.*

## Hazard Warning 4-Way Flasher

The hazard warning switch (5) is located above the electric starter switch. This system allows a stranded motorcycle to be left in the 4-way flashing mode and secured until help is found.

1. With the ignition switch in the IGN or ACC position, press on the hazard warning triangle to activate the 4-way flashers.

   *NOTE:*

   *If equipped with the optional security system, the fob must be present when turning the 4-way flashers on and when canceling the flashers.*

2. Turn the ignition to OFF. The 4-way flashers will continue for two hours or until the operation is cancelled by the rider.

3. To cancel, turn the ignition to ACC or ON and press the warning triangle above the electric starter switch.

## Engine OFF/RUN Switch

See Handlebar Controls. The engine OFF/RUN switch (6) turns the engine power on or off. The engine OFF/RUN switch is located on the right handlebar control. Push the top portion of the engine OFF/RUN switch to turn off engine power and shut the engine off. Push the bottom portion of the engine OFF/RUN switch to enable engine start and run.

*NOTES:*

- *The engine OFF/RUN switch must be in the RUN position to start or operate the engine.*
- *The engine OFF/RUN switch should be used to shut the engine off.*

1. To shut the engine off, push the top of the OFF/RUN switch to the OFF position.

2. See Ignition Switch: Softail Models (Except FXS and FXSB). Turn the ignition switch to the OFF position to turn the electric power completely OFF.

## Throttle Control Grip

See Handlebar Controls. The throttle control grip (8) is located on the right handlebar control and is operated with the right hand.

To reduce rider fatigue on long trips, a spring-loaded throttle friction adjustment screw (10) is located at the bottom of the throttle grip clamp on non-cruise equipped models.

1. Slowly turn throttle control grip clockwise (toward the front of the motorcycle) to close the throttle (decelerate).

2. Slowly turn throttle control grip counterclockwise (toward rear of motorcycle) to open the throttle (accelerate).

**⚠WARNING**

**Do not tighten throttle friction adjustment screw to the point where the engine will not return to idle automatically. Over-tightening can lead to loss of vehicle control, which could result in death or serious injury. (00031b)**

3. Loosen the throttle friction adjustment screw so the throttle returns to the idle position when the hand is removed from the grip.

4. Screw the throttle adjustment screw in to increase friction on the grip. This provides a damping effect on throttle motion.

*NOTE:*

*The throttle friction adjustment screw should not be used under normal stop and go operating conditions.*

## Clutch Hand Lever

**⚠WARNING**

**Do not position fingers between hand control lever and handlebar grip. Improper hand positioning can impair control lever operation and cause loss of vehicle control, which could result in death or serious injury. (00032a)**

See Handlebar Controls. The clutch hand lever (1) is located on the left handlebar and is operated with the fingers of the left hand.

1. Slowly pull clutch hand lever in against handlebar grip to fully disengage clutch.
2. Shift to first gear using the gear shifter lever. See Gear Shift Lever.
3. Slowly release the clutch hand lever to engage clutch.

A clutch switch is incorporated into the left handlebar switch assembly. It enables the rider to start the vehicle in any gear (or in neutral) as long as the clutch lever is pulled in. If the clutch is not disengaged and the vehicle is in gear, the vehicle will not start.

## HORN/TRIP Switch

**HORN:** See Handlebar Controls. The horn is operated by pressing on the HORN switch (2) located on the left handlebar control. The horn can be activated for up to 10 seconds at a time. If the horn switch is held for a longer period, the horn will automatically deactivate.

**TRIP:** The TRIP switch activates the trip odometers and is used to activate the odometer display to scroll through different screens of the display. With the ignition switch in OFF, the trip switch can activate time or odometer displays.

## Headlamp Dimmer Switch

See Handlebar Controls. The headlamp dimmer switch (3) is located on the left handlebar.

**High beam:** Press the top of the switch to activate the high beam. The (blue) high beam indicator lamp in the speedometer will be lit when the high beam is on.

**Low beam:** Press the bottom of the switch to activate the low beam.

**Flash to pass:** Press and hold the bottom of the switch to flash the high beam lamp.

## Turn Signal Switches

See Handlebar Controls. Each handlebar control group contains a turn signal switch.

- The right turn signal switch (9) operates the right front and right rear flashing lamps.
- The left turn signal switch (4) operates the left front and left rear flashing lamps.

*NOTE:*

*Front turn signal lamps also function as running lamps. Due to local regulations, this feature may*

*not be available in all locations.*

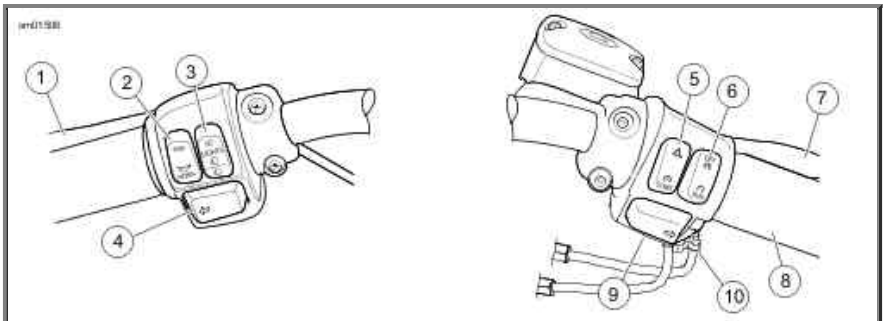


1. Clutch hand lever
2. Horn/trip switch
3. Headlamp dimmer switch
4. Left turn signal switch
5. Electric starter/hazard warning switch
6. Engine off/run switch
7. Brake hand lever
8. Throttle control grip
9. Right turn signal switch
10. Friction adjustment screw

**Handlebar Controls**

### Turn Signal Switch Operation

## Operating

Press and release the left or right turn signal switch to activate the turn signal lamps. The lamps flash until they are automatically canceled or manually canceled by the rider.

*NOTE:*

*If a turn signal indicator flashes rapidly, a turn signal bulb is not operating. Exercise caution and use hand signals. Replace defective components at earliest opportunity.*

## Automatic Canceling

The turn signal lamps automatically cancel when a full turn has been detected (based on vehicle speed, vehicle acceleration, and turn completion).

The lamps also cancel if the turn signal has been activated for a prolonged period while the vehicle speed is greater than 7 mph 11 km/h . If the motorcycle is stopped or moving slower than this speed, the turn signal continues flashing.

## Manual Canceling

To cancel the turn signal, press and release the turn signal switch a second time.

To activate the opposite turn signal, press and release the turn signal switch for the new direction. The first turn signal cancels and the opposite turn signal lamps begin flashing.

### Instruments

## Speedometer

**⚠WARNING**

**Travel at speeds appropriate for road and conditions and**

**Travel at speeds appropriate for road and conditions and never travel faster than posted speed limit. Excessive speed can cause loss of vehicle control, which could result in death or serious injury. (00008a)**

See Speedometer/Odometer/Tachometer (Typical). The speedometer registers miles per hour (U.S. models only) or kilometers per hour (international models only).

Instrument backlighting activates after a slight delay. The backlighting may briefly fluctuate when ambient lighting changes (such as going through a tunnel).

## Odometer

Pressing the TRIP switch with the ignition switch in any position will activate the odometer reading.

The odometer window in the speedometer face also provides the following selectable displays:

- Odometer
- Trip odometer A
- Trip odometer B
- Fuel range
- Time
- Gear number and tachometer

Press and release the TRIP switch to cycle through the displays.

## Trip Odometers A and B

To check mileage or to reset trip odometers, the ignition switch must be in the ACC or IGN position. Press and release the TRIP switch until the desired trip odometer register (A or B) is displayed. An A or B in the upper left of the display window identifies the trip odometer.

To reset or zero trip odometers, have desired (A or B) odometer in display window. Press the TRIP switch and hold for approximately three seconds. The trip odometer will be reset to zero.

## Gear Selection/Tachometer

Press and release the TRIP switch to cycle through the odometer displays to select the gear number and the tachometer display. The odometer shows the current gear (1-6) and the engine speed in revolutions per minute (RPM).

When the transmission is in neutral or the clutch lever is pulled in, the gear number will be blank.

## Time

Press and release the TRIP switch to cycle through the odometer window displays to the time display. To set the time:

1. Turn the ignition switch to ACC or IGN.

2. See Speedometer/Odometer/Tachometer (Typical). Press and release the TRIP switch until time (hour and minutes) is displayed. Press and hold the TRIP switch until 12HR begins to blink in the speedometer display window. Release the switch.

3. Press and release the TRIP switch once to advance to a blinking 24HR or military style time display. Each time you press and release the switch, the display will switch between 12HR and 24HR.

4. When the desired time style is displayed, press and hold the TRIP switch for until the hours

display is blinking.

5. Press and release the TRIP switch repeatedly to advance the hours.
6. When the correct hour is displayed, press and hold the TRIP switch until the minutes display starts blinking.
7. Press and release the TRIP switch repeatedly to advance the minutes display.
8. When the correct minutes are displayed, press and hold the TRIP switch until the display advances to the selection of AM or PM.

   *NOTE:*

   *AM or PM will not appear in the regular time display. The motorcycle uses the selection for diagnostic purposes.*

9. In the 12HR display, AM or PM will appear flashing. Select AM or PM with the TRIP switch and press and hold the switch for five seconds.
10. Turn the ignition switch OFF.

## Fuel Range

The fuel range display shows the approximate mileage available with the amount of fuel left in the fuel tank.

With the ignition switch in the ACC or IGN position, press the TRIP switch until fuel range is displayed, as indicated by the letter "R" in the left side of the display. The calculated remaining distance (miles or kilometers) to empty is displayed, based on the amount of fuel in tank. Range can be accessed at any time using the TRIP switch.

## Low Fuel Warning

When the low fuel warning lamp illuminates, the fuel range feature will automatically be displayed in the odometer window. The rider can press the TRIP switch to return to the cycle of odometer displays. The fuel range warning will not be repeated until the ignition switch is cycled off and back on.

After the fuel range drops to 10 mi 16 km remaining, the fuel range display will scroll "LO RNG" to indicate that the motorcycle will shortly run out of fuel.

Resetting the low fuel warning lamp and range requires an ignition cycle change. Always turn the ignition switch to OFF when fueling.

**Disable:** To disable this function while riding, press and hold the TRIP switch while in the fuel range display mode. Automatic range pop-up feature will show that it is disabled by blinking twice.

**Enable:** To enable the automatic low fuel warning range display, press and hold the TRIP switch. The low fuel range will blink once when the automatic feature is enabled.

*NOTE:*

- *When the low fuel warning lamp turns on, the fuel level is low. Refuel as soon as possible.*
- *The range display is only updated when the vehicle is moving.*
- *The automatic fuel range display is enabled after the ignition is turned OFF-IGN.*

## Tip Indicator

**⚠WARNING**

**If tip occurs, check all controls for proper operation. Restricted control movement can adversely affect the**

**performance of the brakes, clutch or ability to shift, which could result in loss of vehicle control and death or serious injury. (00350a)**

Should motorcycle be tipped over, the word "tIP" will appear in the odometer window. The engine will not start until reset.

**Reset:** To reset, set the motorcycle upright and turn the ignition switch OFF-IGN.

## No Fob Message

If the motorcycle is equipped with a security system and is driven off leaving the fob behind, 'NO FOB' will be displayed in the odometer window as soon as the motorcycle starts moving. The display will last for 10 seconds as a reminder to retrieve the fob.

With the motorcycle separated from its assigned fob, the motorcycle can only be started with a manual PIN entry to disarm the security system. See Arming and Disarming.

## Sidestand Message

On international (HDI) models, a 'SidEstAnd' message is displayed if the motorcycle is placed into gear while the jiffy stand is down. See Jiffy Stand Interlock: International Models for details on this feature.

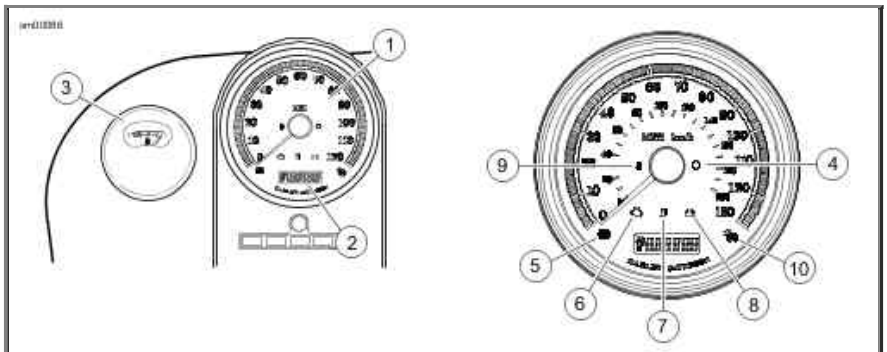


1. Speedometer
2. Odometer/tachometer
3. Fuel gauge (equipped models)
4. Electrical system lamp (security system)
5. Anti-Lock Brake System (ABS) lamp
6. Check engine lamp
7. Low fuel warning lamp
8. Battery lamp
9. Sixth gear indicator
10. Cruise control enabled lamp (not used)

**Speedometer/Odometer/Tachometer (Typical)**

### Instrument Lamps

## Check Engine Lamp

See Speedometer/Odometer/Tachometer (Typical). The check engine lamp (6) is located inside the instrument cluster. Its purpose is to indicate whether or not the engine/engine management system is operating normally. The check engine lamp color is amber.

The check engine lamp normally comes on when the ignition is first turned on and remains on for approximately 4 seconds, as the engine management system runs a series of self-diagnostics.

If the check engine lamp comes on at any other time, see a Harley-Davidson dealer.

## Low Fuel Lamp

**Solid:** See Speedometer/Odometer/Tachometer (Typical). The amber low fuel warning lamp (7) illuminates when the gasoline in the tank reaches the low fuel level. Refer to Capacities.

**Flashing:** If the low fuel lamp flashes continuously, it indicates the presence of a fault in the fuel level circuitry. See a Harley-Davidson dealer.

## Sixth Gear Lamp

See Speedometer/Odometer/Tachometer (Typical). The sixth gear lamp (9) indicates when the transmission is in sixth gear.

## Battery Discharge Lamp

See Speedometer/Odometer/Tachometer (Typical). The battery lamp (8) indicates either overcharging or undercharging of the battery. Refer to Battery.

## Electrical System Lamp

See Speedometer/Odometer/Tachometer (Typical). On motorcycles equipped with the security system, the electrical system lamp flashes when the security system is armed. Refer to Harley-Davidson Smart Security System.

If the electrical system lamp remains lit after the security system is disarmed, first check all the motorcycle's lighting for a failed bulb and replace as required. Otherwise, if all bulbs are operating and the electrical system lamp remains lit, see a Harley-Davidson dealer.

## Anti-Lock Brake System (ABS) Lamp

**Flashing:** See Speedometer/Odometer/Tachometer (Typical). On ABS equipped models, the amber ABS indicator lamp (5) flashes when the ignition switch is turned to IGN to indicate that the system is operational. It continues to flash until motorcycle speed exceeds 3 mph 5 km/h .

**Solid:** Continuous illumination of the lamp indicates a malfunctioning ABS system. The ABS is disabled and the brakes are operating as if they were non-ABS brakes. See a Harley-Davidson dealer for service.

**⚠WARNING**

**If ABS lamp remains on continuously, the ABS is not operating. The standard brake system is operational, but wheel lock up can occur. Contact a Harley-Davidson Dealer to have ABS repaired. A locked wheel will skid and can cause loss of vehicle control, which could result in death or serious injury. (00361a)**

### Indicator Lamps

See Indicator Lamps (Typical). Five indicator lamps are provided in the instrument panel.

## Turn Indicator Lamps

The turn indicators flash when a turn signal is activated. When the 4-way hazard flashers are operating, both turn indicators will flash simultaneously.

## Headlamp High Beam Indicator Lamp

The headlamp high beam indicator lamp is lit when the high beam or flash to pass switch is activated.

## Neutral Indicator Lamp

The neutral indicator lamp is lit when the transmission is in neutral gear.

## Oil Pressure Indicator Lamp

The oil pressure indicator lamp is lit when sufficient oil is not circulating through the engine.

The lamp is lit when the ignition is turned on prior to starting engine. With engine running, lamp should be off when engine speed is above idle.

Circumstances that could cause the oil indicator lamp to illuminate:

- Low oil level. Stop engine immediately. Add oil.
- Diluted oil. Change oil as soon as possible.
- Incorrect oil for the operating temperature. Change oil as soon as possible.
- See Troubleshooting for further information.

**CAUTION**

**If the oil pressure indicator lamp remains lit, always check the oil supply first. If the oil supply is normal and the lamp is still lit, stop the engine at once and do not ride further until the trouble is located and the necessary repairs are made. Failure to do so may result in engine damage. (00157a)**

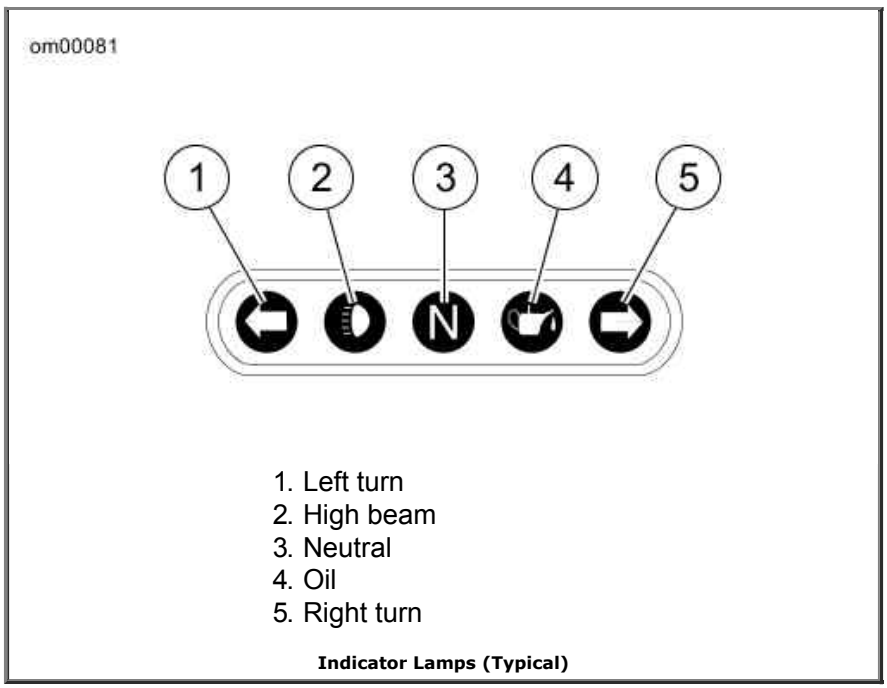


**Indicator Lamps (Typical)**

### Gear Shift Lever

## Location

See Shift Lever and Shift Pattern. The gear shift lever is located on the left side of the

motorcycle and is operated with the left foot. The shift lever changes gears in a sequential six-speed transmission.

## Shift Pattern

**CAUTION**

**The clutch must be fully disengaged before attempting a gear shift. Failure to fully disengage the clutch can result in equipment damage. (00182a)**

See Shift Lever and Shift Pattern. Each gear must be engaged in sequence. Lift the gear shift lever to upshift and press the lever to downshift. After each gear change, release the gear shift lever to allow it to return to its resting position. See Shifting Gears.

## Neutral

Neutral is located between first and second gear. The transmission can be shifted to neutral from either first or second gear. Lift or press the gear shift lever 1/2 of its stroke. In neutral, the indicator lamp will light.

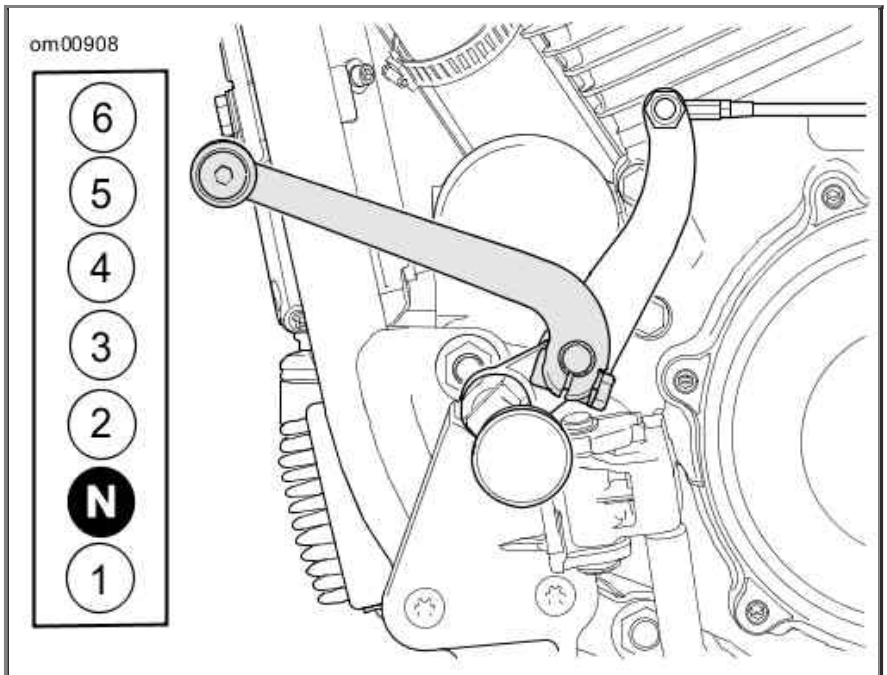


**Shift Lever and Shift Pattern**

### Heel-Toe Foot Shifter

See Heel-Toe Foot Shift Lever. Some motorcycles have a heel-toe shifter lever. With this shift lever, upshifts can be made with the heel of the left foot. Downshifts can be made with the toe.

- Pushing toe shift lever all the way down (full stroke) shifts the transmission to the next lower gear.
- Lifting the toe shift lever all the way up (full stroke) shifts the transmission into the next higher gear.
- Pushing the heel shift lever all the way down (full stroke) shifts the transmission to the next higher gear.

Release the foot shift lever after each gear change to allow the lever to return to its center position before another gear change.

*NOTE:*

*The heel shifter height can be adjusted for rider preference. Verify that full lever movement is available after adjustment. See the service manual.*

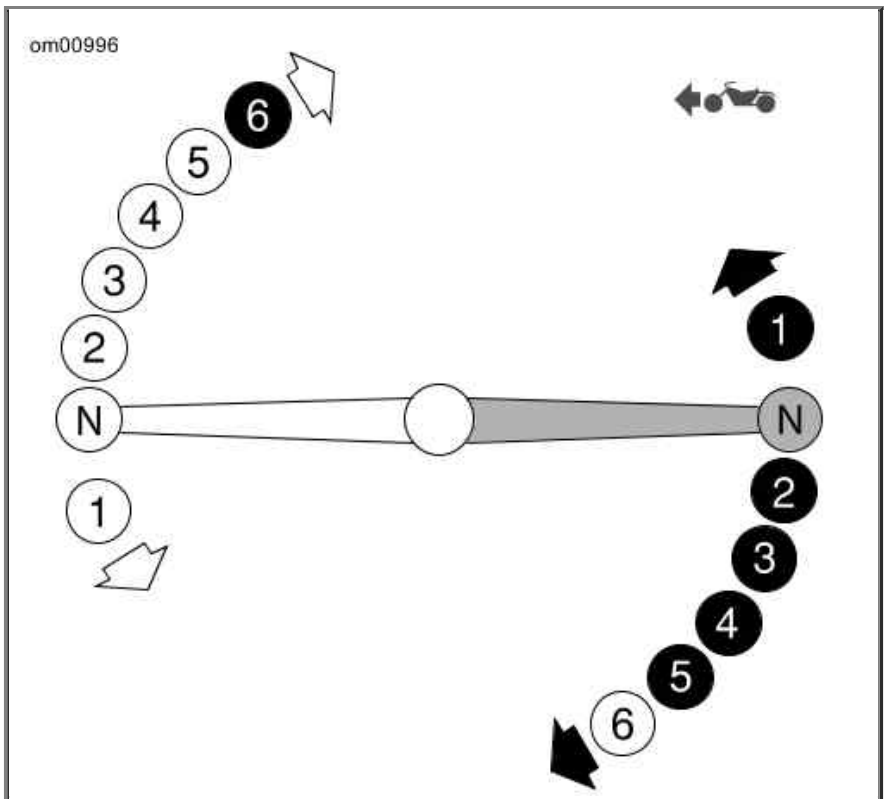

**Heel-Toe Foot Shift Lever**

### Anti-Lock Brake System (ABS)

## Identification

See Hydraulic Control Unit. Models that are equipped with the ABS option can be identified by the presence of a hydraulic control unit as shown.

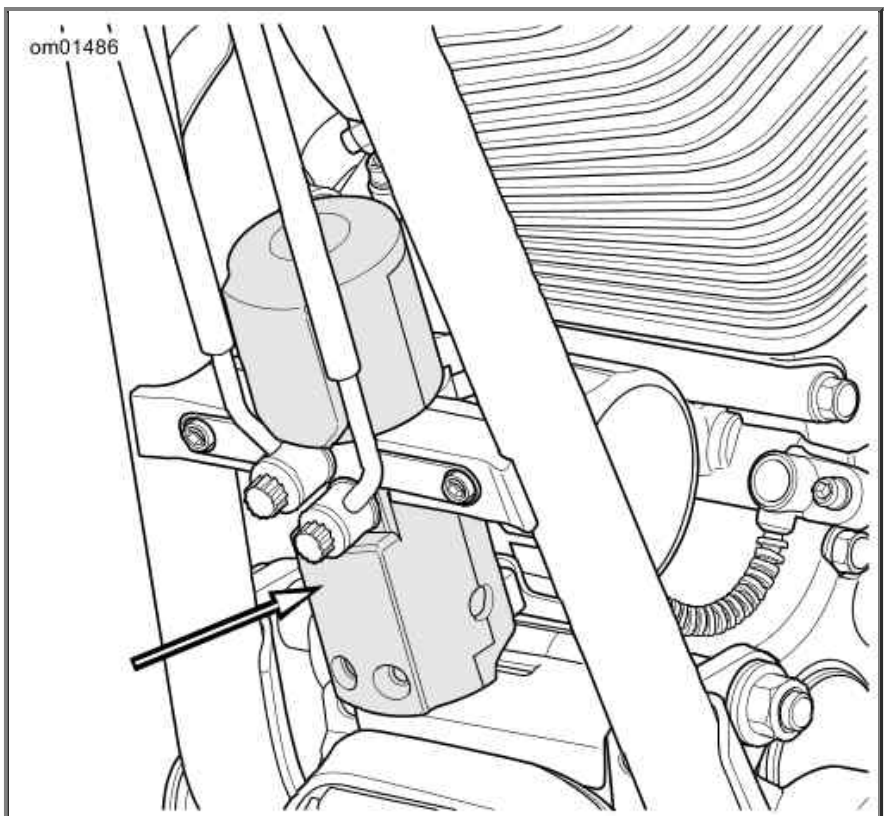

**Hydraulic Control Unit**

## General

The rear brake pedal controls the rear wheel brake and is located on the motorcycle's right side. Operate the rear brake pedal with the right foot.

The front brake hand lever controls the front wheel brake and is located on the right handlebar. Operate the hand lever with the fingers of the right hand.

**⚠WARNING**

**Do not position fingers between hand control lever and handlebar grip. Improper hand positioning can impair control lever operation and cause loss of vehicle control, which could result in death or serious injury. (00032a)**

Some models are equipped with an anti-lock braking system.

## Non-ABS Brake System

Apply brakes uniformly and evenly to prevent wheels from locking. Use front and rear brakes equally for best results.

**⚠WARNING**

**Do not apply brake strongly enough to lock the wheel. A locked wheel will skid and can cause loss of vehicle control, which could result in death or serious injury. (00053a)**

## Anti-Lock Brake System (ABS)

Harley-Davidson's Anti-Lock Brake System assists the rider in maintaining control when braking in a straight-line emergency situation. ABS operates independently on front and rear brakes to keep the wheels rolling and prevent uncontrolled wheel lock-ups either on dry pavement or on slick surfaces such as gravel, leaves or when riding in wet conditions.

## ABS: How It Works

The ABS monitors sensors at the front and rear wheels to determine wheel speed. If the system detects one or both wheels are slowing down too quickly, which indicates they are close to locking, or if the deceleration rate does not match a criteria stored in memory, the ABS reacts. The system rapidly opens and closes valves to modulate the brake caliper pressure utilizing only the brake lever/pedal pressure being applied by the rider. During ABS activation, the system provides the electronic equivalent of manually pumping the brakes and is capable of cycling up to seven times per second.

The rider will recognize ABS activation by the slight pulsing sensation in the hand lever or the rear brake pedal. The pulsing sensation may also be accompanied by a clicking sound from the ABS module. Both are the result of normal operation. Refer to ABS Symptoms and Conditions.

## ABS: How To Use

While an advantage in emergency braking, ABS is not a substitute for safe riding. The safest way

to stop a motorcycle is upright with both wheels straight.

Harley-Davidson ABS is a manual assist system. When in an emergency stopping situation, maintain pressure on the brakes through all ABS events. Do not modulate or "pump" the brake controls. The wheels won't lock until the end of the stop when motorcycle speed reaches approximately 4 mph 6 km/h and ABS is no longer needed.

**⚠WARNING**

**ABS cannot prevent lockup of rear wheel due to engine braking. ABS will not aid in cornering or on loose/uneven surfaces. A locked wheel will skid and can cause loss of vehicle control, which could result in death or serious injury. (00362a)**

More information is available at www.harley-davidson.com/abs.

## ABS: Tires and Wheels

ABS motorcycles must always use Harley-Davidson specified tires and wheels. The ABS monitors the rotational speed of the wheels through individual wheel speed sensors. Changing to different diameter wheels or different sized tires can alter the rotational speed. This can upset the calibration of the ABS and have an adverse effect on its ability to detect and prevent uncontrolled wheel lockups. Operating at tire pressures other than those specified in Specified Tires can reduce ABS braking performance.

**ABS Symptoms and Conditions**

| SYMPTOM | CONDITION |
|---|---|
| Pulsing brake lever or pedal during an ABS event | Normal condition. |
| Clicking sound during an ABS event | Normal condition. |
| ABS lamp flashing | Normal condition - motorcycle turned on - speed under 3 mph 5 km/h . |
| "Surge" sensation while braking | Normal condition - most noticeable when braking with one brake (front only or rear only). Result of a reduction in deceleration which can be caused by cracks or bumps in road, engine braking (high engine RPMs causing the rear wheel to slow down), hard braking at slow speeds, and other conditions. This is due to ABS modulating caliper brake pressure to prevent uncontrolled wheel lock. |
| Temporarily stiff rear brake pedal | Normal condition - engine braking (high engine RPMs causing the rear wheel to slow down) or down shifting can activate ABS. If applying the rear brake at the same time or immediately after, the ABS may be closing a valve to prevent pressure to the rear brake. This is due to ABS modulating caliper brake pressure to prevent uncontrolled wheel lock. |
| Tire chirp | Normal condition - depending on surface, tire can chirp without locking the wheel. |
| Black mark on pavement | Normal condition - depending on surface, tire can leave a black mark without locking the wheel. |
| Wheel lock at low speed | Normal condition - ABS will not activate on front wheel below 3 mph 5 km/h or on rear wheel below 5 mph 8 km/h . |

## Jiffy Stand

**⚠WARNING**

**Always park motorcycle on a level, firm surface. An unbalanced motorcycle can fall over, which could result in death or serious injury. (00039a)**

The jiffy stand is located on the left side of the motorcycle and swings outward to support the motorcycle for parking.

**⚠WARNING**

**The jiffy stand locks when placed in the full forward (down) position with vehicle weight on it. If the jiffy stand is not in the full forward (down) position with vehicle weight on it, the vehicle can fall over which could result in death or serious injury. (00006a)**

**⚠WARNING**

**Be sure jiffy stand is fully retracted before riding. If jiffy stand is not fully retracted, it can contact the road surface causing a loss of vehicle control, which could result in death or serious injury. (00007a)**

## Jiffy Stand Interlock: International Models

Some international models are equipped with a jiffy stand interlock feature.

The vehicle will start and run with the jiffy stand down while the transmission is in neutral. If the jiffy stand is down, the transmission is in gear, and the clutch is released, the vehicle will stall. The message "SidE StAnd" will scroll across the odometer to indicate this to the rider. Raising the jiffy stand (or putting the transmission in neutral) will permit the engine to run and clear the message.

If the jiffy stand falls out of the fully retracted position while riding at speeds greater than 10 mph 15 km/h , then the jiffy stand interlock system will maintain engine operation and alert the rider about this by illuminating the indicators (flash twice) and scroll the message "SidE StAnd" across the odometer. The message will remain until the system detects the jiffy stand in the fully retracted position again. The rider may continue to operate the vehicle while in this mode.

The rider may clear the text messages at any time by pressing the TRIP switch once while the vehicle is powered up.

## Rear View Mirrors

**⚠WARNING**

**Objects in mirrors are closer than they appear. Use caution when judging distance of objects in mirrors. Failure to judge correct distances could result in death or serious injury. (00033a)**

Your vehicle is equipped with two convex rear view mirrors.

This type of mirror is designed to give a much wider view to the rear than a flat mirror. However, cars and other objects seen in this type of mirror will look smaller and farther away than they actually are.

- Use caution when judging the size or relative distance of objects seen in rear view mirrors.

- Always adjust the rear view mirrors to clearly reflect the area behind the motorcycle before riding.

*NOTE:*

*Adjust mirrors so you can see a small portion of your shoulders in each mirror. This will help you establish the relative distance of vehicles to the rear of your motorcycle.*

**Fuel Filler Cap**

## Fuel Gauge

See Fuel Tank. Some models have a fuel gauge on the left side of the tank. The fuel gauge is not removable.

The fuel range feature may also be used to determine the remaining fuel. See Instruments.

## Fuel Filler Cap

**⚠WARNING**

**Avoid spills. Slowly remove filler cap. Do not fill above bottom of filler neck insert, leaving air space for fuel expansion. Secure filler cap after refueling. Gasoline is extremely flammable and highly explosive, which could result in death or serious injury. (00028a)**

See Fuel Tank. To remove, turn fuel filler cap counterclockwise. The cap turns approximately three-quarters of a turn before it begins to loosen.

To install, turn fuel filler cap clockwise until it clicks. The ratchet action of the cap prevents overtightening.

See SAFE OPERATING RULES section and review safety procedures listed below.

**⚠WARNING**

**Do not store motorcycle with gasoline in tank within the home or garage where open flames, pilot lights, sparks or electric motors are present. Gasoline is extremely flammable and highly explosive, which could result in death or serious injury. (00003a)**

**⚠WARNING**

**Do not use aftermarket fuel caps. Aftermarket fuel caps may fit improperly and leak, which could lead to death or serious injury. See a Harley-Davidson dealer for approved fuel caps. (00034a)**

**CAUTION**

**Do not spill fuel onto the motorcycle while refueling. Immediately wipe up fuel spills on your motorcycle. Fuel can cause damage to cosmetic surfaces. (00147b)**

**CAUTION**

**Use only unleaded fuel in catalytic converter-equipped**

**Use only unleaded fuel in catalytic converter-equipped motorcycles. Using leaded fuel will damage the emission control system. (00150b)**

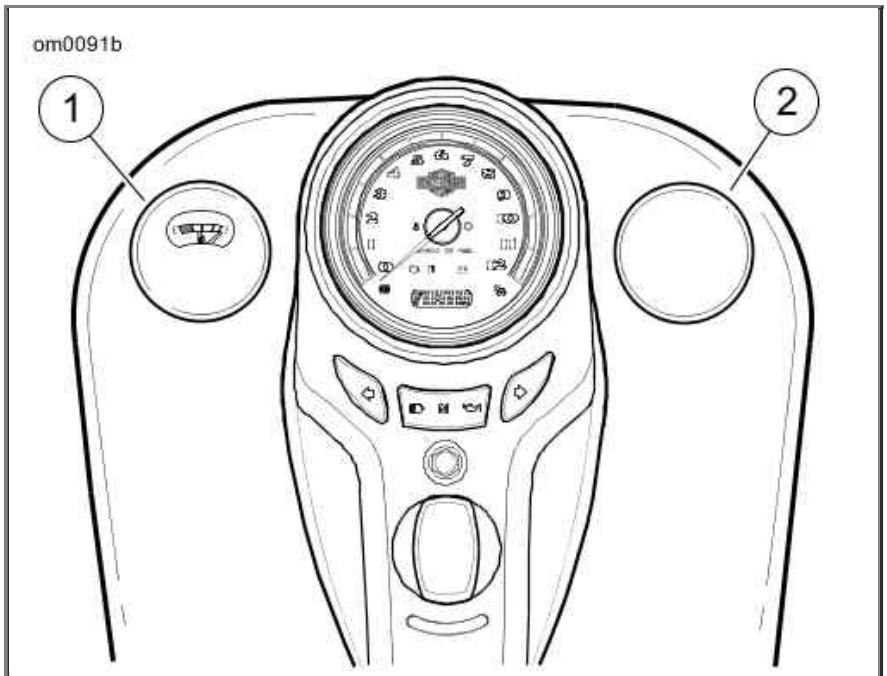


1. Fuel gauge (equipped models)
2. Fuel filler cap

**Fuel Tank**

## Fork Lock

**CAUTION**

**Protect your vehicle against theft. Failure to lock the motorcycle after parking could result in theft and/or equipment damage. (00151b)**

**⚠WARNING**

**Do not operate vehicle with forks locked. Locking the forks restricts the vehicle's turning ability, which could result in death or serious injury. (00035a)**

See Fork Lock. The fork lock is incorporated in the steering head on the right side.

Using the fork lock immediately after parking your motorcycle will discourage unauthorized use or theft when parking your motorcycle.

## To Lock Fork

1. Turn fork to full left position.
2. Insert key into fork lock.
3. Push in on fork lock and turn to left position.
4. Remove key.

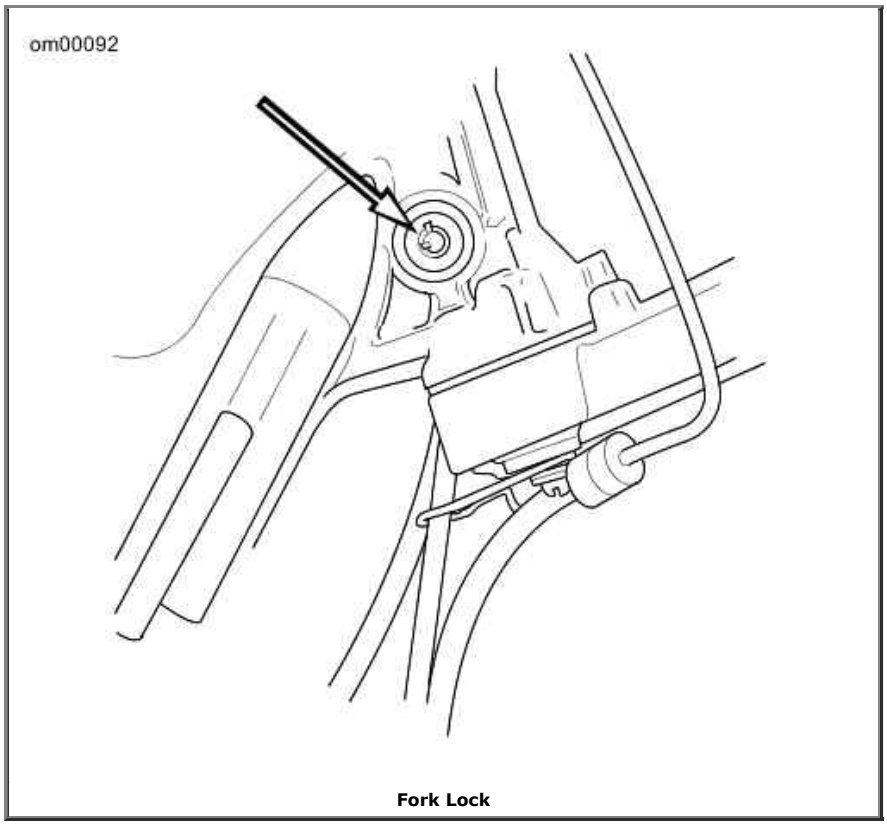


**Fork Lock**

### Shock Absorbers

## Calculate Number of Turns

Softail models feature adjustable rear shock absorbers located under the motorcycle. The rear shock spring preload is adjusted to the total load or may be varied to suit your own personal comfort.

*NOTE:*

*Refer to Harley-Davidson VIN Breakdown: 2013 Softail Models. To determine the motorcycle configuration for an FLS or FLSTFB, check the configuration/calibration character stamped on the VIN.*

1. Identify the number of preload turns for the weight of the rider.
   a. **FLSTC, FLSTF, FXST, FLS (APC/AUS), FLSTFB (HDI/ENG/IND/BRZ):** Refer to Shock Preload: FLSTC, FLSTF, FXST, FLS (APC/AUS), FLSTFB (HDI/ENG/IND/BRZ).
   b. **FXS, FXSB, FLSTN, FLS (all except APC/AUS), FLSTFB (all except HDI/ENG/IND/BRZ):** Refer to Shock Preload: FXS, FXSB, FLSTN, FLS (all except APC/AUS), FLSTFB (all except HDI/ENG/IND/BRZ).
2. Calculate the number of turns for the intended passenger and cargo.
3. Add the number of turns for the rider to the number of additional turns required for the total weight of the passenger and/or cargo.

**Shock Preload: FLSTC, FLSTF, FXST, FLS (APC/AUS), FLSTFB (HDI/ENG/IND/BRZ)**

| RIDER WEIGHT* | TURNS** |
|---|---|
| Less than 165 lb 75 kg | 0 |
| 165-220 lb 75-100 kg | 1 |
| 220-275 lb 100-125 kg | 2 |
| 275-335 lb 125-152 kg | 3 |
| 335-395 lb 152-179 kg | 4 |

| | |
|---|---|
| 335-395 lb 152-179 kg | 4 |
| 395 lb 179 kg to maximum added weight allowed (refer to Weights: FLSTC, FLSTF, FLSTFB and FLSTN and Weights: FLS, FXST, FXS and FXSB) | 5 |
| *__Passenger/Cargo:__ For every 40 lb 18.1 kg increase preload one turn.<br><br>**Turns out (counterclockwise) from minimum preload. | |

**Shock Preload: FXS, FXSB, FLSTN, FLS (all except APC/AUS), FLSTFB (all except HDI/ENG/IND/BRZ)**

| RIDER WEIGHT* | TURNS** |
|---|---|
| Less than 185 lb 84 kg | 0 |
| 185-235 lb 84-107 kg | 1 |
| 235-285 lb 107-129 kg | 2 |
| 285-340 lb 129-154 kg | 3 |
| 340 lb 154 kg to maximum added weight allowed (refer to Weights: FLSTC, FLSTF, FLSTFB and FLSTN and Weights: FLS, FXST, FXS and FXSB) | 4 |
| *__Passenger/Cargo:__ For every 35 lb 15.8 kg increase preload one turn.<br><br>**Turns out (counterclockwise) from minimum preload. | |

## Adjustment

*NOTES:*

- *Adjust the shocks with the motorcycle resting on the jiffy stand.*
- *Adjust both shocks the same number of turns.*

1. See Shock Absorber Adjustment. Hold the shaft with a wrench on the flats of the shock shaft and loosen the jamnut (2).
2. Use the tangs of the SHOCK ADJUSTMENT SPANNER 94448-82B in the holes in the rear shock canister (1) to turn the canister clockwise until it stops. This is the minimum preload position.
3. Mark the face of the canister for reference.
4. Turn the canister counterclockwise the number of turns calculated for the total load.
5. Tighten the jamnut.

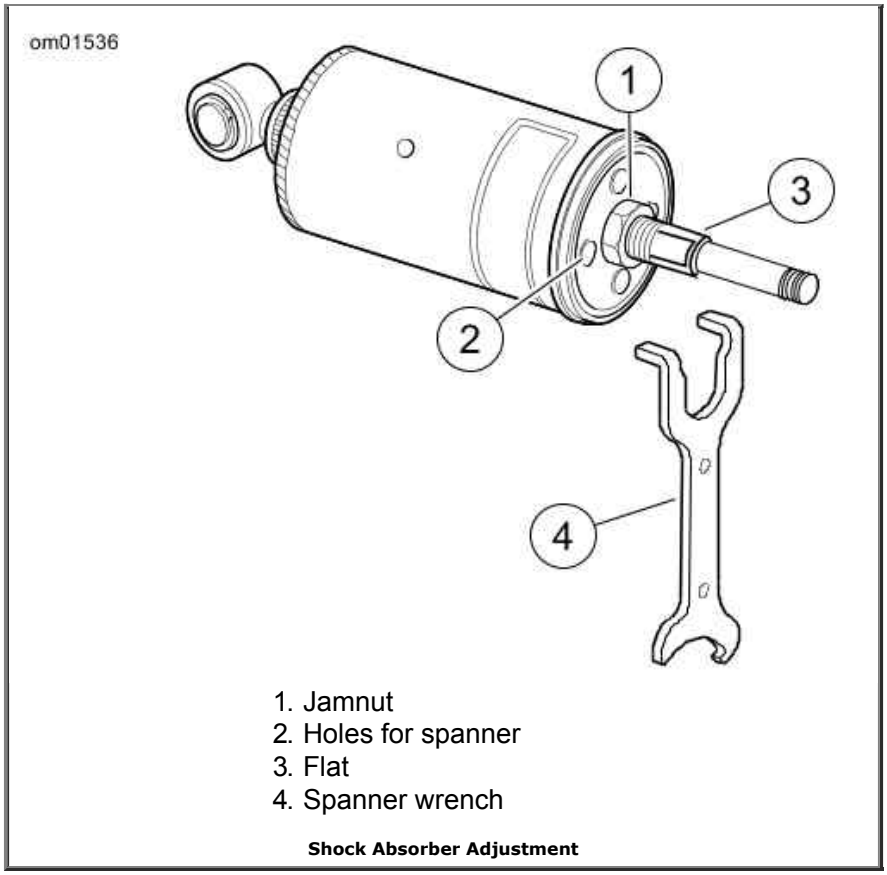


**Shock Absorber Adjustment**

### Saddlebags: FLSTC Models

**WARNING**

**See the Accessories and Cargo section in your owner's manual. Improper cargo loading or accessory installation can cause component failure and adversely affect stability, handling and performance, which could result in death or serious injury. (00021b)**

**CAUTION**

**Check that saddlebag frame(s) are fully seated and tightly secured with mounting hardware. Failure to do so could result in the saddlebags becoming detached and/or damaged. (00171b)**

## Removal

1. See Saddlebag Assembly: FLSTC Shown. Unbuckle the saddlebag straps.
2. Use one hand to support the saddlebag and another hand to remove the flanged locknuts from the saddlebag mounting bracket.
3. Remove flanged locknuts, washers, acorn nuts and the saddlebag from the fender support.

## Installation

1. See Saddlebag Assembly: FLSTC Shown. Align the saddlebag with the mounting holes on the fender support.
2. Push the mounting studs, washers and flanged locknuts through the saddlebag mounting

holes, saddlebag mounting bracket and fender support as shown.

3. Tighten fasteners to 120-144 in-lbs (13.6-16.3 Nm).
4. Buckle saddlebag straps.

**⚠WARNING**

**Do not allow passenger to use saddlebags as grab handles. Failure to use a grab strap, designed for passengers to hold onto when riding, could result in death or serious injury. (00081a)**

For proper saddlebag maintenance, see Leather and Vinyl Care.

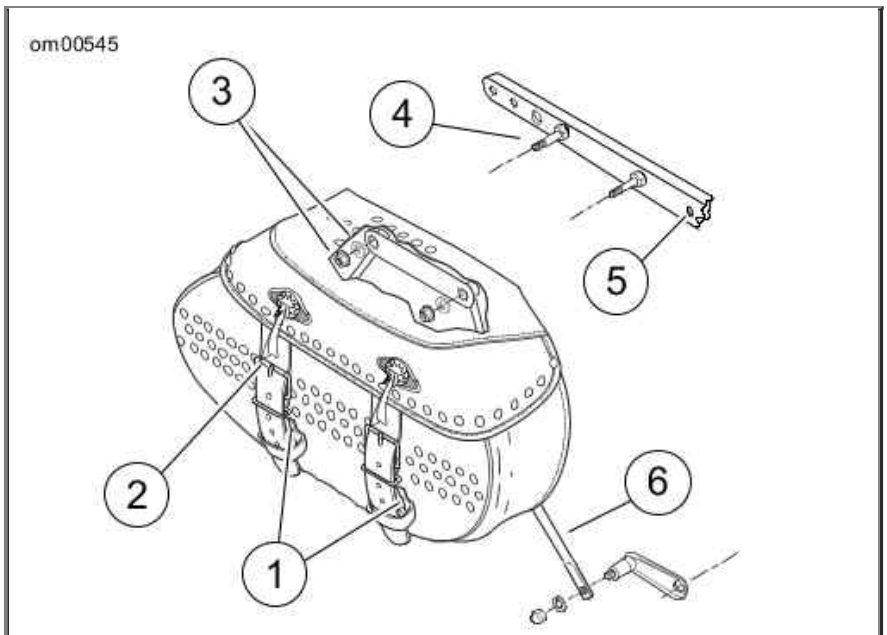


1. Quick disconnects
2. Buckle
3. Flanged locknuts and washers
4. Mounting studs
5. Fender support
6. Saddlebag mounting bracket

**Saddlebag Assembly: FLSTC Shown**

### Saddlebag Operation

## Opening

See Saddlebag Quick Disconnect. Some saddlebags have a quick disconnect feature. To use the quick disconnect strap feature:

1. Lift up the strap end to expose the quick release buckle.
2. Press on the lock tabs as shown.

*NOTE:*

*The straps may also be opened and closed using the buckle in a conventional manner.*

## Closing

1. Insert the male strap end into the receptacle on the bag.

2. Push until a positive click is felt.

**CAUTION**

**Check that saddlebag frame(s) are fully seated and tightly secured with mounting hardware. Failure to do so could result in the saddlebags becoming detached and/or damaged. (00171b)**

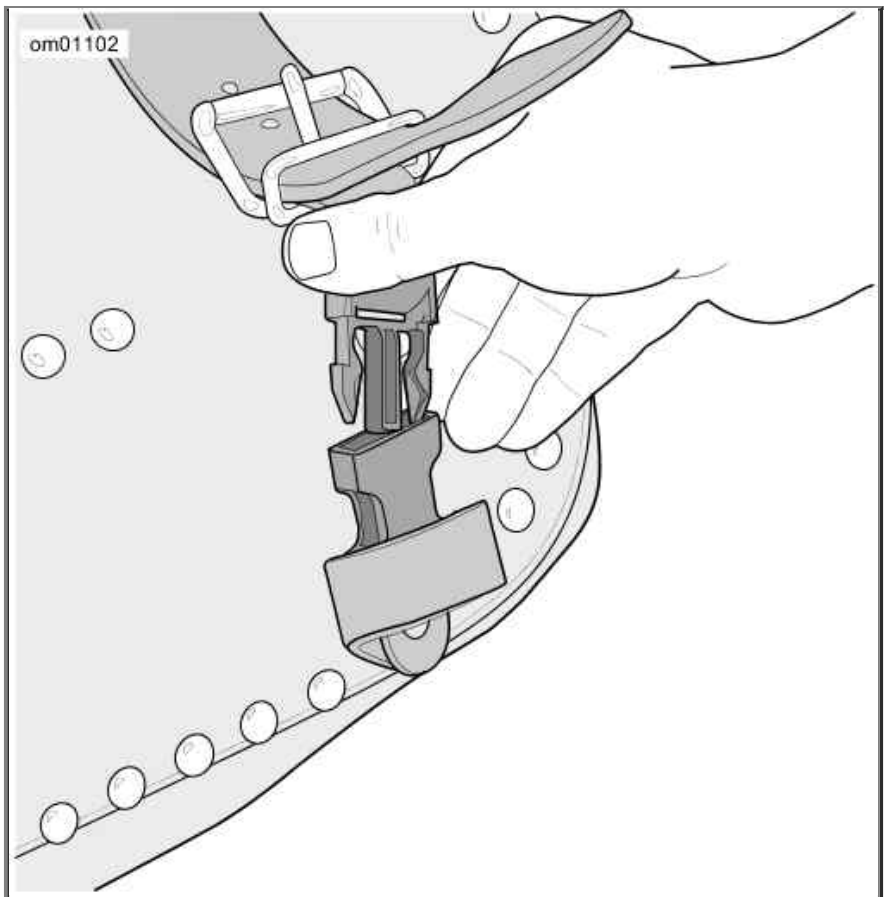


**Saddlebag Quick Disconnect**

### Windshield: FLSTC Models

## Removal

1. See Windshield Assembly. Insert your fingers into the wireform latch springs at either side of the windshield and move the TOP of the windshield assembly forward, until the TOP bracket notches slide away from the grommets.
2. Carefully lift the windshield bracket BOTTOM notches off the bottom grommets. Remove windshield.

## Installation

1. See Windshield Assembly. Insert your fingers into the wireform latch springs at either side of the windshield and slide the BOTTOM windshield bracket notches onto the bottom grommets.
2. Slide the TOP bracket notches onto the top grommets.

*NOTE:*

*For proper windshield maintenance, see Windshield Care.*

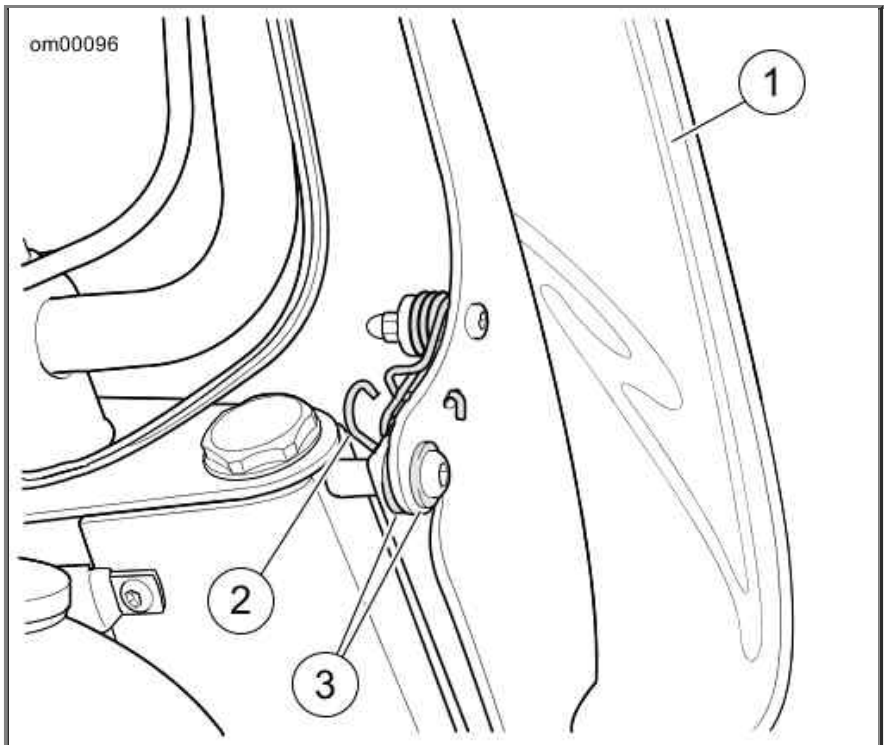


1. Windshield
2. Wireform latch spring
3. Grommet

**Windshield Assembly**

## Auxiliary/Fog Lamps: FLSTC/FLSTN Models

See Auxiliary/Fog Lamp Switch. The auxiliary/fog lamp switch is located on the left steering head panel. Turn on the auxiliary/fog lamps as needed.

When the headlamp is on high beam, the auxiliary/fog lamps turn off (except for Japan configuration motorcycles).

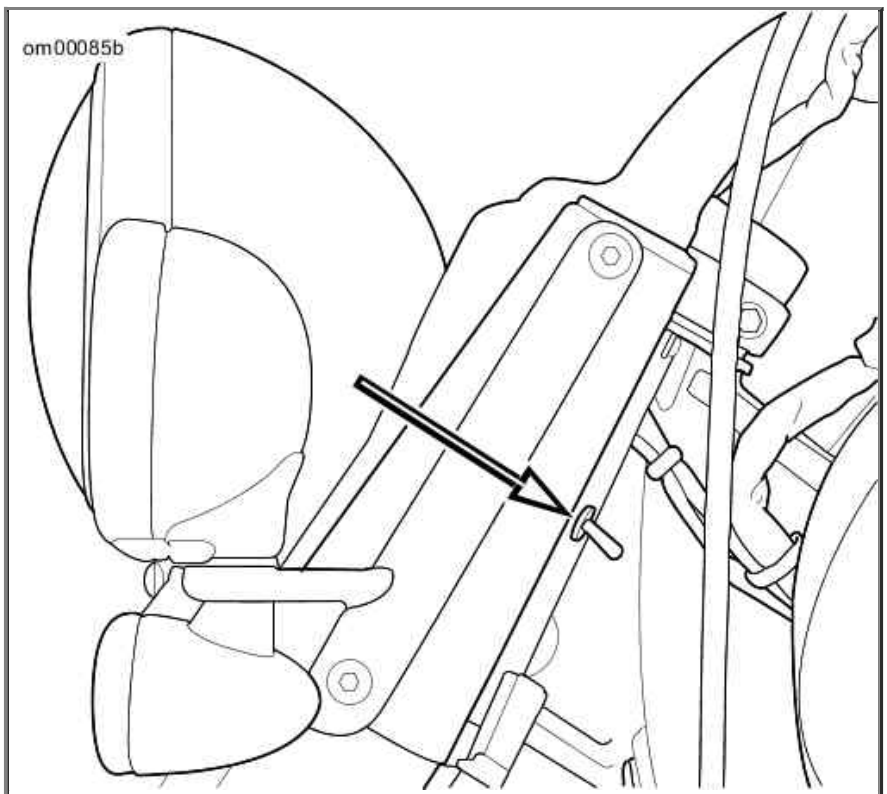


**Auxiliary/Fog Lamp Switch**

## Side-Mounted License Plate

See Side-Mounted License Plate Assembly. Some models are equipped with a side-mounted license plate assembly. The license plate must be in the extended position during operation. Due to local regulations, this feature may not be available in all locations.

The side-mounted license plate assembly includes an LED lamp module. If the LED lamp fails, see a Harley-Davidson dealer for assembly replacement.

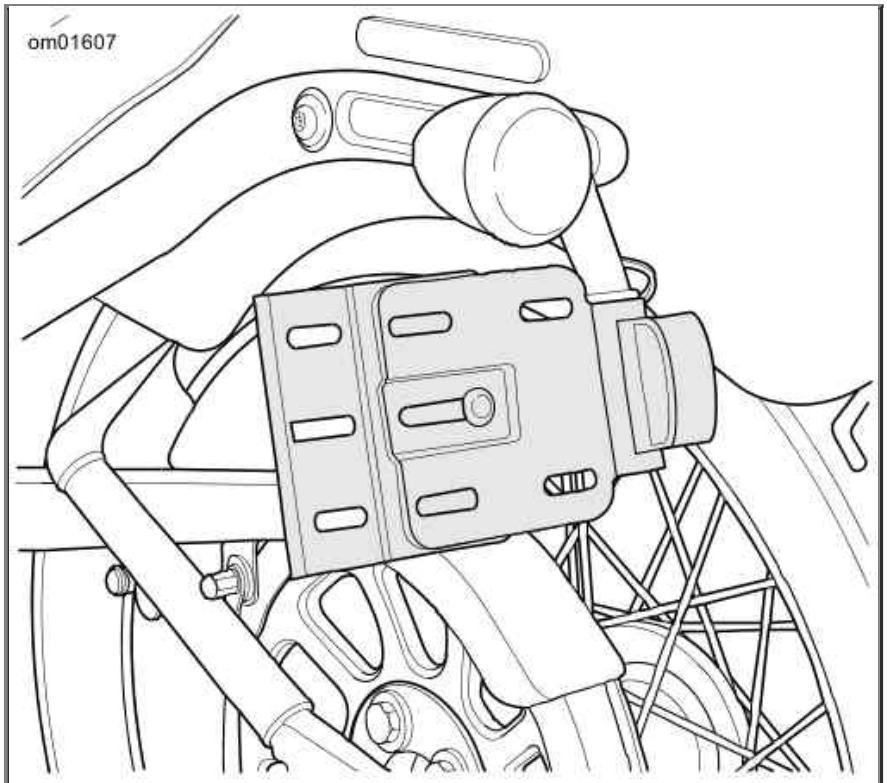


**Side-Mounted License Plate Assembly**

## Harley-Davidson Smart Security System

### Harley-Davidson Smart Security System

## Components

The Harley-Davidson Smart Security System consists of a control module, a hands-free antenna mounted on the motorcycle and a hands-free fob **carried** by the rider/passenger.

After parking the motorcycle, turn the ignition to OFF or ACC and the security system will automatically **arm** within five seconds. While armed, the starter and ignition are disabled and the rider may leave the motorcycle knowing that the module will disable the ignition if someone tampers with the ignition switch or activate an alarm if someone attempts to move the motorcycle.

If the fob is present, the module will automatically **disarm** when the ignition is turned to IGN or ACC.

*NOTES:*

- *If disconnecting power from the motorcycle battery, see Disconnecting Power to prevent the optional security system siren from sounding.*
- *Do not relocate the module or the antenna on the motorcycle.*

## Options

See a Harley-Davidson dealer or www.harley-davidson.com for security system options.

- Smart Siren II.
- Security Pager and Security Pager Receiver II.
- Replacement Fobs.

### FCC Regulations

FCC ID: L2C0027TR IC ID: 3432A-0027TR

FCC ID: L2C0028TR IC ID: 3432A-0028TR

This device complies with Part 15 of the FCC Rules and with RSS-210 of Industry Canada rules. Operation is subject to the following two conditions:

(1) This device may not cause harmful interference, and (2) This device must accept any interference received, including interference that may cause undesired operation.

*NOTE:*

*Changes or modifications not expressively approved by the party responsible for compliance could void the user's authority to operate the equipment.*

The term "IC:" before the radio certification number only signifies that Industry Canada technical specifications were met.

### Security System Fob

## Fob Assignment

See Fob: Smart Security System. Fobs are electronically assigned to the Harley-Davidson Smart Security System by a Harley-Davidson dealer so that the motorcycle can recognize a fob's unique signal. Only two fobs can be assigned at any one time.

Replacement fobs can be purchased from a dealership but can only be assigned to the motorcycle by a trained Harley-Davidson technician.

*NOTES:*

- *The reusable label found on the fob packaging lists the serial number of the fob. For reference, affix the label to a blank "NOTES" page in this Owner's Manual.*
- *The serial number of the fob is also found on the inside of the fob. See Fob Battery.*
- *The module will arm only if the fob has been assigned by a Harley-Davidson dealer and a Personal Identification Number (PIN) has been entered in the system. The PIN should be recorded on the Personal Information page in the front of this Owner's Manual and on the removable wallet card.*
- *Should the rider misplace the fob or if the fob fails, the rider can refer to the wallet card and use the PIN to manually disarm the system. Refer to Arming and Disarming and Troubleshooting.*
- *The PIN can easily be changed by the rider at any time. Refer to Personal Identification Number (PIN).*

## Riding with a Fob

- Always carry the fob when riding, loading, fueling, moving, parking or servicing the motorcycle. Carry the fob in a convenient pocket.
- Do not leave the fob attached to the handlebars or store the fob in a luggage compartment. Unintentionally leaving the fob with the motorcycle when it is parked prevents the system from disabling the ignition and activating the alarm. If the ignition switched is unlocked, the ignition switch can be set to IGN and the engine started.
- Do not ride with the fob stored in a metal case or with the fob closer than 3.0 in 76 mm to a cell phone, PDA, display or other electronic device. Any electromagnetic interference may prevent the fob from disarming the system.
- For added security, always lock the fork and remove the key when parked. If the fob is

within range and the motorcycle is unlocked, tampering with the motorcycle will not activate the alarm.

## Riding without a Fob

If the motorcycle is ridden off without the fob, the odometer window will display "No Fob" after five seconds at any speed above 5 mph 8 km/h . If the motorcycle is stopped and the ignition turned to OFF, it will require a PIN entry to disarm the security system and restart the motorcycle.

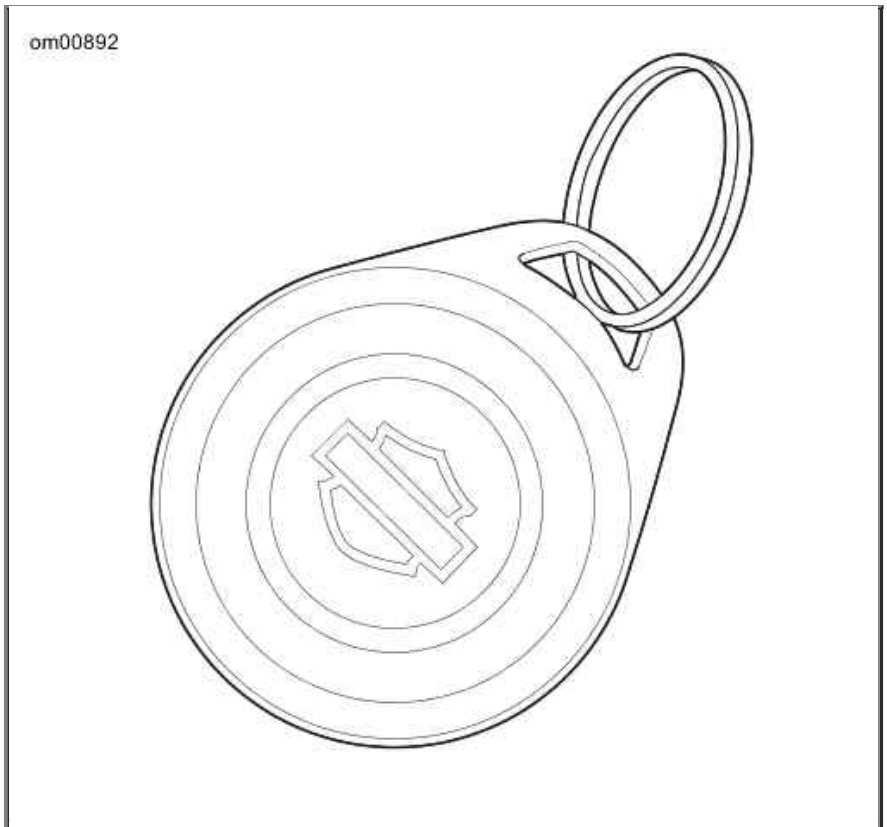


**Fob: Smart Security System**

### Personal Identification Number (PIN)

The Personal Identification Number (PIN) is a number that can be used to disarm the security system in case an assigned fob is misplaced, fails or if the fob cannot communicate with the motorcycle because of electromagnetic interference.

A PIN is a five-digit number (1-9, no zeros).

## Changing the PIN

To maintain security, the rider can change the PIN at any time. Refer to Changing the PIN.

**Changing the PIN**

| STEP NO. | ACTION | WAIT FOR CONFIRMATION | NOTES |
|---|---|---|---|
| 1 | Select a 5-digit (1 thru 9) PIN and record on the wallet card from Owner's Manual. | | |
| 2 | With an assigned fob present, turn the OFF/RUN switch to **OFF**. | | |
| 3 | Turn the ignition switch to **IGN**. | | |
| 4 | Cycle the OFF/RUN switch twice: | | |

| | | | |
|---|---|---|---|
| | **RUN - OFF - RUN - OFF - RUN**. | | |
| 5 | Press **left** turn signal switch **2 times**. | ENTER PIN will scroll through the odometer window. | |
| 6 | Press **right** turn signal switch **1 time** and release. | Turn signals will flash 3 times. Current PIN will appear in odometer. The first digit will be flashing. | |
| 7 | Enter first digit of new PIN by pressing and releasing the **left** turn signal switch until the selected digit appears. | | |
| 8 | Press **right** turn signal switch **1 time** and release. | The new digit will replace the current in odometer window. | |
| 9 | Enter second digit of selected PIN by pressing and releasing the **left** turn signal switch until the selected digit is present. | | |
| 10 | Press **right** turn signal switch **1 time** and release. | The new digit will replace the current in odometer window. | |
| 11 | Enter third digit of the selected PIN by pressing and releasing the **left** turn signal switch until the selected digit is present. | | |
| 12 | Press **right** turn switch **1 time** and release. | The new digit will replace the current in odometer window. | |
| 13 | Enter fourth digit of new PIN by pressing and releasing the **left** turn signal switch until the selected digit is present. | | |
| 14 | Press **right** turn switch **1 time** and release. | The new digit will replace the current in odometer window. | |
| 15 | Enter fifth digit of the new PIN by pressing and releasing the **left** turn signal switch until the selected digit is present. | | |
| 16 | Press **right** turn switch **1 time** and release. | The new digit will replace the current in odometer window. | |
| 17 | Turn the OFF/RUN switch **OFF**, then turn the ignition switch to **OFF**. | | Pushing the OFF/RUN switch to **OFF** stores the new PIN in the module. |

## Security Status Indicator

See Speedometer/Odometer/Tachometer (Typical). The electrical system lamp in the speedometer face indicates the status of the Harley-Davidson Smart Security System.

- **Armed:** A lamp that blinks approximately every 3 seconds indicates that the system is armed.
- **Disarmed:** After the system disarms and the ignition is on, the lamp will remain illuminated for approximately four seconds and then turn off.
- **Service:** A lamp that remains illuminated longer than four seconds when the system is disarmed indicates that service of the module is required.

## Arming and Disarming

## Arming

When the motorcycle is parked and the ignition is turned to OFF or ACC, the security system arms automatically within five seconds if no motion is detected. Even when the fob is present, the system will arm.

On arming, the turn signals will flash twice and the optional siren will chirp twice if the siren is in the chirp mode. While armed, the indicator lamp in the speedometer face will flash every three seconds.

*NOTE:*

***International Models:*** *The system must be in the chirp mode for the siren to chirp on arming or on disarming. See Siren Chirp Mode (Confirmation).*

## Disarming

With the fob present, the rider may ride or move the motorcycle for parking, storage or service without setting off the alarm. Disarming is automatic as long as the fob is within range.

**Fob:** An armed security system is automatically disarmed when the fob is present and the motorcycle is moved or the ignition switch is turned to IGN or ACC.

When the system disarms, the optional siren will chirp once and the security indicator lamp will illuminate for a solid four seconds and then turn off.

*NOTE:*

*On any motion, like lifting the motorcycle up off of its jiffy stand or turning the ignition to ON, the system will electronically "poll" for the presence of the fob. If the fob is present, the system disarms.*

**Personal Identification Number (PIN):** If the fob is misplaced or if the present fob fails to communicate, the system can be disarmed with the Personal Identification Number (PIN).

## Disarming with a PIN

Disarm the security system manually using the PIN if the fob is lost, the fob battery is discharged or if where you parked there is a strong electromagnetic interference.

Do not turn handlebars, straddle seat or lift motorcycle off the jiffy stand. During a PIN disarm, if the security system detects motorcycle motion the system will activate the alarm.

*NOTES:*

- *If a mistake is made while entering PIN, turn the ignition Switch to OFF before entering the last digit and then start the procedure from the beginning.*
- *If the procedure fails to disarm the security system, wait two minutes before attempting another PIN disarm.*
- *The security system will remain disarmed until the ignition is turned to OFF.*
- *At any time during a PIN disarm if the fob is brought within range of the motorcycle, the security system will disarm as the module receives the coded signal from the fob.*

**Entering a PIN to Disarm Harley-Davidson Smart Security System**

| STEP NO. | ACTION | WAIT FOR CONFIRMATION | NOTES |
|---|---|---|---|
| 1 | If necessary, verify the current 5-digit PIN. | | Should be recorded on wallet card. |
| 2 | Turn ignition to **IGN**. | If armed, the odometer window display will | |

| | | | |
|---|---|---|---|
| | | read: ENTER PIN and the security lamp will be flashing at a fast rate. The headlight will not be on. | |
| 3 | Press and release the left turn signal switch. | In the odometer window, a flashing 1 will appear. | |
| 4 | Increment the digit by tapping the left turn signal until the odometer window displays the first digit of the PIN. | The first digit in the odometer will be the first digit in the PIN. | |
| 5 | Press **right** turn switch **1 time.** | The first digit is stored and the next digit will flash. | Serves as enter key. |
| 6 | Increment the second digit using the left turn switch until the digit reaches the second digit of the PIN. | The second digit in the odometer will be the second digit in the PIN. | |
| 7 | Press right turn switch 1 time. | The second digit is stored and the next dash will flash. | Serves as enter key. |
| 8 | Increment the third digit using the left turn switch until it reaches the third digit of the PIN. | The third digit (**c**) in the odometer will be the third digit in the PIN. | |
| 9 | Press **right** turn switch **1 time**. | The third digit is stored and the next dash will flash. | Serves as enter key. |
| 10 | Increment the fourth digit using the left turn switch until it reaches the fourth digit of the PIN. | The fourth digit (**d**) in the odometer will be the fourth digit in the PIN. | |
| 11 | Press **right** turn switch **1 time.** | The fourth digit is stored and the next dash will flash. | Serves as enter key. |
| 12 | Increment the fifth digit using the left turn switch until it reaches the fifth digit of the PIN. | The fifth digit (**e**) in the odometer will be the fifth digit in the PIN. | |
| 13 | Press **right** turn switch **1 time**. | The fifth digit is stored. The security system indicator lamp stops blinking. | Smart Security System is disarmed. |

### Alarm

## Ignition Disabled

When the fob is not present and the system is armed, if the ignition switch is turned to IGN or ACC, the security lamp will flash at a fast rate and the odometer window display will scroll "ENtER PIN". The headlamp will not turn on.

After approximately 10 seconds, if the system does not receive a left turn signal switch input, the display will go blank. The ignition system will remain disabled until the fob is present or the current PIN is entered.

## Warnings

Once armed, if the motorcycle is moved or lifted up off of its jiffy stand and the fob is not present, the alarm will warn the operator with three alternate flashes of the turn signals and a chirp of the optional siren.

Within four seconds, if the motorcycle is back on its jiffy stand and no further motion is detected

and/or the ignition is turned to OFF, the system will remain armed without activating the alarm.

If the motorcycle motion continues, the system will issue a second warning four seconds after the first.

*NOTE:*

*During warnings and alarms, the starter motor and the ignition circuits are disabled.*

## The Alarm

If the security system is still detecting motion and/or if the ignition has not been turned back to OFF after a second warning, the system will activate the alarm.

When activated, the security system will:

- Alternately flash the four turn signals.
- Sound the optional siren.

**Duration:** The alarm will stop within 30 seconds and if no motion is detected, the alarm will not restart.

However, if motorcycle motion continues the system will repeat the 30 second alarm and recheck for motion. The alarm will repeat this 30 second alarm cycle for five minutes (10 cycles) or until the alarm is deactivated.

*NOTE:*

*The alarm will also activate the LED, vibration or audible modes of a Harley-Davidson Security Pager. A pager can operate either in silent or in combination with an optional siren. The range of a pager can be up to 0.5 mi 0.8 km . See a Harley-Davidson dealer for details.*

## Deactivate the Alarm

**Fob:** Bring the fob to the motorcycle. After the system identifies that the fob is present, the system will terminate the alarm.

### Siren Chirp Mode (Confirmation)

## Chirp Mode

In chirp mode, the siren sounds two chirps when arming, and a single chirp when disarming.

## Chirpless Mode

In chirpless mode, the siren does not chirp on arming or disarming.

The siren will still provide warning chirps and sound the alarm if the motorcycle is moved or the ignition switch is turned on without the fob present.

## Switching Modes

Cycling quickly through three armings and disarmings will switch the system from one mode to the other.

1. With the fob present, turn the ignition switch to IGN.
2. When the security lamp turns off, turn the ignition switch to OFF.
3. When the security lamp turns off (but before the turn signals flash twice), immediately turn

the ignition switch to IGN.

4. When the security lamp turns off, immediately turn the ignition switch to OFF.
5. When the security lamp turns off (but before the turn signals flash twice), immediately turn the ignition switch to IGN.
6. When the security lamp turns off, immediately turn the ignition switch to OFF.
7. When the security lamp turns off (but before the turn signals flash twice), immediately turn the ignition switch to IGN.

### Transport Mode

When transporting the motorcycle, place the system in the Transport Mode. Otherwise, the alarm activated by motion detection can discharge the battery.

In the transport mode, the security system is armed without enabling the motion detector for one ignition cycle. This allows the vehicle to be picked up and moved in an armed state, however, any attempt to start the engine when the fob is not within range will trigger the alarm.

## To Enter Transport Mode

1. With an assigned fob within range, turn the ignition switch to IGN.
2. Before the security system lamp goes out, turn the ignition switch to OFF.
3. Within three seconds, simultaneously press both the left and the right turn signal switches.
4. After the turn signals flash once, the system enters the transport mode. With the fob removed, the motorcycle can be moved without setting off the alarm.

## To Exit Transport Mode

With the fob present, turn the ignition switch to IGN to disarm the system.

### Storage and Service Departments

## Long-Term Parking

To maintain arming, store the fob beyond the range of the antenna. The antenna range is approximately 20 ft 6 m . If the motorcycle is to be moved while parked, have the fob present.

If the motorcycle will not be operated for several months, such as during the winter season, refer to Motorcycle Storage.

## Service Departments

When the motorcycle is to be left at a Harley-Davidson dealer, there are two options:

1. Leave an assigned fob with the dealer.
2. To maintain possession of the fob, ask the dealer to disable the system for service (service mode) before leaving the dealership.

### Fob Battery

## Replacing the Battery

Replace the fob battery every year.

1. See Fob Battery. Slowly turn a thin blade in the thumbnail slot (1) on the side of the fob to separate the two halves.
2. Remove the battery (2) and discard.

   *NOTE:*

   *Dispose of the old battery in accordance with local regulations.*

3. Install a **new** battery (Panasonic 2032 or equivalent) with the positive (+) side down.
4. Align the two halves of the fob and snap together.

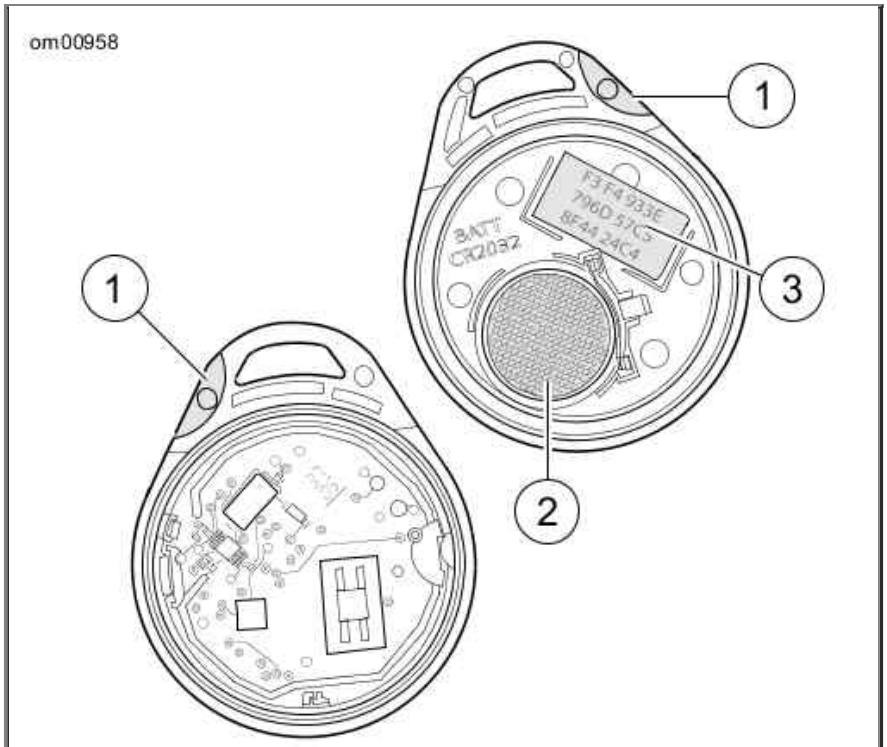


1. Thumbnail slot
2. Battery
3. Fob serial number

**Fob Battery**

### Disconnecting Power

## Siren Equipped Models

When disconnecting the battery or removing the main fuse, perform the following steps to prevent the optional siren from sounding.

1. Verify that the fob is present.
2. Turn the ignition switch to IGNITION.
3. Pull the main fuse from its holder or disconnect the battery.

### Troubleshooting

## Security System Indicator

If the system indicator lamp stays illuminated while riding, see a Harley-Davidson dealer.

## Fob

If the Smart Security System continues to actuate warnings and alarms with the fob present, one of the following can be the cause:

1. **Electromagnetic interference:** Other electronic devices, power lines, or other electromagnetic sources can cause the Smart Security System to operate inconsistently.

    a. Verify that the fob is not in a metal enclosure or within 3.0 in 76 mm of any other electronic devices.

    b. Place the fob on the seat and turn the ignition to IGN. After the system disarms, return the fob to a convenient location.

    c. Move motorcycle at least 15 ft 5 m from the spot of interference.

    d. Use the PIN to disarm the system.

    *NOTE:*

    *Leaving a fob next to a computer monitor can run down the battery.*

2. **Discharged fob battery:** Use the PIN to disarm the system. Replace the battery. Refer to Fob Battery.

3. **A damaged fob:** Use the PIN to disarm the motorcycle. Replacement fobs are available for purchase from a Harley-Davidson dealer.

## Siren

- If the siren does not chirp two or three times on a valid arming command from the security module, the siren is either in the Chirpless Mode, not connected, not working, or the siren wiring was opened or shorted while the siren was disarmed.
- If the siren is armed and the internal siren battery is dead, shorted, disconnected, or has been charging for a period longer than 24 hours, the siren will respond with three chirps on arming instead of two.
- The internal siren battery may not charge if the vehicle's battery is less than 12.5 volts.
- If the siren enters the self-driven mode where it is powered from the siren's internal 9 volt battery, the turn signal lamps may or may not alternately flash. If the security module activates the siren, the turn signal lamps will alternately flash. If the siren has been armed and a security event occurs, and the siren is in self-driven mode, the siren will alarm for 20-30 seconds and then turn off for 5-10 seconds. This alarm cycle will be repeated ten times if the siren is in the self-driven mode.

# Operation

## Operating Recommendations

**⚠WARNING**

**Motorcycles are different from other vehicles. They operate, steer, handle and brake differently. Unskilled or improper use could result in loss of control, death or serious injury. (00556c)**

- Take a rider training course.
- Read Owner's Manual before riding, adding accessories or servicing.
- Wear a helmet, eye protection and protective clothing.
- Never tow a trailer.

**⚠WARNING**

**Travel at speeds appropriate for road and conditions and never travel faster than posted speed limit. Excessive speed can cause loss of vehicle control, which could result in death or serious injury. (00008a)**

**CAUTION**

**Do not run the engine at extremely high RPM with clutch disengaged or transmission in neutral. Running an engine at high RPM can result in engine damage. (00177a)**

**CAUTION**

**Do not exceed the maximum safe RPM specified below under any conditions. Exceeding the maximum safe engine RPM can result in equipment damage. (00248a)**

- The maximum recommended safe engine speed is 5500 rpm.
- Do not idle engine unnecessarily for more than a few minutes with motorcycle standing still.

**CAUTION**

**Air-cooled engines require air movement over the cylinders and heads to maintain proper operating temperature. Extended periods of idling or parade duty can overheat the engine, resulting in serious engine damage. (00178a)**

An engine running long distances at high speed must be given closer than ordinary attention to avoid overheating and possible engine damage.

This applies particularly to a motorcycle equipped with windshield and fairing.

*NOTE:*

*Have the engine checked regularly and keep it well tuned.*

**⚠WARNING**

**When riding on wet roads, brake efficiency and traction are greatly reduced. Failure to use care when braking, accelerating or turning on wet roads can cause loss of control, which could result in death or serious injury. (00041a)**

*NOTE:*

*When descending upon a long, steep grade, downshift and use engine compression together with intermittent application of both brakes to slow the motorcycle.*

**⚠WARNING**

**Continuous use of brake causes overheating and reduced efficiency, which could result in death or serious injury. (00042a)**

**⚠WARNING**

**Do not tow a disabled motorcycle. Towing can adversely**

**Do not tow a disabled motorcycle. Towing can adversely affect stability and handling, which could result in death or serious injury. (00017a)**

### Break-in Riding Rules

## The First 500 Miles (800 Kilometers)

The sound design, quality materials, and workmanship that are built into your new Harley-Davidson will give you optimum performance right from the start.

To allow your engine to wear-in its critical parts, we recommend that you observe the riding rules provided below for the first 500 mi 800 km .

1. During the first 50 mi 80 km of riding, keep the engine speed below 3000 rpm in any gear. Do not lug the engine by running or accelerating at very low rpm, or by running at high rpm longer than needed for shifting or passing.
2. Up to 500 mi 800 km , vary the engine speed and avoid operating at any steady engine speed for long periods. Engine speed up to 3500 rpm in any gear is permissible.
3. Drive slowly and avoid fast starts at wide open throttle until the engine has warmed up.
4. Avoid lugging the engine by not running the engine at very low speeds in higher gears.
5. Avoid hard braking. Break-in new brakes with moderate use for the first 200 mi 300 km .

### Pre-Riding Checklist

**⚠WARNING**

**Read the CONTROLS AND INDICATORS section before riding your motorcycle. Failure to understand the operation of the motorcycle could result in death or serious injury. (00043a)**

Before riding your motorcycle at any time, make a general inspection to be sure it is in safe riding condition.

**⚠WARNING**

**Stop the engine when refueling or servicing the fuel system. Do not smoke or allow open flame or sparks near gasoline. Gasoline is extremely flammable and highly explosive, which could result in death or serious injury. (00002a)**

**⚠WARNING**

**Avoid spills. Slowly remove filler cap. Do not fill above bottom of filler neck insert, leaving air space for fuel expansion. Secure filler cap after refueling. Gasoline is extremely flammable and highly explosive, which could result in death or serious injury. (00028a)**

**⚠WARNING**

**Use care when refueling. Pressurized air in fuel tank can force gasoline to escape through filler tube. Gasoline is**

**extremely flammable and highly explosive, which could result in death or serious injury. (00029a)**

1. Verify fuel is present in tank and add fuel if required.
2. Adjust mirrors to proper riding positions.
3. Check the oil level. Add oil if necessary.
4. Check controls to make sure they operate properly. Operate the front and rear brakes, throttle, clutch and shifter. All controls should operate freely without binding.
5. Check steering for proper operation by turning the handlebars through the full operating range. Handlebars should turn smoothly without binding.

**⚠WARNING**

**Be sure tires are properly inflated, balanced, undamaged, and have adequate tread. Inspect your tires regularly and see a Harley-Davidson dealer for replacements. Riding with excessively worn, unbalanced, improperly inflated, overloaded or damaged tires can lead to tire failure and adversely affect stability and handling, which could result in death or serious injury. (00014b)**

6. Check tire condition, pressure and motorcycle loading. Incorrect pressure and excessive loading can lead to tire or wheel failure, and can affect handling and stability. Refer to Specified Tires for correct inflation pressure.

**⚠WARNING**

**Be sure headlamp, tail and stop lamp and turn signals are operating properly before riding. Poor visibility of rider to other motorists can result in death or serious injury. (00478b)**

7. Check all electrical equipment and switches including the headlamp, stop lamp, turn signals and horn for proper operation.
8. Check for any fuel, oil or hydraulic fluid leaks.
9. Visually check drive belt for wear or damage.
10. Service your motorcycle as necessary.

### Starting the Engine

## General

**CAUTION**

**The engine should be allowed to run slowly for 15-30 seconds. This will allow the engine to warm up and let oil reach all surfaces needing lubrication. Failure to comply can result in engine damage. (00563b)**

Do not roll the throttle before starting. Rolling the throttle before starting the motorcycle is unnecessary.

## Starting

**⚠WARNING**

**Shift transmission to neutral before starting engine to prevent accidental movement, which could result in death or serious injury. (00044a)**

1. Turn the ignition switch to IGN. Do not roll the throttle.
2. See Right Handlebar Controls. Turn the OFF/RUN switch to RUN position.

   *NOTE:*

   *The engine lamp will light for approximately 4 seconds and you will hear the fuel pump purr for approximately two (2) seconds as it operates to fill the fuel lines with gasoline.*

3. Pull in clutch lever.

   *NOTE:*

   *To activate the starting system, the clutch interlock circuitry requires that the clutch be disengaged. The clutch lever must be pulled in against the left handlebar grip and/or the transmission must be shifted to the neutral position (with the green neutral lamp lit).*

4. Raise the jiffy stand (required on international models).
5. Press the starter button to start the motorcycle.

   *NOTE:*

   *If the engine does not start, the starter will operate for 5 seconds and stop. Release the starter button and reapply. If after two 5 second starting attempts, the motorcycle still will not start, see a Harley-Davidson dealer.*

6. When the engine has started, you can operate your motorcycle as you normally would after raising the jiffy stand.

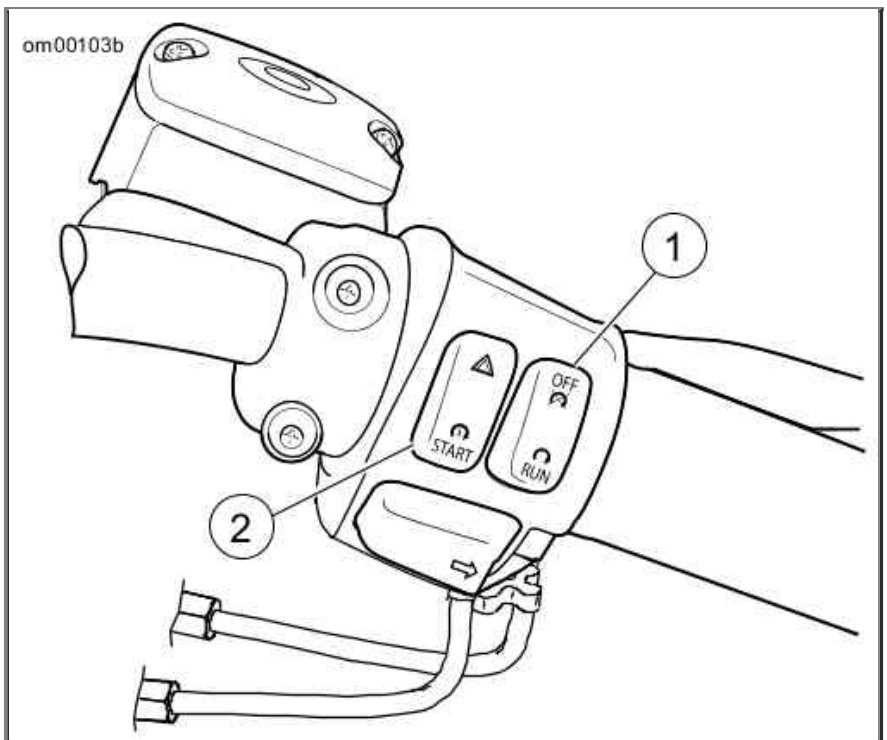


1. Engine off/run switch
2. Engine start switch

**Right Handlebar Controls**

## Automatic Compression Release (ACR)

Vehicles with Twin Cam 103 and larger engines are equipped with an Automatic Compression Release (ACR). During starting, a small auxiliary valve in the cylinder head is opened automatically by the ECM. The open valve releases the air compressed in the cylinder heads and allows the starter motor to turn the high compression engine over at a faster rate to aid starting.

After starting and during normal operation, the ACR valves remain closed.

### Engine Idle Temperature Management System

For those riders who frequently find themselves in riding conditions where the vehicle is subjected to prolonged idle conditions or traffic congestion, an optional dealer enabled engine calibration is available. This calibration offers limited rear cylinder cooling with the vehicle stopped while the engine is left at idle.

This option is available for original equipment engine calibrations only. Motorcycles are delivered from the factory with the engine idle temperature management disabled. Engine idle temperature management can be enabled and disabled by your dealer.

### Stopping the Engine

1. Stop the engine by turning the engine OFF/RUN switch on the right handlebar to OFF.
2. Turn the ignition switch to OFF. If the engine should be stalled or stopped in any way, turn the ignition switch to OFF at once to prevent battery discharge.

### Shifting Gears

## Stopped, Engine Off

Squeeze in the clutch lever to fully disengage the clutch. Gears may not engage because the transmission shafts are not turning and shifter components are not lined up. Rock the motorcycle backward and forward while lightly pressing on the shift lever.

## Starting from a Stop

**CAUTION**

**The clutch must be fully disengaged before attempting a gear shift. Failure to fully disengage the clutch can result in equipment damage. (00182a)**

*NOTE:*

*Always start the engine with the transmission in neutral. Always start forward motion in first gear.*

1. With the engine running and the jiffy stand retracted, pull the clutch hand lever in against the handlebar grip to fully disengage the clutch.
2. Press the gear shift lever down to end of its travel and release. The transmission is now in first gear.
3. Ease out the clutch lever and at the same time, gradually open the throttle.

## Upshift (Acceleration)

See Shifting Sequence: Upshift. Engage the next higher gear when the motorcycle reaches the shifting speed. Refer to Upshift (Acceleration) Gear Speeds: Six Speed.

**Upshift (Acceleration) Gear Speeds: Six Speed**

| GEAR CHANGE | mph | km/h |
|---|---|---|
| First to second | 15 | 25 |
| Second to third | 25 | 40 |
| Third to fourth | 35 | 55 |
| Fourth to fifth | 45 | 70 |
| Fifth to sixth | 55 | 85 |

1. Close the throttle.
2. Disengage the clutch (pull the clutch lever in).
3. Lift the gear shift lever up to the end of its travel and release.
4. Ease out the clutch lever and gradually open the throttle.
5. Repeat the previous steps to engage remaining gears.

*NOTES:*

- *Disengage the clutch completely before each gear change.*
- *Partially open the throttle so the engine does not drag when the clutch lever is released.*

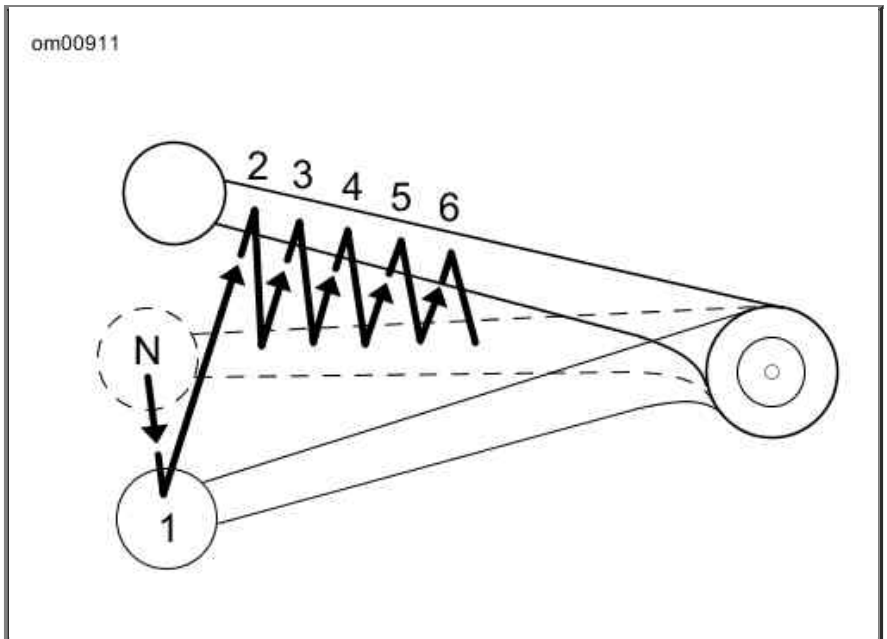


**Shifting Sequence: Upshift**

## Downshift (Deceleration)

**⚠WARNING**

**Do not downshift at speeds higher than those listed. Shifting to lower gears when speed is too high can cause the rear wheel to lose traction and lead to loss of vehicle control, which could result in death or serious injury. (00045b)**

See Shifting Sequence: Downshift. When engine speed decreases, as when climbing a hill or slowing for a turn, shift to the next lower gear. Refer to Downshift (Deceleration) Gear Speeds: Six Speed.

**Downshift (Deceleration) Gear Speeds: Six Speed**

| GEAR CHANGE | mph | km/h |
|---|---|---|

| | | |
|---|---|---|
| Sixth to fifth | 50 | 80 |
| Fifth to fourth | 40 | 65 |
| Fourth to third | 30 | 50 |
| Third to second | 20 | 30 |
| Second to first | 10 | 15 |

*NOTE:*

*The shifting points shown in the table are recommendations. Vehicle owners may determine that their own individual shifting patterns may differ from those stated and are additionally appropriate for individual riding styles.*

1. Close the throttle.
2. Disengage the clutch (pull the clutch lever in).
3. Press the gear shift lever down to the end of its travel and release.
4. Ease out the clutch lever and gradually open the throttle.
5. Repeat the previous steps to engage remaining gears.

*NOTES:*

- *Disengage the clutch completely before each gear change.*
- *Partially open the throttle so the engine does not drag when clutch lever is released.*

**CAUTION**

**Shift to neutral before stopping engine. Shifting mechanism can be damaged by shifting gears while engine is stopped. (00183a)**

The gear shifter mechanism permits shifting the transmission to neutral from either first or second gear.

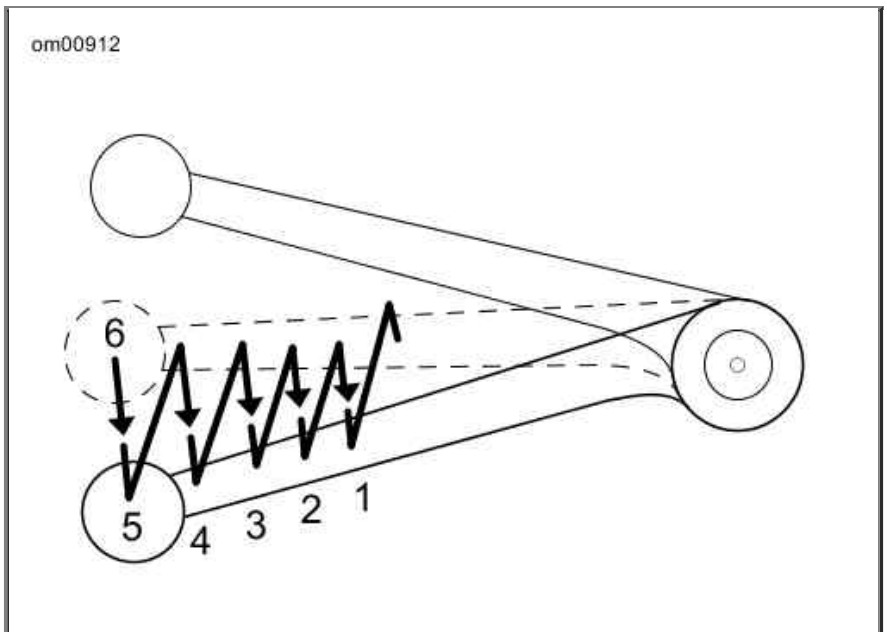


**Shifting Sequence: Downshift**

## Maintenance and Lubrication

### Safe Operating Maintenance

**⚠WARNING**

**Perform the service and maintenance operations as indicated in the regular service interval table. Lack of regular maintenance at the recommended intervals can affect the safe operation of your motorcycle, which could result in death or serious injury. (00010a)**

**⚠WARNING**

**If you operate your motorcycle under adverse conditions (severe cold, extreme heat, very dusty environment, very bad roads, through standing water, etc.), you should perform the regular maintenance intervals more frequently to ensure the safe operation of your motorcycle. Failure to maintain your motorcycle could result in death or serious injury. (00094a)**

Good maintenance leads to safe motorcycling. A careful check of certain equipment must be made after periods of storage. Also, frequently inspect the motorcycle between the regular service intervals to determine if additional maintenance is necessary.

Check the following items:

1. Tires for correct pressure, excessive wear or any signs of tire damage.
2. Drive belt for proper tension, wear or damage.
3. Brakes, steering and throttle for responsiveness and freedom from binding.
4. Brake fluid level and condition. Hydraulic lines and fittings for leaks. Also, check brake pads and discs for wear.
5. Cables for fraying or crimping and free operation.
6. Engine oil and primary chaincase/transmission fluid levels.
7. Headlamp, tail lamp, brake lamp and turn signals for proper operation.

## Break-in Maintenance

*NOTE:*

*The performance of new motorcycle initial service is required to keep your new motorcycle warranty in force and for proper emissions system operation.*

After a new motorcycle has been ridden its first 1000 mi 1600 km , it should be taken to an authorized Harley-Davidson dealer for initial service operations. Refer to Regular Service Intervals: 2013 Softail Models.

## Disposal and Recycling

When servicing the motorcycle, properly recycle or dispose of all fluids, bulbs, batteries, filters and other scrap materials according to local regulations.

## Engine Lubrication

**⚠CAUTION**

**Prolonged or repeated contact with used motor oil may be harmful to skin and could cause skin cancer. Promptly wash affected areas with soap and water. (00358b)**

**⚠CAUTION**

**If swallowed, do not induce vomiting. Contact a physician immediately. In case of contact with eyes, immediately flush with water. Contact a physician if irritation persists. (00357c)**

**CAUTION**

**Do not switch lubricant brands indiscriminately because some lubricants interact chemically when mixed. Use of inferior lubricants can damage the engine. (00184a)**

Engine oil is a major factor in the performance and service life of the engine. Always use the proper grade of oil for the lowest temperature expected before the next scheduled oil change. Refer to Recommended Engine Oils.

This motorcycle was originally equipped with GENUINE HARLEY-DAVIDSON H-D 360 MOTORCYCLE OIL 20W50. H-D 360 is the preferred oil under normal operating conditions. If operation under extreme cold or heat are expected, refer to Recommended Engine Oils for alternative choices.

If necessary and H-D 360 is not available, add oil certified for diesel engines. Acceptable designations include: CH-4, CI-4 and CJ-4. The preferred viscosities, in descending order are: 20W50, 15W40 and 10W40.

At the first opportunity, see an authorized dealer to change back to 100 percent Harley-Davidson oil.

**Recommended Engine Oils**

| TYPE | VISCOSITY | RATING | LOWEST AMBIENT TEMPERATURE | COLD WEATHER STARTS BELOW 50 °F (10 °C) |
|---|---|---|---|---|
| Screamin' Eagle SYN 3 Full Synthetic Motorcycle Lubricant | SAE 20W50 | HD 360 | Above 30 °F -1 °C | Excellent |
| Genuine Harley-Davidson H-D 360 Motorcycle Oil | SAE 20W50 | HD 360 | Above 40 °F 4 °C | Good |
| Genuine Harley-Davidson H-D 360 Motorcycle Oil | SAE 50 | HD 360 | Above 60 °F 16 °C | Poor |
| Genuine Harley-Davidson H-D 360 Motorcycle Oil | SAE 60 | HD 360 | Above 80 °F 27 °C | Poor |
| Genuine Harley-Davidson H-D 360 Motorcycle Oil | SAE 10W40 | HD 360 | Below 40 °F 4 °C | Excellent |

## Checking Oil Level

Engine oil level should be checked only when engine is at normal operating temperature.

- Check engine oil supply at each complete fuel refill.
- Refer to Regular Service Intervals: 2013 Softail Models. Oil should be changed at proper intervals in normal service at warm or moderate temperatures.
- Oil change intervals should be shorter in cold weather. See Winter Lubrication.

**CAUTION**

**Oil level cannot be accurately measured on a cold engine. For pre-ride inspection, with motorcycle leaning on jiffy stand on level ground, oil should register on dipstick between arrows when engine is cold. Do not add oil to bring the level to the FULL mark on a COLD engine. (00185a)**

**CAUTION**

**Do not allow hot oil level to fall below Add/Fill mark on dipstick. Doing so can result in equipment damage and/or equipment malfunction. (00189a)**

**CAUTION**

**Do not overfill oil. Doing so can result in oil carryover to the air cleaner leading to equipment damage and/or equipment malfunction. (00190b)**

## Oil Level Cold Check

Perform engine oil level **COLD CHECK** as follows:

1. For pre-ride inspection with the vehicle on jiffy stand on level ground, remove and wipe off the dipstick. Push the dipstick into the oil tank until the cap is fully seated against the spout.
2. See Engine Oil Level. Remove the dipstick and verify oil registers on the dipstick between the two marks.
    a. If oil level registers on the dipstick, proceed to Oil Level Hot Check.
    b. If oil does not register on the dipstick, proceed to step 3.
3. With the dipstick removed, look into the dipstick opening and verify the oil level is at the filler neck weld.
    a. If the oil level is at or near the filler neck weld, proceed to Oil Level Hot Check.
    b. If the oil level is not at or near the filler neck weld, add only enough oil to bring the level to the filler neck weld. Then proceed to Oil Level Hot Check.

## Oil Level Hot Check

Perform engine oil level **HOT CHECK** as follows:

1. Ride motorcycle until engine is at normal operating temperature.

    *NOTE:*

    *The engine will require a longer warm up period in colder weather.*

2. With the vehicle upright on level ground, allow engine to idle for 1-2 minutes. Turn engine off.
3. With vehicle on jiffy stand remove and wipe off the dipstick. Install the dipstick back into the oil tank.
4. See Engine Oil Level. Remove the dipstick and note the level of the oil. Add only enough oil to bring the level to the FULL mark on the dipstick. Do not overfill.

*NOTE:*

*Refer to Recommended Engine Oils. Use only recommended oil specified under Engine Lubrication.*

5. Start engine and carefully check for oil leaks around drain plug and oil filter.

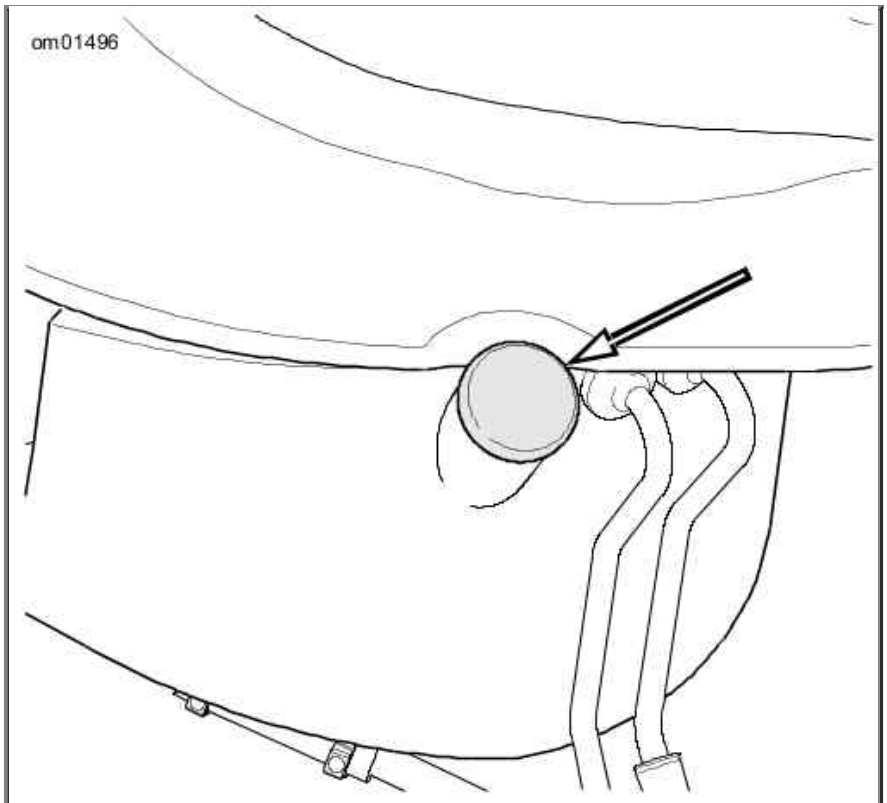


**Engine Oil Filler Cap/Dipstick**

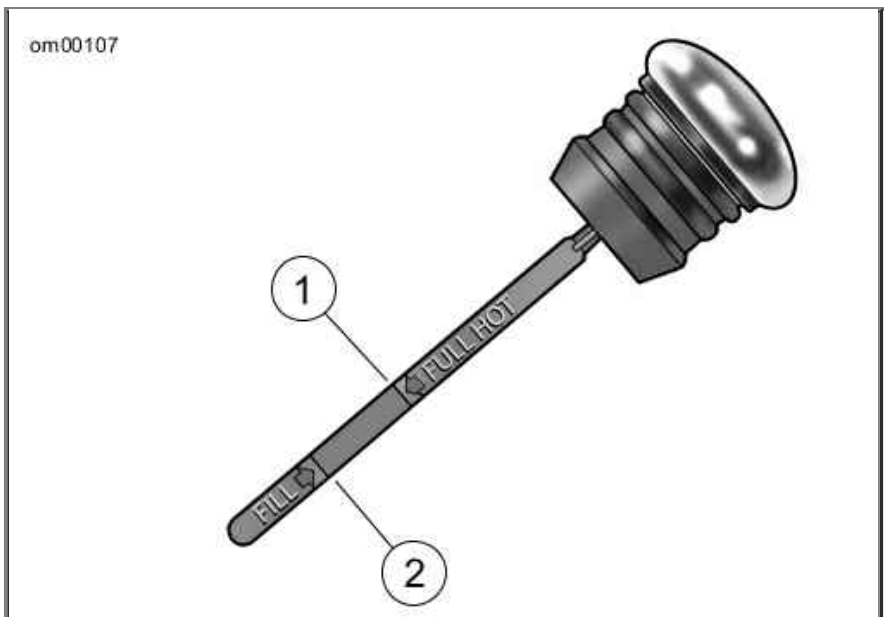


1. FULL HOT
2. FILL

**Engine Oil Level**

## Changing Oil and Oil Filter

Oil filter is located on an oil filter mount in front of the engine.

**CAUTION**

**Do not switch lubricant brands indiscriminately because**

**Do not switch lubricant brands indiscriminately because some lubricants interact chemically when mixed. Use of inferior lubricants can damage the engine. (00184a)**

**⚠WARNING**

**Be sure that no lubricants or fluids get on tires, wheels or brakes when changing fluid. Traction can be adversely affected, which could result in loss of control of the motorcycle and death or serious injury. (00047d)**

Twin Cam equipped vehicles require the premium oil filter (Part No. 63798-99A Chrome or Part No. 63731-99A Black).

1. See Engine Oil Filler Cap/Dipstick. Pull on filler cap while moving plug back and forth to remove.
2. See Oil Tank Drain Plug: Softail Models. Remove engine oil drain plug with O-ring (2). Allow oil to completely drain into a suitable container.

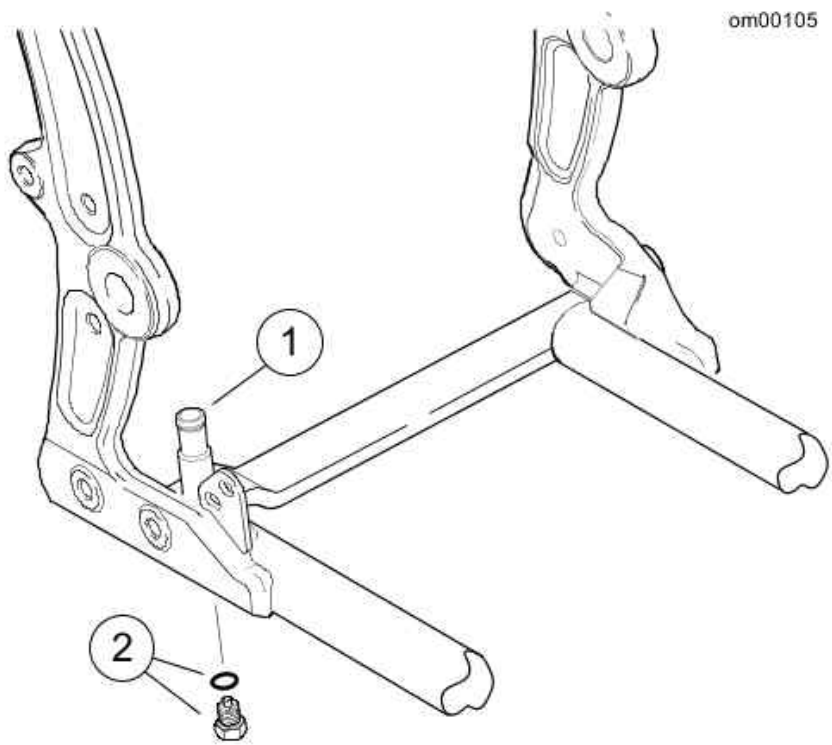


1. Frame connection for oil tank drain hose
2. Oil tank drain plug and O-ring

**Oil Tank Drain Plug: Softail Models**

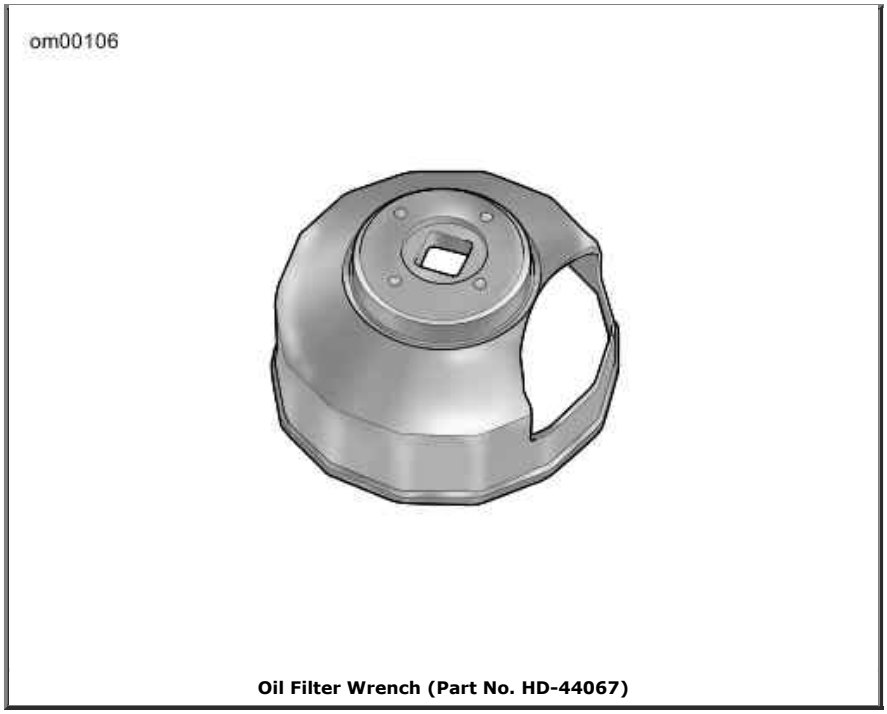


Oil Filter Wrench (Part No. HD-44067)

**CAUTION**

**Use Harley-Davidson oil filter wrench for filter removal. This tool can prevent damage to crankshaft position sensor and/or sensor cable. (00192b)**

*NOTE:*

*Dispose of oil and oil filter in accordance with local regulations.*

3. See Oil Filter Wrench (Part No. HD-44067). Remove the oil filter using the OIL FILTER WRENCH HD-44067 . Clean the oil filter mount flange of any old gasket material (surface should be smooth and free of any debris or old gasket material).
4. Inspect O-ring for tears or damage. Replace if required. Wipe any foreign material from plug.
5. Install O-ring and drain plug and tighten to 14-21 ft-lbs (19.0-28.5 Nm).
6. See Applying Thin Oil Film. Apply a thin film of oil to gasket contact surface on mounting plate, gasket and new oil filter.
7. Screw filter onto adapter until gasket contacts plate surface, then apply another three-quarter to one full turn.
8. Fill oil tank with no more than 3.0 qt 2.8 L of oil. Use the proper grade of oil for the lowest temperature expected before next oil change.

**CAUTION**

**Do not overfill oil. Doing so can result in oil carryover to the air cleaner leading to equipment damage and/or equipment malfunction. (00190b)**

9. Install the filler cap.
10. Start engine and carefully check for oil leaks around drain plug and oil filter.
11. Check engine oil level. Install filler cap.

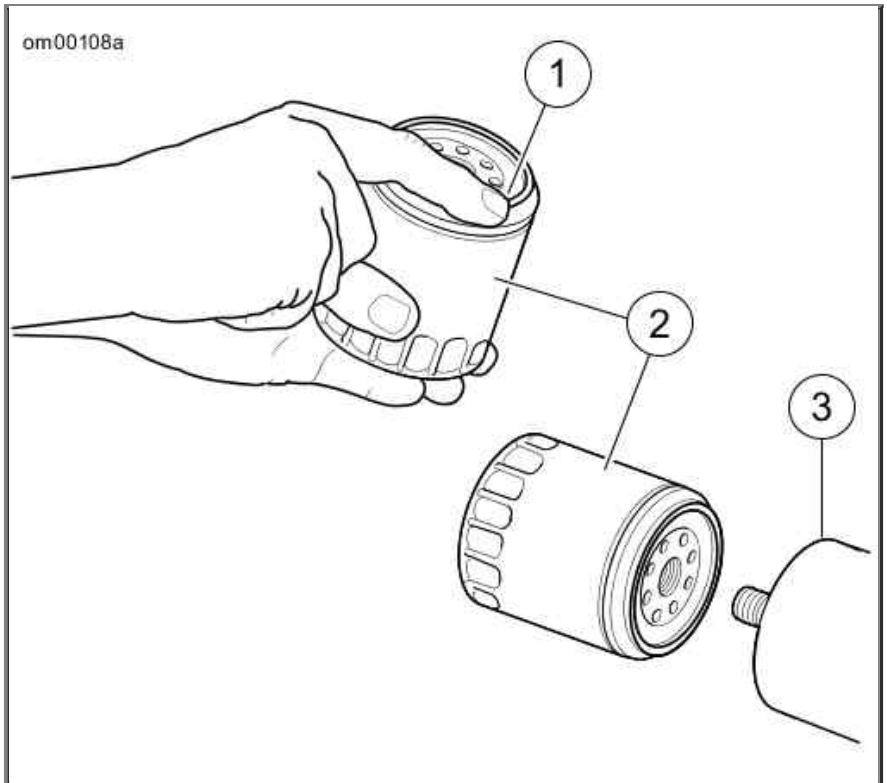


1. Thin film of oil ONLY
2. Oil filter
3. Mounting plate

**Applying Thin Oil Film**

## Winter Lubrication

Change engine oil often in colder climates. If motorcycle is frequently used for trips less than 15 mi 24 km , in ambient temperatures below 60 °F 16 °C , reduce oil change intervals to 1500 mi 2400 km .

*NOTE:*

*The further below freezing the temperature drops, the shorter the oil change interval should be.*

Water vapor is a normal by-product of combustion in any engine. During cold weather operation, some water vapor condenses to liquid form on the cool metal surfaces inside the engine. In freezing weather this water will become slush or ice. Over time, accumulated slush or ice may block the oil lines and cause engine damage.

If the engine is run frequently and allowed to thoroughly warm up, most of this water will become vapor again and will be blown out through the crankcase breather.

If the engine is not run frequently and not allowed to thoroughly warm up, this water will accumulate, mix with the engine oil and form a sludge that is harmful to the engine.

## Transmission Lubricant

*NOTE:*

*Check transmission fluid at room temperature.*

1. Park on level ground on the jiffy stand.
2. See Transmission Filler Plug/Dipstick Location. Remove transmission lubricant dipstick. Wipe dipstick clean.
3. Insert dipstick into transmission. Thread dipstick in until O-ring makes contact with case. Do not tighten.
4. See Transmission Dipstick Lubricant Level. Remove dipstick. Check lubricant level on

dipstick.

**CAUTION**

**Mixing mineral-based lubricants with SYN-3 in the transmission can damage the transmission. (00452b)**

5. The level should be between the A and F marks. Add only enough lubricant to bring level to between the A mark and the F mark. Refer to Transmission Lubricant.
6. Install dipstick. Tighten to 25-75 in-lbs (2.8-8.5 Nm).

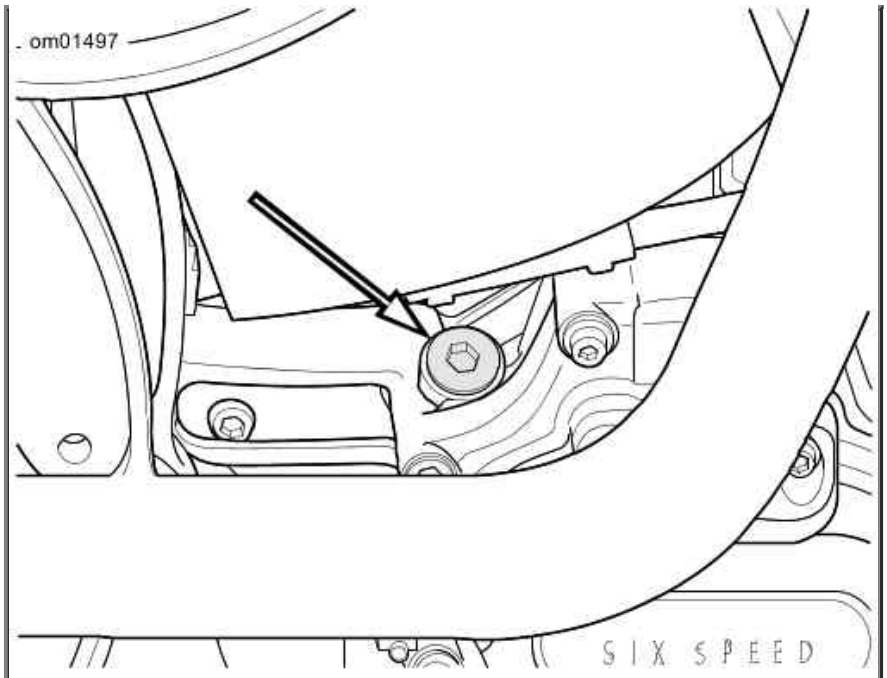


**Transmission Filler Plug/Dipstick Location**

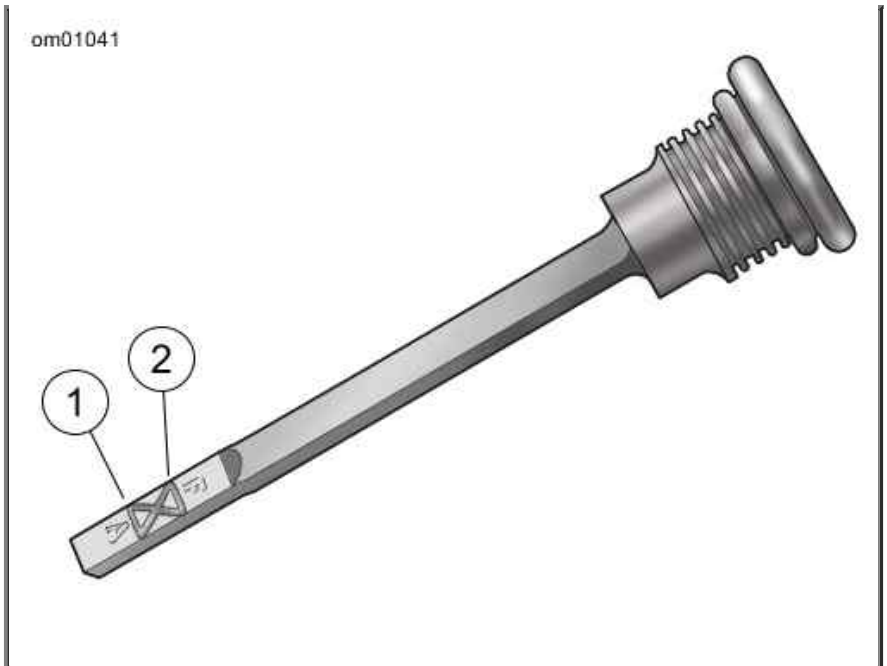


1. Add
2. Full

**Transmission Dipstick Lubricant Level**

**Transmission Lubricant**

| MODEL | LUBRICANT |
|---|---|
| All | FORMULA+ TRANSMISSION AND PRIMARY |

## Changing Transmission Lubricant

1. See Transmission Filler Plug/Dipstick Location. Remove transmission filler plug/dipstick.

**CAUTION**

**When draining or adding lubricant, do not allow dirt, debris or other contaminants to enter the engine. (00198a)**

**⚠WARNING**

**Be sure that no lubricants or fluids get on tires, wheels or brakes when changing fluid. Traction can be adversely affected, which could result in loss of control of the motorcycle and death or serious injury. (00047d)**

2. See Transmission Drain Plug (Bottom View). Remove transmission drain plug. Drain lubricant into a suitable container.
3. Clean and inspect drain plug and O-ring.

**CAUTION**

**Do not over-tighten filler or drain plug. Doing so could result in a lubricant leak. (00200b)**

4. Install drain plug with O-ring. Tighten to 14-21 ft-lbs (19.0-28.5 Nm). Do not over-tighten.
5. Fill the transmission with 28 oz 0.83 L of recommended Harley-Davidson lubricant. Refer to Transmission Lubricant.
6. Check lubricant level and add enough lubricant to bring the level between the A(dd) and F(ull) marks. See Transmission Lubricant.
7. Install filler plug/dipstick. Tighten to 25-75 in-lbs (2.8-8.5 Nm).

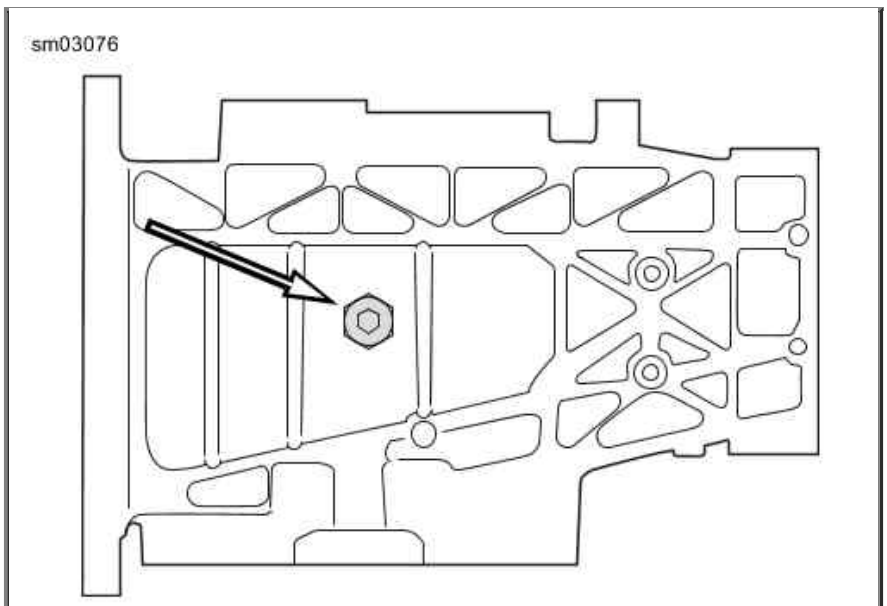


**Transmission Drain Plug (Bottom View)**

### Primary Chaincase Lubrication

Lubrication is a major factor in the performance and service life of the clutch components.

Refer to Regular Service Intervals: 2013 Softail Models. The primary chaincase should be drained and refilled with fresh lubricant at proper intervals.

*NOTE:*

*Use only GENUINE Harley-Davidson FORMULA+ TRANSMISSION AND PRIMARY CHAINCASE LUBRICANT (Part No. 99851-05 qt) when changing primary chaincase lubricant.*

### Chaincase Lubricant

Refer to Regular Service Intervals: 2013 Softail Models. The chaincase lubricant should be drained and refilled with fresh lubricant at proper intervals.

**CAUTION**

**Do not overfill the primary chaincase with lubricant. Overfilling can cause rough clutch engagement, incomplete disengagement, clutch drag and/or difficulty in finding neutral at engine idle. (00199b)**

## Changing Chaincase Lubricant

1. Ride motorcycle until engine is warmed up to normal operating temperature.

   **CAUTION**

   **When draining or adding lubricant, do not allow dirt, debris or other contaminants to enter the engine. (00198a)**

2. See Clutch Cover. Using a T27 TORX drive head, remove five screws (3) (with captive washers) to free clutch inspection cover (2) from primary chaincase cover.

3. See Removing Chaincase Drain Plug. Remove magnetic drain plug at bottom of inner primary chaincase cover. Drain lubricant into suitable container.

   *NOTE:*

   *Dispose of chaincase lubricant in accordance with local regulations.*

4. Clean drain plug. If plug has accumulated a lot of debris, inspect the condition of the chaincase components.

5. Install **new** o-ring on drain plug.

6. Install drain plug back into inner primary chaincase cover. Tighten plug to 14-21 ft-lbs (19-28 Nm).

   **CAUTION**

   **Do not overfill the primary chaincase with lubricant. Overfilling can cause rough clutch engagement, incomplete disengagement, clutch drag and/or difficulty in finding neutral at engine idle. (00199b)**

7. Pour 32 oz 0.95 L of GENUINE Harley-Davidson FORMULA+ TRANSMISSION AND PRIMARY CHAINCASE LUBRICANT (Part No. 99851-05 qt) through the clutch inspection

cover opening.

**⚠WARNING**

**Be sure that no lubricants or fluids get on tires, wheels or brakes when changing fluid. Traction can be adversely affected, which could result in loss of control of the motorcycle and death or serious injury. (00047d)**

**CAUTION**

**When draining or adding lubricant, do not allow dirt, debris or other contaminants to enter the engine. (00198a)**

*NOTE:*

*Use only GENUINE Harley-Davidson FORMULA+ TRANSMISSION AND PRIMARY CHAINCASE LUBRICANT (Part No. 99851-05 quart).*

8. Install clutch inspection cover and **new** gasket as follows:

   a. Thoroughly wipe all lubricant from cover mounting surface and groove in primary cover.

   b. Position gasket in groove in primary cover and press each of the nubs on gasket into the groove. The nubs will retain the seal in position.

   c. Insert screw (with captive washer) through clutch inspection cover and thread it into the top cover screw hole.

   d. Start the remaining four screws (with captive washers).

   e. Using a T27 TORX drive head, alternately tighten screws to 84-108 in-lbs (9.5-12.2 Nm).

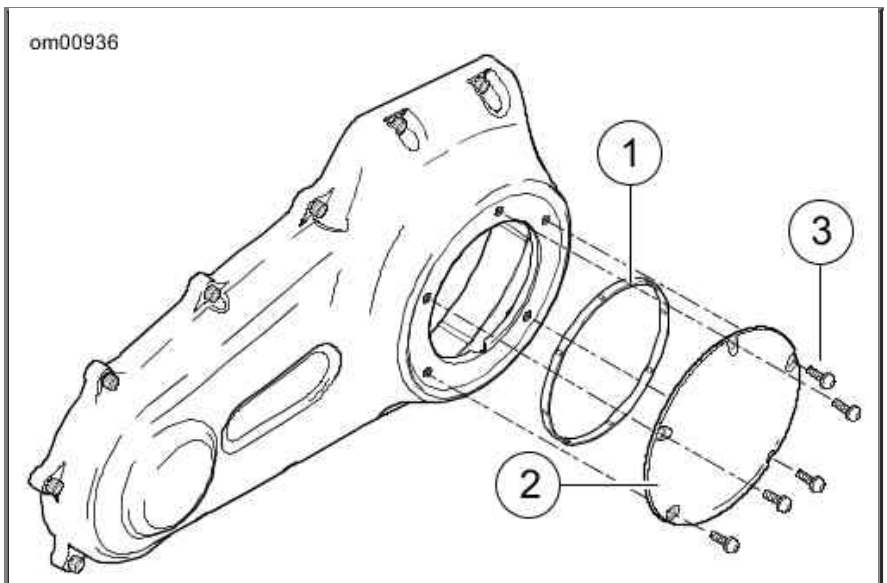


1. Gasket
2. Clutch inspection cover
3. Screws with captive washer

**Clutch Cover**

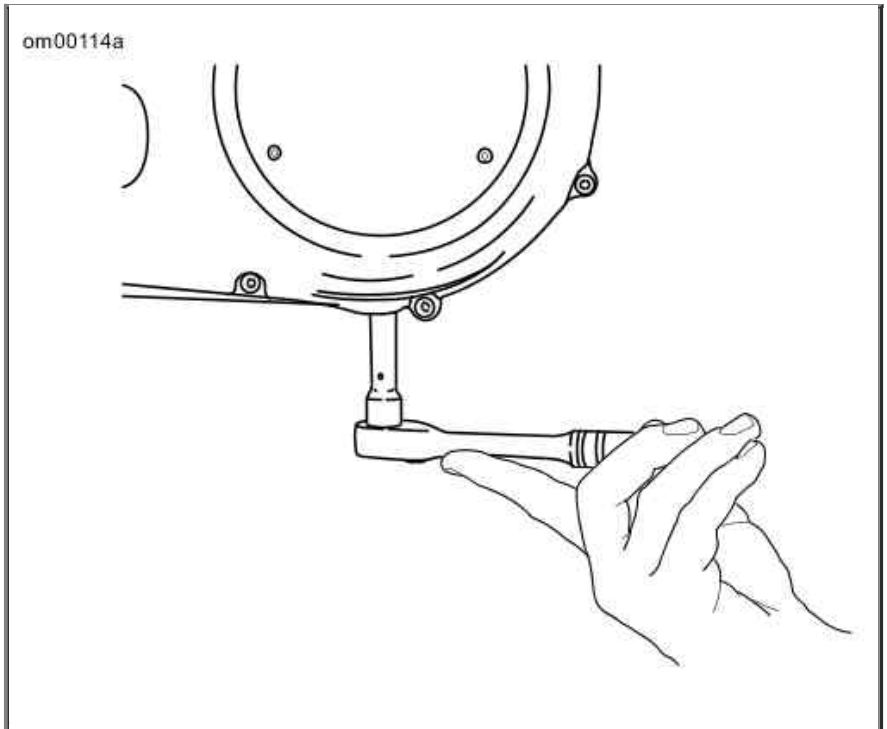


**Removing Chaincase Drain Plug**

## Checking Drive Belt Deflection

*NOTE:*

*Always use BELT TENSION GAUGE HD-35381-A to measure belt deflection. Do not rely on "feel" as this can result in belts that are under tensioned. Loose belts will fail due to "ratcheting" (jumping a tooth).*

Check belt deflection:

- With transmission in neutral.
- At loosest spot in belt.
- With motorcycle at room temperature.
- With the rear wheels elevated or on the ground without rider or luggage.

**⚠WARNING**

**To prevent accidental vehicle start-up, which could cause death or serious injury, disconnect negative (-) battery cable before proceeding. (00048a)**

1. Disconnect battery negative cable. See Battery.
2. Slide O-ring on gauge toward 0 lbs (0 kg) mark.
3. See Checking Belt Deflection. Fit cradle against bottom of belt midway between transmission sprocket and rear sprocket.
4. Push upward on knob until O-ring slides to the 10 lb 4.5 kg mark on the tool and compare belt deflection to scale on debris deflector.
5. Rotate rear wheels and measure deflection at several locations around the belt. Select the loosest measurement and compare with specifications in Drive Belt Deflection. Belt must be adjusted if not within specification.

**Drive Belt Deflection**

| VEHICLE | FXS, FXSB, FLSTN, FLS*, FLSTFB** | OTHER MODELS |
|---|---|---|

| | | |
|---|---|---|
| With motorcycle on jiffy stand without rider or luggage | 1/4-5/16 in. 6.4-7.9 mm | 9/16-5/8 in. 14.3-15.9 mm |
| Vehicle upright with rear wheel in air | 5/16-3/8 in. 7.9-9.5 mm | 11/16-3/4 in. 17.5-19.1 mm |
| *FLS (DOM/CAL/CAN/HDI/JPN configurations)<br>**FLSTFB (DOM/CAL/CAN/JPN/AUS configurations)<br>Refer to Harley-Davidson VIN Breakdown: 2013 Softail Models to determine vehicle configuration. | | |

6. Connect battery negative cable. Tighten to 60-70 in-lbs (6.8-7.9 Nm).

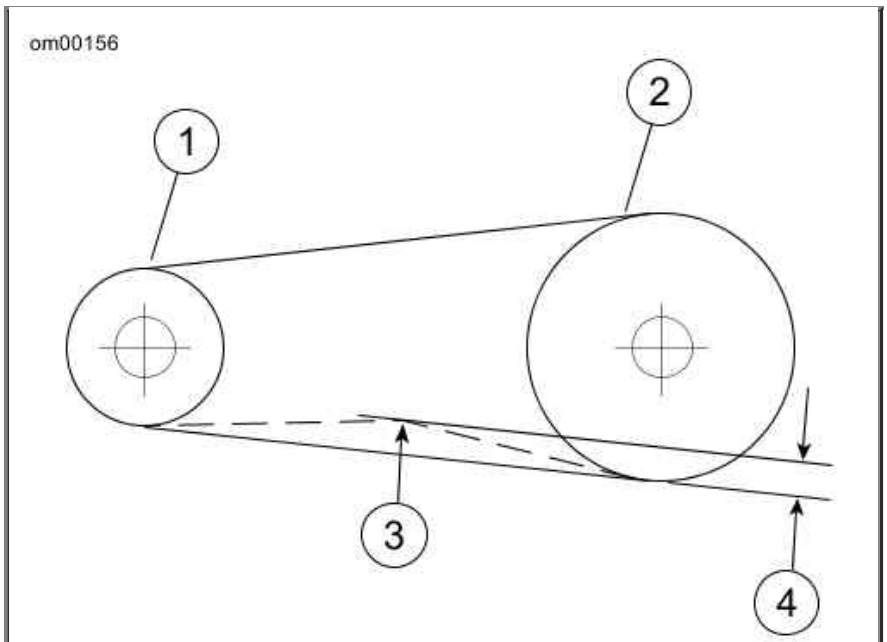


1. Transmission sprocket
2. Rear wheel sprocket
3. 10 lbs (4.5 kg) of force
4. Amount of deflection

**Checking Belt Deflection**

## Chassis Lubrication

Refer to Regular Service Intervals: 2013 Softail Models for all maintenance schedules.

*NOTE:*

*Use recommended SPECIAL PURPOSE GREASE for steering head bearings. Use a multipurpose chassis grease for other applications.*

1. Remove and lubricate handlebar throttle control grip sleeve with fresh graphite.
2. Lubricate throttle control cables and clutch control cable with HARLEY LUBE.
3. Lubricate front brake hand lever and clutch control hand lever only if necessary.
4. Inspect rear fork pivot shaft bearings.
5. Pack the steering head bearings with SPECIAL PURPOSE GREASE at recommended service intervals.

6. Lubricate the jiffy stand mechanism with SILVER GRADE ANTI-SEIZE.

*NOTE:*

*For model specific information regarding the chassis lubrication, refer to the appropriate Service Manual or see a Harley-Davidson dealer.*

## Oil Applications

Refer to Regular Service Intervals: 2013 Softail Models for all control connections and parts. Vehicle should be lubricated at regular intervals, particularly after washing motorcycle or driving in wet weather.

## Front Fork Oil

Refer to Regular Service Intervals: 2013 Softail Models. Have a Harley-Davidson dealer drain the front fork oil and refill at proper intervals. If fork does not appear to be working properly or an appreciable amount of oil leakage should develop, see a Harley-Davidson dealer. If there is insufficient oil in either side of fork, the rebound action will be incorrect.

## Fuel Filter

A fuel filter is attached to the fuel pump. See a service manual or Harley-Davidson dealer for fuel filter maintenance.

## Clutch

**CAUTION**

**The clutch control cable must be oiled and adjusted periodically to compensate for lining wear. See MAINTENANCE SCHEDULING in this manual. Failure to oil and adjust the clutch control cable can result in equipment damage. (00203b)**

The need for attention to clutch and controls will be indicated by the clutch slipping under load or dragging when released. In this situation, check the control cable adjustment first. See a Harley-Davidson dealer for proper service.

## Hydraulic Lifters

The hydraulic lifters are self-adjusting. They automatically adjust length to compensate for engine expansion and valve mechanism wear. This keeps the valve mechanism free of lash when the engine is running.

When starting an engine which has been turned off even for a few minutes, the valve mechanism may be slightly noisy until the hydraulic units completely refill with oil. If at any time the valve mechanism becomes abnormally noisy, other than for a short period immediately after engine is started, it is an indication that one or more of the hydraulic units may not be functioning properly.

Always check the engine oil level first since normal circulation of oil through the engine is necessary for proper operation of the hydraulic lifters.

If engine oil is at the proper level, the lifters may not be functioning properly because of dirt in the oil supply passages leading to the lifter units. See a Harley-Davidson dealer for service.

## Steering Head Bearings

**⚠WARNING**

**Adjustments to steering head bearings should be performed by a Harley-Davidson dealer. Improperly adjusted bearings can adversely affect handling and stability, which could result in death or serious injury. (00051b)**

Check for proper steering head bearing adjustment and lubricate bearings using SPECIAL PURPOSE GREASE at proper intervals. Refer to Regular Service Intervals: 2013 Softail Models.

With motorcycle front end raised off the floor, be sure front fork turns freely without any binding or interference and that there is no appreciable front to rear fork movement indicating excessive bearing looseness. Steering head bearings should be adjusted according to service manual procedure, if necessary.

### Brakes

Refer to Regular Service Intervals: 2013 Softail Models. Inspect brake fluid level and check brake pads and discs for wear at proper intervals.

## Brake Fluid

**⚠WARNING**

**Clean filler cap before removing. Use only D.O.T. 4 brake fluid from a sealed container. Contaminated fluid can adversely affect braking, which could result in death or serious injury. (00504c)**

**⚠CAUTION**

**Direct contact of D.O.T. 4 brake fluid with eyes can cause irritation. Avoid eye contact. In case of eye contact flush with large amounts of water and get medical attention. Swallowing large amounts of D.O.T. 4 brake fluid can cause digestive discomfort. If swallowed, obtain medical attention. Use in well ventilated area. KEEP OUT OF REACH OF CHILDREN. (00240a)**

**CAUTION**

**D.O.T. 4 brake fluid will damage painted and body panel surfaces it comes in contact with. Always use caution and protect surfaces from spills whenever brake work is performed. Failure to comply can result in cosmetic damage. (00239b)**

**CAUTION**

**Do not allow dirt or debris to enter the master cylinder reservoir. Dirt or debris in the reservoir can cause improper operation and equipment damage. (00205c)**

1. See Brake Fluid Sight Glass (typical). Look through the sight glass on the front and rear brake fluid reservoirs to check for the presence of brake fluid. If necessary, turn the handlebars from side to side or gently shake the vehicle to agitate the fluid.

- The sight glass will darken when fluid is present.
- If the sight glass remains clear, see a Harley-Davidson dealer.

*NOTE:*

- *If the brake system is not leaking, there should never be a need to add fluid. If the fluid level is low, the pads are probably worn and need to be replaced. By replacing the pads, the fluid level will rise.*
- *Use only DOT 4 BRAKE FLUID and replace the brake fluid every 2 years. See a Harley-Davidson dealer.*

2. Verify that the front brake lever and rear brake pedal have a firm feel when applied. If brakes are not firm, the brake system must be bled.

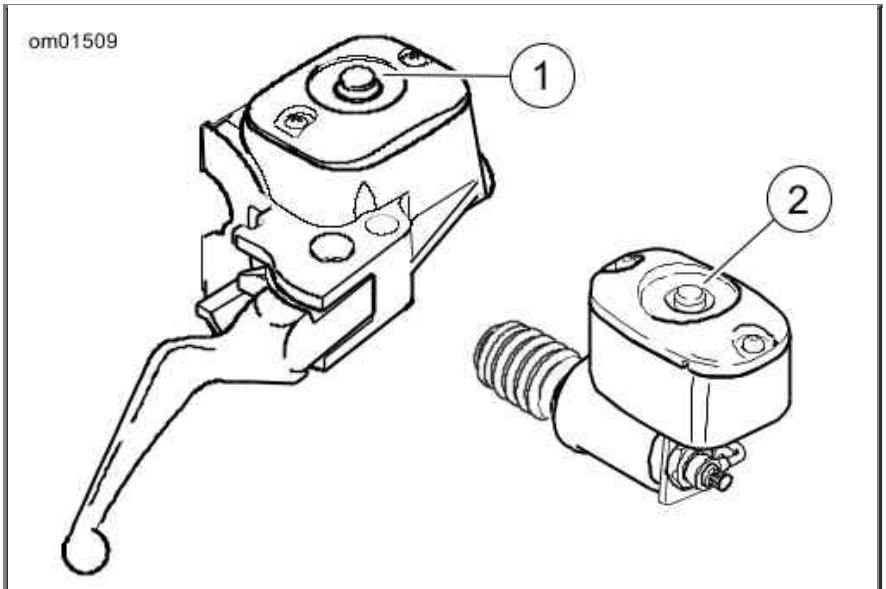


1. Sight glass, front master cylinder reservoir
2. Sight glass, rear master cylinder reservoir

**Brake Fluid Sight Glass (typical)**

## Brake Pads

**⚠WARNING**

**Inspect brake pads for wear at service maintenance intervals. If you ride under adverse conditions (steep hills, heavy traffic, etc.), inspect more frequently. Excessively worn brake pads can lead to brake failure, which could result in death or serious injury. (00052a)**

**⚠WARNING**

**Always replace brake pads in complete sets for correct and safe brake operation. Improper brake operation could result in death or serious injury. (00111a)**

**⚠WARNING**

**Brakes are a critical safety component. Contact a Harley-Davidson dealer for brake repair or replacement. Improperly serviced brakes can adversely affect brake performance, which could result in death or serious injury. (00054a)**

**⚠WARNING**

**Perform routine scheduled brake maintenance. Lack of**

**maintenance at recommended intervals can adversely affect brake performance, which could result in death or serious injury. (00055a)**

**⚠WARNING**

**Be sure wheel and brake caliper are aligned. Riding with a misaligned wheel or brake caliper can cause the brake disc to bind and lead to loss of control, which could result in death or serious injury. (00050a)**

Harley-Davidson has provided your new motorcycle with the optimum brake pad friction material available. It is selected to give the best performance possible under dry, wet and high operating temperature conditions. It exceeds all regulatory requirements currently in effect. However, during some braking conditions you may experience noise. This is normal for this friction material.

1. See Brake Friction Material. Check the brake disc as it spins. The disc should run true in the brake caliper.
2. Measure the thickness of the brake pad friction material.
3. Refer to Minimum Brake Pad Friction Material Thickness. If the brake pad friction material is at the minimum thickness or less, replace the pads. Always replace brake pads in pairs. See a Harley-Davidson dealer.

**Minimum Brake Pad Friction Material Thickness**

| MODEL | in | mm |
|---|---|---|
| Softail models | 0.040 | 1.02 |

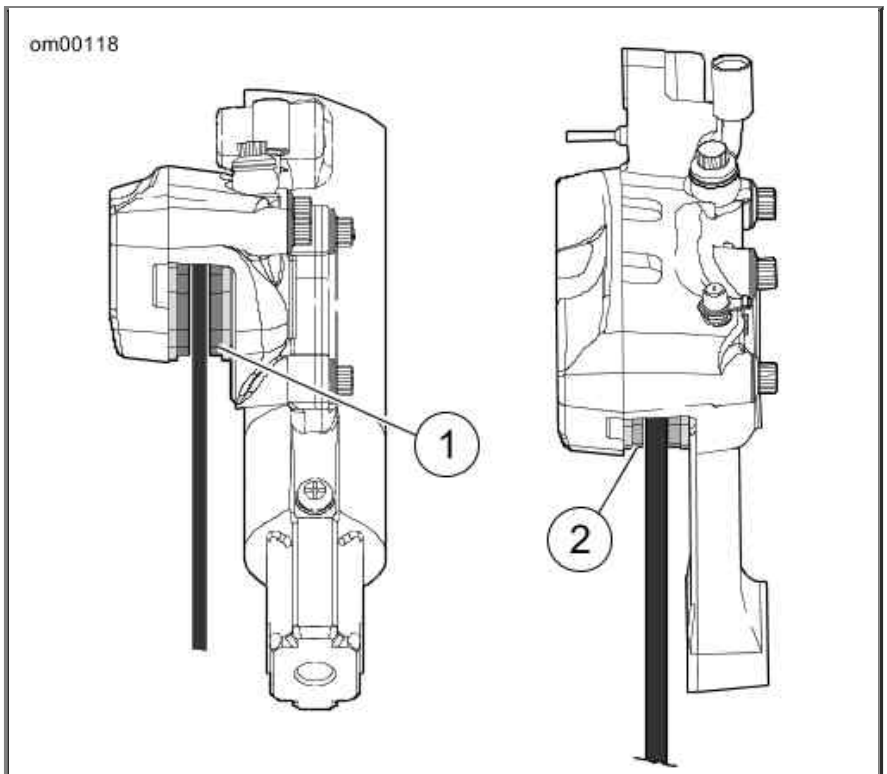


1. Front, from below
2. Rear, from above

**Brake Friction Material**

## Tires

Refer to Specified Tires for tires and pressures.

- Be sure to keep tires properly inflated.
- Maintain correct tire pressure.
- Follow tire data for correct cold tire inflation pressure.
- Check before riding when tires are cold.

**⚠WARNING**

**Be sure tires are properly inflated, balanced, undamaged, and have adequate tread. Inspect your tires regularly and see a Harley-Davidson dealer for replacements. Riding with excessively worn, unbalanced, improperly inflated, overloaded or damaged tires can lead to tire failure and adversely affect stability and handling, which could result in death or serious injury. (00014b)**

**⚠WARNING**

**Match tires, tubes, rim strips or seals, air valves and caps to the correct wheel. Contact a Harley-Davidson dealer. Mismatching can lead to tire damage, allow tire slippage on the wheel or cause tire failure, which could result in death or serious injury. (00023c)**

Check tires for correct pressure, excessive wear, or any signs of tire damage at least weekly if in daily use. Check before each trip if only used occasionally.

Use only Harley-Davidson specified tires. Refer to Specified Tires Tire Specifications. Other tires may not fit correctly and could adversely affect stability, handling and performance.

**⚠WARNING**

**Tires are a critical safety component. Contact a Harley-Davidson dealer for tire repair or replacement. Improper tire service can adversely affect stability and handling, which could result in death or serious injury. (00057a)**

**⚠WARNING**

**Replace punctured or damaged tires. In some cases, small punctures in the tread area may be repaired from within the removed tire by a Harley-Davidson dealer. Speed should NOT exceed 50 mph (80 km/h) for the first 24 hours after repair, and the repaired tire should NEVER be used over 80 mph (130 km/h). Failure to follow this warning could lead to tire failure and result in death or serious injury. (00015b)**

**⚠WARNING**

**Striking an object, such as a curb or pothole can cause internal tire damage. If an object is struck, have the tire inspected immediately inside and out by a Harley-Davidson dealer. A damaged tire can fail while riding and adversely affect stability and handling, which could result in death or serious injury. (00058b)**

## Rim Seals

Some Softail motorcycles with profile laced wheels (wire spoked wheels with smooth round rims) are fitted with a special rim seal, a rim strip and a tubeless tire. An inner tube is not used. These rims are unique and identified by the letters MTM and the word TUBELESS etched into the rim. Never install a tire with an inner tube on these type wheels. Install a new rim seal and rim strip each time a new tire is mounted on a profile laced wheel with MTM and TUBELESS markings.

Steel laced rims use an inner tube and rim strip. Tubeless tires fitted with the correct size inner tubes may be used with these wheels. Install a new inner tube and rim strip each time a tire is installed on a steel laced wheel.

### Tire Replacement

## Inspection

**⚠WARNING**

**Be sure tires are properly inflated, balanced, undamaged, and have adequate tread. Inspect your tires regularly and see a Harley-Davidson dealer for replacements. Riding with excessively worn, unbalanced, improperly inflated, overloaded or damaged tires can lead to tire failure and adversely affect stability and handling, which could result in death or serious injury. (00014b)**

**⚠WARNING**

**Replace tire immediately with a Harley-Davidson specified tire when wear bars become visible or only 1/32 in (0.8 mm) tread depth remains. Riding with a worn tire could result in death or serious injury. (00090c)**

Harley-Davidson tires are equipped with wear bars that run horizontally across the tread. When a tire is worn to the point the tread wear indicator bars become visible on the tread surfaces, or 1/32 in 0.8 mm tread depth remains, the tire can:

- Be more easily damaged leading to tire failure.
- Provide reduced traction.
- Adversely affect stability and handling.

See Dunlop Sidewall Tire Wear Bar Locator. Arrows on the tire sidewalls pinpoint location of wear bar indicators.

See Dunlop Tire Wear Bar Appearance. Always replace tires before the tread wear indicator bars appear.

## When To Replace Tires

**⚠WARNING**

**Use only Harley-Davidson specified tires. See a Harley-Davidson dealer. Using non-specified tires can adversely affect stability, handling or braking, which could result in death or serious injury. (00024b)**

New tires are needed if any of the following conditions exist (refer to Specified Tires for the specified replacement tires):

1. Tread wear indicator bars become visible on the tread surfaces.

2. Tire cords or fabric become visible through cracked sidewalls, snags or deep cuts.
3. Bumps, bulges or slits in the tire.
4. Punctures, cuts, or other damage to the tire that cannot be repaired.

When installing tires on rims, do not rely on tread design to determine direction of rotation. Always be sure the rotational arrows molded into the sidewalls point in the direction of rotation when the vehicle is moving forward.

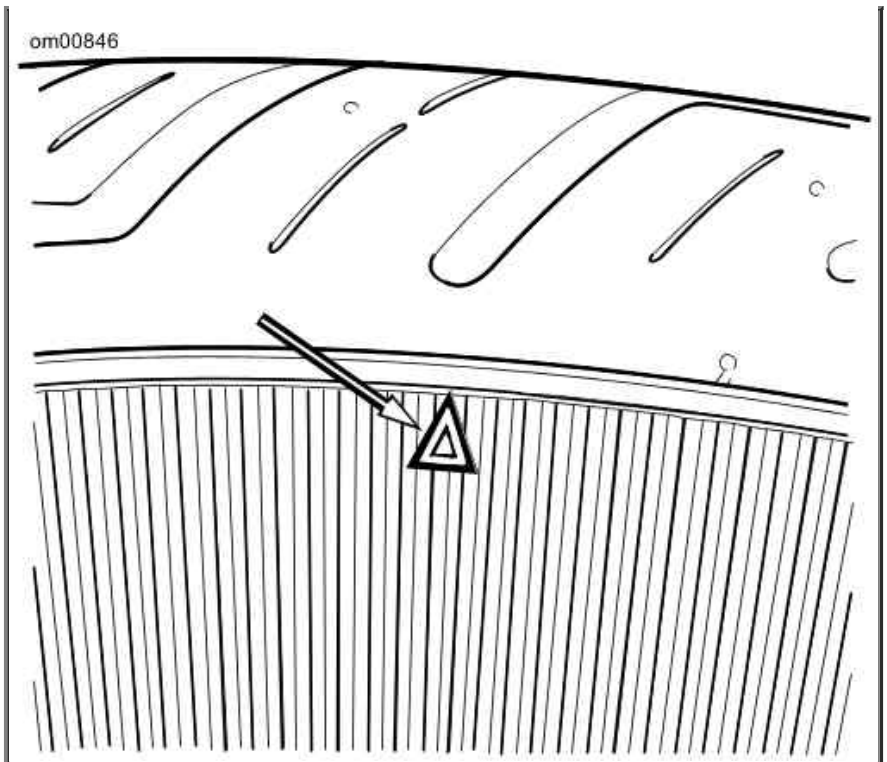


**Dunlop Sidewall Tire Wear Bar Locator**

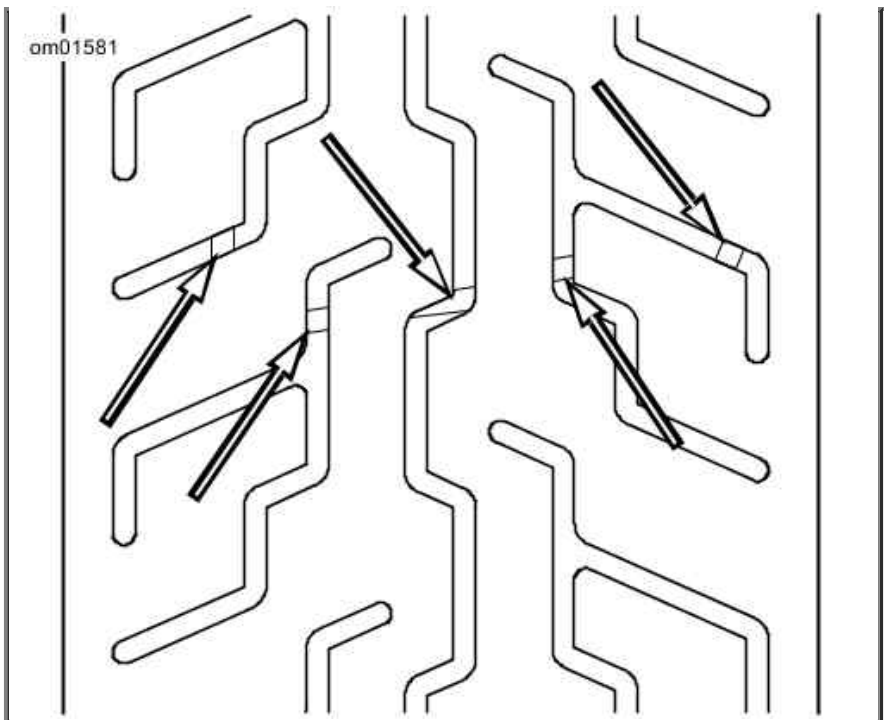


**Dunlop Tire Wear Bar Appearance**

## Shock Absorbers

Inspect shock absorbers and rubber bushings for leaks and bushing deterioration at proper intervals.

**⚠WARNING**

**Shock absorber cannot be serviced. Attempting service can cause an explosion, which could result in death or serious injury. (00602d)**

- Do not refill, disassemble, puncture or expose shock to flames.
- Replacement and disposal should only be done by an authorized Harley-Davidson dealer.

## Spark Plugs

**⚠WARNING**

**Disconnecting spark plug cable with engine running can result in electric shock and death or serious injury. (00464b)**

**⚠CAUTION**

**Do NOT pull on any electrical wires. Pulling on electrical wires may damage the internal conductor causing high resistance, which may result in minor or moderate injury. (00168a)**

Check the spark plugs at proper intervals. Refer to Regular Service Intervals: 2013 Softail Models.

1. Disconnect spark plug cables from plugs by pulling up on the molded connector caps.
2. Check spark plug type. Only use those spark plugs specified for your model motorcycle.
3. Check spark plug gap against specifications table.

   *NOTE:*

   *If a torque wrench is not available, tighten **new** spark plugs finger-tight and then tighten an additional one-quarter turn with a spark plug wrench.*

4. Always tighten to the proper torque. Spark plugs must be tightened to the torque specified for proper heat transfer. Refer to Electrical.
5. Connect each molded connector cap until the cap snaps firmly into place over the spark plug.

## Ignition

The engine in your motorcycle has been designed specifically to achieve optimum fuel economy within exhaust emission controls. Factory programmed ignition characteristics provide maximum engine performance and driveability.

## Air Cleaner

**⚠WARNING**

**Do not use gasoline or solvents to clean filter element. Flammable cleaning agents can cause an intake system fire, which could result in death or serious injury. (00101a)**

**⚠WARNING**

**Compressed air can pierce the skin and flying debris from**

**Compressed air can pierce the skin and flying debris from compressed air could cause serious eye injury. Wear safety glasses when working with compressed air. Never use your hand to check for air leaks or to determine air flow rates. (00061a)**

**CAUTION**

**Install air filter before running engine. Failure to do so can draw debris into the engine and could result in engine damage. (00207a)**

1. Refer to Regular Service Intervals: 2013 Softail Models. Remove air cleaner cover and inspect filter element at proper intervals. When operated under dusty conditions, inspect more often.
2. Wash the paper/wire mesh filter element in lukewarm water with a mild detergent. Do not strike filter element on a hard surface to dislodge dirt.
3. Allow filter element to either air dry or blow it dry, from the inside, with low pressure air. Do NOT use air cleaner filter oil on the Harley-Davidson paper/wire mesh air filter element.
4. Hold the filter element up to a strong light source. The element is sufficiently clean if light is uniformly visible through the media.
5. Replace the filter element if damaged or if filter media cannot be adequately cleaned.
6. Install baseplate gasket, air filter element and bracket if removed. Tighten bracket screws. Refer to Air Cleaner Fastener Torque.
7. Install air cleaner cover. Apply a drop of LOCTITE THREADLOCKER 243 (blue) to the threads of the cover screw and tighten. Refer to Air Cleaner Fastener Torque.

**Air Cleaner Fastener Torque**

| FASTENER | TORQUE |
|---|---|
| Air filter element bracket screws | 108-132 in-lbs (12.2-14.9 Nm) |
| Air filter cover screw | 36-60 in-lbs (4.1-6.8 Nm) |

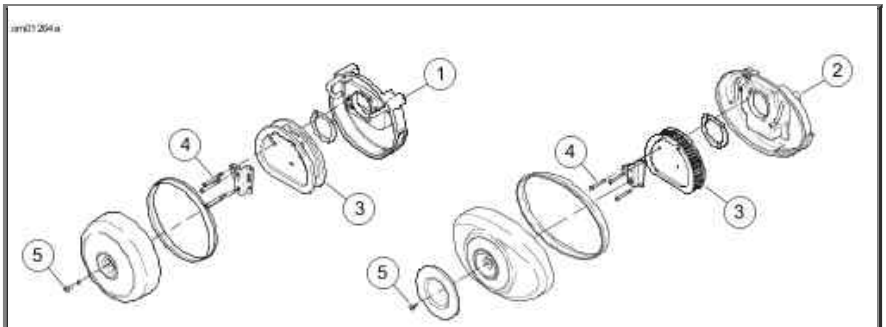


1. Air cleaner assembly (Domestic/Canada FLS and FXS models)
2. Air cleaner assembly (Other Softail models)
3. Air filter element
4. Bracket screws (3)
5. Cover screw

**Air Cleaner**

## Headlamp Bulb Replacement

**⚠WARNING**

**Handle bulb carefully and wear eye protection. Bulb contains gas under pressure, which, if not handled carefully, could cause serious eye injury. (00062b)**

**CAUTION**

**When replacement is required, use only the specified sealed beam unit or bulb, available from a Harley-Davidson dealer. An improper wattage sealed beam or bulb, can cause charging system problems. (00209a)**

If a headlamp bulb filament burns out, the bulb must be discarded and a **new** bulb installed. Refer to Bulb Chart for bulbs.

## Bulb Removal

---

**⚠WARNING**

**To prevent accidental vehicle start-up, which could cause death or serious injury, remove main fuse before proceeding. (00251b)**

*NOTE:*

*Make note of components during disassembly to aid in correct assembly.*

1. Remove main fuse. See Fuses
2. See Headlamp Bulbs (Typical). Remove trim ring hardware (1). Remove trim ring (2).
3. Remove mounting ring (3) and bumper, if equipped.
4. Disconnect headlamp connector (8) from bulb (5).
5. Remove rubber boot (6), if equipped, from back of headlamp lens (4).
6. Remove wire retaining clip (7) from headlamp base.
7. Remove bulb from headlamp assembly.
8. **For International Models Only:** Rotate boot (10) one-quarter turn and remove bulb assembly from housing. Pull position bulb (9) to remove from boot.

## Bulb Installation

---

**CAUTION**

**Never touch the quartz bulb. Fingerprints will etch the glass and decrease bulb life. Handle the bulb with paper or a clean, dry cloth. Failure to do so could result in bulb damage. (00210b)**

*NOTE:*

*When installing a **new** bulb, be sure connector contacts are clean for good electrical contact.*

1. Install **new** bulb and assemble the headlamp components.
2. **For International Models Only:** Install **new** bulb in boot. Install boot in housing and rotate one-quarter turn.

3. Verify slots and tabs in headlamp and trim ring are aligned.
4. Install rubber boot with word TOP at the top of the headlamp lens assembly.
5. Connect the headlamp connector.
6. Install bumper, if equipped.
7. Install trim ring and hardware.
8. Install main fuse.

**⚠WARNING**

**Be sure that all lights and switches operate properly before operating motorcycle. Low visibility of rider can result in death or serious injury. (00316a)**

9. Turn ignition on and test for proper operation.
10. If necessary, align headlamp assembly. See Headlamp Alignment.

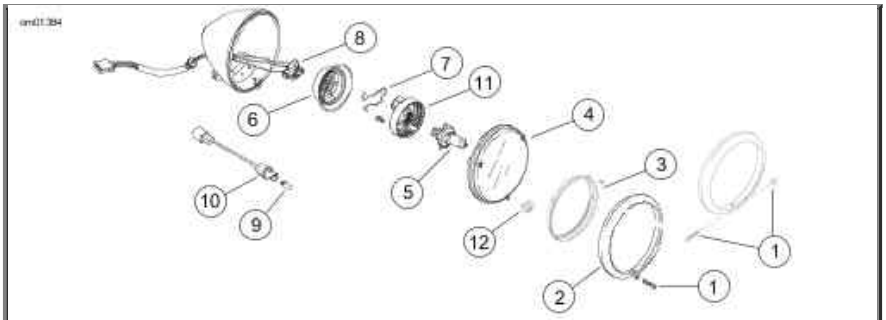


1. Trim ring hardware
2. Trim ring
3. Mounting ring
4. Headlamp lens
5. Bulb
6. Rubber boot
7. Wire retaining clip
8. Headlamp connector
9. Bulb, position - HDI models only
10. Boot - HDI models only
11. Base
12. Bumper

**Headlamp Bulbs (Typical)**

## Headlamp Alignment

**⚠WARNING**

**The automatic-on headlamp feature provides increased visibility of the rider to other motorists. Be sure headlamp is on at all times. Poor visibility of rider to other motorists can result in death or serious injury. (00030b)**

*NOTE:*

*Adjust beam headlamps to converge into one pattern.*

1. Check the tire pressure.
2. Adjust the suspension to the weight of the rider.

3. Fill fuel tank or add ballast to equal the weight of the fuel needed.

   *NOTE:*

   *See Headlamp Alignment. Draw a perpendicular line (1) on the floor. For best results, choose an area with minimum light.*

4. Draw a vertical line (2) on the wall.

5. Position the front axle 25 ft 7.6 m from wall.

   *NOTE:*

   *As the weight of the rider will compress the suspension slightly, have a person whose weight is approximately the same as that of the rider sit on the motorcycle.*

6. With the vehicle laden and upright, point the front wheel straight forward at wall. Measure the distance (4) from the floor to the center of the HIGH BEAM bulb.

7. Draw a horizontal line (5) through the vertical line on the wall that is 2.1 in 53.3 mm lower than the measured bulb centerline.

8. Verify headlamp alignment. With the motorcycle on, set the headlamp switch to HIGH beam.

   a. The center of the hot spot (brightest area of light beam) should be centered where the two lines intersect.

   b. Adjust headlamp alignment if necessary.

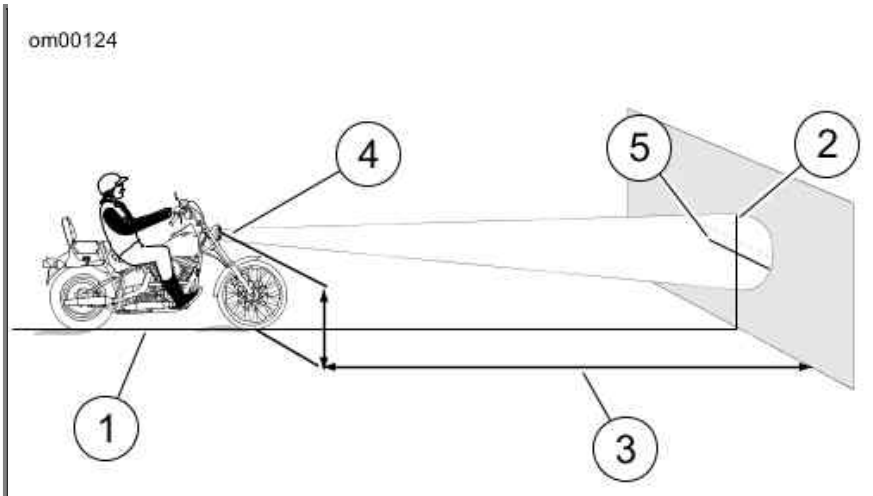


1. Perpendicular line
2. Vertical line
3. 25 ft (7.6 m)
4. High beam bulb centerline
5. Horizontal line 2.1 in (53.3 mm) lower than bulb centerline

**Headlamp Alignment**

## Headlamp Adjustment

1. See Headlamp Adjustment (typical). Loosen horizontal adjustment fastener (2). Tilt headlamp left or right to direct light beam straight ahead.

2. Tighten horizontal adjustment fastener (2) to 30-35 ft-lbs (40.7-47.5 Nm).

3. Loosen vertical adjustment fastener (1). Tilt headlamp up or down in relationship to the horizontal line from the headlamp alignment inspection.

4. Tighten vertical adjustment fastener (1) to:

a. **FXS, FXSB:** 30-35 ft-lbs (40.7-47.5 Nm).

b. **All but FXS, FXSB:** 35-45 ft-lbs (47.5-61.0 Nm).

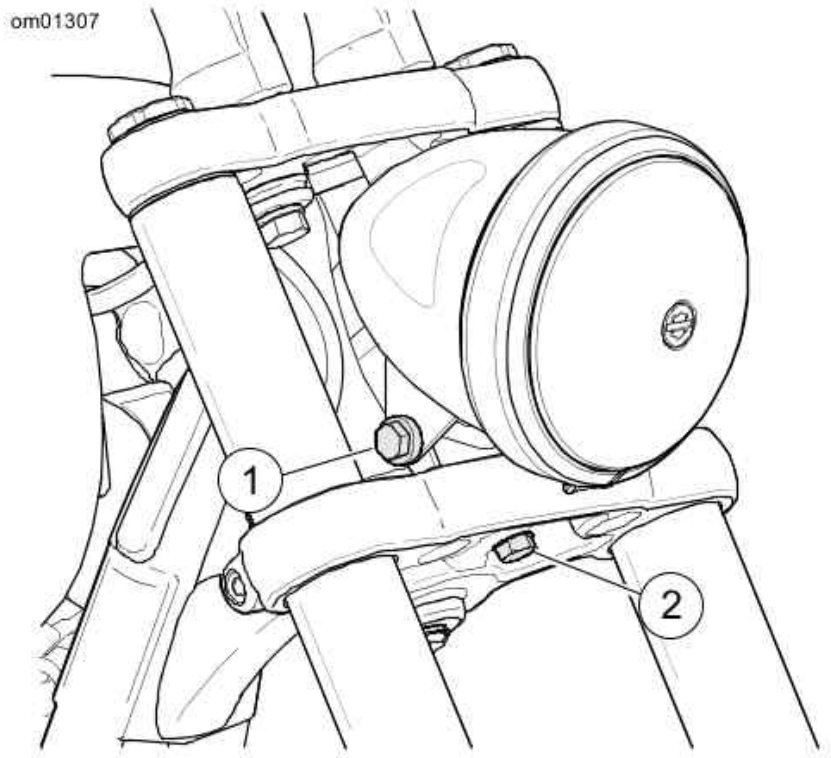


1. Vertical adjusting bolt
2. Horizontal adjusting bolt

**Headlamp Adjustment (typical)**

## LED Rear Turn Signal/Tail Lamps: International FXS, FLS and FXSB Models

On FXS, FLS and FXSB models (except Domestic and Canada configurations), the rear turn signal/tail lamps are LED assemblies with no replaceable bulbs. Caps on rear turn signals are not removable. See an authorized Harley-Davidson dealer for assembly replacement.

## Turn Signal Bulb Replacement: Bullet Style

1. See Remove Lens. Insert a coin or the blade of a small screwdriver into the notch at the bottom of the lens cap. Carefully twist until the lens cap pops out of the lamp housing.
2. Push bulb in and rotate counterclockwise. Pull bulb from socket.
3. Inspect condition of electrical contacts in socket. If necessary, clean with a small wire brush and electrical contact cleaner.
4. Apply ELECTRICAL CONTACT LUBRICANT to contacts in socket and at bottom of **new** bulb.
5. Align pins on **new** bulb with pin guides in bulb socket. Push bulb in and turn clockwise to lock in place.
6. Snap lens cap onto the lamp housing with notch at bottom.

**⚠WARNING**

**Be sure that all lights and switches operate properly before operating motorcycle. Low visibility of rider can result in death or serious injury. (00316a)**

7. Test lamp operation.

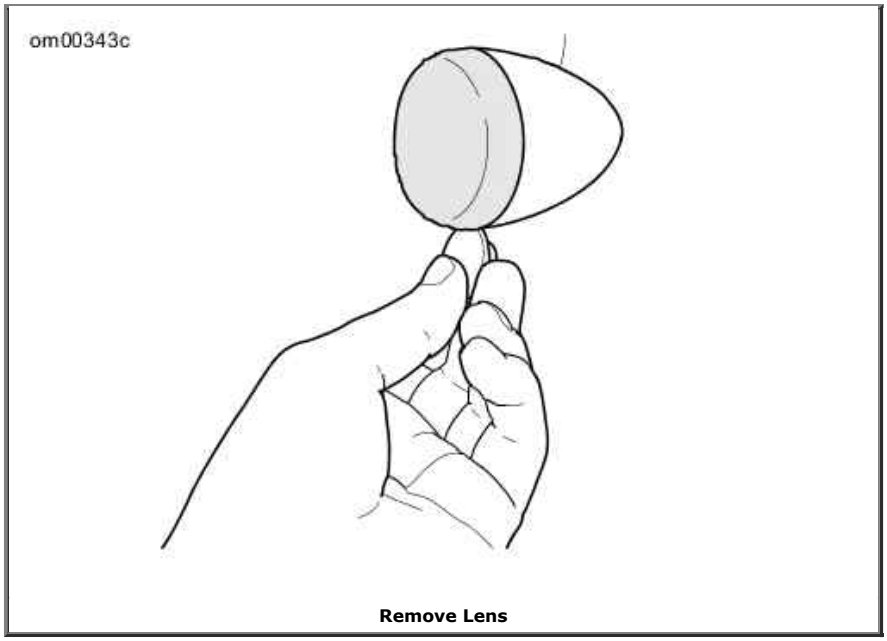


Remove Lens

## Turn Signal Bulb Replacement: Flat Lens Style

1. See Turn Signal Lamp Assembly: Flat Lens Style. Remove two screws to release lens from lamp housing.
2. Push bulb in and rotate counterclockwise to remove bulb from socket.
3. Inspect condition of electrical contacts in socket. If necessary, clean with a small wire brush and electrical contact cleaner.
4. Apply ELECTRICAL CONTACT LUBRICANT to contacts in socket and at bottom of **new** bulb.
5. Align index pins on **new** bulb with pin guides in bulb socket. Push bulb in and turn clockwise to lock in place.
6. Seat lens in lamp and install two screws.

**⚠WARNING**

**Be sure that all lights and switches operate properly before operating motorcycle. Low visibility of rider can result in death or serious injury. (00316a)**

7. Test lamp operation.

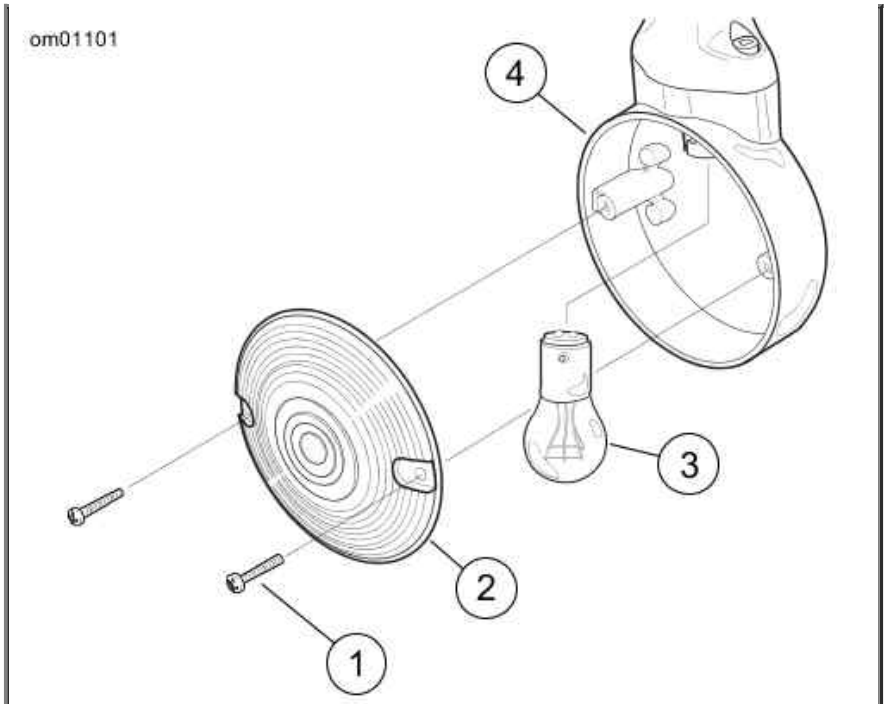


1. Screws (2)
2. Lens
3. Bulb
4. Lamp housing

**Turn Signal Lamp Assembly: Flat Lens Style**

## Tail Lamp Bulb Replacement: Standard Style

1. See Tail Lamp Assembly. Turn ignition switch off.
2. Remove two screws and lens from base.

   *NOTE:*

   *Disconnect 4-Pin multilock connector from circuit board to simplify bulb removal.*

3. Remove bulb assembly from lens. Remove bulb from socket.
4. Coat base of **new** bulb with ELECTRICAL CONTACT LUBRICANT. Install **new** bulb in socket.
5. Install bulb assembly to lens.
6. If removed, connect 4-pin multilock connector to circuit board.
7. Install lens to base with two screws. Tighten to 20-24 in-lbs (2.3-2.7 Nm).

**⚠WARNING**

**Be sure that all lights and switches operate properly before operating motorcycle. Low visibility of rider can result in death or serious injury. (00316a)**

8. Turn ignition on and test for proper tail lamp operation.

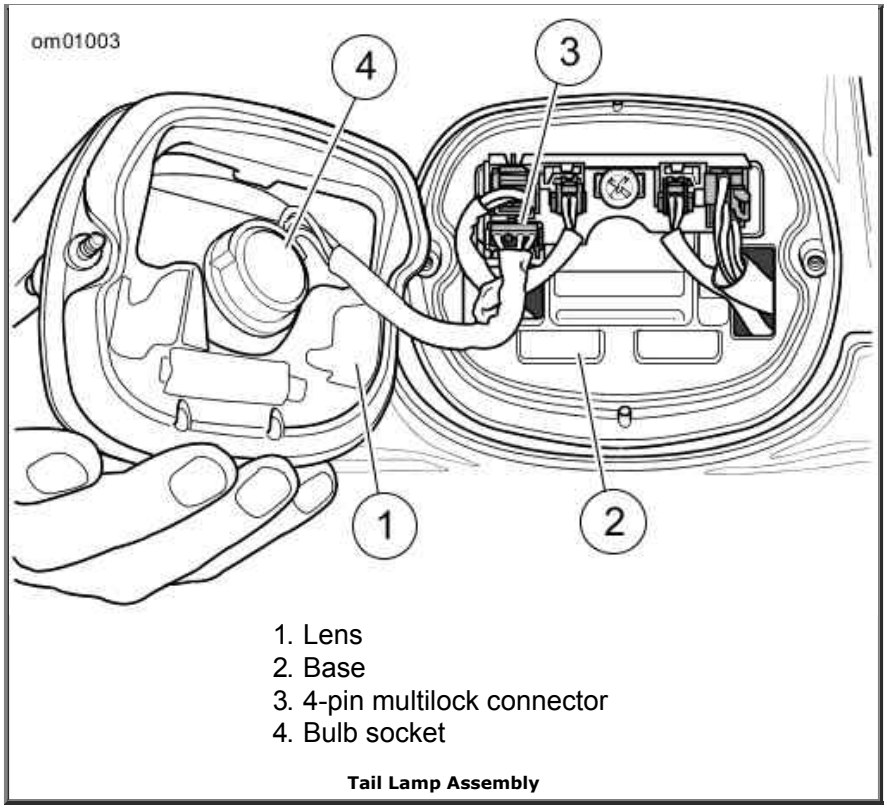

**Tail Lamp Assembly**

## Tail Lamp Bulb Replacement: Tombstone Style

1. See Tail Lamp Assembly: Tombstone Style. Make certain ignition switch is turned off.
2. Remove three screws (1) to detach the tail lamp assembly (2) from base.
3. Push bulb (3) into socket and rotate one-quarter turn counterclockwise. Pull bulb from socket.
4. Inspect condition of electrical contacts in socket. If necessary, clean with a small wire brush and electrical contact cleaner.
5. Coat base of **new** bulb with ELECTRICAL CONTACT GREASE (Part No. 99861-90).
6. Orient index pins on **new** bulb with pin guides inside bulb socket. Push bulb in and turn clockwise to lock in place.
7. Install tail lamp assembly to base with three screws. Tighten screws to 20-24 in-lbs (2.3-2.7 Nm).

**⚠WARNING**

**Be sure that all lights and switches operate properly before operating motorcycle. Low visibility of rider can result in death or serious injury. (00316a)**

8. Turn ignition on and test for proper tail lamp operation.

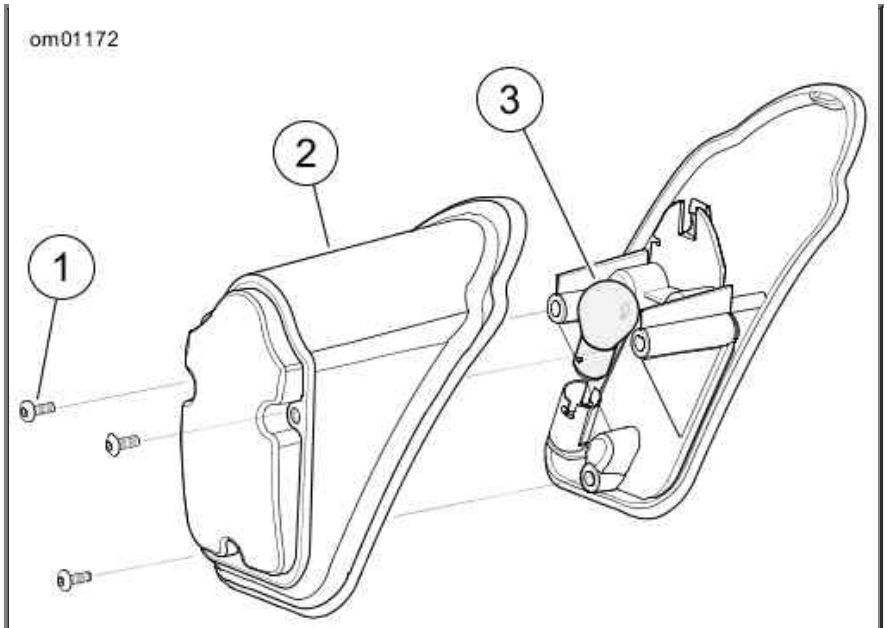


1. Screws (3)
2. Tail lamp assembly
3. Bulb

**Tail Lamp Assembly: Tombstone Style**

### Alternator/Voltage Regulator

## Charging Rate

The alternator output is controlled and changed to direct current by the voltage regulator.

- The voltage regulator increases charging rate when battery is low or lamps are lit.
- The voltage regulator decreases charging rate when battery charge is up.

**CAUTION**

**It is possible to overload your vehicle's charging system by adding too many electrical accessories. If the combined electrical accessories operating at any one time consume more electrical current than the vehicle's charging system can produce, the electrical consumption can discharge the battery and cause damage to the vehicle's electrical system. See an authorized Harley-Davidson dealer for advice about the amount of current consumed by additional electrical accessories or for necessary wiring changes. (00211c)**

*NOTES:*

- *This unit requires no interval attention. If any electrical system trouble is experienced that might be traceable to the alternator or voltage regulator, the motorcycle should be taken to a Harley-Davidson dealer who has the necessary electrical testing equipment to give the required attention.*
- *For model specific information regarding the voltage regulator, refer to the appropriate Service Manual or see a Harley-Davidson dealer.*

### Battery

## Type

Your motorcycle uses an Absorbed Glass Mat (AGM) battery. The AGM battery is permanently sealed, valve regulated, maintenance-free, lead/calcium and sulfuric acid battery. All batteries are shipped precharged and ready to be put into service. Do not attempt to open the battery for any reason.

**Antidotes for Battery Acid**

| CONTACT | TREATMENT |
|---|---|
| External | Flush with water. |
| Internal | Drink large quantities of milk or water, followed by milk of magnesia, vegetable oil or beaten eggs. Get immediate medical attention. |
| Eyes | Flush with water. Get immediate medical attention. |

**⚠WARNING**

**Batteries contain sulfuric acid, which could cause severe burns to eyes and skin. Wear a protective face shield, rubberized gloves and protective clothing when working with batteries. KEEP BATTERIES AWAY FROM CHILDREN. (00063a)**

**⚠WARNING**

**Explosive hydrogen gas, which escapes during charging, could cause death or serious injury. Charge battery in a well-ventilated area. Keep open flames, electrical sparks and smoking materials away from battery at all times. KEEP BATTERIES AWAY FROM CHILDREN. (00065a)**

**⚠WARNING**

**Batteries, battery posts, terminals and related accessories contain lead and lead compounds, and other chemicals known to the State of California to cause cancer, and birth defects or other reproductive harm. Wash hands after handling. (00019e)**

**⚠WARNING**

**Never remove warning label attached to top of battery. Failure to read and understand all precautions contained in warning, could result in death or serious injury. (00064a)**

1. Contents are corrosive
2. Wear safety glasses
3. Contents are explosive
4. Keep flames away
5. Read instructions
6. Keep away from children

**Battery Warning Label**

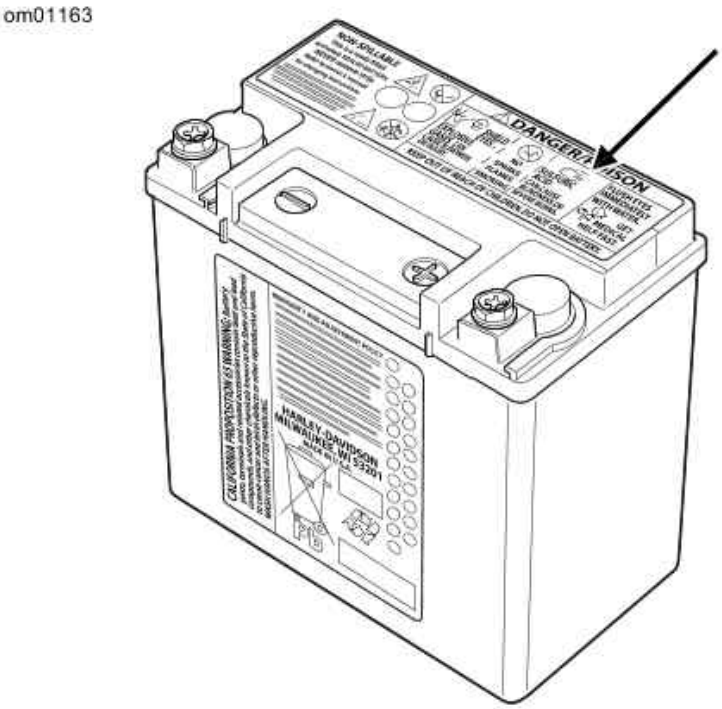


**Battery Warning Label**

## Voltmeter Test

The voltmeter test provides a general indicator of battery condition. Check the voltage of the battery to verify that it is in a 100 percent fully-charged condition. If the open circuit (disconnected) voltage reading is below 12.7 V, charge the battery and then re-check the voltage after the battery has set for one to two hours. Refer to Voltmeter Test.

**Voltmeter Test**

| READING IN VOLTS | PERCENT OF CHARGE |
|---|---|
| 12.7 | 100 |
| 12.6 | 75 |
| 12.3 | 50 |
| 12.0 | 25 |
| 11.8 | 0 |

## Cleaning and Inspection

Battery top must be clean and dry. Dirt and electrolyte on top of the battery can cause battery to self-discharge.

1. Clean battery top.
2. Clean cable connectors and battery terminals using a wire brush or fine grit sandpaper to remove any oxidation.
3. Inspect and clean the battery screws, clamps and cables. Check for breakage, loose connections and corrosion.
4. Check the battery posts for melting or damage caused by overtightening.
5. Inspect the battery for discoloration, a raised top or a warped or distorted case. This might indicate that the battery has been frozen, overheated or overcharged.
6. Inspect the battery case for cracks or leaks.

## Charging

An automatic, constant monitoring battery charger/tender with a charging rate of 5 amps or less at less than 14.6 volts is recommended. The use of constant current chargers (including trickle chargers) to charge sealed AGM batteries is not recommended. Any overcharge will cause dry-out and premature battery failure. Never charge a battery without first reviewing the instructions for the charger being used. In addition to the manufacturer's instructions, follow these general safety precautions.

Charge the battery if any of the following conditions exist:

- Vehicle lamps appear dim.
- Electric starter sounds weak.
- Battery has not been used for an extended period of time.

**⚠WARNING**

**Explosive hydrogen gas, which escapes during charging, could cause death or serious injury. Charge battery in a well-ventilated area. Keep open flames, electrical sparks and smoking materials away from battery at all times. KEEP BATTERIES AWAY FROM CHILDREN. (00065a)**

**⚠WARNING**

**Batteries contain sulfuric acid, which could cause severe burns to eyes and skin. Wear a protective face shield, rubberized gloves and protective clothing when working with batteries. KEEP BATTERIES AWAY FROM CHILDREN. (00063a)**

1. Perform a voltmeter test to determine the state of charge. If battery needs to be charged, proceed to the next step.
2. Place the battery on a level surface.

**⚠WARNING**

**Unplug or turn OFF battery charger before connecting charger cables to battery. Connecting cables with charger ON can cause a spark and battery explosion, which could result in death or serious injury. (00066a)**

**⚠WARNING**

**Connect positive (+) battery cable first. If positive (+) cable should contact ground with negative (-) cable connected, the resulting sparks can cause a battery explosion, which could result in death or serious injury. (00068a)**

**⚠WARNING**

**Disconnect negative (-) battery cable first. If positive (+) cable should contact ground with negative (-) cable connected, the resulting sparks can cause a battery explosion, which could result in death or serious injury. (00049a)**

**CAUTION**

**Do not reverse the charger connections described in the following steps or the charging system of the motorcycle could be damaged. (00214a)**

*NOTES:*

- *Do not use chargers with excessively high voltage designed for flooded batteries or excessively high current designed for much larger batteries. Charging should be limited to no more than 5 amps at no more than 14.6 volts.*
- *Most automatic, constant monitoring battery chargers are completely automatic and can be left connected to both AC power and to the battery that is being charged. When leaving this type of charger connected for extended periods of time, periodically check the battery to see if it is unusually warm. This is an indication that the battery may have a weak cell or internal short. Read the manufacturers instructions for the charger being used.*

3. Connect the red battery charger lead to positive (+) terminal of the battery.
4. Connect the black battery charger lead to negative (-) terminal of the battery.

   *NOTE:*

   *If the battery is still in the vehicle, connect the negative lead to the chassis ground. Make sure that the ignition and all electrical accessories are turned off.*

5. Step away from the battery and turn on the charger.

**⚠WARNING**

**Unplug or turn OFF battery charger before disconnecting charger cables from battery. Disconnecting clamps with charger ON can cause a spark and battery explosion, which could result in death or serious injury. (00067a)**

6. After the battery is fully charged, turn OFF the charger and disconnect the black battery charger lead to the negative (-) terminal of the battery.
7. Disconnect the red battery charger lead to the positive (+) terminal of the battery.
8. Mark the charging date on the battery.

## Storage

If the motorcycle will not be operated for several weeks, such as during the winter season, remove the battery from the motorcycle and fully charge.

If the motorcycle is to be stored with the battery installed, it will be necessary to connect a automatic, constant monitoring charger/tender to maintain charge. See an authorized dealer for more information.

A battery that is removed from the vehicle is affected by self-discharge. A battery that is stored in the vehicle is affected by both self-discharge and, more significantly, parasitic loads. Parasitic loads occur from things like diode leakage and maintaining computer memory with the vehicle off.

- Batteries self-discharge at a faster rate at higher ambient temperatures.
- To reduce the self-discharge rate, store battery in a cool, dry place.
- Charge the battery every two weeks if stored in the vehicle.
- Charge the battery once per month if stored out of the vehicle.

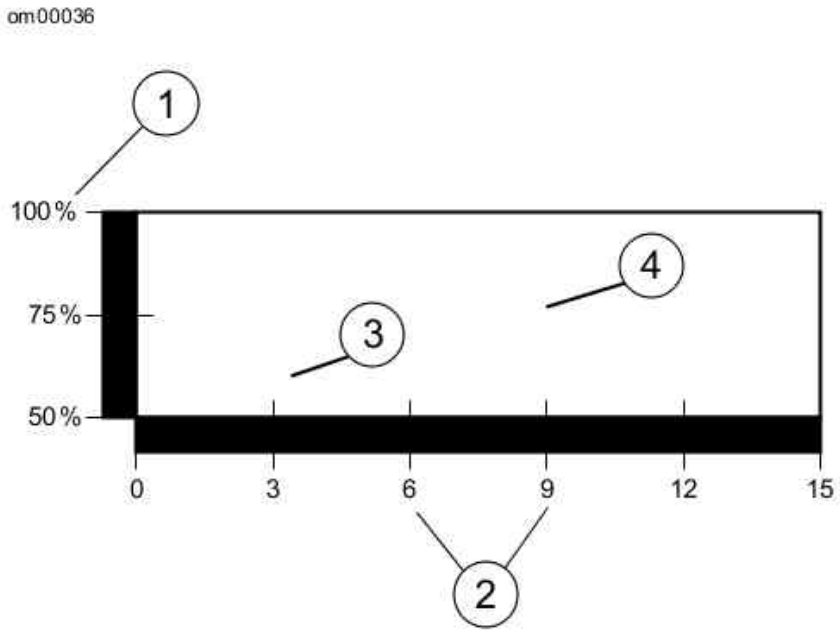


1. Capacity
2. Months of non-use
3. Measured at 105 °F (40 °C)
4. Measured at 77 °F (25 °C)

**Effective Rate of Temperature on Battery Self-discharging Rate**

### Battery

## Disconnection and Removal

**⚠WARNING**

**Disconnect negative (-) battery cable first. If positive (+) cable should contact ground with negative (-) cable connected, the resulting sparks can cause a battery explosion, which could result in death or serious injury. (00049a)**

1. Remove the seat. See Seats and follow procedure for the appropriate model.

2. If equipped with security system siren, turn the ignition switch ON with the hands-free fob present to disarm the security system.
3. See Battery Connections. Loosen bolt and remove battery negative cable (black) from battery negative (-) terminal.
4. Loosen bolt and remove battery positive cable (red) from battery positive (+) terminal.
5. Lift battery from battery box within oil tank cavity.

## Installation and Connection

---

**CAUTION**

**Do not over-tighten bolts on battery terminals. Use recommended torque values. Over-tightening battery terminal bolts could result in damage to battery terminals. (00216a)**

**⚠WARNING**

**Connect positive (+) battery cable first. If positive (+) cable should contact ground with negative (-) cable connected, the resulting sparks can cause a battery explosion, which could result in death or serious injury. (00068a)**

**⚠WARNING**

**Do not allow positive (+) battery cable to contact ground with negative (-) cable connected. Resulting sparks can cause a battery explosion, which could result in death or serious injury. (00069a)**

1. Place the fully charged battery into the battery box located within oil tank cavity, terminal side forward.
2. Attach battery positive cable (+) (red) to battery positive (+) terminal.
3. Tighten fastener to 60-70 in-lbs (6.8-7.9 Nm).
4. Attach battery negative cable (black) to battery negative (-) terminal.
5. Tighten fastener to 60-70 in-lbs (6.8-7.9 Nm).

**CAUTION**

**Keep battery clean and lightly coat terminals with petroleum jelly to prevent corrosion. Failure to do so could result in damage to battery terminals. (00217a)**

6. Apply a light coat of petroleum jelly or corrosion retardant material to both battery terminals.

**⚠WARNING**

**After installing seat, pull upward on seat to be sure it is locked in position. While riding, a loose seat can shift causing loss of control, which could result in death or serious injury. (00070b)**

7. Install seat. See Seats and follow procedure for the appropriate model.

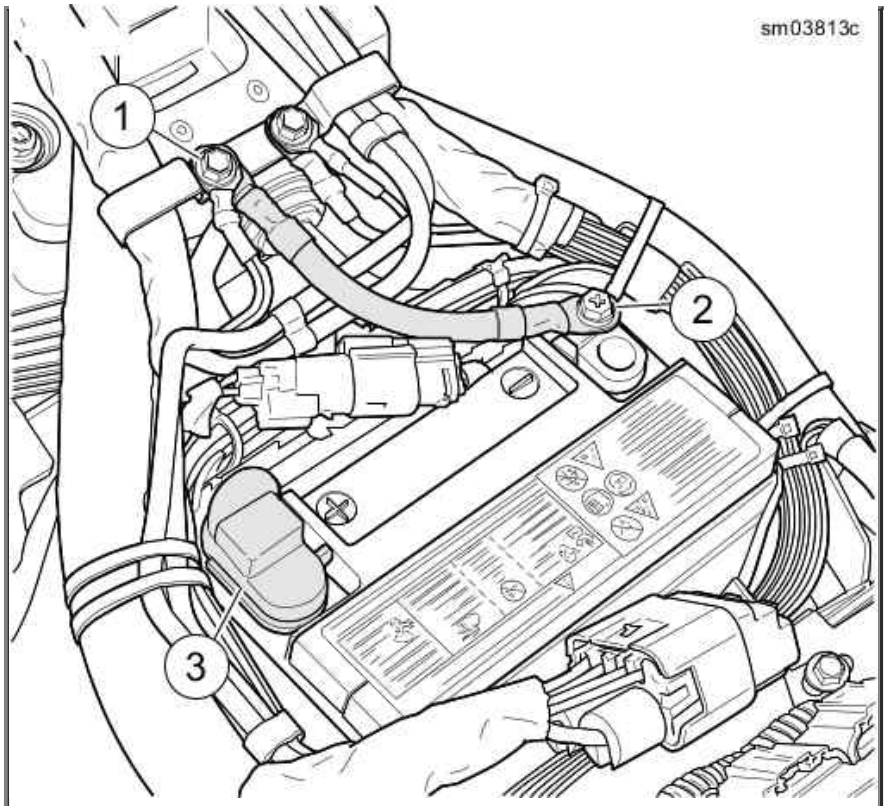


1. Battery frame ground
2. Negative battery cable
3. Positive battery cable

**Battery Connections**

## Jump Starting

Jump starting a motorcycle is typically not recommended. However, there may be circumstances when it is necessary to do so. If a jump-start is necessary, use the following procedure.

**⚠WARNING**

**Be sure jumper cables touch only appropriate battery terminals or ground. Allowing jumper cables to touch each other can result in sparks and a battery explosion, which could result in death or serious injury. (00072a)**

**⚠WARNING**

**Explosive hydrogen gas, which escapes during charging, could cause death or serious injury. Charge battery in a well-ventilated area. Keep open flames, electrical sparks and smoking materials away from battery at all times. KEEP BATTERIES AWAY FROM CHILDREN. (00065a)**

**CAUTION**

**Be sure both vehicles have the same battery voltage when jump starting. Connecting vehicles with different system voltages can result in vehicle damage. (00220c)**

*NOTES:*

- *This procedure presumes the BOOSTER battery is in another vehicle. DO NOT jump start from a running booster vehicle. The high output charging systems on some vehicles can damage the electrical components on the motorcycle.*
- *Make sure the motorcycle and the BOOSTER vehicle are not touching one another.*

1. Turn off all unnecessary lamps and accessories.

## Positive Cable

2. See Jump Start Cable Connections. Connect one end of a jumper cable to the DISCHARGED battery positive (+) terminal (1).
3. Connect the other end of the same cable to the BOOSTER battery positive (+) terminal (2).

## Negative Cable

**⚠WARNING**

**Do not connect negative (-) cable to or near the discharged battery negative (-) terminal. Doing so could cause a spark and explosion, which could result in death or serious injury. (00073a)**

4. Connect one end of a jumper cable to the BOOSTER battery negative (-) terminal (3).

**CAUTION**

**Do not connect the negative (-) cable to painted or chrome parts. Doing so could result in discoloration at the attachment point. (00221a)**

5. Connect other end of the same cable (4) to a safe ground, (away from the DISCHARGED battery).
6. Start motorcycle.
7. Disconnect cables in reverse order of Steps 2, 3, 4, 5; that is: Steps 5, 4, 3, 2.

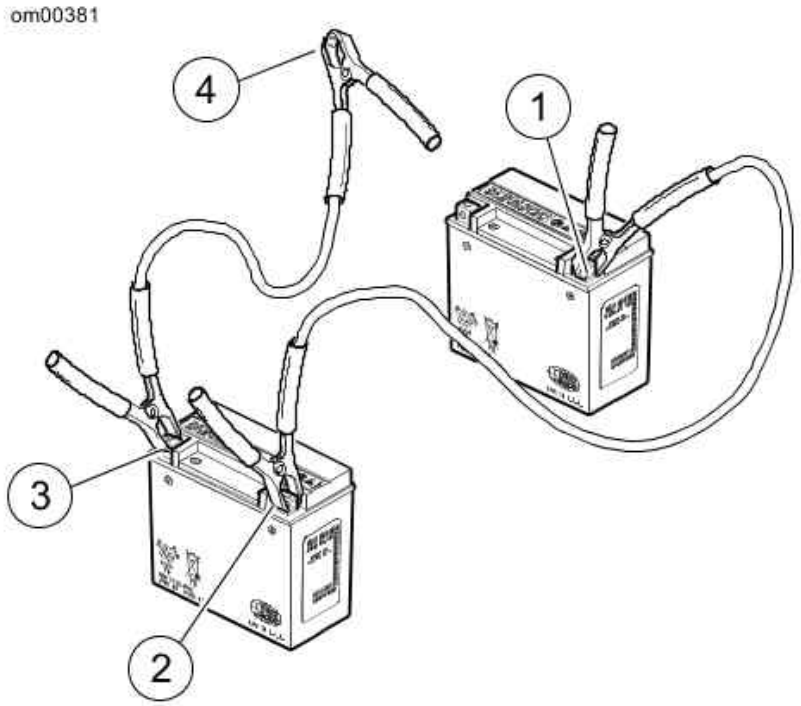


1. Discharged battery positive (+) terminal
2. Booster battery positive (+) terminal
3. Booster battery negative (-) terminal
4. Ground

**Jump Start Cable Connections**

**Fuses**

## Fuses

See Fuse Block. The electrical circuits are protected by three fuses. Individual vehicle circuits are protected by the Body Control Module (BCM).

**Main (1):** A 40A fuse that protects all the circuits including those protected by the 15A Battery fuse. Failure of this fuse will cause the motorcycle to stop running. See a Harley-Davidson dealer.

**P&A (2):** A 15A fuse protects the circuits of any installed accessories.

**Battery (3):** A 15A fuse that protects all the circuits. If the battery fuse fails while the engine is running, the engine will continue to run and critical circuits like the ABS brakes will continue to function. The failure of this fuse will trigger a diagnostic code. See a Harley-Davidson dealer.

## Removal

1. If equipped with security system siren, turn the ignition to ON with the fob present to disarm the security system.
2. Remove the seat. See Seats.
3. See Fuse Block Location. Pull cover off fuse block.
4. See Fuse Block. Remove suspect fuse.

## Installation

**CAUTION**

**Always use replacement fuses that are of the correct type and amperage rating. Use of incorrect fuses can result in damage to electrical systems. (00222a)**

1. Install **new** fuse.
2. Place cover on fuse block.

**⚠WARNING**

**After installing seat, pull upward on seat to be sure it is locked in position. While riding, a loose seat can shift causing loss of control, which could result in death or serious injury. (00070b)**

3. Install seat. See Seats.

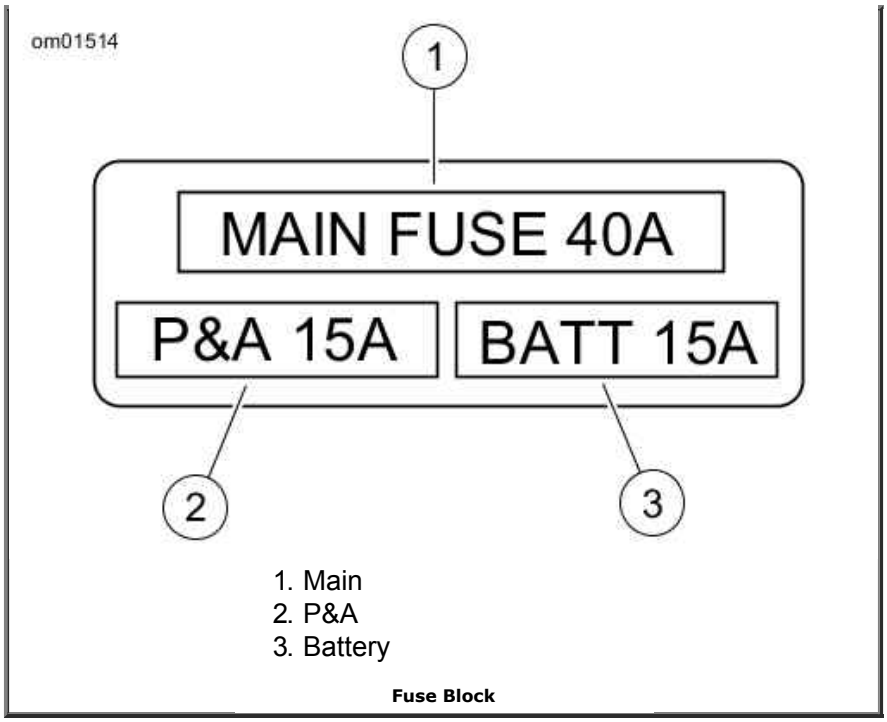


**Fuse Block**

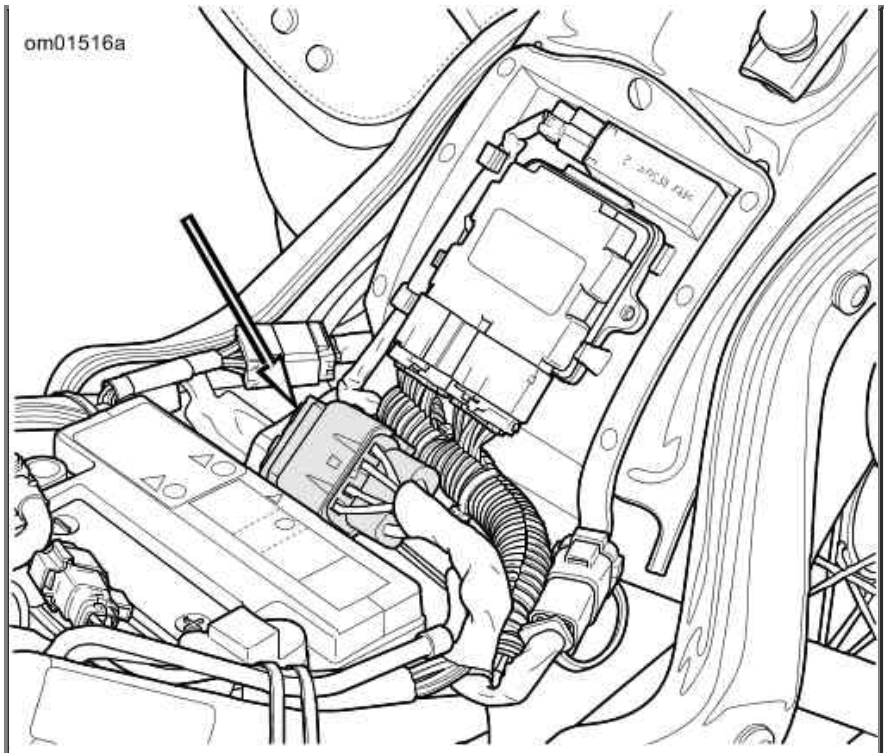


**Fuse Block Location**

## Seats

## General

See Seat Tongue (typical) and Frame Back. The seat has a tongue which engages a slot in the back end of the frame. Follow the appropriate procedure for your model motorcycle to remove or install the seat.

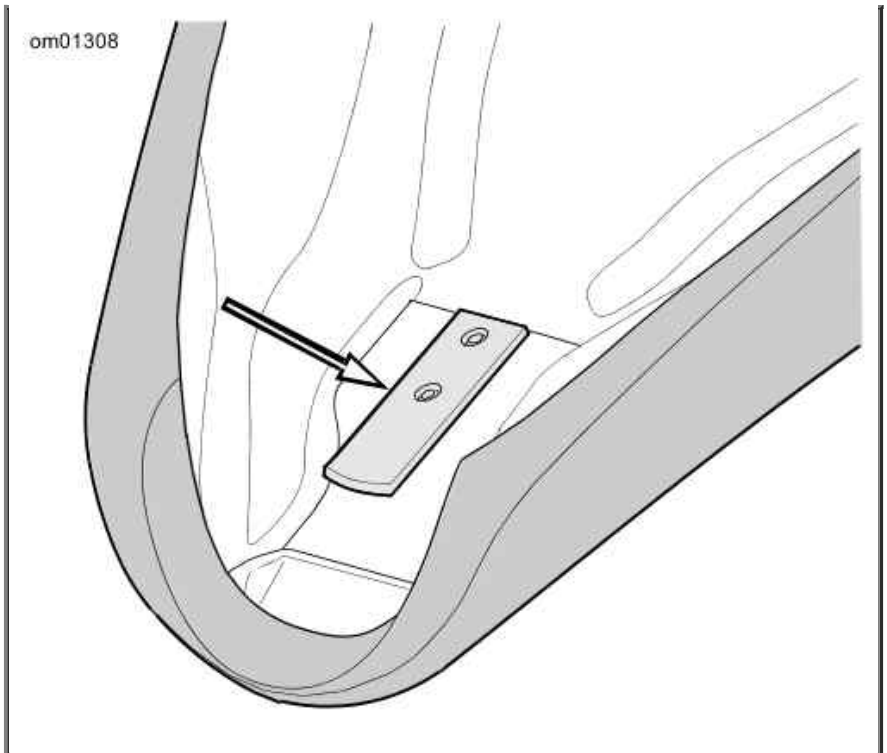


**Seat Tongue (typical)**

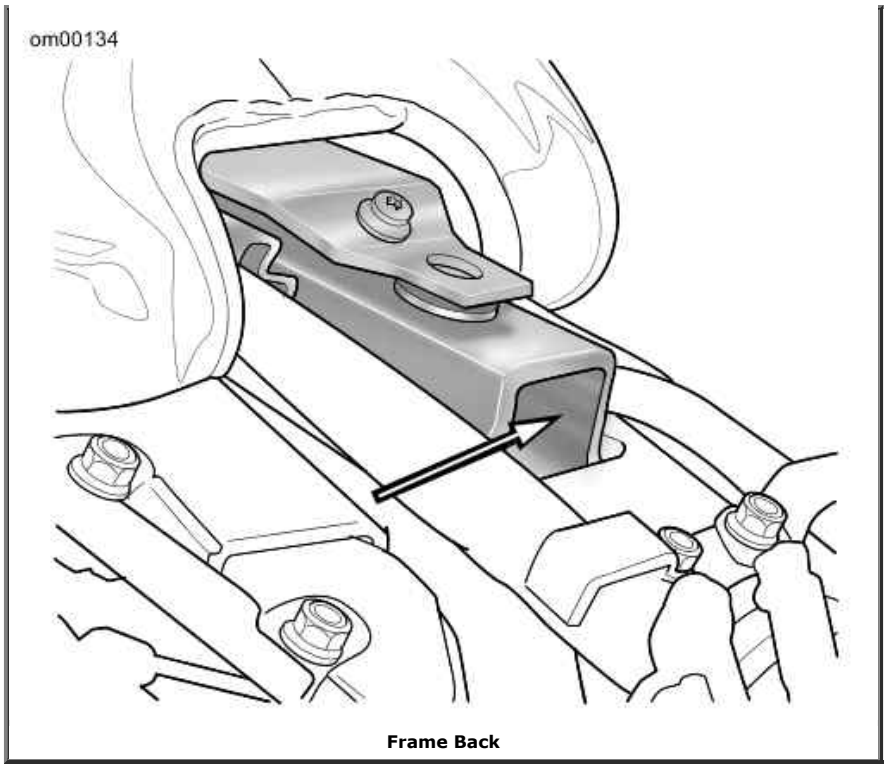

Frame Back

**Seats: FLSTN/FLSTF/FLSTFB/FXSB/FLSTC**

## Removal

**WARNING**

**After installing seat, pull upward on seat to be sure it is locked in position. While riding, a loose seat can shift causing loss of control, which could result in death or serious injury. (00070b)**

1. See Seat: FLSTN/FLSTF/FLSTFB/FXSB/FLSTC. Remove the thumbscrew (1).
2. Remove the passenger pillion (2).
3. Remove mounting nuts (4).
4. Raise the rear of the seat (5, 6, 7, or 8) off the mounting posts and slide seat tongue out of the frame.
5. Remove grab strap (3).

## Installation

1. See Seat: FLSTN/FLSTF/FLSTFB/FXSB/FLSTC. Install seat strap (3) on the mounting posts on rear fender.
2. Insert tongue at front of seat into the channel in the frame.
3. Install rear of seat on the mounting posts on rear fender. Install mounting nuts (4) and tighten.
4. Slide slots on passenger pillion (2) to engage the seat mounting nuts.
5. Install thumbscrew (1) and tighten.

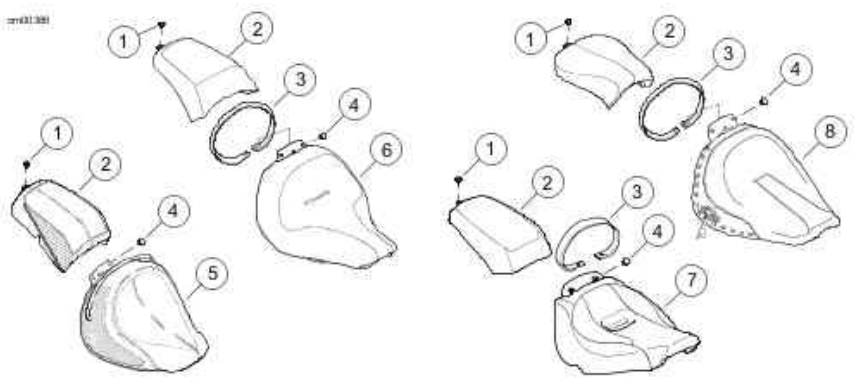

1. Thumbscrew
2. Pillion
3. Grab strap
4. Seat mounting nut (2)
5. Seat (FLSTN)
6. Seat (FLSTF/FLSTFB)
7. Seat (FXSB)
8. Seat (FLSTC)

**Seat: FLSTN/FLSTF/FLSTFB/FXSB/FLSTC**

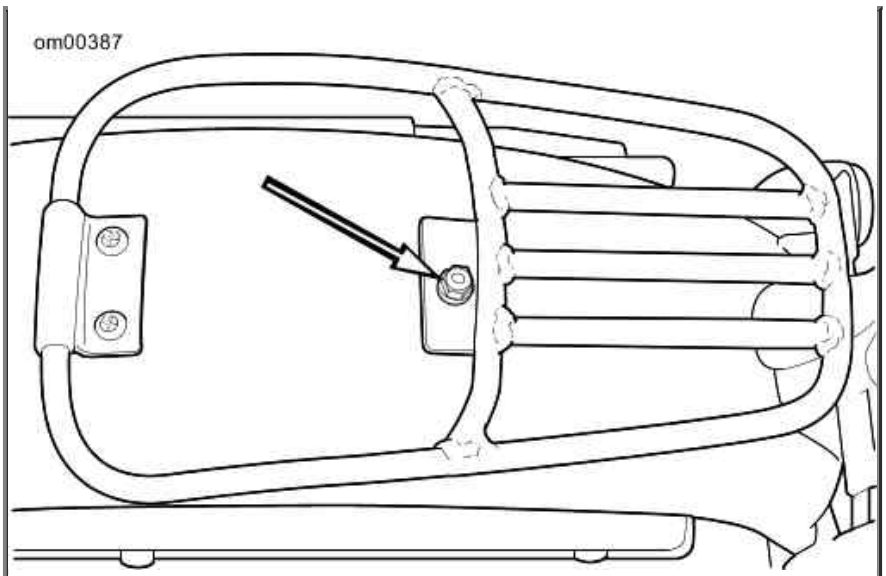


**Seat Mounting Stud (FLSTN)**

**Seats: FLS/FXS/FXST**

## Removal

1. See Seat: FLS/FXS/FXST. Remove seat mounting screw from top of rear fender.
2. See Seat Tongue (typical). Push seat rearward to free tongue at front of seat from slot or bracket in frame back.
3. Gently slide seat out of grab strap (FXS/FXST).
4. Remove seat from frame.

## Installation

1. Slide seat into grab strap (FXS/FXST).
2. Place seat on frame back.
3. Slide seat toward front of motorcycle until the tongue locks into the bracket or slot in the

frame back.

4. Push seat forward until rear fender seat retention nut is centered in hole of mounting bracket.

5. Hand-tighten the seat mounting screw.

**⚠WARNING**

**After installing seat, pull upward on seat to be sure it is locked in position. While riding, a loose seat can shift causing loss of control, which could result in death or serious injury. (00070b)**

6. Pull up on seat to verify that it is properly secured.

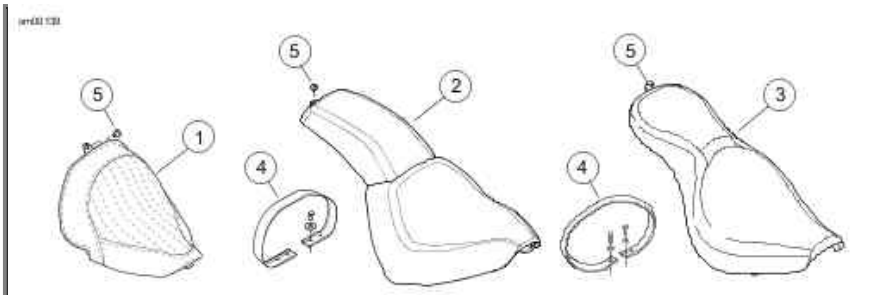


1. Seat (FLS)
2. Seat (FXS)
3. Seat (FXST)
4. Grab strap
5. Seat mounting screw

**Seat: FLS/FXS/FXST**

### Motorcycle Storage

## Placing Motorcycle in Storage

**CAUTION**

**Proper storage is important for the trouble-free operation of your motorcycle. See your Owner's Manual for storage recommendations or see a Harley-Davidson dealer. Improper storage procedures can lead to equipment damage. (00046a)**

If the motorcycle will not be operated for several months, such as during the winter season, there are several tasks which should be performed. These steps will protect parts against corrosion, preserve the battery and prevent the build-up of gum and varnish in the fuel system.

Store the motorcycle in a dry area with a stable temperature (if possible), away from any harsh chemicals or other substances such as fertilizers or salt.

**⚠WARNING**

**Do not store motorcycle with gasoline in tank within the home or garage where open flames, pilot lights, sparks or electric motors are present. Gasoline is extremely flammable and highly explosive, which could result in death or serious injury. (00003a)**

*NOTE:*

*Make a list of everything you do and fasten it to a handgrip. When you take the motorcycle out of storage, this list will be your reference/checklist to get your motorcycle in operating condition.*

1. Fill fuel tank and add a gasoline stabilizer. Use one of the commercially available gasoline stabilizers and follow the manufacturer's instructions.
2. Warm motorcycle to operating temperature. Change oil and turn engine over to circulate the new oil.
3. Check and adjust belt if necessary.
4. Check tire pressure. Refer to Specified Tires for specified pressure.
5. To protect the vehicle's body panels, engine, chassis and wheels from corrosion, follow the cosmetic care procedures described in the Care and Cleaning section of this owner's manual prior to storage.
6. Prepare battery for winter storage. See Battery.

**⚠WARNING**

**Explosive hydrogen gas, which escapes during charging, could cause death or serious injury. Charge battery in a well-ventilated area. Keep open flames, electrical sparks and smoking materials away from battery at all times. KEEP BATTERIES AWAY FROM CHILDREN. (00065a)**

*NOTE:*

- *If the motorcycle will be stored with the security system armed, connect a 750Ma SUPERSMART BATTERY TENDER 94654-98B to maintain battery charge.*
- *If the motorcycle will be stored with the security system disarmed, turn the motorcycle on while the hands-free fob is present. This will prevent the optional siren from sounding. Disconnect the negative battery cable and prepare battery for storage. See Battery.*

7. If motorcycle is to be covered, use a material such as light canvas that will breathe. Plastic materials that do not breathe promote the formation of condensation. Do not bend or tuck antennas under the cover. Either remove the antennas (if equipped) or allow them to protrude through the cover.

## Removing Motorcycle From Storage

---

**⚠WARNING**

**The clutch failing to disengage can cause loss of control, which could result in death or serious injury. Prior to starting after extended periods of storage, place transmission in gear and push vehicle back and forth several times to assure proper clutch disengagement. (00075a)**

*NOTE:*

*When lubricants have been contaminated by water, they often take on a milky white appearance. Always drain contaminated lubricants and refill with the appropriate Harley-Davidson lubricant prior to motorcycle operation.*

1. See Battery for proper battery care. Charge and install the battery.
2. Start the engine and run until it reaches normal operating temperature. Turn off engine.
3. Check engine oil level.

4. Check the transmission lubricant level.
5. Check controls to be sure they are operating properly. Operate the front and rear brakes, throttle, clutch and shifter.
6. Check steering for smoothness by turning the handlebars through the full operating range.

**⚠WARNING**

**Be sure tires are properly inflated, balanced, undamaged, and have adequate tread. Inspect your tires regularly and see a Harley-Davidson dealer for replacements. Riding with excessively worn, unbalanced, improperly inflated, overloaded or damaged tires can lead to tire failure and adversely affect stability and handling, which could result in death or serious injury. (00014b)**

7. Check tire pressure. Refer to Specified Tires for specified pressure.
8. Check overall tire condition. See Tire Replacement.
9. Check all electrical equipment and switches including the stop lamp, turn signals and horn for proper operation.
10. Check for any fuel, oil or brake fluid leaks.

**CAUTION**

**Turn engine over a few times to be sure there is no oil in the crankcase and that all oil has been pumped back into the oil tank. Stop engine and re-check oil level. Failure to do so can result in engine damage. (00071a)**

# Care and Cleaning

## Cleaning and General Care

Clean and protect the cosmetic surfaces on your motorcycle as often as possible to inhibit rust and corrosion. After the motorcycle is cleaned, polish and seal the motorcycle to create a sacrificial barrier of protection against the weather and harsh substances.

Refer to Recommended Cleaning and Care Products and Recommended Surface Care Products. Harley-Davidson cleaning products are tested extensively for use on vehicle surfaces and are formulated to be compatible with one another. See a Harley-Davidson dealer to purchase recommended cleaning products.

*NOTES:*

- *Use recommended surface care products. Do not use paper towels, terry cloths, cloth diapers or other materials with nylon fibers which can create fine scratches to surfaces.*
- *Some painted finishes and other surfaces may be scratched if gravel, dirt or grime are scraped across the surface during washing. Use clean towels and avoid rubbing sediments across gloss finishes.*
- *For repair of scratched surfaces, see a Harley-Davidson dealer.*

**⚠WARNING**

**Observe warnings on labels of cleaning compounds. Failure to follow warnings could result in death or serious injury. (00076a)**

**⚠WARNING**

**Do not wash brake discs with cleaners containing chlorine or silicone. Cleaners containing chlorine and silicone can impair brake function, which could result in death or serious injury. (00077a)**

**CAUTION**

**Do not use a pressure washer to clean motorcycle. Using a pressure washer can result in equipment damage. (00489c)**

**CAUTION**

**Use of abrasive products or powered buffing equipment will cause permanent cosmetic damage to body panels. Use only recommended products and techniques outlined in this manual to avoid damaging body panels. (00245b)**

**Recommended Cleaning and Care Products**

| PRODUCT | PART NO. | PURPOSE | FRAME | BODY PANELS | WHEELS | DENIM FINISH | OTHER |
|---|---|---|---|---|---|---|---|
| Sunwash® Bike Soap | 93600023 (U.S. Market) 93600077 (Non-U.S. Market) | Thorough washing of all surfaces with a wash mitt. Reduces hard water spots when washing a motorcycle in the sun. | Yes | Yes | Yes | Yes | |
| Quick Wash | 93600011 (16 oz) 93600012 (32 oz) (U.S. Market) 93600071 (16 oz) (Non-U.S. Market) | A quick wash for a lightly soiled motorcycle. Cleans all surfaces, sheeting action prevents spots. | Yes | Yes | Yes | Yes | |
| Bug Remover | 93600022 (U.S. Market) 93600075 (Non-U.S. Market) | Removes bugs from metal, plastic or painted surfaces. Also available as individual wipes (93600065). | Yes | Yes | Yes | Yes | |
| Glaze Poly Sealant | 93600026 (U.S. | Polishes windshields, painted | Yes | Yes | As applicable | No | |

| | | | | | | | |
|---|---|---|---|---|---|---|---|
| | Market)<br><br>93600079<br><br>(Non-U.S. Market) | surfaces and chrome. | | | | | |
| Gloss Detailer | 93600062<br><br>(U.S. Market)<br><br>93600073<br><br>(Non-U.S. Market) | Produces high gloss with UV protection. Allows chrome to breathe, unlike wax. Good for windshields. Also available as individual wipes (93600066). | Yes | Yes | Yes | No | |
| Spray Cleaner & Polish | 93600029<br><br>(U.S. Market)<br><br>93600084<br><br>(Non-U.S. Market) | Aerosol quick cleaner and detailer. Reduces static attraction to dust. Works great for removing bugs. | Yes | Yes | Yes | No | |
| Wheel & Tire Cleaner | 93600024<br><br>(U.S. Market)<br><br>93600076<br><br>(Non-U.S. Market) | Cleans wheels, tires, whitewalls and black-coated exhaust pipes and mufflers. Do not use on frames or anodized parts. | No | No | Yes | No | |
| Chrome Clean & Shine | 93600031<br><br>(U.S. Market)<br><br>93600082<br><br>(Non-U.S. Market) | Shines chrome-plated surfaces and cleans brushed aluminum or stainless steel surfaces. | As applicable | | | | |
| Bare Metal Polish | 93600028<br><br>(U.S. Market)<br><br>93600083<br><br>(Non-U.S. Market) | Polishes non-clear coated polished aluminum or polished stainless steel surfaces. | As applicable | | | | |
| Scratch & Swirl Repair | 93600025<br><br>(U.S. Market)<br><br>93600074<br><br>(Non-U.S. | Removes fine scratches and swirls. | Yes | Yes | No | No | |

| | | | | | | | |
|---|---|---|---|---|---|---|---|
| | Market) | | | | | | |
| Denim Paint Cleaner | 93600064 (U.S. Market) 93600078 (Non-U.S. Market) | Waterless quick cleaner and detailer. | Yes | Yes | Yes | Yes | |
| Windshield Cleaner Individual Wipes | 97406-10 | Quick windshield cleaner in convenient single use wipe. | Yes | Yes | No | No | Windshield |
| H-D Black Tire Sidewall Protectant | 94628-05 | Restores luster to black tire sidewalls. | No | No | No | No | Tires |
| Harley Preserve Bare Aluminum Corrosion Protectant | 99845-07 | Corrosion control for bare aluminum surfaces. Also available as individual wipes (93600063). | As applicable | | | | |
| Windshield Water Repellent | 93600032 (Global) | Allows water to bead and dissipate from the windshield. | No | No | No | No | Windshield |
| Leather Protectant | 93600034 (U.S. Market) 93600080 (Non-U.S. Market) | Weatherproofs and preserves leather products. | No | No | No | No | Leather goods |
| Black Leather Rejuvenator | 93600033 (U.S. Market) 93600081 (Non-U.S. Market) | Rejuvenates black leather products so they look brand new. | No | No | No | No | Black leather goods |
| Engine Brightener | 93600002 (U.S. Market) 93600068 (Non-U.S. Market) | Rejuvenates wrinkle black engine finish. | No | No | No | No | Wrinkle black engines |
| Boot Mark Remover | 93600001 (U.S. Market) | Removes boot marks from chrome exhaust | No | No | No | No | Exhaust system |

| | | | | | | | |
|---|---|---|---|---|---|---|---|
| | 93600069<br><br>(Non-U.S. Market) | components. | | | | | |
| Travel Care Kit | 93600007 | Travel size cleaning and care products. | Yes | Yes | Yes | Yes | |
| Seat, Saddlebag & Trim Cleaner | 93600010<br><br>(U.S. Market)<br><br>93600070<br><br>(Non-U.S. Market) | Cleans and conditions vinyl, leather and plastic. Use on seats, saddlebags, inner fairings, and any other trim. | No | No | No | No | Seats, saddlebags and trim |
| NOVUS 1 Cleaner/Protectant | 99837-94T | Cleans windshields, tail lamps and all plastics. Resists fingerprints, fogging, smears and repels dust. | No | No | No | No | Windshield |
| NOVUS 2 Scratch Remover | 99836-94T | Minor scratch remover for windshields and plastics. Apply after NOVUS 1. | No | No | No | No | Windshield |

**Recommended Surface Care Products**

| PRODUCT | PART NO. | DESCRIPTION |
|---|---|---|
| Wash Mitt | 94760-99 | Absorbent wool-blended washing mitten. |
| Soft Detailing Pad | 94790-01 | Soft pad for removing bugs and debris without scratching the surface finish. |
| Softstrips | 94680-99 | For cylindrical surfaces such as handlebars, forks, pushrod covers and spokes. |
| Softcloth | 94656-98 | Non-absorbent cloth for applying and buffing Swirl & Scratch treatment and Harley Glaze to painted surfaces or chrome. |
| Soft Drying Towel | 94791-01 | Extra-absorbent, non-streaking synthetic towel for drying. Dampen towel and wring out before using for greatest absorbency. |
| Harley-Davidson Hog Blaster Motorcycle Dryer | 94651-09 | Blows a stream of warm dry filtered air. Reduces streaks and water spots. |
| Wheel & Spoke Brush | 43078-99 | Cone-shaped scrub brush for wheels. |
| Microfiber Detailing Cloth | 94663-02 | Highly absorbent detailing cloth for polishing and sealing. Contains no nylon fibers. |
| Detailing Swabs | 93600107 | Large cotton swabs for cleaning crevices and detailed surfaces. |
| Cleaning Brush Kit | 94844-10 | Brush kit for detailing your motorcycle. |
| H-D Bike Wash Bucket and Apron | 94811-10 | Wash bucket with apron to hold your supplies. Includes grit guard. |

### Washing the Motorcycle

Use only recommended cleaning and care products. Refer to Recommended Cleaning and Care Products and Recommended Surface Care Products.

*NOTE:*

*During rinsing and washing, avoid direct spray on radio, speakers, saddlebags, trunk or Tour-Pak sealing areas (if equipped). Avoid spraying water under leather saddlebag covers (if equipped).*

## Preparation

1. Allow motorcycle to cool before rinsing or washing. Spraying water on hot surfaces can leave water spots and mineral deposits.
2. Rinse the motorcycle from the bottom up.
3. To loosen dried bugs or hardened dirt, allow surfaces to soak under a damp towel.

## Cleaning the Wheels and Tires

1. Rinse wheel and tire surfaces. Avoid splashing brake dust on chrome or painted parts.
2. Apply WHEEL & TIRE CLEANER. Allow cleaner to set for one minute.
3. Clean the wheel with a SOFT DETAILING PAD or WHEEL & SPOKE BRUSH. Use SOFTSTRIPS to clean wheel spokes. Thoroughly scrub all brake dust and other sediments off the wheel. Accumulated brake dust can trap moisture and dirt, which leads to wheel corrosion.
4. Rinse well.

## Washing the Motorcycle

*NOTE:*

*Refer to the appropriate instructions in this section for cleaning leather, Denim (flat) finishes, windshields or other special surfaces.*

1. Fill a bucket with clean water.
2. Fill an H-D WASH BUCKET with water and add SUNWASH BIKE SOAP, following the directions on the package.
3. Soak the H-D WASH MITT in the SUNWASH solution. Wash all surfaces from the top working down.
4. Spray BUG REMOVER to remove any bugs.
5. Rinse the motorcycle:
    a. Rinse from the bottom up.
    b. Rinse from the top down.

## Drying the Motorcycle

1. Dry the surfaces from the top down using a SOFT DRYING TOWEL or a HARLEY-DAVIDSON HOG BLASTER MOTORCYCLE DRYER. Avoid using any type of forced air on

speakers or other sensitive components.

2. Dampen towel in clean water and wring out the excess. The towel is more absorbent when wet.
3. Wipe across the vehicle surface.
4. Repeat as necessary until surface is completely dry.

## Polishing and Sealing

*NOTE:*

*If motorcycle has Denim finish, skip the Polishing and Sealing procedure.*

1. Apply GLAZE POLY SEALANT with a SOFTCLOTH or MICROFIBER DETAILING CLOTH, following the instructions on the package.
2. Buff with a SOFTCLOTH.
3. Polish and seal the wheels as described in Wheel Care to prevent corrosion.

*NOTE:*

*Bare aluminum wheels do not have a protective coating. The wheels corrode if not properly treated. Apply HARLEY PRESERVE BARE ALUMINUM CORROSION PROTECTANT when purchasing the motorcycle and at least twice per year to prevent cosmetic damage to bare aluminum wheels.*

## Finishing Tires

Apply H-D BLACK TIRE SIDEWALL PROTECTANT to tires, following the instructions on the package.

### Denim Finish Care

Some motorcycles have a Denim (flat or matte) finish. The Denim finish has qualities which differ from high gloss finishes on all other Harley-Davidson motorcycles. Like denim fabric, Denim paint will burnish or mar with age and use, thus adding character and personality to the finish of the motorcycle. Refer to Recommended Cleaning and Care Products for recommended products.

- If scratched, the color coat of paint does nick/scuff and these marks cannot be rubbed out.
- If polished, the finish will become less matte and more glossy over time.

## How to Clean

**For light deposits:** Use DENIM PAINT CLEANER and a SOFTCLOTH. This helps remove finger prints and light soil.

**For heavier deposits:** Use either SUNWASH BIKE SOAP and a clean H-D WASH MITT or QUICK WASH. Rinse thoroughly with clean water.

### Leather and Vinyl Care

**CAUTION**

**Do not use bleach or detergents containing bleach on saddlebags, seats, tank panels or painted surfaces. Doing so can result in equipment damage. (00229a)**

- Do not use ordinary soap to clean leather or fur. It could dry or remove the oils from the leather.

Leather, vinyl and other synthetic surfaces must be periodically cleaned and treated to maintain its appearance and extend its life. Clean and treat these surfaces once a season or more frequently under adverse conditions.

These surfaces are not designed for long-term exposure to inclement weather and should be protected with a Harley-Davidson Seat Rain Cover or Motorcycle Storage Cover (sold separately).

1. Vacuum or blow dust off surface.
2. Thoroughly clean surfaces with SEAT, SADDLEBAG & TRIM CLEANER, following directions on the bottle.
3. Allow the material to dry naturally and completely at room temperature before applying other products to the material. Do not use artificial means to dry the material quickly.
4. For leather only, rejuvenate faded black surfaces with BLACK LEATHER REJUVENATOR, and apply LEATHER PROTECTANT to weatherproof and preserve the leather.

*NOTE:*

*Many Harley-Davidson accessories and seats are made of either treated or untreated leather or have leather inserts. Natural materials age differently and require different care than man-made materials. Seat covers and panels made of leather will gain "character", such as wrinkles, with age. Leather is porous and organic and each leather product will settle into its own distinct form with use. Your leather product will mature into its own custom shape and style from the sun, rain and time. This maturing is natural and will enhance the custom quality of your Harley-Davidson motorcycle.*

## Wheel Care

Wheels can corrode or be cosmetically damaged if they are not properly cleaned, polished and preserved. Cleaning and sealing wheels with the proper treatment will guard against pitting, corrosion, spots and stains. Harley-Davidson recommends that wheels be cared for weekly. Corrosion to wheels is not considered to be a defect in materials or workmanship.

*NOTE:*

*Bare aluminum wheels do not have a protective coating and will corrode if not properly treated. Apply HARLEY PRESERVE BARE ALUMINUM CORROSION PROTECTANT when purchasing the motorcycle and at least twice per year to prevent cosmetic damage to bare aluminum wheels.*

Keep wheels clean from harsh chemicals, acid based wheel cleaners, salt, and accumulated brake dust. After washing wheels with WHEEL & TIRE CLEANER, use the polish and sealing products in Wheel Polish and Sealing Products according to the type of wheels on your motorcycle.

**Wheel Polish and Sealing Products**

| WHEELS | PRODUCT | DESCRIPTION |
|---|---|---|
| Bare aluminum | HARLEY PRESERVE™ BARE ALUMINUM CORROSION PROTECTANT | Creates a protective coating for bare aluminum wheels to prevent oxidation. |
| Polished aluminum or stainless steel | BARE METAL POLISH | Microabrasive polish to refurbish polished wheels. Do not use on chrome. |
| | GLOSS DETAILER | Seals and protects against harsh chemicals, salt, and other sediments to prevent oxidation. |
| Anodized | GLAZE POLY SEALANT | Cleans surface, removes fine scratches, and provides a breathable sealant against acid, chemicals, salt, and brake dust. |
| Chrome | CHROME CLEAN & SHINE | Non-abrasive cleaner to brighten chrome wheels. |
| | GLOSS DETAILER | Seals and protects against harsh chemicals, salt, |

| | | |
|---|---|---|
| | | and other sediments to prevent oxidation. |

### Windshield Care

**CAUTION**

**Polycarbonate windscreens/windshields require proper attention and care to maintain. Failure to maintain polycarbonate properly can result in damage to the windscreen/windshield. (00483d)**

**CAUTION**

**Use only Harley-Davidson recommended products on Harley-Davidson windshields. Do not use harsh chemicals or rain sheeting products, which can cause windshield surface damage, such as dulling or hazing. (00231c)**

- Powdered, abrasive or alkaline cleanser will damage the windscreen/windshield. Ammonia-based window cleaners cause permanent yellow effects to windshields.
- Do not use gas station windshield cleaner as finish may be damaged.
- Do not use a brush or squeegee as finish may be damaged.
- Do not clean in hot sun or high temperature.

Windshields require special care. Harley-Davidson recommends using WINDSHIELD CLEANER to clean your windshield. Refer to Recommended Cleaning and Care Products for recommended cleaning products.

*NOTES:*

- *Use NOVUS 2 SCRATCH REMOVER to remove minor scratches.*
- *To treat the windshield with water repellent use WINDSHIELD WATER REPELLENT.*
- *Covering the windshield with a clean, wet cloth for approximately 15-20 minutes before washing will make dried bug removal easier.*

1. Use mild soap and warm water to wash the windshield.
2. Wipe dry with a clean SOFT DRYING TOWEL.

*NOTE:*

*To minimize swirl marks, cleaning should be done when motorcycle is cool and parked in the shade. Faint swirl marks are normal and may be more visible on tinted windshields.*

## Troubleshooting

### Troubleshooting: General

**⚠WARNING**

**The troubleshooting section of the Owner's Manual is a guide to diagnose problems. Read the service manual before performing any work. Improper repair and/or maintenance could result in death or serious injury. (00080a)**

The following checklist of possible operating troubles and their probable causes will be helpful in keeping your motorcycle in good operating condition. More than one of these conditions may be causing trouble and should be carefully checked.

## Starter Does Not Operate or Does Not Turn Engine Over

1. Engine OFF/RUN switch in OFF position.
2. Ignition switch not ON.
3. Discharged battery or loose or corroded connections (solenoid chatters).
4. Clutch lever not squeezed against handlebar or transmission not in neutral.
5. Jiffy stand not in retracted position (for models equipped with jiffy stand interlock).
6. Blown fuse.

## Engine Turns Over But Does Not Start

1. Fuel tank empty.
2. Fuel filter clogged.
3. Discharged battery or loose or damaged battery terminal connections.
4. Fouled spark plugs.
5. Spark plug cable connections loose or in bad condition and shorting.
6. Loose or corroded wire or cable connection(s) at coil or battery.
7. Fuel pump inoperative.
8. Blown fuse.

## Starts Hard

1. Spark plugs in bad condition, have improper gap, or are partially fouled.
2. Spark plug cables in bad condition and leaking.
3. Battery nearly discharged.
4. Loose wire or cable connection(s) at one of the battery terminals or at coil.
5. Engine oil too heavy (winter operation).
6. Fuel tank vent plugged or fuel line closed off, restricting fuel flow.
7. Water or dirt in fuel system or filter.
8. Fuel pump inoperative.

## Starts But Runs Irregularly or Misses

1. Spark plugs in bad condition or partially fouled.
2. Spark plug cables in bad condition and leaking.
3. Spark plug gap too close or too wide.
4. Battery nearly discharged.

5. Damaged wire or loose connection at battery terminals or coils.
6. Intermittent short circuit due to damaged wire insulation.
7. Water or dirt in fuel system or filter.
8. Fuel vent system plugged. See dealer.
9. One or more injectors fouled.

## A Spark Plug Fouls Repeatedly

1. Fuel mixture too rich.
2. Incorrect spark plug.

## Pre-ignition or Detonation (Knocks or Pings)

1. Incorrect fuel.
2. Incorrect spark plug for kind of service.

## Overheats

1. Insufficient oil supply or oil not circulating.
2. Heavy carbon deposit from lugging engine. See dealer.
3. Insufficient air flow over cylinder heads during extended periods of idling or parade duty.

## Excessive Vibration

1. Rear fork pivot shaft nuts loose. See dealer.
2. Front engine mounting bolts loose. See dealer.
3. Front chain or links tight as a result of insufficient lubrication or belt badly worn.
4. Engine to transmission mounting bolts loose (applicable models). See dealer.
5. Damaged frame. See dealer.
6. Wheels and/or tires damaged. See dealer.
7. Vehicle not properly aligned. See dealer.

## Engine Oil Not Circulating (Oil Pressure Lamp Lit)

1. Insufficient or diluted oil supply.
2. Oil feed clogged with ice and sludge in freezing weather.
3. Grounded oil signal switch wire or faulty signal switch. See dealer.
4. Damaged or improperly installed check valve. See dealer.
5. Oil pump problem. See dealer.

### Electrical System

## Alternator Does Not Charge

1. Regulator not grounded. See dealer.
2. Engine ground wire loose or damaged. See dealer.
3. Loose or damaged wires in charging circuit. See dealer.

## Alternator Charge Rate is Below Normal

1. Weak battery.
2. Excessive use of add-on accessories.
3. Loose or corroded connections.
4. Extensive periods of idling or low speed riding.

### Transmission

## Transmission Shifts Hard

1. Bent shifter rod. See dealer.

## Transmission Jumps Out of Gear

1. Worn shifter dogs in transmission. See dealer.

## Clutch Slips

1. Clutch controls improperly adjusted. See dealer.
2. Worn friction discs. See dealer.
3. Insufficient clutch spring tension. See dealer.

## Clutch Drags or Does Not Release

1. Clutch controls improperly adjusted. See dealer.
2. Primary chaincase overfilled.
3. Clutch discs warped. See dealer.

## Clutch Chatters

1. Friction discs or steel discs worn or warped. See dealer.

### Brakes

## Brakes Do Not Hold Normally

1. Master cylinder low on fluid. See dealer.
2. Brake line contains air bubbles. See dealer.

3. Master cylinder piston worn. See dealer.
4. Brake pads contaminated with grease or oil. See dealer.
5. Brake pads badly worn. See dealer.
6. Brake disc badly worn or warped. See dealer.
7. Brake fades because of heat build up. Excessive braking or brake pads dragging. See dealer.
8. Brake drags. Insufficient hand lever free play. See dealer.

# Accessories

### Genuine Motor Parts and Accessories

Stop at your Harley-Davidson dealer to pick up a copy of the Genuine Motor Parts and Accessories catalog or go to www.harley-davidson.com to view thousands of Genuine Motor Accessories that are available for Harley-Davidson motorcycles.

The website includes the following tools and resources for accessorizing and personalizing your motorcycle.

## Online Catalog

The full Genuine Motor Parts and Accessories catalog is available online in PDF format. The catalog includes hundreds of pages of Harley-Davidson accessories and maintenance products. For performance parts, check out the Screamin' Eagle Pro Racing Parts catalog.

## Shop For Your Bike

Browse through categories of accessories and options available specifically for your motorcycle. View product descriptions, pricing, fitment and online instruction sheets for many of the available products.

## Customizer

Virtually redesign your motorcycle with parts and accessories using the Customizer. This tool allows you to experiment with different accessory and color combinations and shows how your motorcycle would look with the accessories installed. You can easily create a custom list of accessories to print out for your dealer.

## Fit Shop

Learn how to customize your motorcycle to fit you personally. See how making changes to the suspension, seat, handlebars or foot controls can enhance the ergonomics and comfort of your motorcycle.

## Custom Seats

Create a custom seat using selected designs, colors and textured materials. Custom seat specifications can be easily printed out for your dealer.

### Custom Coverage

## Add Accessories To Your New Ride

Harley-Davidson is offering a limited opportunity to purchase new accessories and have them installed at an authorized Harley-Davidson dealership **and** receive the Custom Coverage extended Limited Warranty rather than the standard one year Parts and Accessories post purchase over-the-counter warranty.

- Limited warranty for eligible *street legal* Genuine Harley-Davidson Motor Parts and Genuine Harley-Davidson Motor Accessories to run concurrent with the remainder of the motorcycle's 24-month manufacturer's warranty.
- Visit an authorized Harley-Davidson dealership within 60 days to qualify for Custom Coverage.
- Parts and accessories must be purchased and installed at an authorized Harley-Davidson dealership to qualify for Custom Coverage.
- Visit any authorized Harley-Davidson dealership as often as you like during the 60 days after purchase to select, purchase and install accessories.

Ride, personalize, customize. Take advantage of this Custom Coverage extended Limited Warranty offer today to make your bike your Custom ride.

*NOTE:*

*Customers have 60 days after the motorcycle purchase date to participate in Custom Coverage extended Limited Warranty offer. Parts and Accessories must be purchased and installed at an authorized Harley-Davidson dealership. Parts and Accessories purchased via the internet are not eligible. To locate the authorized Harley-Davidson dealership nearest you, visit the Dealer Locator on www.harley-davidson.com.*

# Warranties and Responsibilities

## Warranty and Maintenance

This Owner's Manual contains your new motorcycle limited warranty and your owner's maintenance record.

It is your responsibility as the owner to follow the maintenance schedule at the mileage intervals as specified in the Owner's Manual. All of the specified maintenance services must be performed to keep your limited warranty valid.

Some countries, states or other locations may require all regular maintenance and service work to be done by an authorized Harley-Davidson dealer for your limited warranty to remain in effect. Check with your authorized Harley-Davidson dealer for local requirements.

1. Make an appointment with a Harley-Davidson dealer for inspection and service prior to the first 1000 mi 1600 km , and as soon as possible after any problem arises.

2. Bring this Owner's Manual with you when you visit your authorized Harley-Davidson dealer to have your motorcycle inspected and serviced.

3. Have the dealer technician sign the maintenance record in the Owner's Manual at the proper mileage interval. These records should be retained by the owner as proof of proper maintenance.

4. Keep receipts covering any parts, service or maintenance performed.

These records should be transferred to each subsequent owner.

Use only Harley-Davidson approved parts and accessories that have been designed, tested and approved for your model and model year motorcycle.

Use of certain manufacturers' aftermarket performance parts may void all or parts of your limited warranty. See an authorized Harley-Davidson dealer for details.

Harley-Davidson authorized dealerships are independently owned and operated and may sell

parts and accessories that are not manufactured or approved by Harley-Davidson for use on your motorcycle. Therefore, you should understand that Harley-Davidson is not and cannot be responsible for the quality, suitability, or safety of any non-Harley-Davidson part, accessory or design modification, including labor, which may be sold and/or installed by authorized Harley-Davidson dealerships.

### Keeping It All Harley-Davidson

Genuine Harley-Davidson parts are engineered and tested specifically for use on your motorcycle. Insist that your authorized Harley-Davidson dealer uses only genuine Harley-Davidson replacement parts and accessories to keep your Harley-Davidson motorcycle and its limited warranty intact.

*NOTE:*

*Installing off-road or competition parts to enhance performance may void all or part of your new motorcycle limited warranty. See the Harley-Davidson Motorcycle Limited Warranty in this manual or an authorized Harley-Davidson dealer for details.*

**CAUTION**

**It is possible to overload your vehicle's charging system by adding too many electrical accessories. If the combined electrical accessories operating at any one time consume more electrical current than the vehicle's charging system can produce, the electrical consumption can discharge the battery and cause damage to the vehicle's electrical system. See an authorized Harley-Davidson dealer for advice about the amount of current consumed by additional electrical accessories or for necessary wiring changes. (00211c)**

### EPA Noise Regulations in the United States

EPA noise regulations require that the following statements be included in the Owner's Manual.

## EPA Regulations

TAMPERING WITH NOISE CONTROL SYSTEM PROHIBITED: Federal law prohibits the following acts or the causing thereof: (1) The removal or rendering inoperative by any person other than for purposes of maintenance, repair, or replacement of any device or element of design incorporated into any new vehicle for the purpose of noise control prior to its sale or delivery to the ultimate purchaser or while it is in use, or (2) the use of the vehicle after such device or element of design has been removed or rendered inoperative by any person.

AMONG THOSE ACTS PRESUMED TO CONSTITUTE TAMPERING ARE THE FOLLOWING:

1. Replacing the muffler(s) and/or the entire exhaust system with parts not certified to be noise legal for street use.
2. Removing or modifying the muffler internal baffles in any way.
3. Replacing the air intake/cleaner assembly with one not certified to be noise legal for street use.
4. Modifying the air intake/cleaner assembly in such a way as to make the vehicle no longer noise legal for street use.

Harley-Davidson recommends that any and all noise related maintenance be done by an authorized Harley-Davidson dealer using genuine Harley-Davidson parts.

### California and Select International Markets Evaporative Emission Controls:

### 2013 Models

All new 2013 Harley-Davidson motorcycles sold in the State of California and select international markets are equipped with an evaporative emission control system. This system is designed to meet CARB and local regulations in effect at the time of manufacture.

The system requires a small amount of maintenance. Periodic inspection is required to make sure hoses are properly routed, not kinked or blocked and that all fittings are secure. Mounting hardware should also be checked periodically for tightness.

### Warranty/Service Information

Any authorized Harley-Davidson dealer is responsible for providing the warranty repair work on your motorcycle. The fact that a dealership performs warranty repairs does not create an agency relationship between Harley-Davidson Motor Company and the authorized dealership. If you have any questions regarding warranty obligations contact your authorized Harley-Davidson dealer.

For normal service work or warranty work under the above conditions, you may obtain the name and location of your nearest U.S. authorized Harley-Davidson dealer by calling 800-258-2464 (U.S. only). To find dealers worldwide, see www.harley-davidson.com.

### Reporting Safety Defects in United States

Safety defects must be reported to the National Highway Traffic Safety Administration (NHTSA) and Harley-Davidson.

## NHTSA Statement

If you believe that your motorcycle has a defect which could cause a crash or could cause injury or death, you should immediately inform the National Highway Traffic Safety Administration (NHTSA) in addition to notifying Harley-Davidson.

If NHTSA receives similar complaints, it may open an investigation, and if it finds that a safety defect exists in a group of motorcycles, it may order a recall and remedy campaign. However, NHTSA cannot become involved in individual problems between you, your authorized Harley-Davidson dealer, or Harley-Davidson.

Refer to NHTSA Contacts to contact NHTSA.

**NHTSA Contacts**

| ITEM | DATA |
|---|---|
| Phone | Call the Auto Safety Hot Line toll-free at 888-DASH-2DOT |
| Mail | U.S. Department of Transportation, National Highway Traffic Safety Administration, Office of Defects Investigation, NVS-210, 400 7th Street S.W., Washington, D.C. 20590 |
| Web site | www.nhtsa.dot.gov |

You can also obtain other information about motor vehicle safety from the hot line.

### Required Documentation for Imported Motorcycles

If a Harley-Davidson motorcycle is imported into the United States, additional documentation is required to be eligible for the United States Harley-Davidson's Limited Warranty. A Harley-Davidson dealer can provide a form explaining the requirements.

### Owner Contact Information

If you move from your present address, sell your motorcycle, or purchase a pre-owned Harley-Davidson motorcycle, see an authorized Harley-Davidson dealer to update your owner contact information.

This will provide Harley-Davidson with an accurate registration (as required by law in some countries), and will allow Harley-Davidson to notify you in the event of a recall or product program.

The rights and benefits conferred upon you and the obligations of Harley-Davidson as set forth herein are separate and distinct from any rights and duties set forth in a service contract you may have purchased from a dealership and/or third-party insurance company. Harley-Davidson does not authorize any entity to expand the warranty obligations in connection with your motorcycle or this limited warranty.

When updating your contact information, your authorized Harley-Davidson dealer will need your vehicle identification number (VIN), odometer mileage, and date of vehicle transfer (if applicable).

### Questions and Concerns

If you have questions or concerns regarding the performance of your motorcycle or the application of the limited warranty described here, or are not satisfied with the service you are receiving from an authorized Harley-Davidson dealership, do the following:

1. Contact the selling and/or servicing dealership and speak to the sales and/or service manager.

2. If your concern cannot be addressed to your satisfaction by the dealership, contact the Harley-Davidson Enterprise Contact Center by mailing your concern to the following address or calling the phone number below.

In the U.S., state warranty laws, often referred to as lemon laws, may provide you with certain rights not specifically mentioned here. To the extent allowed by your state, Harley-Davidson requires that you first send written notification of any defect or warranty non-conformity that you have experienced with your motorcycle to Harley-Davidson. Harley-Davidson appreciates the opportunity to investigate your concerns and restore your satisfaction in your motorcycle by making the necessary repairs consistent with the terms of the limited warranty. Harley-Davidson requests that you send your complaint to the Harley-Davidson Enterprise Contact Center.

- Harley-Davidson Motor Company
- Attention: Harley-Davidson Enterprise Contact Center
- P.O. Box 653
- Milwaukee, Wisconsin 53201
- (800) 258-2464 (U.S. only)
- (414) 343-4056

## Limited Motorcycle Warranty

### 2013 HARLEY-DAVIDSON MOTORCYCLE LIMITED WARRANTY

## 24 Months/Unlimited Miles

Harley-Davidson warrants for any new 2013 Harley-Davidson motorcycle/sidecar that an authorized Harley-Davidson dealer will repair or replace without charge any parts found under normal use to be defective in factory materials or workmanship. Such repair or replacement of parts will be Harley-Davidson's sole obligation and your sole remedy under this limited warranty.

THERE IS NO OTHER EXPRESS WARRANTY (OTHER THAN THE SEPARATE EMISSIONS AND NOISE LIMITED WARRANTIES) ON THE MOTORCYCLE/SIDECAR. Any implied warranty of merchantability or fitness for particular purpose is limited to the duration of the express

warranty, or to the duration set forth in your state's warranty statutes, whichever is shorter. The implied warranty is not transferred to subsequent purchasers/buyers.

Some states do not allow limitations on how long an implied warranty lasts, so the above limitation may not apply to you.

TO THE FULLEST EXTENT ALLOWED BY LAW, NEITHER HARLEY-DAVIDSON NOR ITS AUTHORIZED DEALERS SHALL BE LIABLE FOR LOSS OF TIME, INCONVENIENCE, LOSS OF MOTORCYCLE/SIDECAR USE, COMMERCIAL LOSS OR OTHER INCIDENTAL OR CONSEQUENTIAL DAMAGES.

Some states do not allow the exclusion or limitation of incidental or consequential damages, so the above limitation or exclusion may not apply to you.

This limited warranty gives you specific legal rights, and you may have other rights which vary from state to state.

The following terms and conditions apply to this limited warranty:

## Duration

1. The duration of this limited warranty is twenty-four months, starting from the earlier of (a) the date of initial retail purchase and delivery from an authorized Harley-Davidson dealer, or (b) the third anniversary of the last day of the model year of the motorcycle/sidecar. Your authorized Harley-Davidson dealer will submit an electronic Sales and Warranty Registration form to initiate your limited warranty.

2. Any unexpired portion of this limited express warranty will be transferred to subsequent owners, upon the resale of the motorcycle/sidecar during the limited warranty period.

## Owner's Obligations

To obtain warranty service, return your motorcycle/sidecar at your expense within the limited warranty period to an authorized dealer. The authorized Harley-Davidson dealer should be able to provide warranty service during normal business hours and as soon as possible, depending upon the workload of the authorized dealer's service department and the availability of necessary parts.

## Exclusions

This limited warranty will not apply to any motorcycle/sidecar as follows:

1. Which has not been operated or maintained as specified in the Owner's Manual.

2. Which has been abused, neglected, misused, improperly stored, used "off the highway," or used for racing or competition of any kind.

3. Which is not manufactured to comply with the laws of the market in which it is registered.

4. Which has off-road or competition parts installed to enhance performance, or has other unapproved modifications (even if these modifications include genuine Harley-Davidson parts and accessories that are not approved for use on your motorcycle). These modifications may void all or part of your new motorcycle/sidecar limited warranty. See an authorized Harley-Davidson dealer for details.

5. Acts of God, war, riot, insurrection, natural disasters, including, but not limited to, nuclear contamination, lightning, forest fires, dust storms, hail storms, ice storms, earthquakes, floods, or for other circumstances out of Harley-Davidson's control.

6. Which has been in an accident, collision, dropped or struck.

## Other Limitations

This warranty does not cover:

1. Parts and labor for normal maintenance as recommended in the Owner's Manual, or the replacement of parts due to normal wear and tear including, but not limited to, the following: tires, lubrication, oil and filter change, fuel system cleaning, battery maintenance, engine tune-up, spark plugs, brake, clutch, chain/belt adjustment and chain replacement.

2. Cosmetic concerns that arise as a result of owner abuse, lack of proper maintenance or environmental conditions (except concerns that result from defects in factory materials or workmanship, which are covered by this limited warranty for the duration of the limited warranty period).

3. Any cosmetic condition existing at the time of retail delivery that has not been documented by the authorized Harley-Davidson selling dealer prior to retail delivery.

4. Defects or damage to the motorcycle/sidecar caused by alterations outside of Harley-Davidson's factory specifications or caused by alterations or use of non-Harley-Davidson approved parts or accessories.

5. Damage caused by installation or use of non-Harley-Davidson components, even those installed by an authorized dealership, that cause a Harley-Davidson part to fail. Examples include, but are not limited to performance-enhancing powertrain components or software, exhaust systems, non-approved tires, lowering kits, handlebars, add-ons connected to the factory electrical system, etc.

## Important: Read Carefully

---

1. Authorized Harley-Davidson dealers are independently owned and operated and may sell non-Harley-Davidson products. Because of this, HARLEY-DAVIDSON IS NOT RESPONSIBLE FOR THE SAFETY, QUALITY, OR SUITABILITY OF ANY NON-HARLEY-DAVIDSON PART, ACCESSORY OR DESIGN MODIFICATION INCLUDING, BUT NOT LIMITED TO, LABOR WHICH MAY BE SOLD AND/OR INSTALLED BY AUTHORIZED HARLEY-DAVIDSON DEALERS.

2. This limited warranty is a contract between you and Harley-Davidson. It is separate and apart from any warranty you may receive or purchase from an authorized Harley-Davidson dealer. An authorized Harley-Davidson dealer is not authorized to alter, modify, or in any way change the terms and conditions of this limited warranty.

3. Any warranty work or parts replacement authorized by Harley-Davidson will not preclude Harley-Davidson from later relying on any exclusion where applicable.

4. Harley-Davidson and its dealers reserve the right to modify or service motorcycles designed and manufactured by Harley-Davidson at any time without incurring any additional obligation to make the same alteration or change to a motorcycle previously built and sold. Harley-Davidson reserves the right to provide post-warranty repairs, conduct repair campaigns, offer good-will or customer satisfaction repairs or extend the warranty coverage for certain motorcycles at its sole discretion. Said repairs or extensions of warranty coverage in no way obligates Harley-Davidson to provide similar accommodations to other owners of similar motorcycles. Sometimes Harley-Davidson may offer a special adjustment program to pay all or part of the cost of certain repairs beyond the terms of your limited warranty. Check with your dealer to learn whether such programs are available to you. Your state may prohibit these types of offers, in which case, they may not be available to you.

5. The fact that a part is labeled or branded Harley-Davidson does not necessarily make it appropriate or warranted for the make and model of your motorcycle. The use of parts not designed and tested for your motorcycle may have negative consequences on the performance of your motorcycle and may create conditions not covered by the limited factory warranty.

## Limited Noise Warranty

## 2013 HARLEY-DAVIDSON MOTORCYCLE NOISE CONTROL SYSTEM LIMITED WARRANTY

The following limited warranty applies to the noise control system, is in addition to the MOTORCYCLE LIMITED WARRANTY and EMISSION CONTROL SYSTEM LIMITED WARRANTY, and applies only to Harley-Davidson motorcycles sold in the U.S.

Harley-Davidson warrants to the first owner and each subsequent owner that this motorcycle is designed and built so as to conform at the time of sale with applicable regulations of the U.S. Environmental Protection Agency (as tested following F-76 Drive-By test procedure) and that it is free from defects in factory materials and workmanship which can cause this motorcycle not to meet U.S. Environmental Protection Agency Standards within one (1) year from initial retail purchase and delivery from an authorized Harley-Davidson dealer or one (1) year from the [second] anniversary of the last day of the model year of the motorcycle, or 3,730 miles 6,000 kilometers whichever occurs first. Any unexpired portion of this limited warranty will be transferred to subsequent owners, upon the resale of the motorcycle during the limited warranty period. If the motorcycle was used as a demonstrator or company motorcycle, then the limited warranty period may have started and/or expired prior to the initial retail sale. See an authorized Harley-Davidson dealer for details.

THERE IS NO OTHER EXPRESS WARRANTY (OTHER THAN THE SEPARATE MOTORCYCLE AND EMISSIONS LIMITED WARRANTIES) ON THE MOTORCYCLE. ANY IMPLIED WARRANTY OF MERCHANTABILITY OR FITNESS FOR PARTICULAR PURPOSE IS LIMITED TO THE DURATION OF THIS LIMITED WARRANTY.

Some states do not allow limitations on how long an implied warranty lasts, so the above limitation may not apply to you.

The limited one year warranty period shall begin on the date the motorcycle is delivered to the first retail purchaser or, if the motorcycle is placed in service as a demonstrator or company motorcycle prior to sale at retail, on the date it is first placed in service.

THE FOLLOWING ITEMS ARE NOT COVERED BY THE NOISE CONTROL SYSTEM LIMITED WARRANTY

1. Failures which arise as a result of misuse, alteration, or non-performance of maintenance as specified in the Owner's Manual.
2. Replacing, removing, or modifying any portion of the NOISE CONTROL SYSTEM (consisting of the exhaust system and air intake/cleaner assembly) with parts not certified to be noise legal for street use.
3. Any motorcycle on which the odometer mileage has been changed so that the mileage cannot be determined.
4. TO THE FULLEST EXTENT ALLOWED BY LAW, NEITHER HARLEY-DAVIDSON NOR ITS AUTHORIZED DEALERS SHALL BE LIABLE FOR LOSS OF TIME, INCONVENIENCE, LOSS OF MOTORCYCLE USE, COMMERCIAL LOSS OR OTHER INCIDENTAL OR CONSEQUENTIAL DAMAGES.

Some states do not allow the exclusion or limitation of incidental or consequential damages, so the above limitation or exclusion may not apply to you.

## Other Rights

This limited warranty gives you specific legal rights, and you may have other rights which vary from state to state.

## Recommendations for Required Maintenance

It is recommended that any noise system maintenance be performed by an authorized Harley-Davidson dealer using genuine Harley-Davidson replacement parts. The maintenance,

replacement or repair of the noise control system may be performed by any other qualified service outlet or individual. Non-genuine Harley-Davidson parts may be used only if such parts are certified to comply with U.S. Environmental Protection Agency Standards.

## Limited Emission Warranty

### 2013 HARLEY-DAVIDSON EMISSION CONTROL SYSTEM LIMITED WARRANTY

---

The following limited warranty applies to the emission control system, is in addition to the MOTORCYCLE LIMITED WARRANTY and NOISE CONTROL SYSTEM LIMITED WARRANTY, and applies only to Harley-Davidson motorcycles certified for sale, registered, and normally operated in the U.S. Refer to the "CALIFORNIA EMISSIONS CONTROL WARRANTY STATEMENT" for additional warranty provisions applicable to California motorcycles.

Harley-Davidson Motor Company warrants to the first owner and each subsequent owner that this vehicle is designed, built, and equipped so as to conform at the time of sale with applicable regulations under section 7521 of Title 42 of the United States Code, and that it is free from defects in materials and workmanship which would cause this motorcycle to fail to conform with applicable regulations for five (5) years from the initial retail purchase and delivery from an authorized Harley-Davidson dealer (or five (5) years from the date the motorcycle is first placed in service, if it is first placed in service as a "demonstrator" or "company" motorcycle prior to delivery), or 18,641 miles 30,000 kilometers , whichever occurs first. Any unexpired portion of this limited warranty will be transferred to subsequent owners, upon the resale of the motorcycle during the warranty period.

THERE IS NO OTHER EXPRESS WARRANTY (OTHER THAN THE SEPARATE MOTORCYCLE AND NOISE LIMITED WARRANTIES) ON THE MOTORCYCLE. ANY IMPLIED WARRANTY OF MERCHANTABILITY OR FITNESS FOR PARTICULAR PURPOSE IS LIMITED TO THE DURATION OF THIS WARRANTY.

Some states do not allow limitations on how long an implied warranty lasts, so the above limitation may not apply to you.

The limited warranty period shall begin on the date the motorcycle is delivered to the first retail purchaser or, if the motorcycle is placed in service as a demonstrator or company motorcycle prior to sale at retail, on the date it is first placed in service.

THE FOLLOWING ITEMS ARE NOT COVERED BY THE EMISSION CONTROL SYSTEM LIMITED WARRANTY

1. Failures which arise as a result of misuse, tampering, alterations, accident, acts of nature, or improper or inadequate maintenance as specified in the Owner's Manual.

2. Required maintenance services (as specified in the Owner's Manual) and the replacement of parts (such as spark plugs, fuel and oil filters, etc.) used in required maintenance.

3. Any motorcycle on which the odometer mileage has been changed so that the mileage cannot be determined.

4. TO THE FULLEST EXTENT ALLOWED BY LAW, NEITHER HARLEY-DAVIDSON NOR ITS AUTHORIZED DEALERS SHALL BE LIABLE FOR LOSS OF TIME, INCONVENIENCE, TOWING OF THE VEHICLE, LOSS OF MOTORCYCLE USE, COMMERCIAL LOSS OR OTHER INCIDENTAL OR CONSEQUENTIAL DAMAGES.

Some states do not allow the exclusion or limitation of incidental or consequential damages, so the above limitation or exclusion may not apply to you.

## Items Covered by this Emission Warranty

---

The emission control system warranty may cover the following parts if the defect is deemed to be emissions related:

- Intake manifold

- Air cleaner backplate with solenoid operated door, as applicable
- Air cleaner filter
- Cam shaft
- Spark plug
- Ignition coil
- Ignition wires
- Vapor valve
- Catalytic converter mufflers, as applicable
- Crankcase breather
- MAP sensor

**Fuel Injection:**

- Induction module (including all sensors, injectors and all their associated connectors)
- Engine temperature sensor
- Electronic control unit
- Regulator/fuel pump (for leaks and/or high and low pressure failures)
- Fuel filter
- Oxygen sensors

**Fuel Tank: (non-cosmetic failures only)**

- Leaks
- Fuel vapor separator
- Fuel cap

If used on the above: hoses, clamps, fittings, tubing, sealing gaskets and mounting hardware.

Detailed instructions for proper maintenance and use of this motorcycle, including the time and/or mileage intervals at which such maintenance is to be performed, may be found in this Owner's Manual under Regular Service Intervals.

## Other Rights

---

This limited warranty gives you specific legal rights, and you may have other rights which vary from state to state.

## Recommendations for Required Maintenance

---

It is recommended that any emission system maintenance be performed by an authorized Harley-Davidson dealer using genuine Harley-Davidson replacement parts. However the maintenance, replacement or repair of the emissions control system may be performed by any other qualified service outlet or individual. Non-genuine Harley-Davidson parts may be used only if such parts are certified to comply with U.S. Environmental Protection Agency Standards.

# California Emissions Control Warranty

### CALIFORNIA EMISSIONS CONTROL WARRANTY STATEMENT

---

## Your Warranty Rights and Obligations

---

The California Air Resources Board and Harley-Davidson Motor Company are pleased to explain the emission control system warranty on your 2013 model year motorcycle. In California, new motor vehicles must be designed, built and equipped to meet the State's stringent anti-smog standards. Harley-Davidson Motor Company must warrant the emission control system on your motorcycle for the periods of time listed below provided there has been no abuse, unapproved modification, neglect or improper maintenance of your motorcycle.

Your emission control system may include parts such as the carburetor or fuel-injection system, the ignition system, catalytic converter, and engine computer. Also included may be hoses,

connectors and other emission-related assemblies.

Where a warrantable condition exists, within the warranty period noted below, your authorized Harley-Davidson dealer will repair your motorcycle at no cost to you including diagnosis, parts and labor.

## Manufacturer's Warranty Coverage

For a period of use of five years or 18,641 miles 30,000 kilometers , whichever first occurs, beginning on the date the motorcycle is delivered to the ultimate purchaser:

If any emission related part on your motorcycle is defective, the part will be repaired or replaced by Harley-Davidson Motor Company. This is your emission control system DEFECTS WARRANTY.

## Owner's Warranty Responsibilities

As the motorcycle owner, you are responsible for the performance of the required maintenance listed in your Owner's Manual. Harley-Davidson recommends that you retain all receipts covering maintenance on your motorcycle, but Harley-Davidson cannot deny emissions warranty coverage solely for the lack of receipts or for your failure to ensure the performance of all scheduled maintenance.

You are responsible for presenting your motorcycle to an authorized Harley-Davidson dealer as soon as a problem exists. The warranty repairs should be completed in a reasonable amount of time, not to exceed 30 days.

As the motorcycle owner, you should also be aware that Harley-Davidson may deny you warranty coverage if your motorcycle or a part has failed due to abuse, neglect, improper maintenance or unapproved modifications.

If you have any questions regarding your warranty rights and responsibilities, you should contact Harley-Davidson Customer Service Department at (800) 258-2464 (U.S. only) or (414) 343-4056, or the California Air Resources Board at 9528 Telstar Ave., El Monte, California 91731.

## Additional Warranty Terms

The warranty period starts the date the motorcycle is delivered to the ultimate purchaser or, if the motorcycle is placed in service as a demonstrator or company motorcycle prior to sale at retail, the date it is first placed in service.

The emission control system of each new Harley-Davidson® motorcycle was designed, built and tested using only Genuine Harley-Davidson parts and with these parts the motorcycle is certified as being in conformity with California emission control regulations.

We recommend that you take your motorcycle to an authorized Harley-Davidson dealer for repairs under this warranty. The dealer has factory-trained mechanics and genuine Harley-Davidson parts. However, in the case of an "emergency" (as defined below), you could have repairs performed at any available service establishment or by the owner, using any replacement part. An authorized Harley-Davidson dealer not being reasonably available, or a part not being available within a reasonable time period (not to exceed 30 days from the time the motorcycle is initially presented to a Harley-Davidson dealer for repair) constitutes an emergency. Harley-Davidson will reimburse the owner for such repairs, including diagnosis, only if it is established that the repairs are covered under this emission warranty. Harley-Davidson's parts reimbursement, however, will not exceed our suggested retail price for all warranted parts replaced and our labor reimbursement will be limited to our recommended time allowances for emission system repairs at the geographically appropriate hourly labor rate.

To obtain reimbursement from Harley-Davidson for such emergency repairs, you must keep all failed parts and original receipts, so you can present them to an authorized Harley-Davidson dealer for inspection. Harley-Davidson recommends that you bring your motorcycle to an

authorized dealer for inspection to ensure that the emergency repairs were done properly.

**Remember:** Use of non-Harley-Davidson replacement parts may impair the effectiveness of the emission control system or otherwise damage your motorcycle. If other than genuine Harley-Davidson parts are used for maintenance, replacement or repair of components affecting emission control, you should obtain written assurances that such non-Harley-Davidson parts are warranted by their manufacturer to be equal in quality to Genuine Harley-Davidson parts in both performance and durability. The use of non-Harley-Davidson replacement parts does not invalidate the existing warranty, if any, on other Harley-Davidson components unless the non-Harley-Davidson parts cause damage to warranted parts or result in the creation of an emissions non-compliant motorcycle. However, HARLEY-DAVIDSON ASSUMES NO LIABILITY UNDER THIS WARRANTY WITH RESPECT TO ANY PARTS WHICH ARE NOT GENUINE HARLEY-DAVIDSON PARTS, unless Harley-Davidson parts cause damage to non-genuine Harley-Davidson parts.

## What Is Covered By This Emission Warranty

---

The emission control system warranty covers the following "warranted parts" only:

- Intake manifold
- Air cleaner backplate with solenoid operated door, as applicable
- Air cleaner filter
- Cam shaft
- Spark plug
- Ignition coil
- Ignition wires
- Charcoal canister
- Vapor valve
- Catalytic converter mufflers, as applicable
- Crankcase breather
- Purge control valves
- MAP sensor

**Fuel Injection:**

- Induction module (including all sensors, injectors and all their associated connectors)
- Engine temperature sensor
- Electronic control unit
- Regulator/fuel pump (for leaks and/or high and low pressure failures)
- Fuel filter
- Oxygen sensors

**Fuel Tank:** (non-cosmetic failures only)

- Leaks
- Fuel vapor separator
- Fuel cap

If used on the above: hoses, clamps, fittings, tubing, sealing gaskets and mounting hardware

## What Is Not Covered By This Emission Warranty

---

The emission control system warranty does not cover:

Malfunctions in any "warranted parts" caused by any of the following: abuse, misuse, unapproved modification or alteration, tampering, disconnection, or improper or inadequate maintenance. The warranty also does not cover replacement of listed parts in the event that the vehicle has been rendered emissions non-compliant in the state of California through actions noted above.

Damage resulting from accident, acts of nature or other events beyond the control of Harley-Davidson.

The repair or replacement of "warranted parts" which are scheduled for replacement prior to

18,641 mi 30,000 km , once these parts have been replaced at the first replacement interval as part of required maintenance services.

Repairs and services performed by anyone other than an authorized Harley-Davidson Dealer (except in case of emergency as defined above).

Loss of time, inconvenience, loss of use of the motorcycle, towing of the vehicle, or commercial loss and/or consequential damages.

Repairs on any motorcycle of which odometer mileage has been changed so that mileage cannot be readily determined.

## Maintenance Scheduling

### Regular Service Intervals

Refer to Regular Service Intervals: 2013 Softail Models. Regular maintenance must be performed at specified intervals to help keep your new Harley-Davidson motorcycle operating at peak performance and ke your new motorcycle limited warranty in force. Your authorized Harley-Davidson dealer knows best how to s your motorcycle with factory approved methods and equipment assuring you of thorough and competent workmanship.

Some maintenance items should be done at least once per year as specified, even if the next mileage interv not been reached. In severe riding conditions, some maintenance items may need to be performed more fre Refer to the notes in Regular Service Intervals: 2013 Softail Models.

*NOTES:*

- *The use of parts and service procedures other than Harley-Davidson approved parts and service proce may void the limited warranty. Any alterations to the emission system components, such as the intake exhaust system, may be in violation of motor vehicle laws.*
- *Some countries, such as Brazil, may require all regular maintenance to be performed by an authorized Davidson dealer for your limited warranty to remain in effect. Check with your authorized Harley-David dealer.*
- *Some countries, such as Brazil, may require additional annual (or semi-annual) regular maintenance s be performed to keep your limited warranty in effect and/or comply with vehicle regulations. Check with authorized Harley-Davidson dealer and check the motorcycle regulations in your country for local requirements.*
- *After completing the final service interval in Regular Service Intervals: 2013 Softail Models, repe service schedule starting at the 5000 mi 8000 km interval.*

**⚠WARNING**

**Perform the service and maintenance operations as indicated in the regular service interval table. Lack of regular maintenance at the recommended intervals can affect the safe operation of your motorcycle, which could result in death or serious injury. (00010a)**

**⚠WARNING**

**If you operate your motorcycle under adverse conditions (severe cold, extreme heat, very dusty environment, very bad roads, through standing water, etc.), you should perform the regular maintenance intervals more frequently to ensure the safe operation of your motorcycle. Failure to maintain your motorcycle could result in death or serious injury. (00094a)**

**Regular Service Intervals: 2013 Softail Models**

| ITEM SERVICED | PROCEDURE | 1000 MI | 5000 MI | 10000 MI | 15000 MI | 20000 MI | 25000 MI | 30000 MI | 35000 MI | 40000 MI | 45000 MI | 50000 MI | M |
|---|---|---|---|---|---|---|---|---|---|---|---|---|---|

| | | 1600 KM | 8000 KM | 16000 KM | 24000 KM | 32000 KM | 40000 KM | 48000 KM | 56000 KM | 64000 KM | 72000 KM | 80000 KM | |
|---|---|---|---|---|---|---|---|---|---|---|---|---|---|
| Engine oil and filter | Replace | X | X | X | X | X | X | X | X | X | X | X | 3 |
| Oil lines and brake system | Inspect for leaks, contact, or abrasion | X | X | X | X | X | X | X | X | X | X | X | 1 |
| Air cleaner | Inspect, service as required | | X | X | X | X | X | X | X | X | X | X | 7 |
| Tires | Check pressure, inspect tread | X | X | X | X | X | X | X | X | X | X | X | 3 |
| Wheel spokes (if equipped) | Check tightness | X | X | | | X | | | X | | | X | 1 |
| Primary chaincase lubricant | Replace | X | | X | | X | | X | | X | | X | 7 |
| Transmission lubricant | Replace | X | | | | X | | | | X | | | 7 |
| Clutch | Check adjustment | X | X | X | X | X | X | X | X | X | X | X | 1 |
| Drive belt and sprockets | Inspect, adjust belt | X | X | X | X | X | X | X | X | X | X | X | 1 |
| Throttle, brake, and clutch controls | Check, adjust and lubricate | X | X | X | X | X | X | X | X | X | X | X | 1 |
| Jiffy stand | Inspect and lubricate | X | | X | | X | | X | | X | | X | 1 |
| Fuel lines and fittings | Inspect for leaks, contact or abrasion | X | X | X | X | X | X | X | X | X | X | X | 1 |
| Fuel filter element | | Replace every 100,000 mi 160,000 km | | | | | | | | | | | 1 |
| Brake fluid | Inspect sight glass | X | X | X | X | X | X | X | X | X | X | X | 4 |
| Brake pads and discs | Inspect for wear | X | X | X | X | X | X | X | X | X | X | X | |
| Spark plugs | Replace | | | | | | | X | | | | | 6 |
| Electrical equipment and switches | Check operation | X | X | X | X | X | X | X | X | X | X | X | |
| Front forks | Rebuild | | | | | | | | | | | X | 1 |
| Steering head bearings | Adjust | X | | X | | X | | X | | X | | X | 1 |
| Steering head bearings | Lubricate | | | X | | X | | X | | X | | X | 2 |
| Windshield bushings (if equipped) | Inspect | | | X | | X | | X | | X | | X | 1 |
| Critical | Check | X | | X | | X | | X | | X | | X | 1 |

| | | | | | | | | | | | | | |
|---|---|---|---|---|---|---|---|---|---|---|---|---|---|
| fasteners | tightness | | | | | | | | | | | | |
| Battery | | Check battery and clean connections annually. | | | | | | | | | | | |
| Exhaust system | Inspect for leaks, cracks, and loose or missing fasteners or exhaust shields | X | X | X | X | X | X | X | X | X | X | X | 3 |
| Road test | Verify component and system functions | X | X | X | X | X | X | X | X | X | X | X | |

| | |
|---|---|
| **NOTES:** | 1. Should be performed by an authorized Harley-Davidson dealer, unless you have the prope service data and are mechanically qualified.<br><br>2. Disassemble, lubricate and inspect every 30,000 mi 48,000 km .<br><br>3. Perform annually or at specified intervals, whichever comes first.<br><br>4. Change DOT 4 brake fluid and flush system every two years.<br><br>5. Perform spoke tension check at the 1000 mi 1600 km , 5000 mi 8000 km , 20,000 mi 32,00 services and every 15,000 mi 24,000 km interval thereafter. Not all vehicles are equipped witl spoke wheels. Consult appropriate topic in service manual.<br><br>6. Perform every two years or at specified intervals, whichever comes first.<br><br>7. Perform maintenance more frequently in severe riding conditions (such as extreme temper dusty environments, mountainous or rough roads, long storage conditions, short runs, heavy stop/go traffic or poor fuel quality).<br><br>8. Disassemble, inspect, rebuild forks and replace fork oil every 50,000 mi 80,000 km . |

**Owner's Maintenance Records**

| SERVICE MILE INTERVAL | DATE | DEALER NUMBER | TECHNICIAN NAME | TECHNICI SIGNATU |
|---|---|---|---|---|
| 1000 mi 1600 km | | | | |
| 5000 mi 8000 km | | | | |
| 10,000 mi 16,000 km | | | | |
| 15,000 mi 24,000 km | | | | |
| 20,000 mi 32,000 km | | | | |
| 25,000 mi 40,000 km | | | | |
| 30,000 mi 48,000 km | | | | |
| 35,000 mi 56,000 km | | | | |
| 40,000 mi 64,000 km | | | | |
| 45,000 mi 72,000 km | | | | |
| 50,000 mi 80,000 km | | | | |

## Service Literature

Refer to Service Literature: 2013 Softail Models. Visit any Harley-Davidson dealer or go to www.harley-davidson.com to purchase a service or parts manual for your motorcycle. Factory authorized manuals are th complete and detailed source of information outside of your Harley-Davidson dealer.

| DOCUMENT | LANGUAGE | PART NUMBER |
|---|---|---|
| Service Manual | English | 99482-13A |
| | French | 99482-13FRA |
| | German | 99482-13DEA |
| | Spanish | 99482-13ESA |
| | Italian | 99482-13ITA |
| | Simplified Chinese | 99482-13ZH |
| | Japanese | 99482-13JAA |
| Electrical Diagnostic Manual | English | 99498-13A |
| | French | 99498-13FRA |
| | German | 99498-13DEA |
| | Spanish | 99498-13ESA |
| | Italian | 99498-13ITA |
| | Simplified Chinese | 99498-13ZH |
| | Japanese | 99498-13JAA |
| Parts Catalog | English | 99455-13A |

## H-D Michigan, Inc. Trademark Information

Bar & Shield, Cross Bones, Digital Tech, Digital Technician, Digital Technician II, Dyna, Electra Glide, Evolut
Bob, Fat Boy, Forty-Eight, Glaze, Gloss, H-D, H-Dnet.com, Harley, Harley-Davidson, HD, Heritage Softail, Ir
Low Rider, Night Rod, Nightster, Night Train, Profile, Revolution, Road Glide, Road King, Road Tech, Rocke
Screamin' Eagle, Seventy-Two, Softail, Sportster, Street Glide, Street Rod, Sun Ray, Sunwash, Super Glide,
SuperLow, Switchback, SYN3, TechLink, TechLink II, Tour-Pak, Twin Cam 88, Twin Cam 88B, Twin Cam 96
Cam 96B, Twin Cam 103, Twin Cam 103B, Twin Cam 110, Twin Cam 110B, Ultra Classic, V-Rod, VRSC an
Harley-Davidson Genuine Motor Parts and Genuine Motor Accessories are among the trademarks of H-D Mi
Inc.

## Product Registered Marks

Apple, Alcantara S.p.A., Allen, Amp Multilock, Bluetooth, Brembo, Delphi, Deutsch, Dunlop, Dynojet, Fluke, (
Versilube, Garmin, Gunk, Hydroseal, Hylomar, iPhone, iPod, Kevlar, Lexan, Loctite, Lubriplate, Keps, K&N,
Magnaflux, Marson Thread-Setter Tool Kit, MAXI fuse, Molex, Michelin, MPZ, Mulitilock, nano, NGK, Novus,
Packard, Pirelli, Permatex, Philips, PJ1, Pozidriv, Robinair, S100, Sems, Snap-on, Teflon, Threadlocker, Tor
Torco, TORX, Tufoil, Tyco, Ultratorch, Velcro, X-Acto, XM Satellite Radio, and zumo are among the tradema
their respective owners.