RR ENDURO 2016

250 / 300 2T

COD. 026.44.018.00.00

MANUALE DI OFFICINA
WORKSHOP MANUAL
MANUEL D'ATELIER
WERKSTATTHANDBUCH

Beta motorcycles

Downloaded from www.Manualslib.com manuals search engine

www.betamotor.com

TABLE OF CONTENTS

PREAMBLE 2

TECHNICAL FEATURES OF ENGINE 4

SPECIAL EQUIPMENT 5

1 REMOVAL OF MOTOR FROM VEHICLE 6

2 ENGINE DISASSEMBLY 13

2.1 CLUTCH/GEAR OIL DRAIN 13
2.2 REMOVAL OF CLUTCH CONTROL ROD AND PINION SPACER 13
2.3 REMOVAL OF PISTON, CYLINDER AND HEAD 14
2.4 REMOVAL OF IGNITION UNIT 17
2.4.1 REMOVAL OF FLYWHEEL COVER 17
2.4.2 REMOVAL OF STATOR 17
2.4.4 REMOVAL OF PICK-UP 18
2.4.3 REMOVAL OF FLYWHEEL 18
2.5 REMOVAL OF ELECTRIC IGNITION 19
2.5.1 REMOVAL OF START MOTOR 20
2.5.2 REMOVAL OF BENDIX COUPLING 20
2.6 REMOVAL OF COOLANT LIQUID PUMP, CLUTCH UNIT, MAIN GEAR, CENTRIFUGAL UNIT, GEARSHIFT ORGANS, KICKSTART 21
2.6.1 REMOVAL OF COOLANT LIQUID PUMP 24
2.6.2 REMOVAL OF CENTRIFUGAL UNIT AND LEVERAGE 25
2.6.3 REMOVAL OF MAIN GEAR AND CLUTCH UNIT 28
2.6.4 PEDAL KICKSTART 31
2.6.5 EXTERNAL GEARSHIFT UNIT 33
2.7 INTAKE SYSTEM 34
2.8 CRANKSHAFT, GEARBOX UNIT AND INTERNAL GEARSHIFT 35
2.81 OPENING OF CRANKCASE 35
2.8.2 MOTOR SHAFT 36
2.8.3 INTERNAL GEARSHIFT UNIT AND COMPLETE GEARBOX 36
2.9 DISASSEMBLY OF PARTS FROM CRANKCASES 37
2.9.1 RIGHT CRANKCASE HALF 37
2.9.2 LEFT CRANKCASE HALF 40

3 MOTOR CHECKS AND ASSEMBLY 41

3.1 CRANKCASE HALF 41
3.1.1 APPLICATION OF RIGHT CRANKCASE HALF PARTS 42
3.1.2 APPLICATION OF LEFT CRANKCASE HALF PARTS 44
3.2 CHECK OF CONNECTING ROD AND MOTOR SHAFT 45
3.3 ASSEMBLING OF COMPLETE CRANKSHAFT 46
3.4 GEAR UNIT: CHECKS AND REASSEMBLY 47
3.4.1 CHECK OF GEARBOX UNIT 47
3.4.2 ASSEMBLY OF MAIN UNIT 48
3.4.3 ASSEMBLY OF SECONDARY UNIT 49
3.4.4 CHECK OF FORKS, FORK PINS AND DESMODROMIC DEVICE 50
3.4.5 ASSEMBLY OF GEARBOX AND INNER CONTROL 52
3.5 CLOSING OF ENGINE CRANKCASE 55
3.6 EXTERNAL GEARSHIFT 56
3.6.1 CHECK OF COMPLETE DRIVE SHAFT 56
3.6.2 ASSEMBLY OF EXTERNAL GEARSHIFT 58
3.7 KICK STARTER DEVICE 58
3.7.1 CHECK OF KICKSTART SHAFT AND ASSEMBLY 58
3.7.2 ASSEMBLY OF KICKSTART DEVICE 60
3.8 MAIN GEAR AND CLUTCH UNIT 62
3.8.1 CHECK OF MAIN GEAR 62
3.8.2 APPLICATION OF MAIN GEAR 62
3.8.3 CHECK OF CLUTCH CASE, ROLLER BEARING AND INTERNAL CENTRE BEARING 63
3.8.4 CHECK OF CLUTCH DISCS 64
3.8.5 CHECK OF SPRINGS 65
3.8.6 CHECK OF CLUTCH DRUM 65
3.8.7 CHECK OF THRUST BEARING DEVICE 66
3.8.8 ASSEMBLY OF CLUTCH UNIT 66
3.9 COOLANT LIQUID PUMP AND CENTRIFUGAL UNIT 68
3.9.1 CHECK OF PUMP UNIT AND DISASSEMBLY, CENTRIFUGAL UNIT AND IDLER UNIT 69
3.9.2 ASSEMBLY OF CENTRIFUGAL UNIT 70
3.9.3 ASSEMBLY OF PUMP UNIT 73
3.9.4 ASSEMBLY OF COMPLETE CLUTCH COVER AND PUMP UNIT 73
3.10 ELECTRIC IGNITION UNIT 76
3.10.1 BENDIX COUPLING CHECKS 76
3.10.2 IGNITION UNIT COUPLING TO MOTOR 76
3.11 IGNITION SYSTEM 77
3.11.1 CHECK OF IGNITION SYSTEM 78
3.11.2 COUPLING OF IGNITION SYSTEM TO CRANKCASE 78
3.12 THERMAL UNIT 81
3.12.1 CHECKING PISTON AND ELASTIC BANDS 81
3.12.2 CYLINDER CHECK 82
3.12.3 PISTON CYLINDER COUPLING PLAY 83
3.12.4 CHECKS AND EXHAUST VALVE UNIT DISASSEMBLY 83
3.12.5 EXHAUST VALVE UNIT ASSEMBLY 85
3.12.6 PISTON, PIN BOLT, ELASTIC BANDS AND CYLINDER ASSEMBLY 87
3.12.7 CHECK OF CRANKCASE/CYLINDER GASKET THICKNESS 89
3.12.8 HEAD APPLICATION 90
3.12.9 EXHAUST VALVE ADJUSTMENT 91

Downloaded from www.Manualslib.com manuals search engine

3.13 CHECK OF INTAKE UNIT AND ASSEMBLY.....95

3.14 INSERTION OF CLUTCH ROD AND PINION SPACER.....97

4 REASSEMBLY OF MOTOR IN VEHICLE 98

TABLE OF FASTENING TORQUES OF ENGINE COMPONENTS 104

TABLE OF FRAME/MOTOR FASTENING TORQUES 106

TABLE OF SUPERSTRUCTURE FASTENING TO RQUE VALUES 106

RECOMMENDED MOTOR MAINTENANCE 107

RECOMMENDED LUBRICANTS AND LIQUIDS 107

Downloaded from www.Manualslib.com manuals search engine

PREAMBLE

This publication has been written in order to make operations for inspection, maintenance and repairs of the motorcycle engine known and understandable to the user of the motorcycle and to the technical assistance operator.

Read this entire manual with care before operating on the engine. Sufficient knowledge of the components that make up the engine and of all the procedures to be followed for inspection and maintenance contribute to lengthen the life of the engine.
The paragraphs have been enhanced with schematic illustrations highlighting each subject in order to make reading immediately understandable.

Informative note

Betamotor S.p.A. is engaged in a policy of ongoing improvement of its products. This is why it could be possible to note slight differences between the contents of this document and the vehicle upon which you are carrying out repairs and/ or maintenance. Betamotor S.p.A. models are exported to numerous countries in which there are different standards concerning Highway Codes and procedures for approval of the vehicle. Relying on your understanding, Betamotor S.p.A. therefore deems it necessary to reserve the right to modify its products and technical documentation at any time without prior warning.

We respect and defend the environment

All that we do has an impact on the whole Planet and its resources. Wishing to safeguard the interests of the entire Community, Betamotor S.p.A. would like to make customers and technical operators aware of ways of using the vehicle and of disposing of its parts in full compliance with standards in force in terms of environmental pollution, waste disposal and recycling.

SAFETY

Carbon monoxide

- *Exhaust gases contain carbon which is poisonous. Carbon monoxide can cause loss of conscience and lead to death. When starting the engine, make sure the place you are in is well-ventilated. Never start the engine in a closed place.*
- *Starting the engine in closed places can be done only if provided with relevant gas discharge evacuation devices.*

Petrol

- *Petrol is extremely flammable and can be explosive in some conditions.*
- *Keep heat sources, sparks and flames away from the work area.*
- *Always work in a well-ventilated area.*
- *Never use petrol as a solvent for cleaning. Do not handle it unless absolutely necessary.*
- *Never use petrol to clean components by means of compressed air.*
- *Keep out of the reach of children.*

Motor oil

- *Motor oil can cause skin illnesses if carried often and for prolonged periods in contact with skin.*
- *If you touch motor oil, clean parts with soap and water as soon as possible.*
- *In case of contact with the eyes, rinse them abundantly with water and seek medical advice.*
- *If swallowed, do not induce vomiting in order to avoid breathing the product into the lungs; seek immediate medical advice. If you believe the product has been breathed into the lungs, bring the concerned person urgently to the hospital.*
- *Used oil contains dangerous substances which are harmful for the environment. When changing it, you must be equipped to dispose of it in compliance with existing law.*
- *Avoid dispersing used oils in the environment.*
- *Keep out of the reach of children.*

Downloaded from www.Manualslib.com manuals search engine

Coolant liquid

- *In some situations, the ethylene glycol contained in the coolant is flammable and its flame is invisible. Should ethylene glycol catch fire, though its flame is invisible, it can cause burns.*
- *Do not bring the coolant in contact with hot parts. These parts could be hot enough to cause the liquid to ignite.*
- *The coolant (ethylene glycol) can irritate skin and is poisonous if swallowed.*
- *Should the coolant come into contact with the skin, immediately remove contaminated clothing or footwear and wash with soap and water. In case of contact with the eyes, rinse them abundantly with clean water and seek medical advice immediately. Should it be swallowed, do not induce vomiting in order to avoid breathing the product into the lungs. Administer clean water and bring the concerned person immediately to the hospital, showing this product to the hospital staff.*
- *In the event of exposure to a high concentration of vapours, bring the concerned person to an uncontaminated atmosphere and seek medical advice if necessary.*
- *Do not remove the radiator cap when the engine is still hot. When coolant is pressurised, it can spurt out violently and cause burns.*
- *Coolant contains dangerous substances which are harmful for the environment. When changing it, you must be equipped to dispose of it in compliance with existing law.*
- *Do not disperse coolant into the environment.*
- *Keep out of the reach of children.*

Hot parts

- *The engine and the exhaust system get very hot and stay at that temperature for a long time, even after the engine has been turned off. Wait for them to cool down before handling these parts or intervening on areas around them. Use insulated gloves.*

WARNINGS

The information contained in this paragraph is important so that the operations carried out on the engine can be performed without causing damage.

- *Before disassembling, clean the motorcycle thoroughly.*
- *While you are disassembling it, clean all the parts and place them in containers exactly respecting the order of disassembly.*
- *Always use special tools wherever necessary and when thus prescribed.*
- *Always use glues, sealant and lubricants wherever prescribed. Respect the indications concerning their technical features.*
- *Always replace parts such as gaskets, O-rings and safety washers with newly supplied parts.*
- *When loosening or tightening nuts or screws, always start with the larger ones or from the centre. Always respect the indicated tightening torques.*
- *Use only Betamotor original spare parts.*

Downloaded from www.Manualslib.com manuals search engine

TECHNICAL FEATURES OF ENGINE

CHARACTERISTIC DATA	ENGINE			
	RR250		RR300	
Bore[mm]/Stroke [mm]	66,4/72		72/72	
Displacement [cm³]	249		293	
Compression ratio	13,5:1		11,5:1	
	TRANSMISSION			
	RR250		RR300	
Main	28/70		28/70	
1st gear ratio	12/31		12/31	
2nd gear ratio	15/28		15/28	
3rd gear ratio	19/28		19/28	
4th gear ratio	20/24		20/24	
5th gear ratio	27/27		27/27	
6th gear ratio	28/24		28/24	
	CARBURETOR			
	RR250		RR300	
Version	Approv.	Race*	Approv.	Race*
Carburetor type	PWK 36S AG		PWK 36S AG	
Main jet	118	165	118	165
Slow jet	35	35	38	38
Ignition jet	50	85	50	85
Needle	N84K	N0ZJ	N84K	N2ZW
Needle position (from above)	3°+1/2	2°	4°	2°
Air screw turns (from all closed)	1+3/4	1+1/4	2	1+1/4
Flush	SI	NO	SI	NO

*** this modification makes the vehicle non-compliant with the highway code in force. Use must be limited to private circuits closed to circulation**

Downloaded from www.Manualslib.com manuals search engine

SPECIAL EQUIPMENT

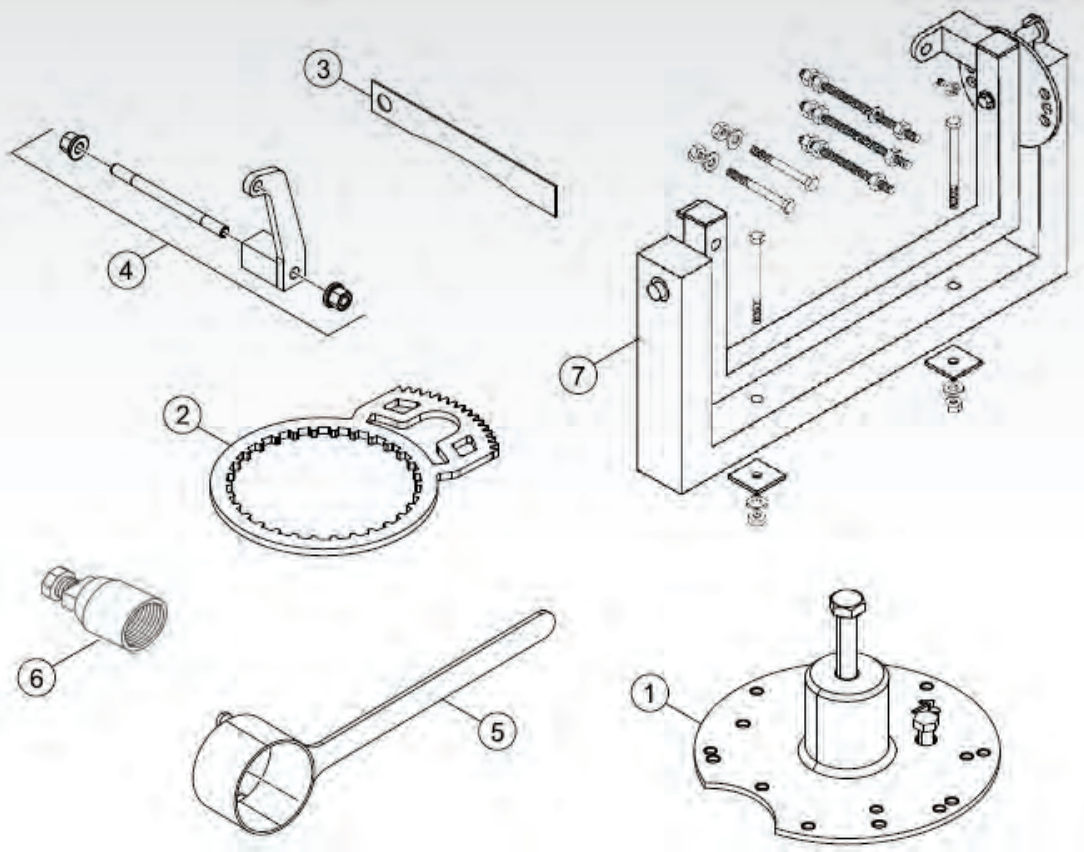

1. *Crankcase uncoupler code 0100042 000*
2. *Clutch drum nut/Main tool code 026140010 000*
3. *Crankcase/Cylinder gasket check plate code 026140020 000*
4. *Front bracket code 026140030 000 to fix engine to stand code 3625132 000*
5. *Flywheel blocking tool code 026140040 000*
6. *Flywheel extractor code 3625173 000*
7. *Engine support stand code 3625132 000*

Symbols

Value
Fastening torque

Loctite 243/
Sichel 100M

Pasta siliconica

Grease

Downloaded from www.Manualslib.com manuals search engine

1 REMOVAL OF MOTOR FROM VEHICLE

- Carefully wash the vehicle;
- Remove the engine guard plate;
- Place the vehicle onto an adequate stand.

- Disconnect the tank ventilation pipe.
- Set the fuel valve to OFF and disconnect the fuel pipe from the valve.

- Remove the seat.
- Grasp the side panel from the front and pull outwards.

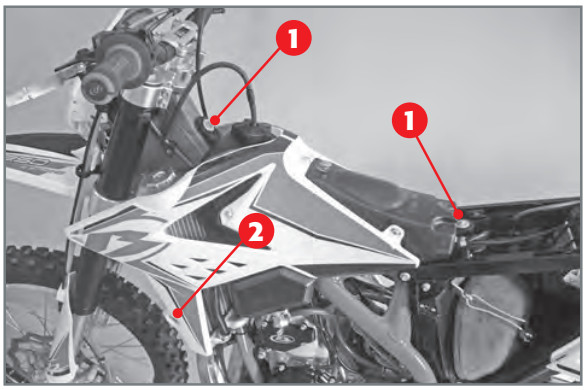

- Remove the two screws **1** fastening the tank to the frame and the screw (**2** - one per side) fastening the side panel to the radiator.

Downloaded from www.Manualslib.com manuals search engine

- Remove the tank along with the sides.

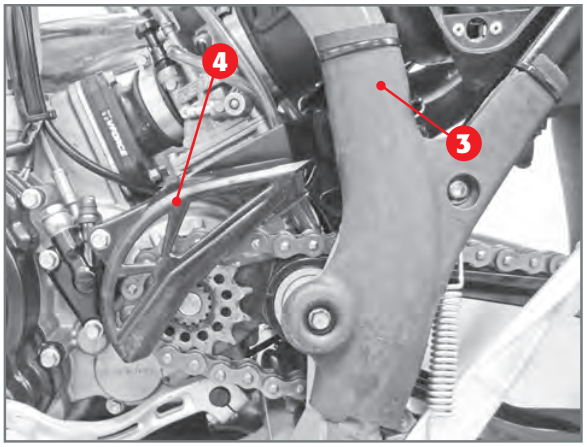

- Remove the frame guards 3 (one each side) and the pinion guard 4.

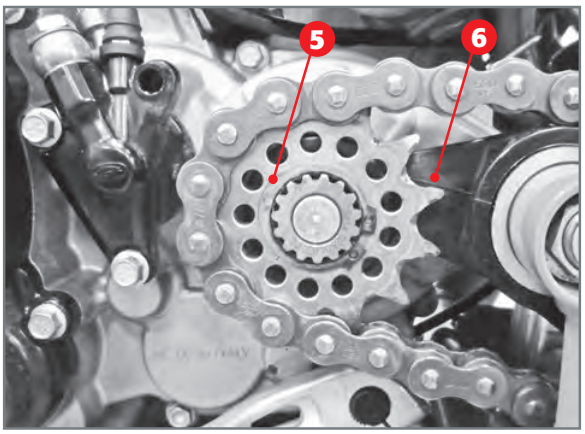

- Remove the circlip 5 and extract the pinion. Rest the chain against the upper wedge 6.

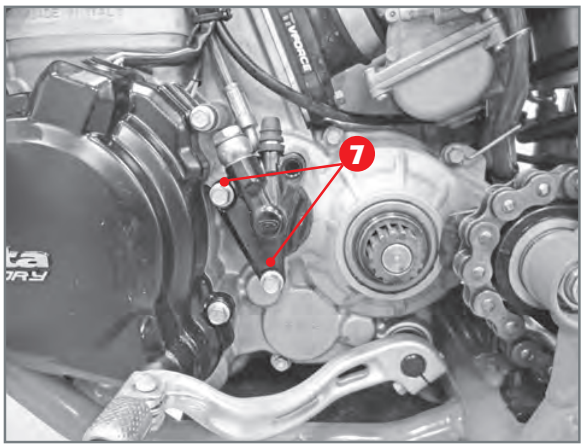

- Remove the screws 7 fixing the clutch actuator to the crankcase half.

ATTENTION!
Do not activate the clutch lever with actuator decoupled from engine.

Downloaded from www.Manualslib.com manuals search engine

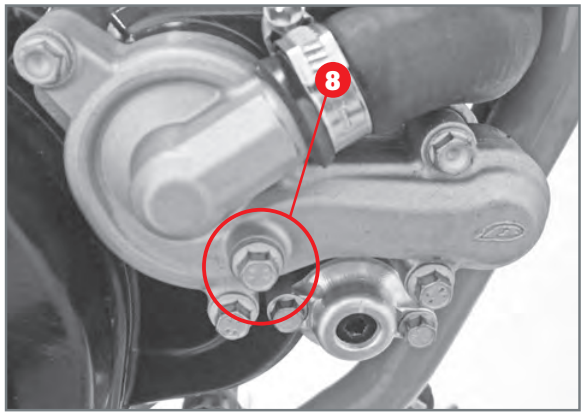

- Remove the exhaust expansion and the silencer.
- Drain the cooling system through screw **8** and let the liquid outflow into a container (the cooling circuit contains 1.3l of liquid). Remove the radiator cap.

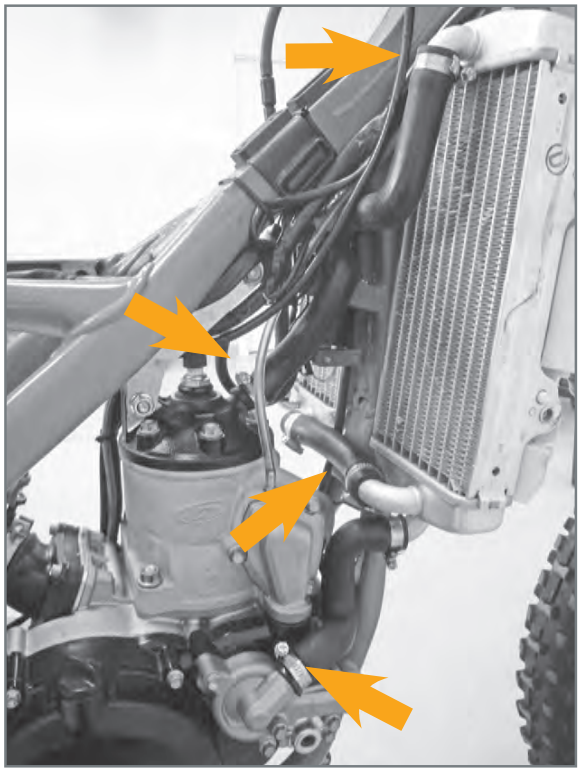

- Disconnect the water hoses from the engine and from the right radiator.
- Remove the right radiator.

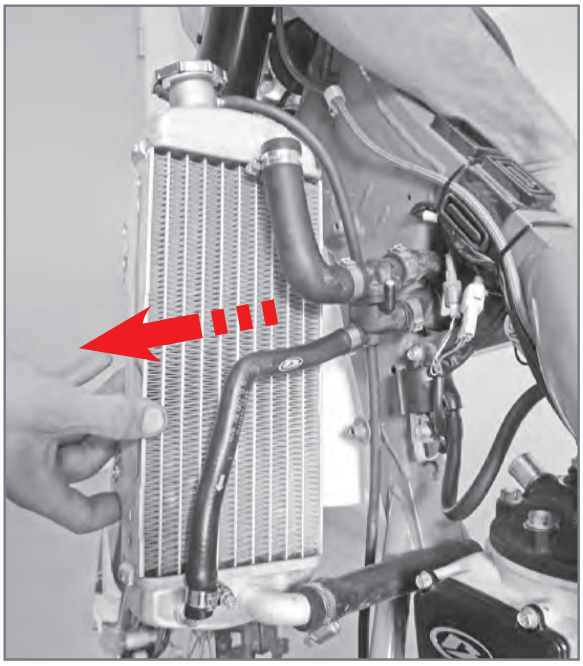

- Remove the left radiator with pipes.

Downloaded from www.Manualslib.com manuals search engine

- Disconnect the spark plug cap, the connectors from the coil and remove the coil itself. Cut all straps binding the engine's electric system to the clutch pipe and to the frame.
- Disconnect the engine ventilation pipes

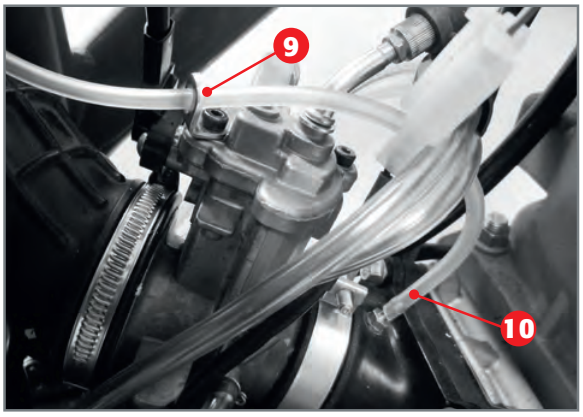

- Pull the mixer tube **9** out from the intake manifold and tube hold **10**.

ATTENTION!
When the mixer tube has been disconnected, plug it to prevent emptying.

Downloaded from www.Manualslib.com manuals search engine

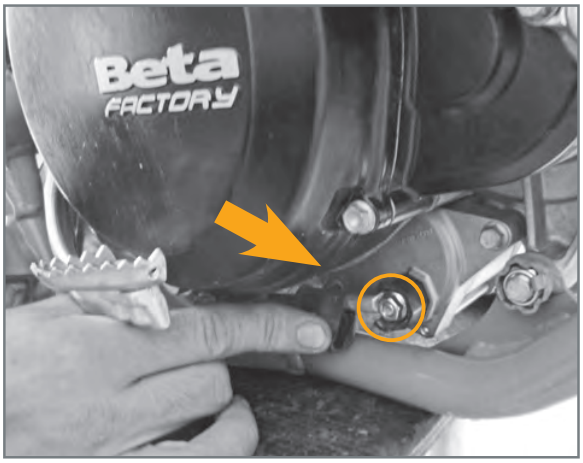

- Remove the start motor cable fixing nut.

- Remove the head connections and spark plug.

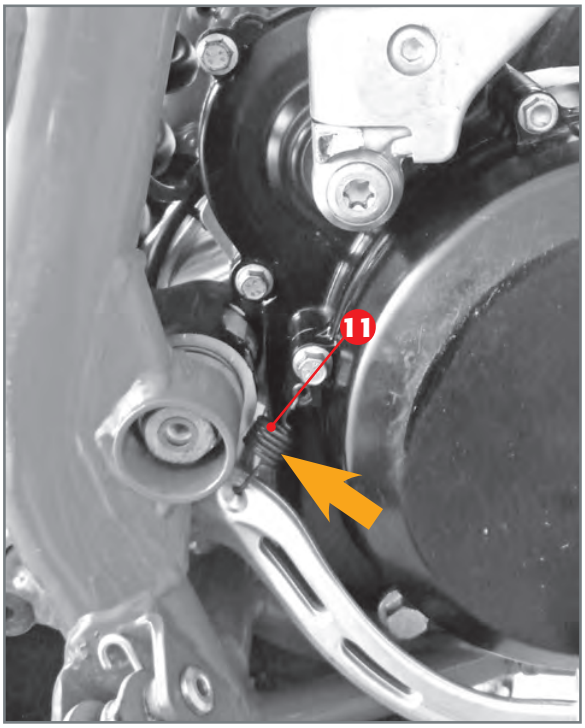

- Release and remove the brake pedal return spring **7**. Remove the kickstarter lever.
- Remove the gear lever.

Downloaded from www.Manualslib.com manuals search engine

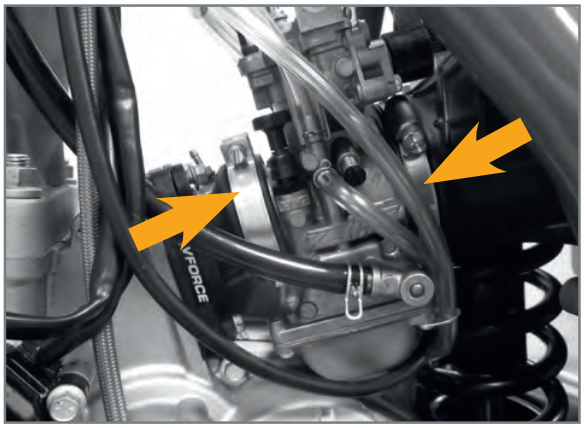

- Loosen the carburetor straps from the air filter sleeve and from the manifold.

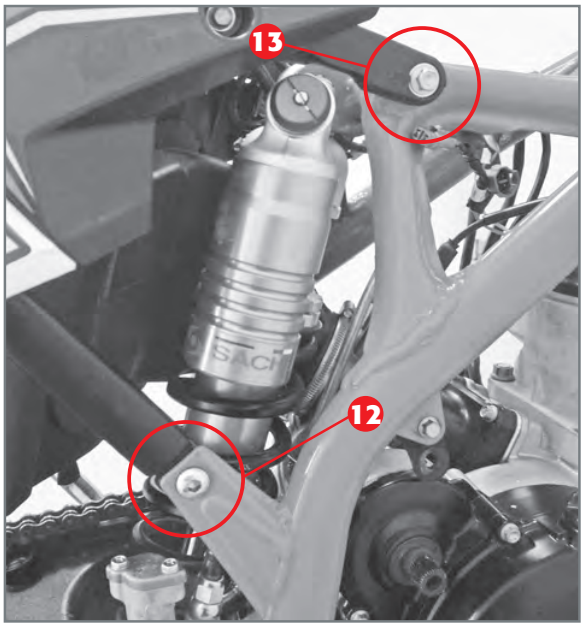

- Remove the seat rail lower fixing screws **12** (one each side) and loosen the upper screws **13** (one each side).

- Rotate the filter box unit.
- Remove the carburetor leaving it connected to the gas cable.

Downloaded from www.Manualslib.com manuals search engine

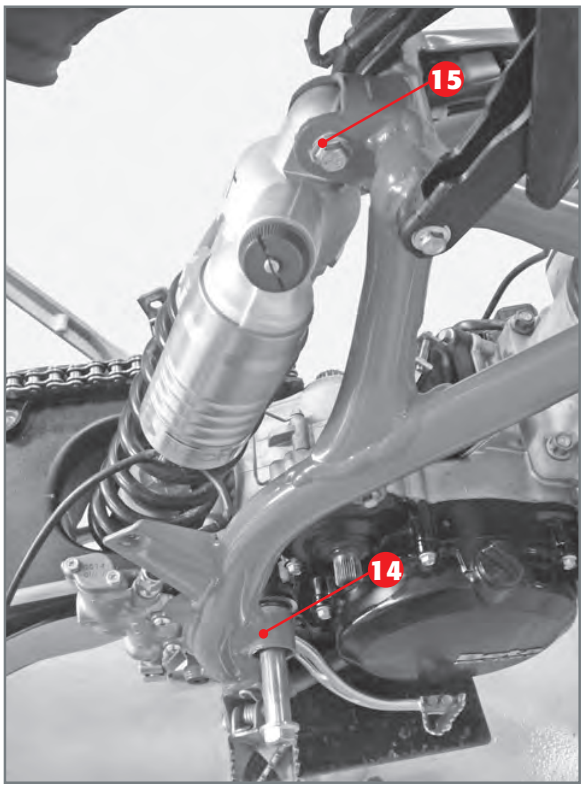

- Remove the swingarm pin **14** and the upper shock-absorber pin **15**.

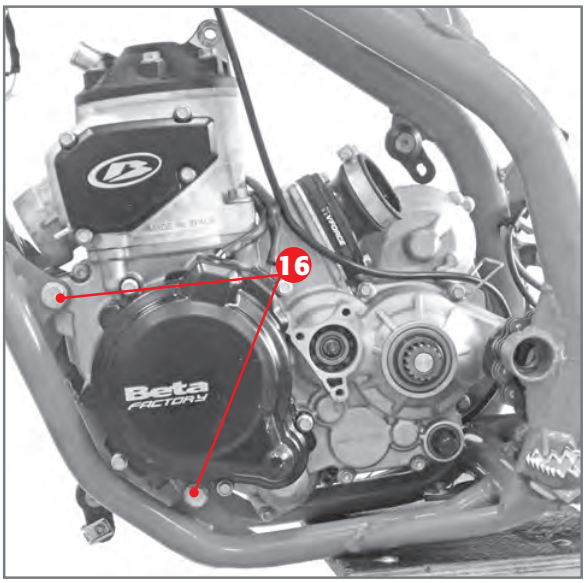

- Remove the engine pins **16.**

Extract the engine from the frame and apply it to the specific stand *code 3625132 000* using specific front fixing bracket *code 026140030 000.*

Downloaded from www.Manualslib.com manuals search engine

2 ENGINE DISASSEMBLY

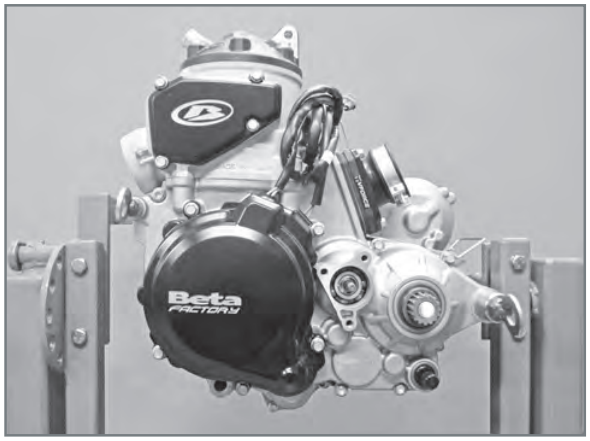

Secure the engine to the specific support stand *code 3625132000* by means of front fixing *code. 026140030 000*, in order to work in comfort and safety. Then proceed as follows

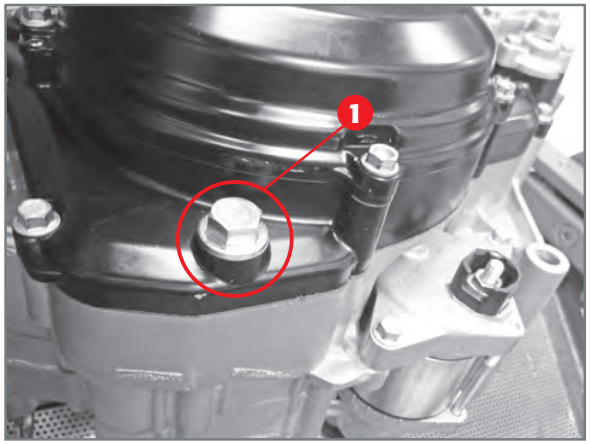

2.1 CLUTCH/GEAR OIL DRAIN

Remove screw **1** and let the oil drain.

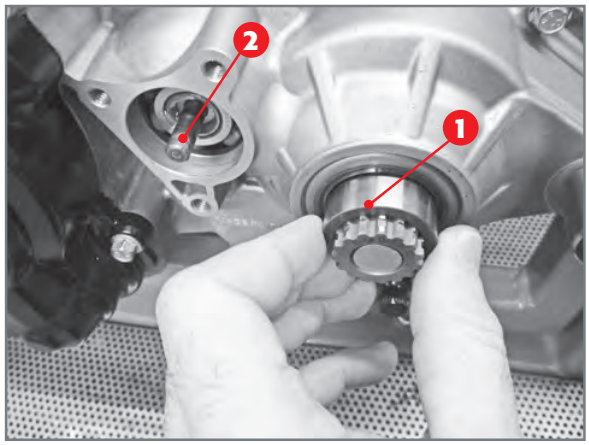

2.2 REMOVAL OF CLUTCH CONTROL ROD AND PINION SPACER

Extract the spacer **1.**
Extract the clutch control rod **2.**

Downloaded from www.Manualslib.com manuals search engine

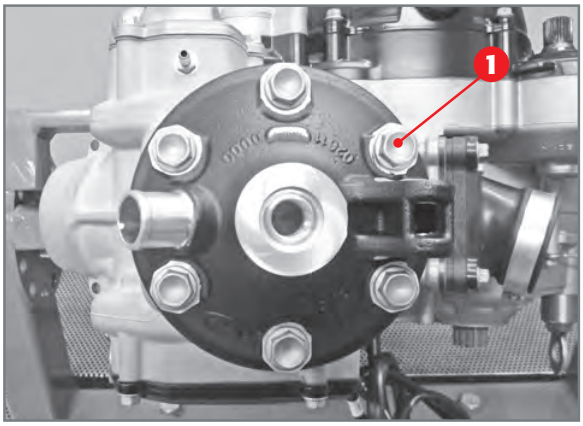

2.3 REMOVAL OF PISTON, CYLINDER AND HEAD

Remove the spigot screws **1** together with the copper washers. Remove the head and the two O-rings.

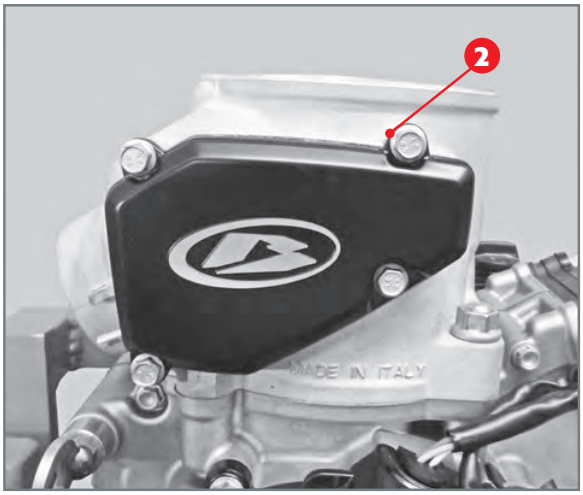

Remove the four screws **2**.

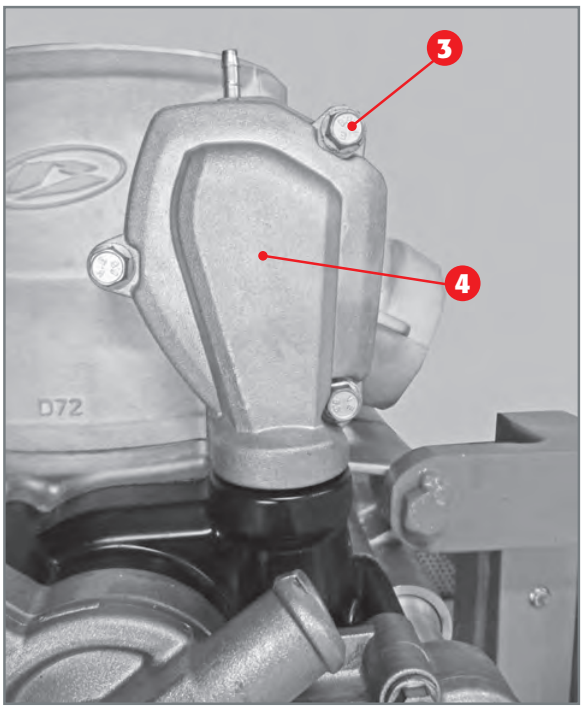

Remove the three screws **3** and cover **4.**

Downloaded from www.Manualslib.com manuals search engine

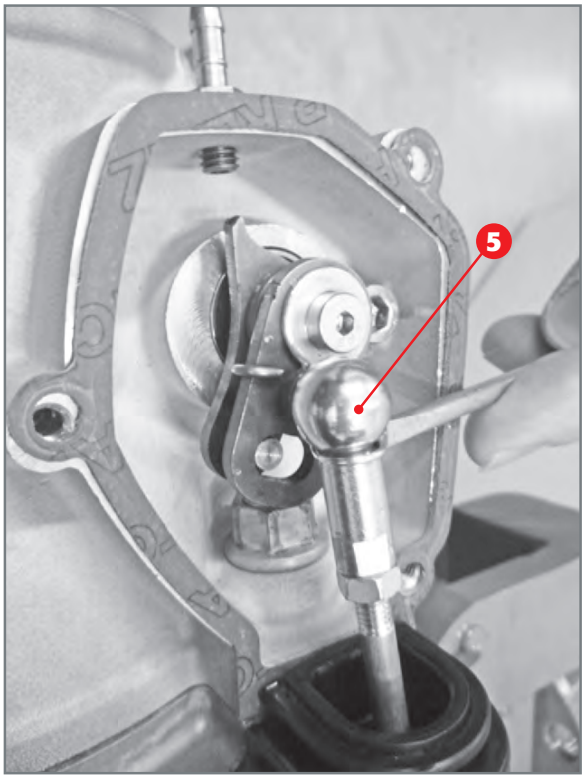

Release the lock **5** and remove it.

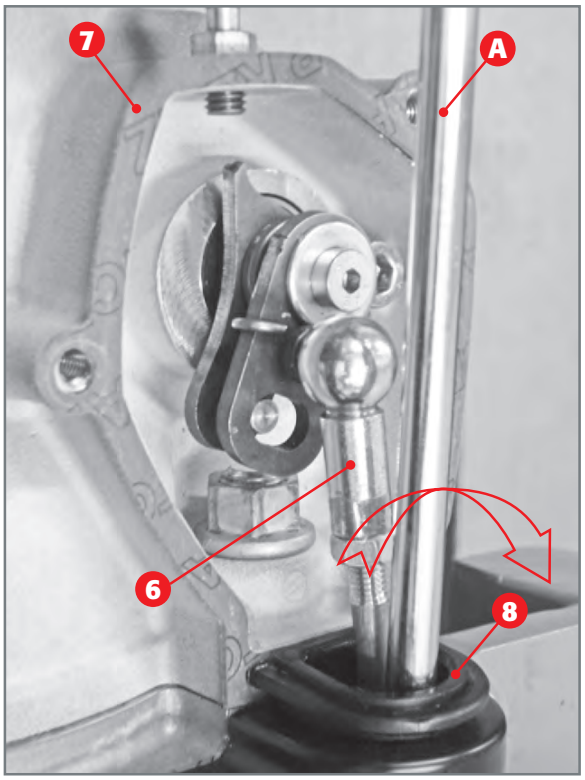

Removal of gasket 7.

Release the control rod **6**.

Remove the gasket **7**. It may be necessary to force the rubber gasket **8** slightly; place a metal pin **A** between the lever and the gasket **8** and force it externally slightly.

Downloaded from www.Manualslib.com manuals search engine

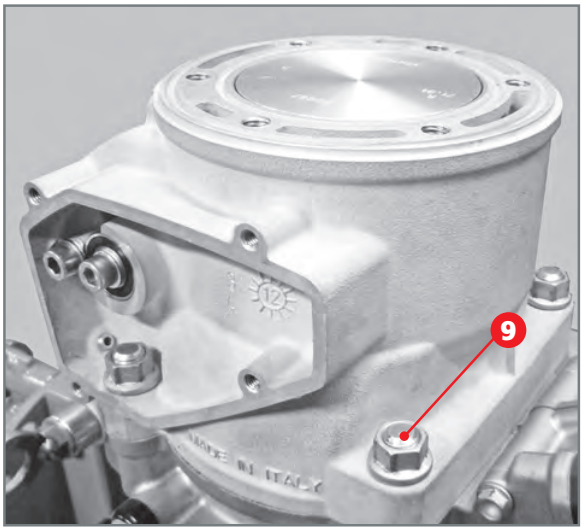

Extract the cylinder and base gaskets.

Remove the four collar nuts **9**.

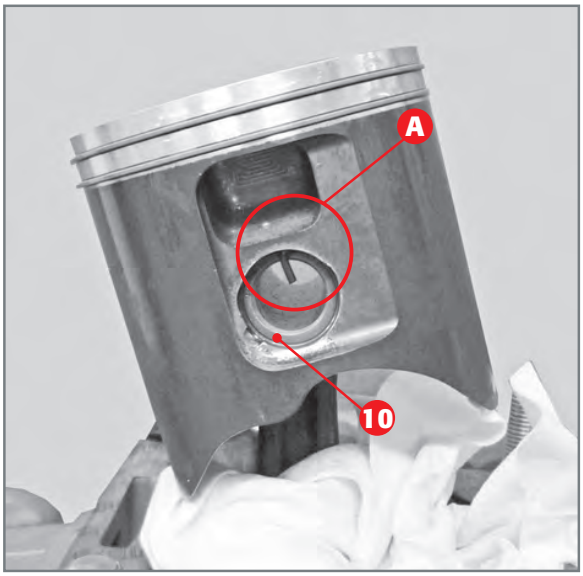

Removal of piston circlip.

ATTENTION!
Place a clean cloth between the piston and the crankcase to keep foreign objects or simple solid residue from falling inside the base.

Remove the circlip **10** by gripping it with a pair of fine nose pliers **A**.

Removal of pin bolt.

Push the pin bolt with an aluminium cylinder (or similar) **B**, until the pin bolt is released from the connecting rod foot
Remove the piston, the pin bolt and the bearing from the connecting rod foot.

ATTENTION: *Try pulling out the pin bolt by hand first of all. If it is too tight, hit the pin lightly with a rubber hammer, at the same time holding the piston with your hand in order not to stress the connecting rod.*

Downloaded from www.Manualslib.com manuals search engine

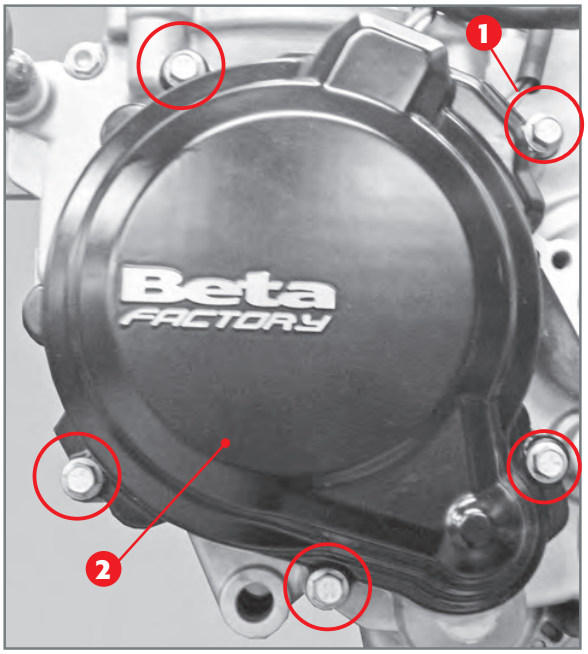

Fixing screws 1 of flywheel cover 2.

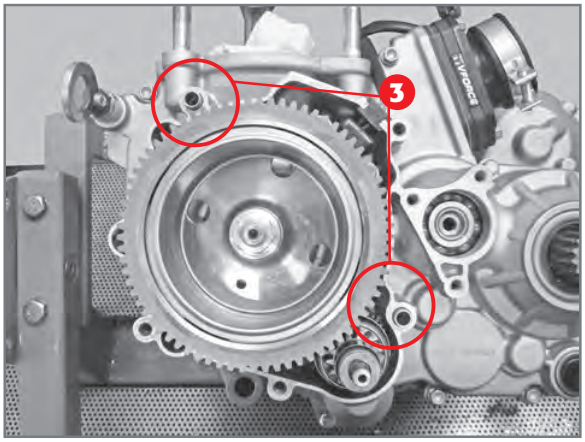

The two references pins 3 dedicated to the flywheel cover.

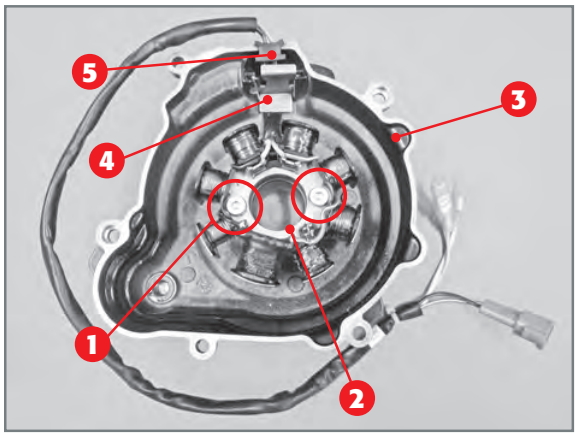

Disassembly of stator from cover.

2.4 REMOVAL OF IGNITION UNIT

The ignition unit is made up of the flywheel (or rotor), the pick-up and the stator which is one with the flywheel cover.

2.4.1 Removal of flywheel cover

Remove the five screws **1** fastening the flywheel cover **2** to the left crankcase.
Remove the flywheel cover and the gasket placed between the crankcase and the cover.

Be careful of the two centring pins **3** on the crankcase.

2.4.2 Removal of stator

Remove the two screws **1** fixing the stator **2** to the flywheel cover **3**. Extract the plate **4** and the cable gland **5** from the cover and extract the stator.

Downloaded from www.Manualslib.com manuals search engine

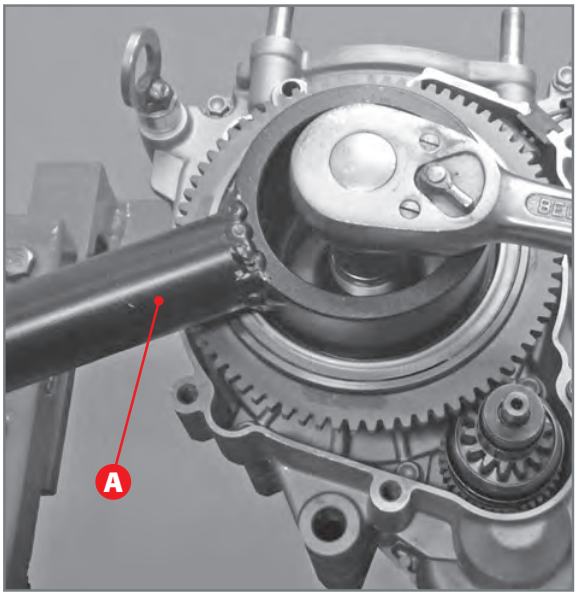

Removal of flywheel nut.

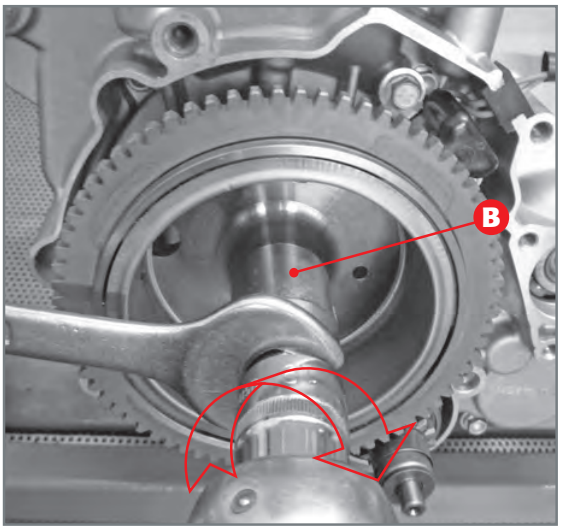

Release of flywheel using special tool B.

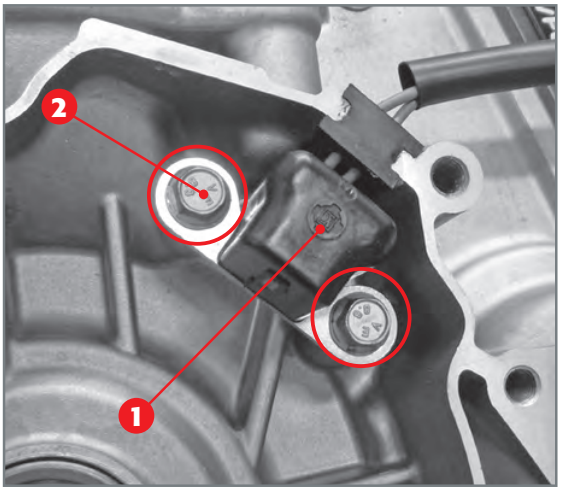

Removal of pick-up.

2.4.3 Removal of flywheel

Block the flywheel using special tool **A** (code 026140040 000) and remove the fastening nut securing the flywheel to the crankshaft.

NOTE: *Once the nut has been unscrewed, pay attention to the special elastic washer placed between the nut and the flywheel.*

To remove the flywheel, tighten the extractor **B** (code 3625173) onto the threaded part on the flywheel.
Keep the extractor blocked with spanner and tighten the screw on the extractor using a box spanner.

2.4.4 Removal of pick-up

Remove pick up **1** by loosening the two fixing screws **2**.

Downloaded from www.Manualslib.com manuals search engine

2.5 REMOVAL OF ELECTRIC IGNITION

The electric ignition is carried out by means of start motor **1** that meshes on the Bendix coupling **4**. The coupling gear axially shifts and meshes onto the ring gear which is one with the flywheel, due to the start motor rotation. The coupling gear retracts to its rest position, once the motor action is terminated.

EXPLODED VIEW OF ELECTRIC KICKSTART:

1) Start motor;
2) O-ring;
3) Screws;
4) Bendix coupling;
5) Bush with collar.

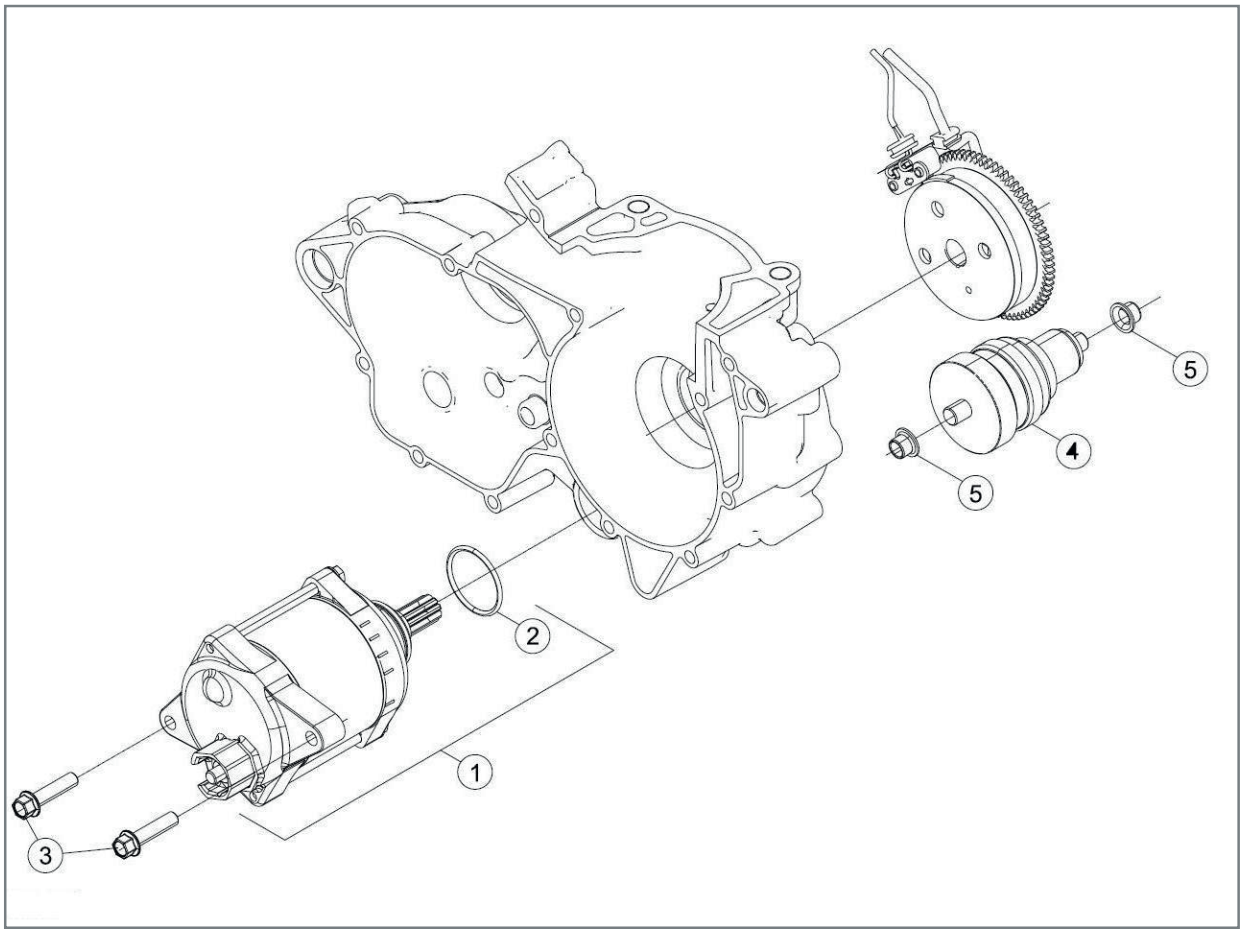

Downloaded from www.Manualslib.com manuals search engine

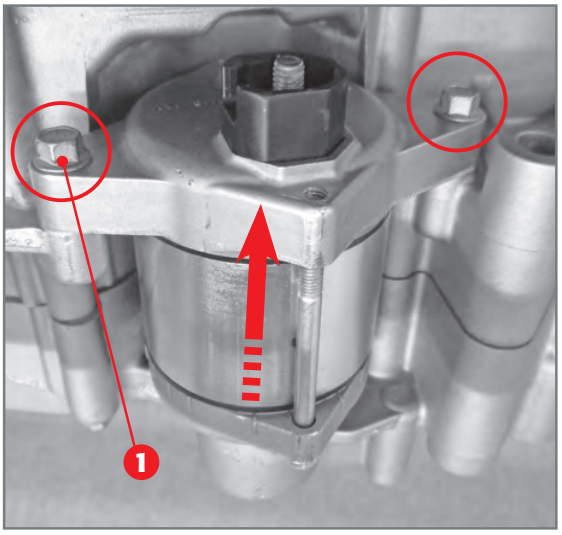

Removal of start motor.

2.5.1 Removal of start motor

Remove the two screws **1** and extract the motor itself.

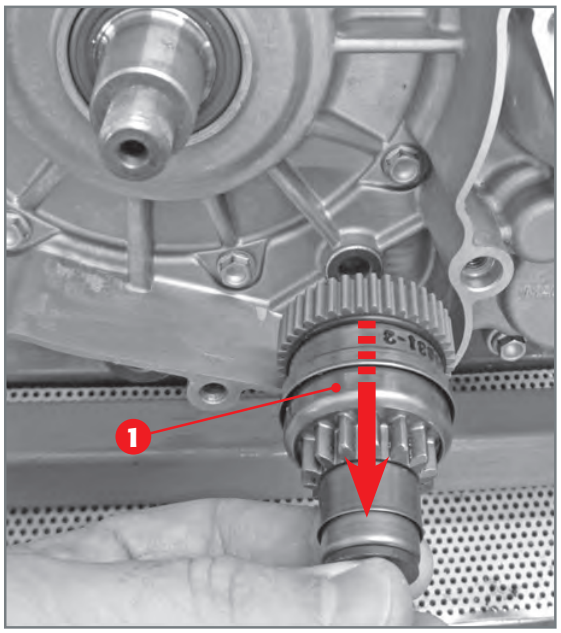

Rimozione innesto Bendix.

2.5.2 Removal of Bendix coupling

Extract the Bendix coupling **1** once the complete flywheel cover and flywheel itself (see par. 2.4.1), have been removed.

Downloaded from www.Manualslib.com manuals search engine

2.6 REMOVAL OF COOLANT LIQUID PUMP, CLUTCH UNIT, MAIN GEAR, CENTRIFUGAL UNIT, GEARSHIFT ORGANS, KICKSTART

Remove the cover **1** by loosening the four screws **2**, to access the coolant liquid pump.

Note: *remove the coolant liquid pump impeller if having to intervene on the centrifugal unit.*

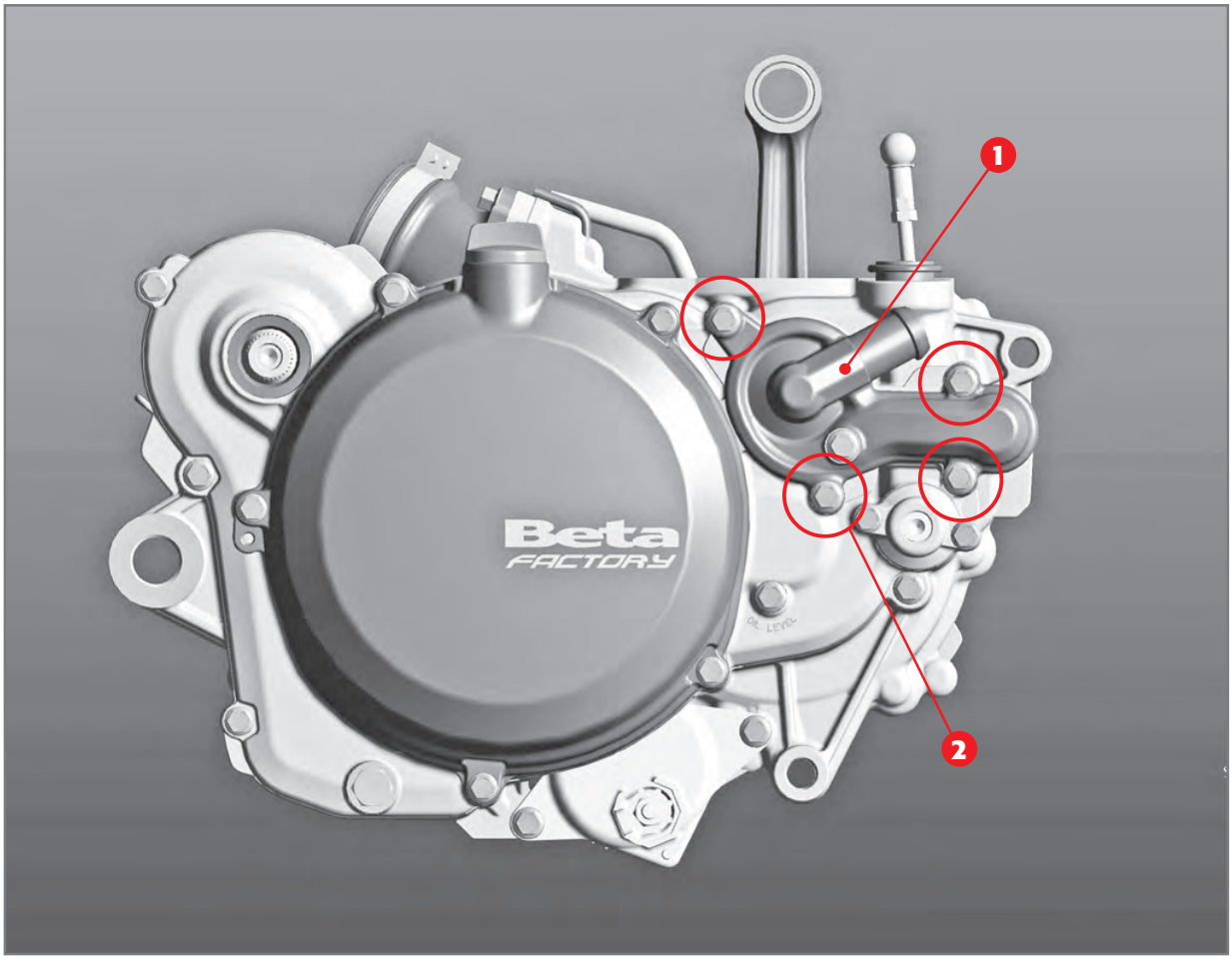

Coolant liquid pump cover screws.

Downloaded from www.Manualslib.com manuals search engine

Remove the outer clutch cover **3** by loosening the five screws **4**, to access the clutch unit only.

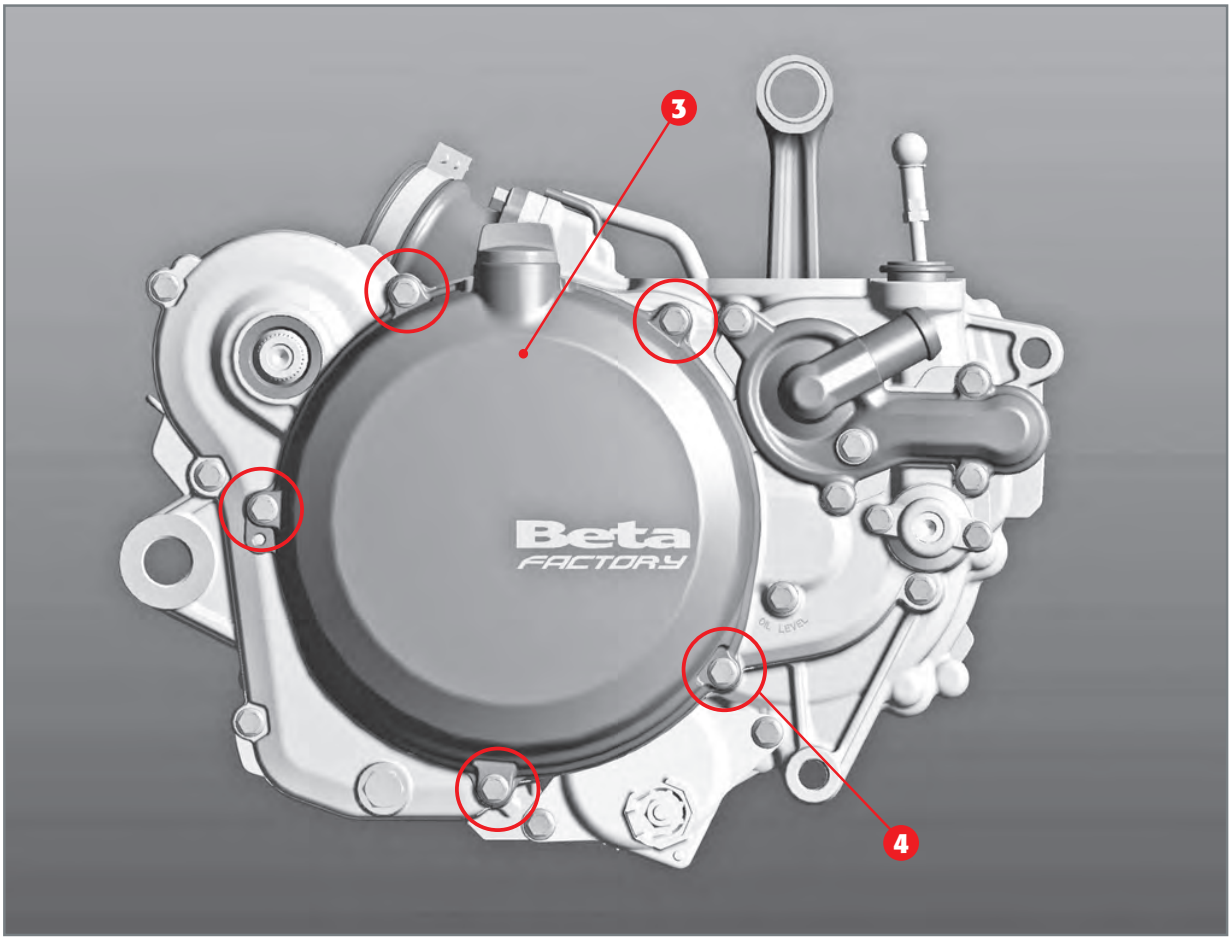

Outer clutch cover screws.

Downloaded from www.Manualslib.com manuals search engine

When doing a complete overhaul of the engine or of gearshift organs, kickstart, main transmission or centrifugal unit, the inner clutch cover **5** must be removed by loosening the nine screws **6**.

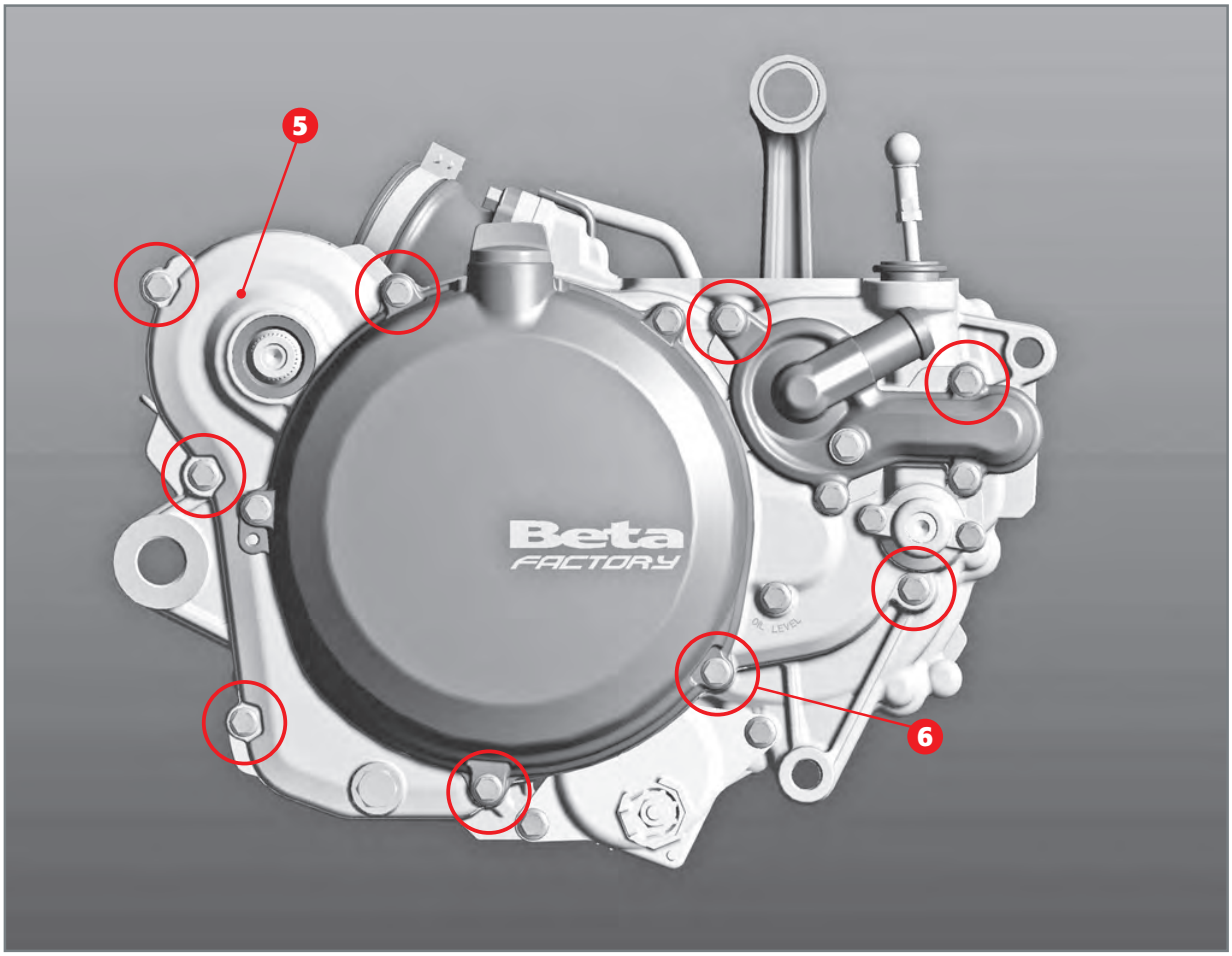

Inner clutch cover screws.

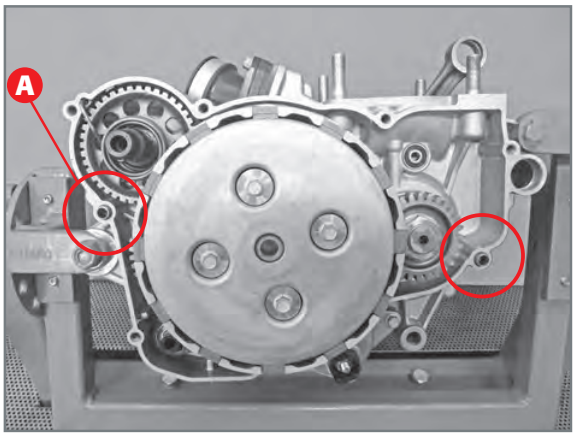

Two centring pins A for inner clutch cover coupling.

Pay attention to the two reference pins **A** placed between the right crankcase half and the inner clutch cover while disassembling.

Downloaded from www.Manualslib.com manuals search engine

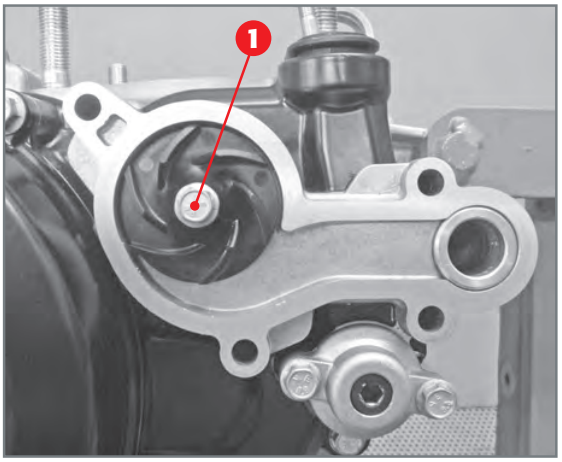

Cooling pump fixing screw.

2.6.1 Removal of coolant liquid pump

Loosen fixing screw **1** once the coolant liquid pump cover has been removed.

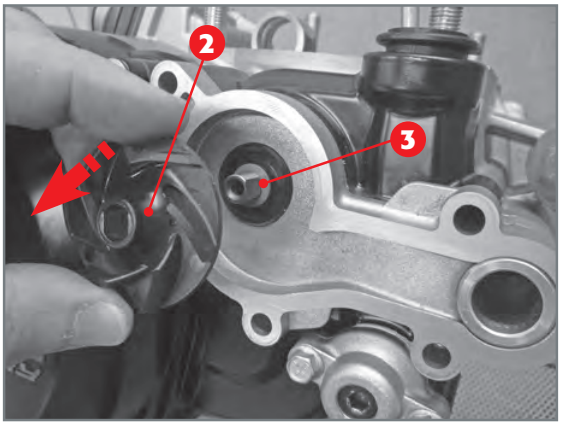

Removal of impeller.

Extract the impeller **2** and the thrust **3**.

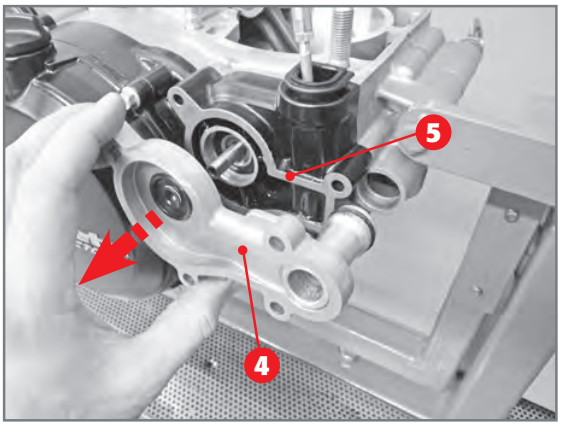

Removal of pump body and gasket.

Extract the complete pump body **4** and remove gasket **5**.

Downloaded from www.Manualslib.com manuals search engine

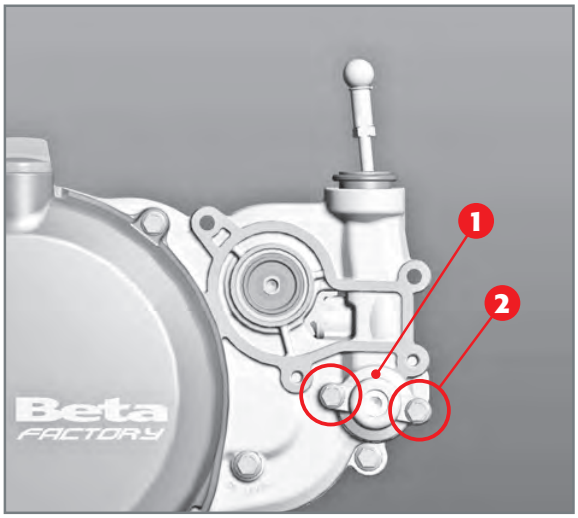

Removal of centrifugal adjustment cover.

2.6.2 Removal of centrifugal unit and leverage

Access the centrifugal unit and leverage by removing the inner clutch cover. Disassemble the adjustment cover **1** by removing the two screws **2**, once the pump impeller has been removed (par. 2.6.1).

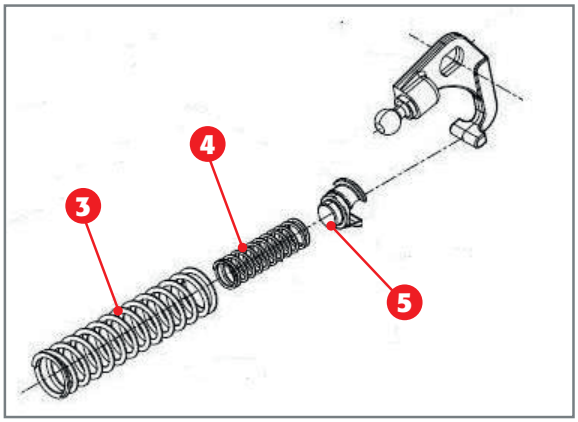

Remove the unit consisting of adjusting **3** and auxiliary **4** springs and the spring guide **5**.

Downloaded from www.Manualslib.com manuals search engine

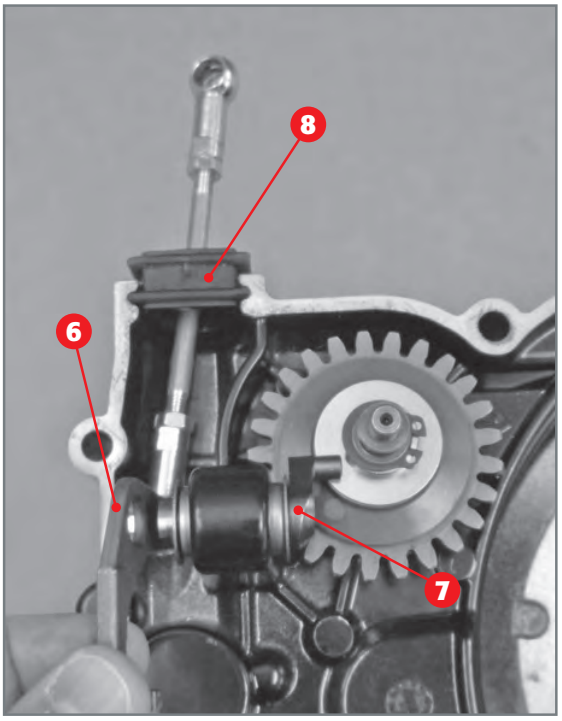

Disassembly of control rod-rocker arm unit.

Extract the rocker arm complete of control rod and gasket **8**, once the screw fixing the rocker arm **6** to the centrifugal control lever **7** has been removed.

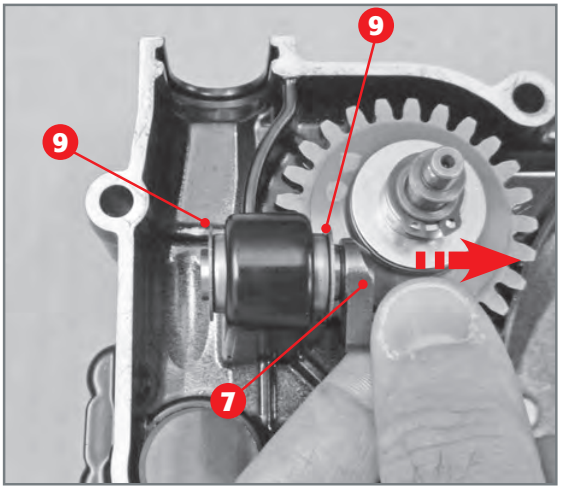

Removal of centrifugal control lever.

Extract the centrifugal control lever **7** together with the two thrust washers **9**.

Downloaded from www.Manualslib.com manuals search engine

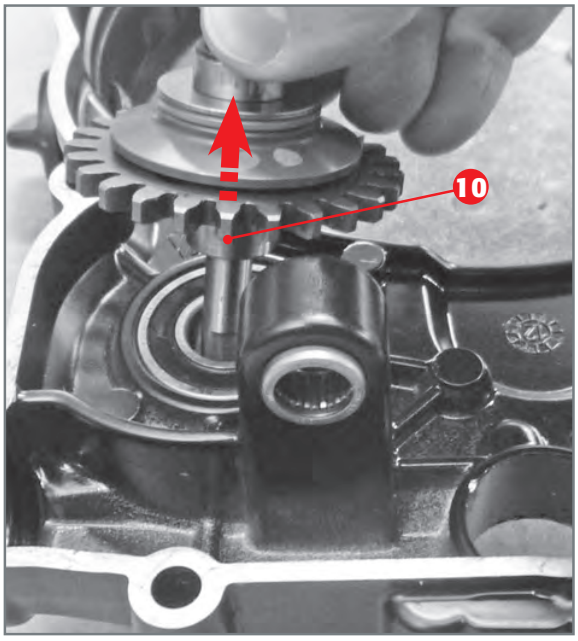

Extraction of centrifugal unit.

Extract the complete centrifugal unit **10**.

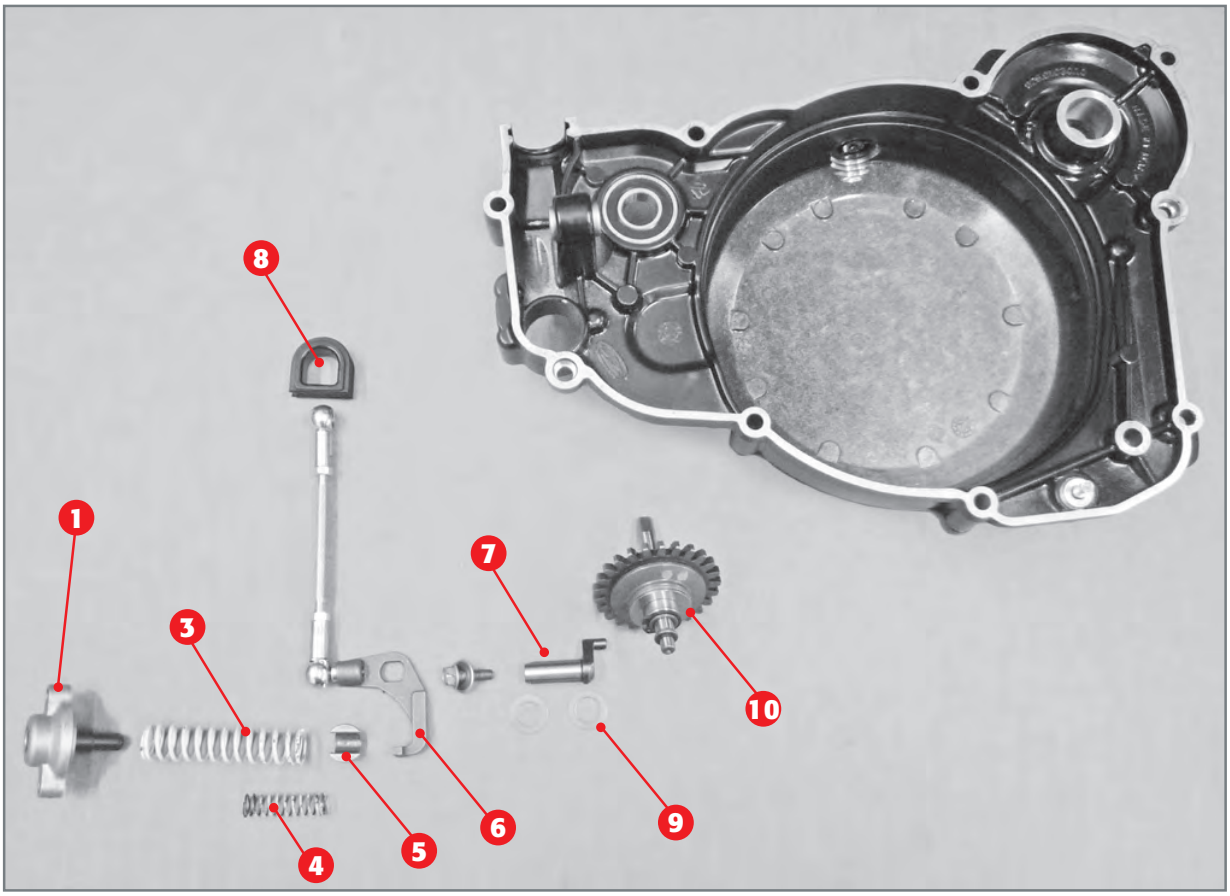

1) Control cover;
3) Adjusting spring;
4) Auxiliary spring;
5) Spring guide;
6) Rocker arm;
7) Centrifugal control lever;
8) Gasket;
9) Thrust washers;
10) Centrifugal unit.

Downloaded from www.Manualslib.com manuals search engine

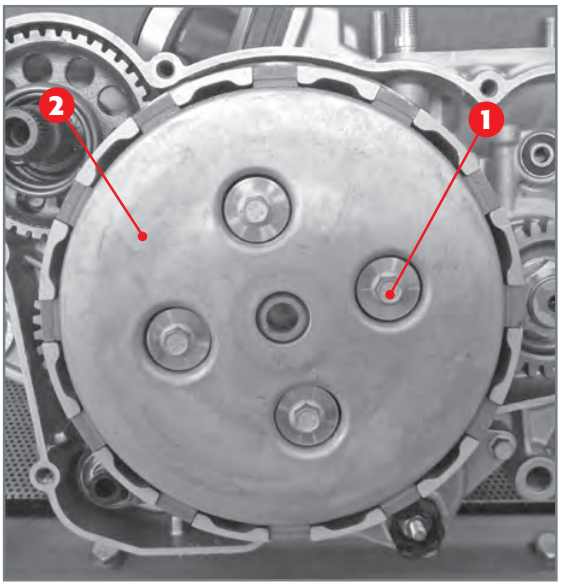

Clutch cap 2 and four screws 1.

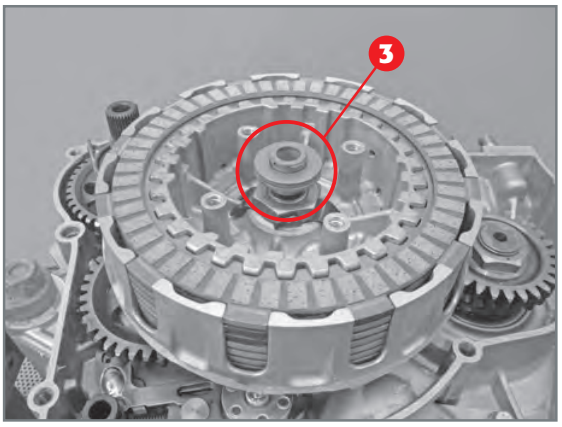

Pressure plate unit 3 and clutch disc pack.

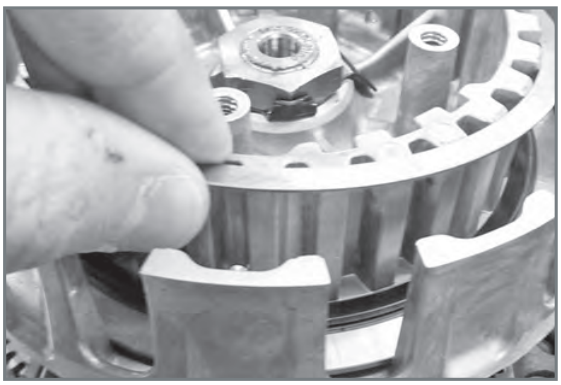

Removal of disc spring assembly.

2.6.3 Removal of main gear and clutch unit

Remove the four screws **1** fastening the clutch cap **2** to the clutch drum.
Remove the clutch cap together with the four washers and relative springs.

Extract the whole pressure plate unit **3** and the clutch disc pack.

Remove the special driven disc and the disc spring assembly.

Downloaded from www.Manualslib.com manuals search engine

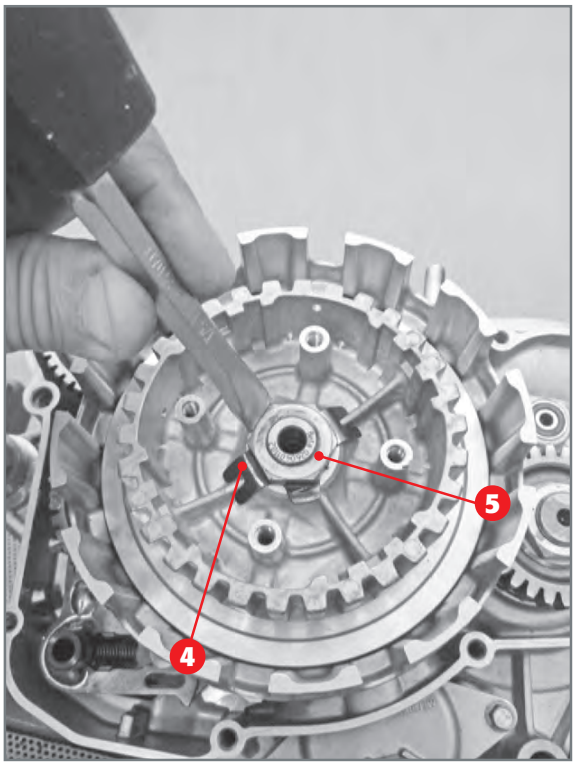

Opening of the safety washer with chisel.

In order to complete the disassembly of the clutch unit, open the safety washer **4** using a chisel or similar tool and remove the nut **5**.

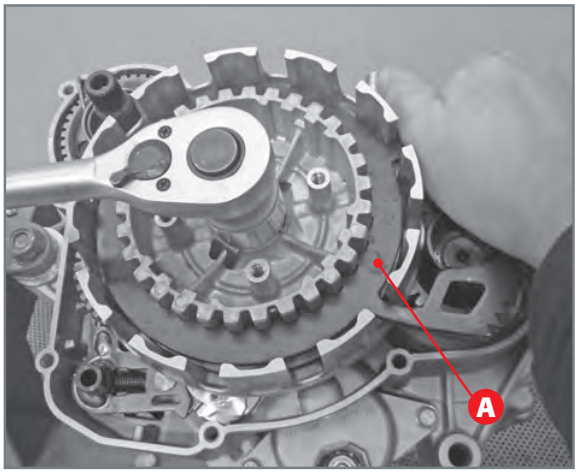

Removal of clutch drum nut with relevant tool A.

To unscrew the nut 5, the clutch drum must be blocked with a relevant tool **A** (code 026140010 000).
Insert the main special tool on the drum so that:

- its inner teeth mesh in those present on the clutch drum;
- the tube on the tool inserts on the main gear nut.

Loosen the clutch nut.

Attention! *Do not use the pneumatic gun.*

Extract the clutch drum.

Downloaded from www.Manualslib.com manuals search engine

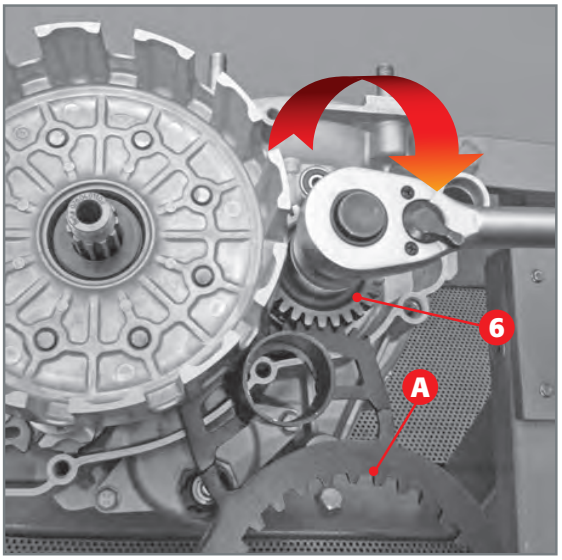

Disassembly of the main gear nut.

Using the main special tool **A** (code 026140010 000), disassemble the nut fastening the main gear **6** to the crankshaft.

NOTE: *the clutch case must be in its seat to be able to disassemble the main gear.*

Attention! *The nut must be turned clockwise*

Remove the washer **7**, the case **8**, the roller cage **9** and the centre bearing **10.**

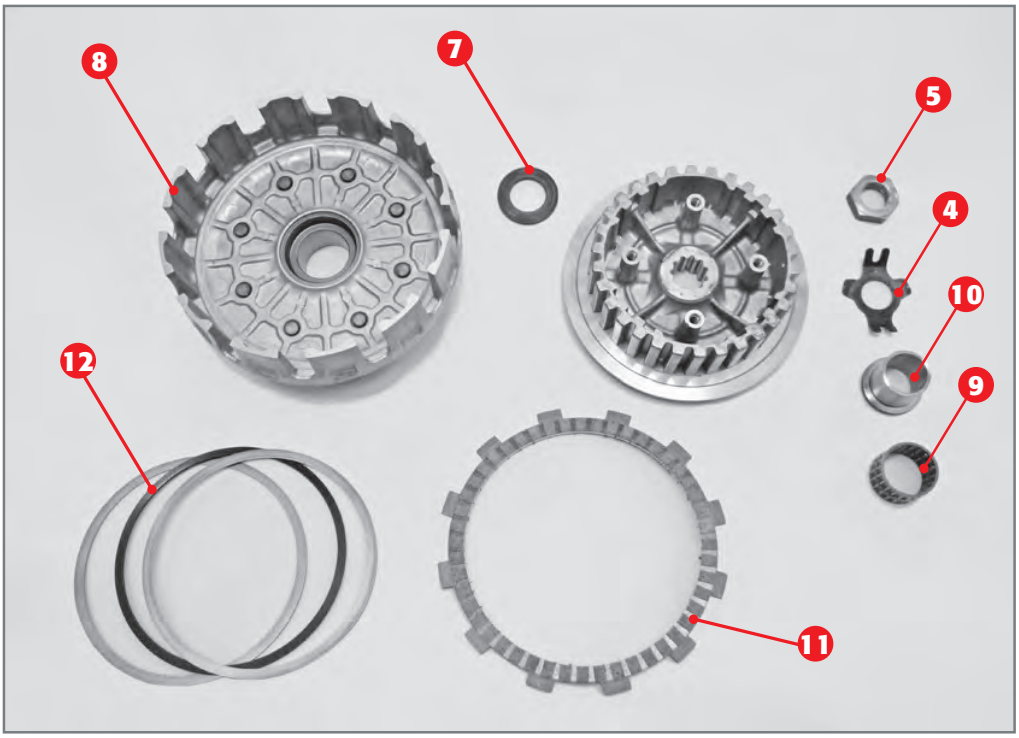

Safety washer 4; nut 5; washer 7; case 8; roller cage 9; centre bearing 10; special driven disc 11; disc spring assembly 12.

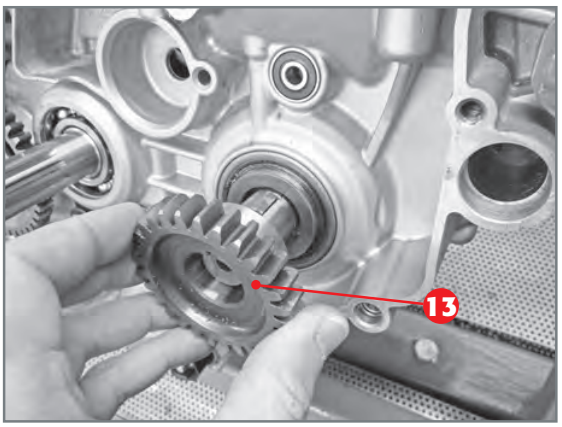

Removal of main gear.

Extract the main gear **13**.

Downloaded from www.Manualslib.com manuals search engine

2.6.4 Pedal kickstart

The kickstarter is made up of the pedal which, attached to the kickstarter shaft **1**, moves the kickstarter gear **2**. This gear moves the idler wheel **3** which then meshes with the clutch case.
The device moves back thanks to the spring **4**.

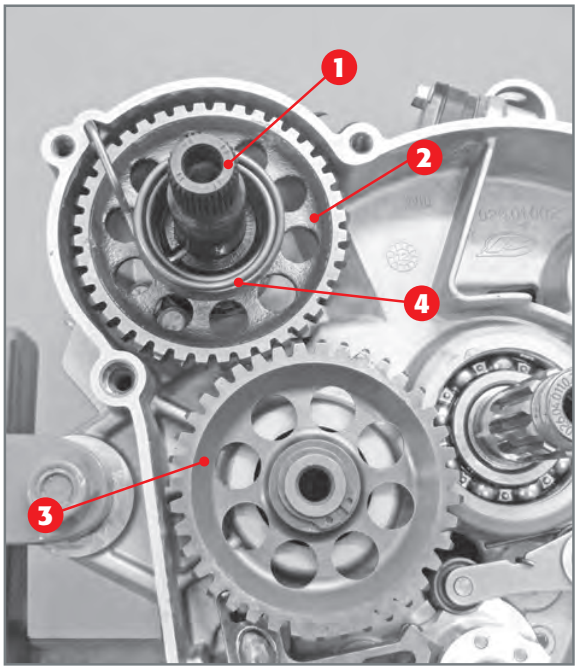

Kickstarter mechanism.

Remove the external circlip **5** and pull off the external thrust washer **6**, the idler gear **3**, the internal thrust washer **7** and the second circlip **8**. The circlips and thrust washers are interchangeable.

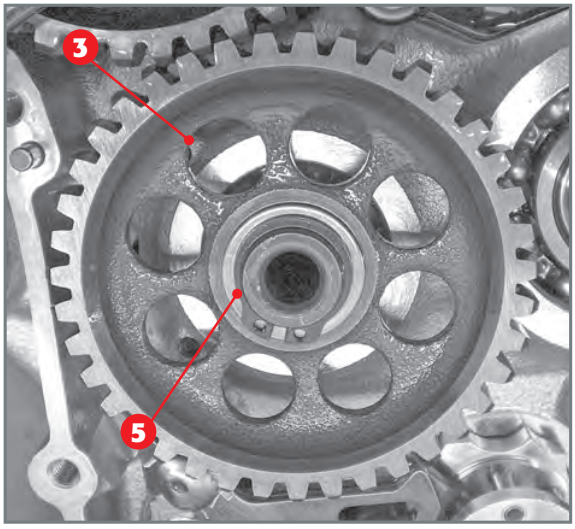

Removal of circlip 5 of idler gear 3.

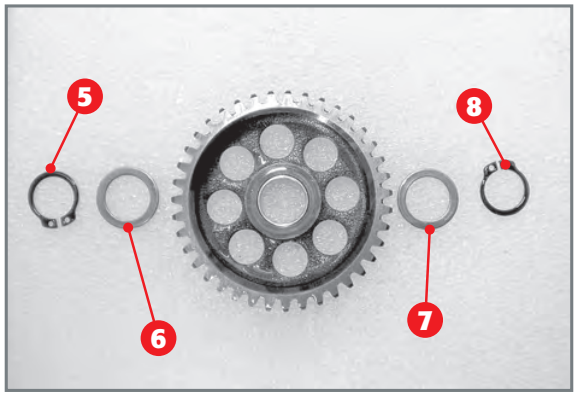

Two circlips 5 and 8 and thrust washers 6 and 7.

Downloaded from www.Manualslib.com manuals search engine

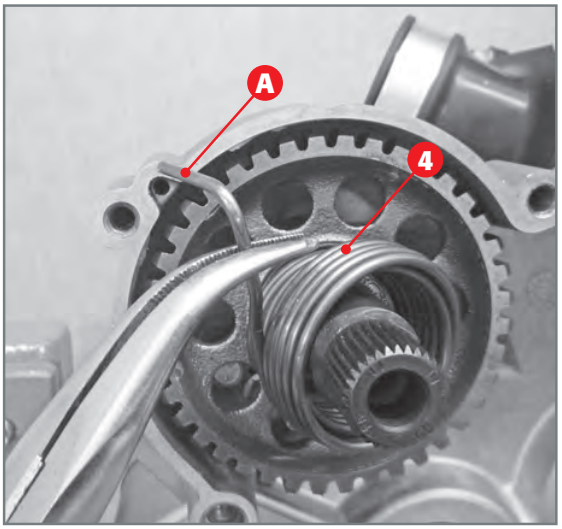

Release of spring from crankcase.

Using a pair of pliers, pull the end **A** of the spring **4** from the hole on the crankcase and bring it to a rest position having it turn anti-clockwise.

Extraction of shaft from crankcase.

Turn the shaft anti-clockwise and pull it off together with the sleeve **9**, the spring **10** and the thrust washer **11.**

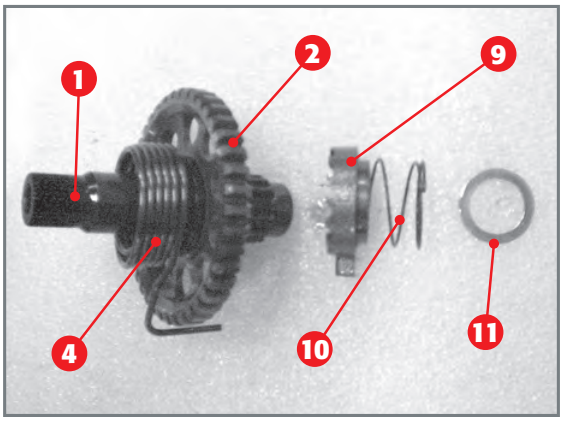

Complete pedal kickstart shaft.

Downloaded from www.Manualslib.com manuals search engine

2.6.5 External gearshift unit

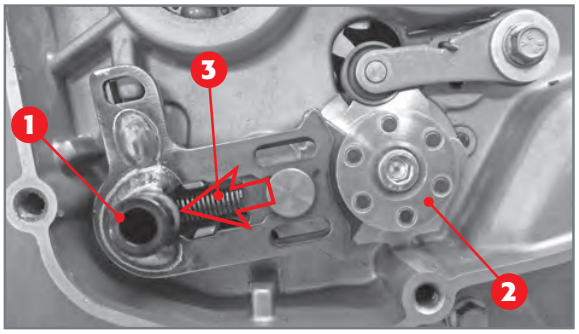

The external gearshift is made up of the drive shaft **1** upon which the movable and fixed pawls are applied. The fixed pawl constitutes the guide of the movable pawl which has the task of engaging the stop cam **2**. This in turn is fastened to the internal gearshift and is kept in the fixed position by the cam stop lever.
In order to disassemble the drive shaft, just keep the movable pawl return spring **3** pressed and extract the shaft together with specific washer **4**.

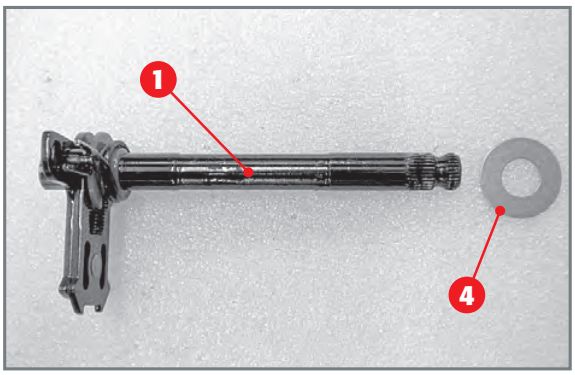

Gearshift with washer.

In order to disassemble the stop cam **2**, keep the cam stop lever moved **5**, loosen the screw **6** and pull out the stop cam**2**.

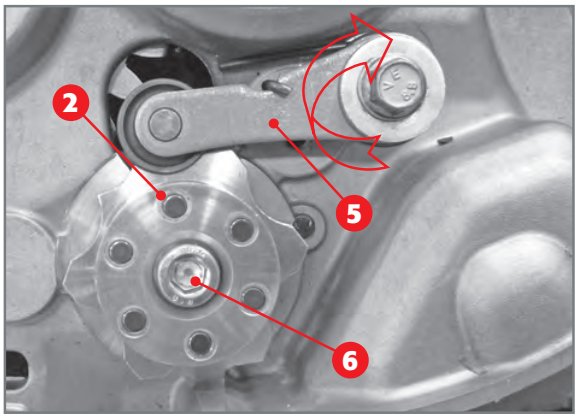

Disassembly of stop cam.

In order to disassemble the stop lever, loosen the screw **7** enough to allow the lever to move axially and overcome the cylinder segment **A** of the desmodromic device. Bring the return spring **8** to the rest position and remove the screw, the washer **9**, the spring together with the spacer (not shown in the image) and finally the cam stop lever.

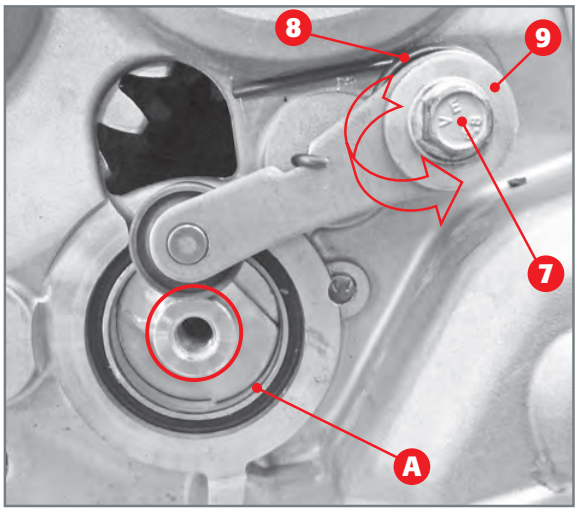

Disassembly of cam stop lever.

Downloaded from www.Manualslib.com manuals search engine

2.7 INTAKE SYSTEM

The intake system mainly consists of the intake manifold **1** and reed valve **2** and the spacer **3**.

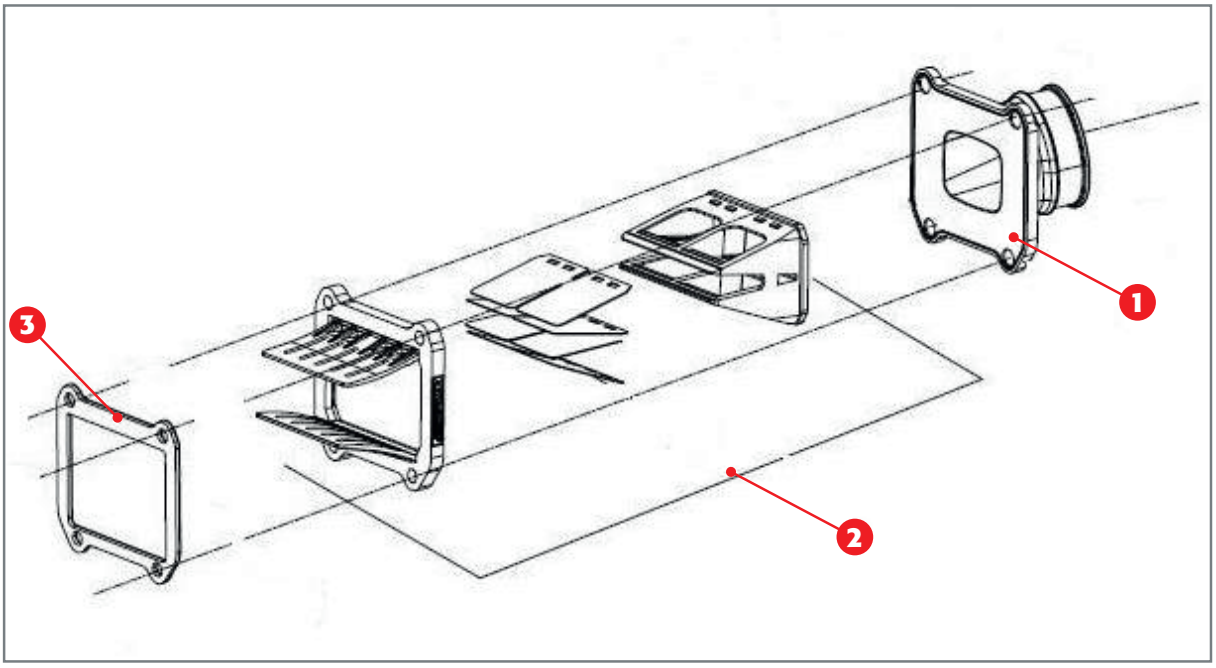

1) Intake manifold;
2) Complete reed valve;
3) Spacer.

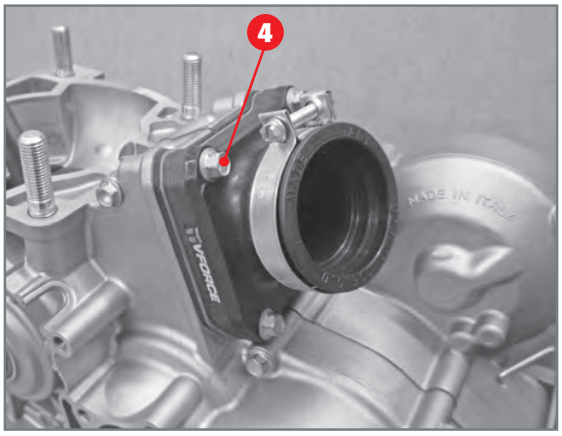

Fixing screws.

Disassemble by removing the four screws **4** fastening the intake manifold and the reed valve to the crankcases.

Downloaded from www.Manualslib.com manuals search engine

2.8 CRANKSHAFT, GEARBOX UNIT AND INTERNAL GEARSHIFT

To access the crankshaft, gearbox unit and internal gearshift, the left and right crankcases must be detached. Here are the needed instructions.

2.81 Opening of crankcase

Remove the thirteen screws **1** fastening the crankcases.

Attention! *Loosen the two equipment fixing screws A.*

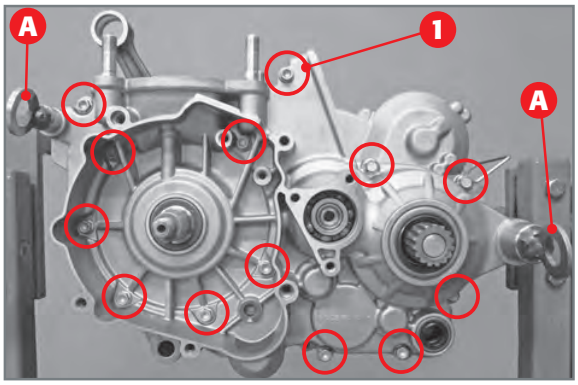

Removal of crankcase screws.

Apply special tool **B** to the right crankcase half following the punching on the tool itself. Fix the tool with the four M6x20 screws (maximum torque 10Nm). Tighten screw **C** on the special tool. Slightly hit the gear secondary with a rubber mallet during said operation.
Once the crankcases have been detached, remove the two fixing screws to the equipment **A** and remove the left crankcase.

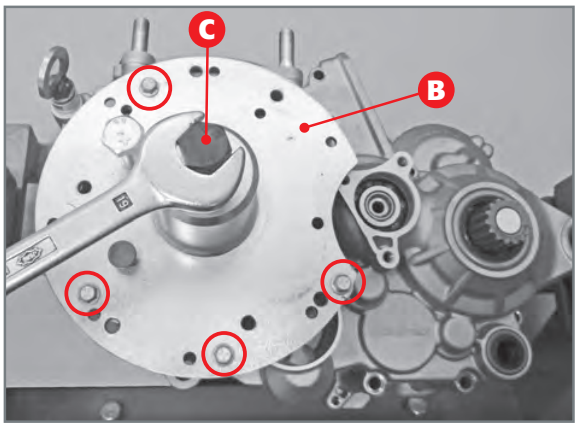

Crankcase uncoupling phase.

Remove the two rear **2** and front **3** reference pins. Remove the coupling gasket to the two crankcases.

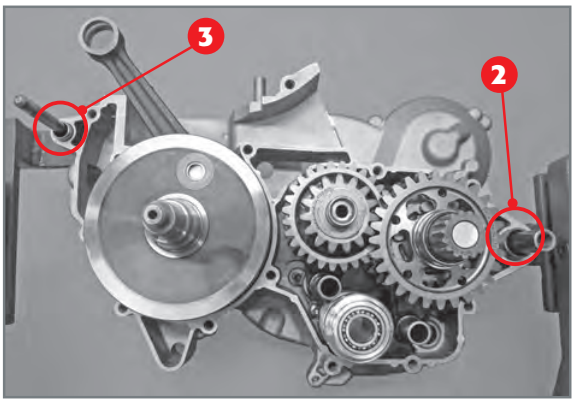

Crankcase half reference pins.

Downloaded from www.Manualslib.com manuals search engine

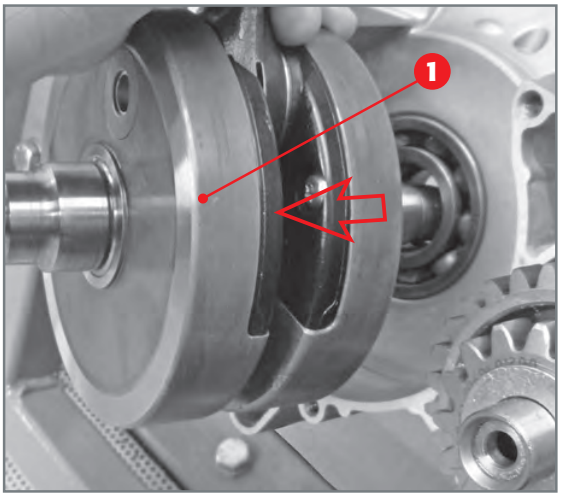

Removal of crankshaft.

2.8.2 Motor shaft

The crankshaft **1** can be pulled out by hand. Delicately hit the crankshaft far right in case of resistance.

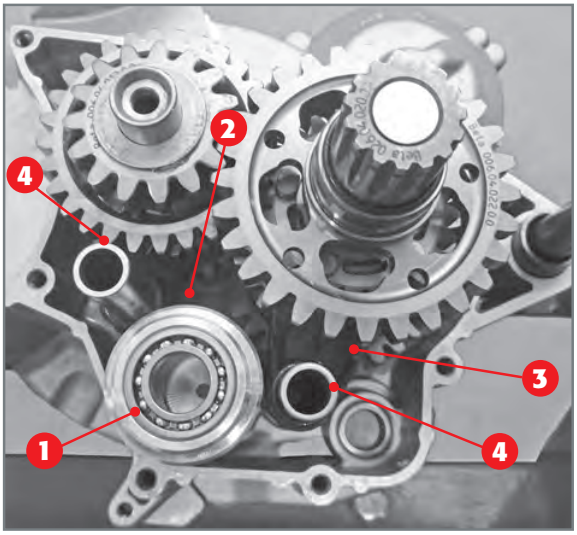

Disengaging of drive forks from the desmodromic device.

2.8.3 Internal gearshift unit and complete gearbox

The internal gearshift unit is made up of the desmodromic device **1** upon which the fork **2** and two forks **3** are engaged. The forks, supported by the pins **4**, drive the sliding wheels of the gearbox, allowing engagement of the desired ratio. The desmodromic device is controlled by the stop cam present in the external gearshift unit.
Extract the two pins **4** by hand so that the forks can be released and removed.

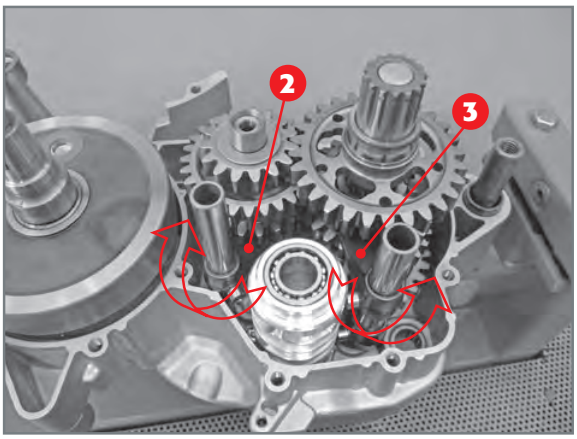

Extraction of forks from gearbox unit.

Turn the fork **2** which drives the sliding gear on the primary unit clockwise, to free it from the desmodromic control.

Do the same operation, though in the opposite direction, on the forks **3** driving the sliding gears on the secondary shaft.

Extract the desmodromic device.

Downloaded from www.Manualslib.com manuals search engine

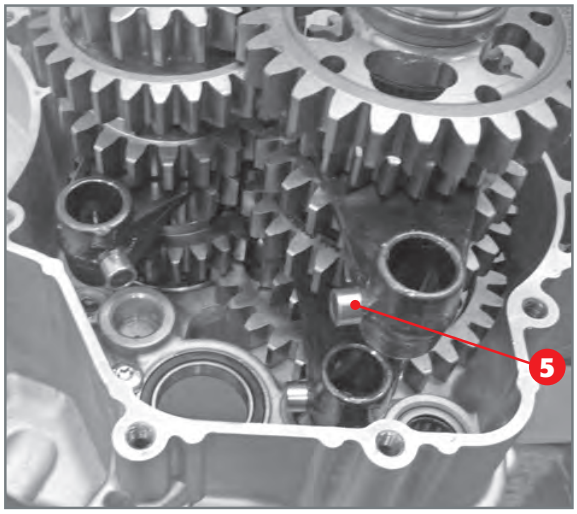

Extraction of forks from gearbox unit.

Extract the forks together with the drive bushes **5**.

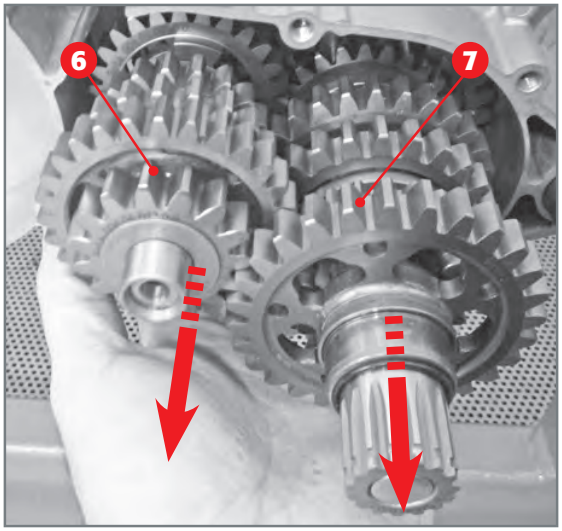

Extraction of complete gearbox unit: 6 main unit, 7 secondary unit.

Proceed to extract the complete gearbox unit including the primary **6** and secondary unit **7**.

2.9 DISASSEMBLY OF PARTS FROM CRANKCASES

Once the crankcases have been detached, it is necessary to remove the various components attached to it.

The bearings must be replaced if they play or get jammed during rotation. For removal, oven heat the crankcase halves for 20 minutes at about 150°C.
Place the crankcase halves on a large surface where their whole seal surface can rest. Remove the bearings following the indications below.

2.9.1 Right crankcase half

On the external side, remove the kickstart ramp **1**, the crankshaft spacer **2** and relative O-ring and crankshaft oil seal **3**.

Downloaded from www.Manualslib.com manuals search engine

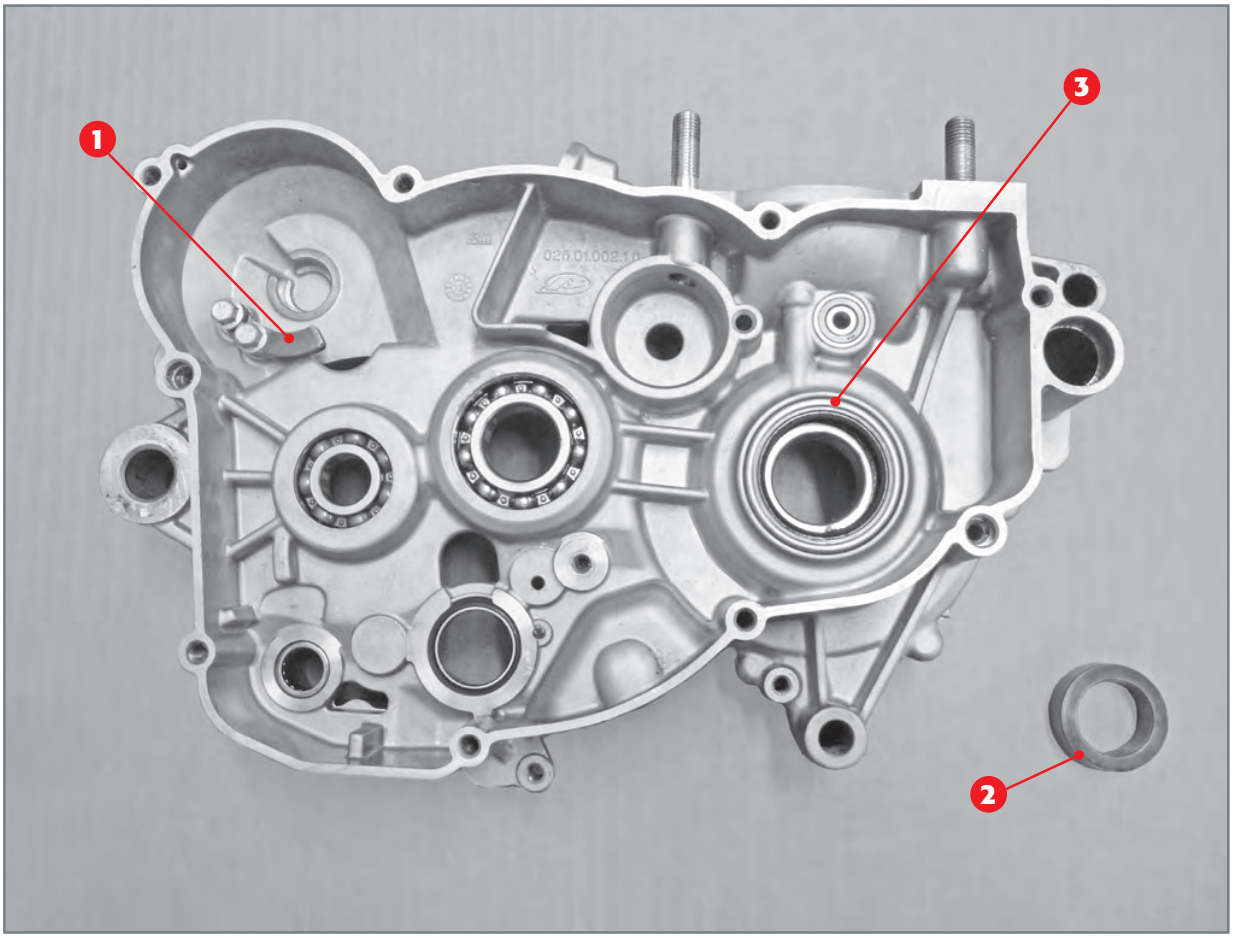

Kickstart ramp 1), crankshaft spacer 2) (and relative O-ring), oil seal 3).

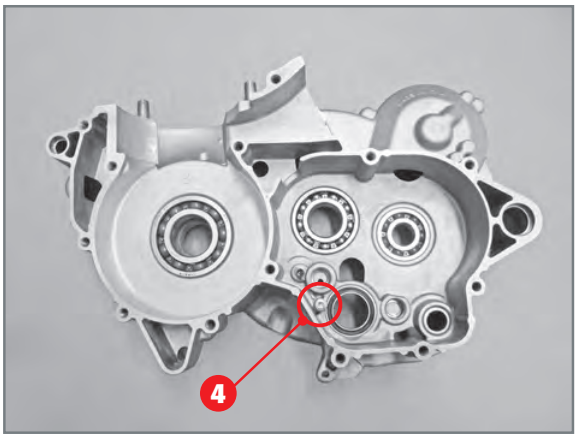

Bearing safety screw.

Remove the desmodromic control bearing seal screw **4** from the inner side.

Downloaded from www.Manualslib.com manuals search engine

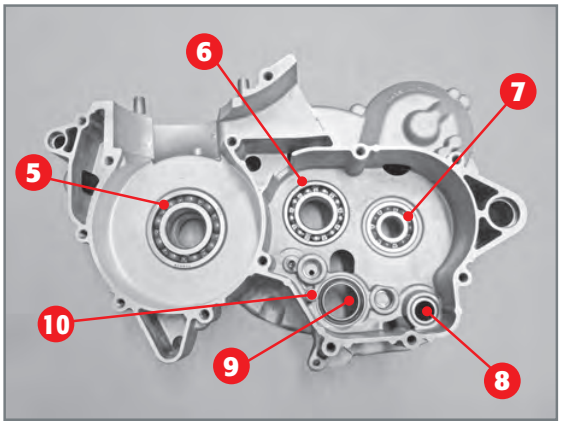

The bearings **5**, **6**, **7**, **8** and **9** are removed from the outside to the inside.
Remove fixing screws **10** to disassemble bearing **9**.

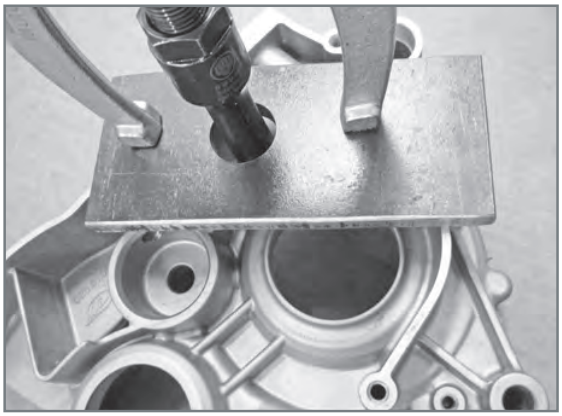

The centrifugal shaft bearing can be removed by using a universal extractor that must rest onto a purposely created metal plate.

Downloaded from www.Manualslib.com manuals search engine

2.9.2 Left crankcase half

Remove the crankshaft oil seal **1**, the secondary shaft oil seal **2** and the gearshift shaft oil seal **3** from the external side.

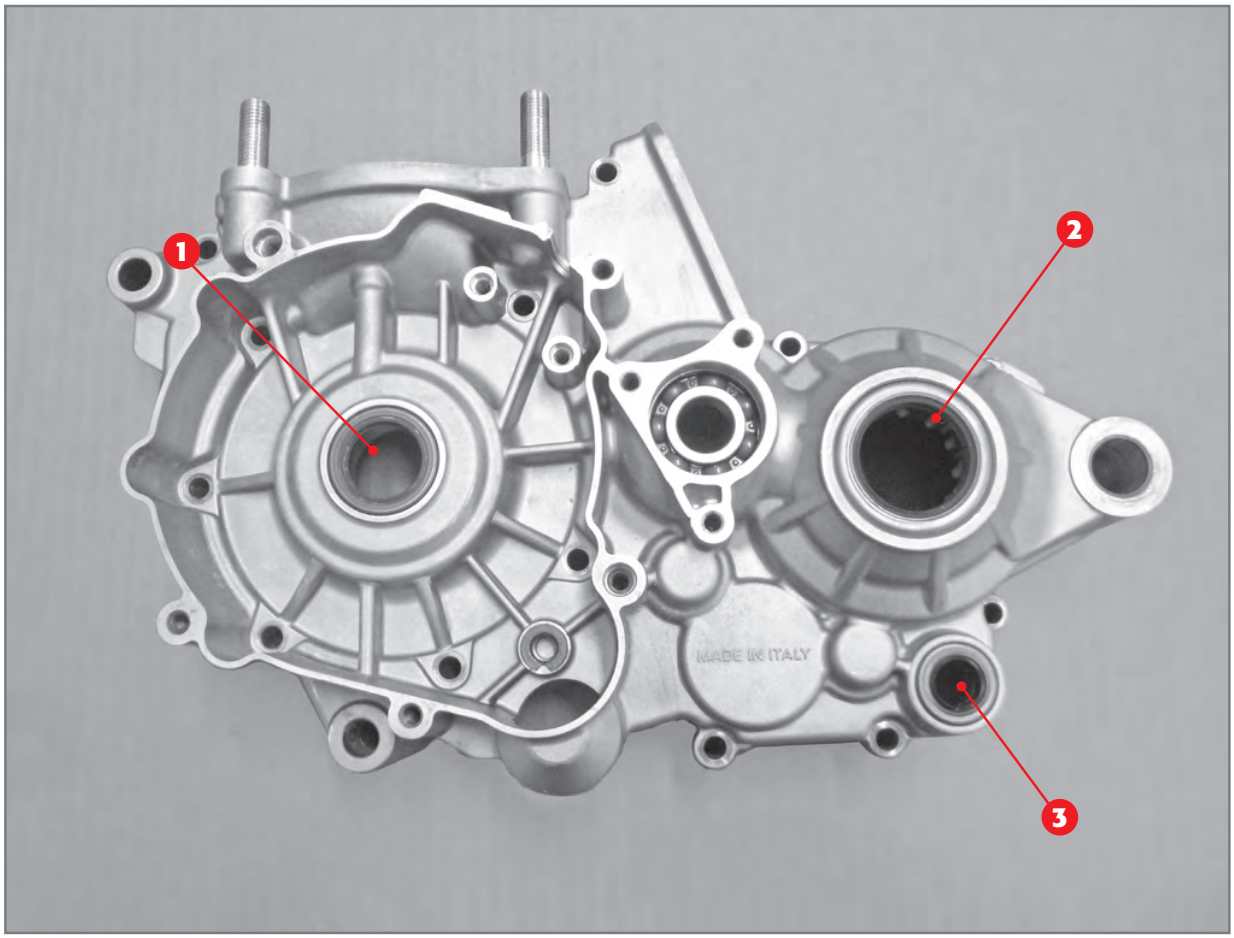

Removal of outer side left crankcase half oil seal.

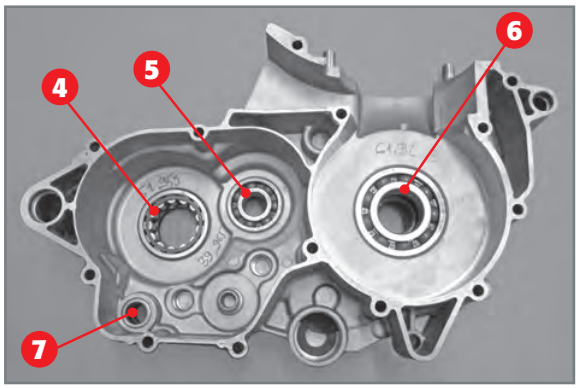

Removal of left crankcase half bearings.

The bearings **4**, **5**, **6** and **8** are removed from the outside to the inside.

Downloaded from www.Manualslib.com manuals search engine

3 MOTOR CHECKS AND ASSEMBLY

Before reassembling the engine, a series of important checks must be carried out to ensure correct functioning of the engine.
In order to insert the bearings in the crankcase halves, bring the crankcase halves to a temperature of 150°C and keep them at that temperature for 20 minutes.
Place the crankcase halves on a large surface where their whole seal surface can rest. When the bearings cool down, they drop into their seats on their own.

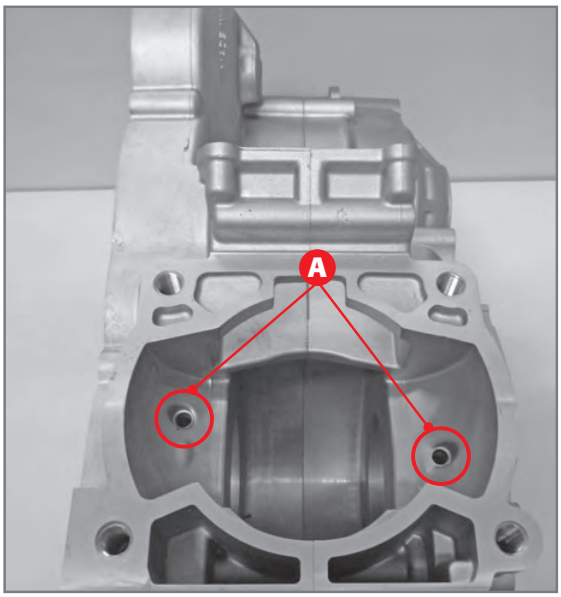

Crankshaft bearings lubrication holes.

3.1 CRANKCASE HALF

The crankcase halves have some elements that need to have their integrity and use status checked. Hereafter the checks and assembly operations of the individual elements coupled to the crankcases will be described. Clean the threading and oil passages **A** thoroughly using a degreaser and compressed air.

Downloaded from www.Manualslib.com manuals search engine

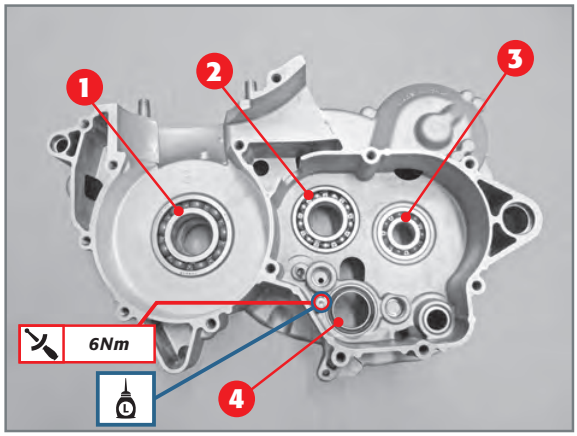

Placing of right crankcase half bearings.

3.1.1 Application of right crankcase half parts

Apply the bearings **1**, **2**, **3** and **4** until flush.
Block bearing **4** with specific screw, prior depositing of threadlockers. Fasten at 6Nm.

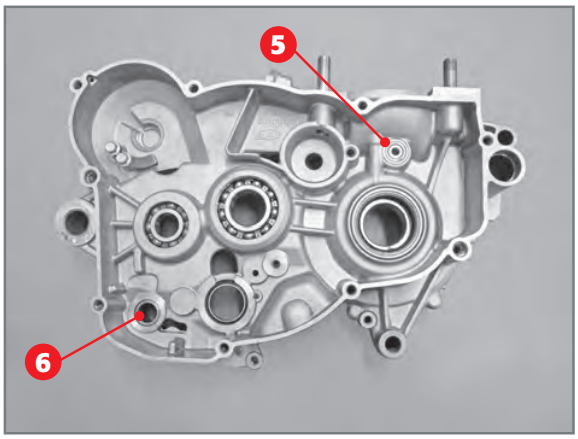

Application of bearings from right crankcase half external side.

Apply the bearing **5** from the crankcase half external side, until it is flush, and bearing **6** as shown in the drawing.
Apply new oil seals, to be pressed in seat until they are flush.

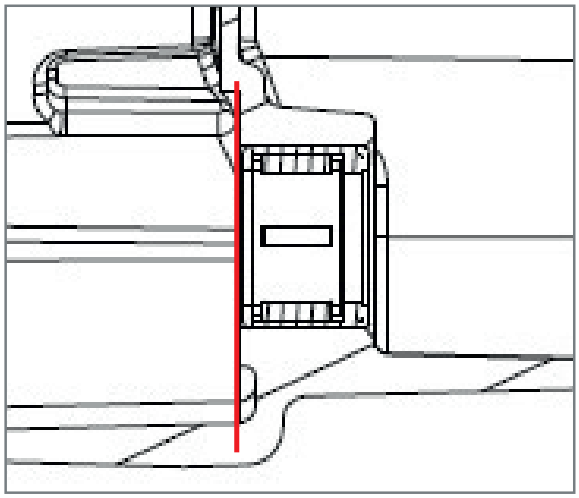

Position of right crankcase half gearshift shaft bearing.

Downloaded from www.Manualslib.com manuals search engine

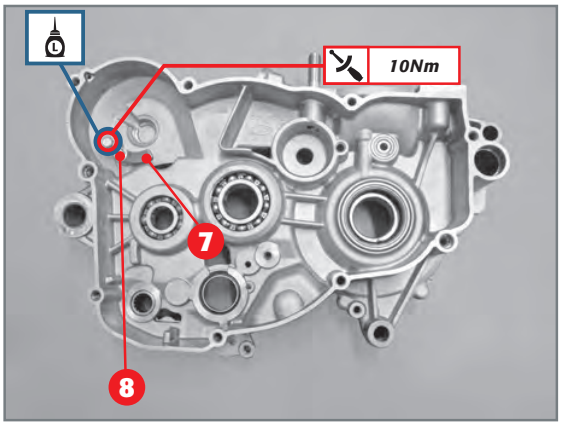

Application of kickstart ramp.

Apply the kickstart ramp **7** and fasten screws **8** at 10Nm, prior depositing of medium strength threadlocker.

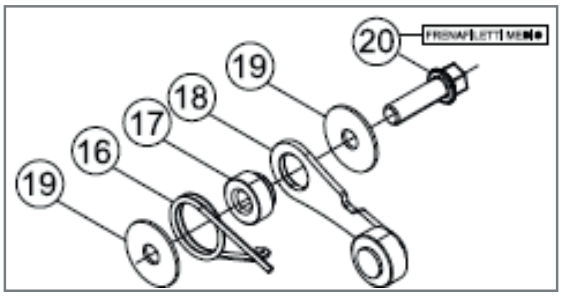

EXPLODED VIEW OF STOPPING DEVICE:

18) Lever;
16) Spring;
17) Spacer;
19) Washer 6x20x1;
20) Screw M6x20

Apply the stopping device as follows.
Keeping the tightener on the lever **18** facing towards the crankcase half, apply the spacer **17** onto it, by inserting the smaller diameter segment in the lever. Apply the spring **16** so that the hook inserts into the groove present on the lever **18** and then apply the washers **19** and the screw **20** M6x20 which threading must be spread with medium strength threadlocker.

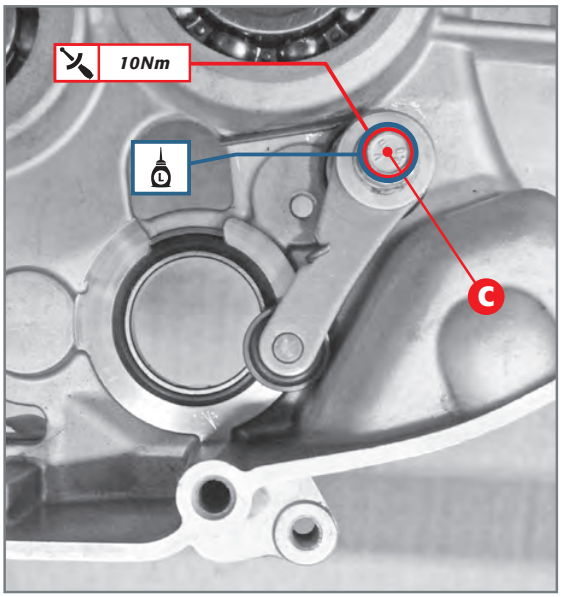

Application of cam stop lever.

Apply the entire device on the crankcase half so that the straight segment of the spring rests on the bearing seat. Tighten the screw at 10Nm.

Downloaded from www.Manualslib.com manuals search engine

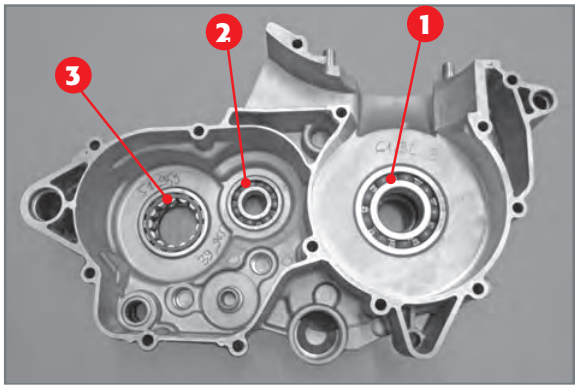

Application of left crankcase half bearings.

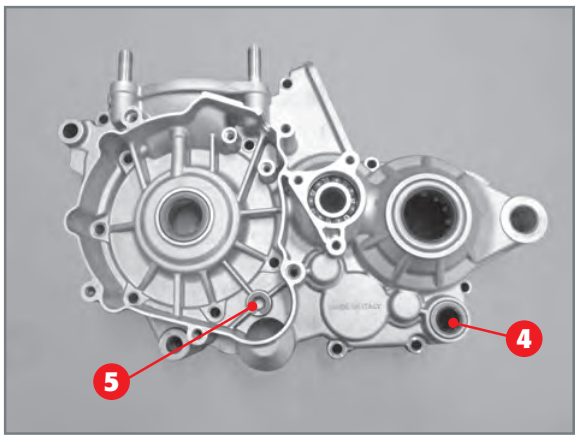

Application of left crankcase half parts.

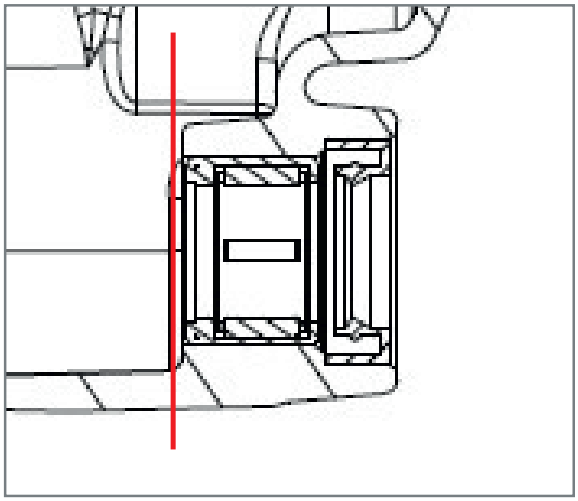

Position of left crankcase half gearshift shaft bearing.

3.1.2 Application of left crankcase half parts

Apply the bearings **1**, **2** and **3** from the crankcase half internal side, until flush.

Apply the bearing **4** from the crankcase half external side, as shown in the drawing.
Apply the crankshaft oil seal, gear secondary shaft and gearshift shaft.
Apply the bush with collar **5**.
Apply new oil seals, to be pressed in seat until they are flush.
Apply new oil seals, to be pressed in seat until they are flush.

Downloaded from www.Manualslib.com manuals search engine

3.2 CHECK OF CONNECTING ROD AND MOTOR SHAFT

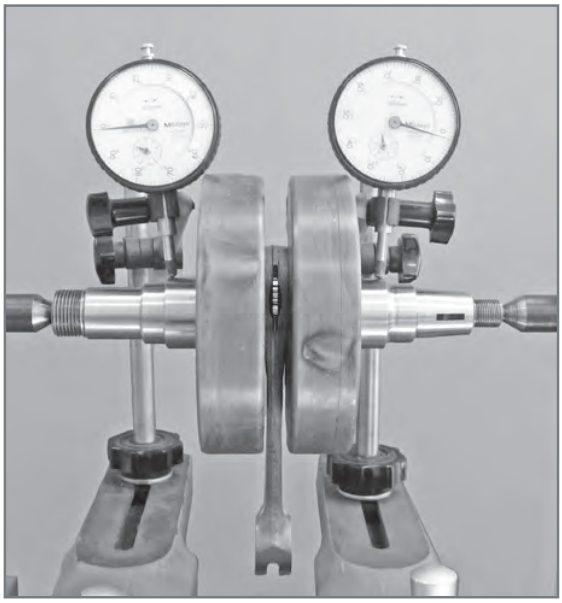

Deflection/Off-centring of crankshaft.

After having checked the state of wear of the coupling surfaces, check the offset of the half shaft axes (by measuring radial oscillation) by placing the crankshaft in between two tailstocks or similar instrument. Control the maximum measurement variation during a complete turn, using comparators positioned on the coupling surfaces with the crankshaft bearings.

Allowed limit value: 0,02mm

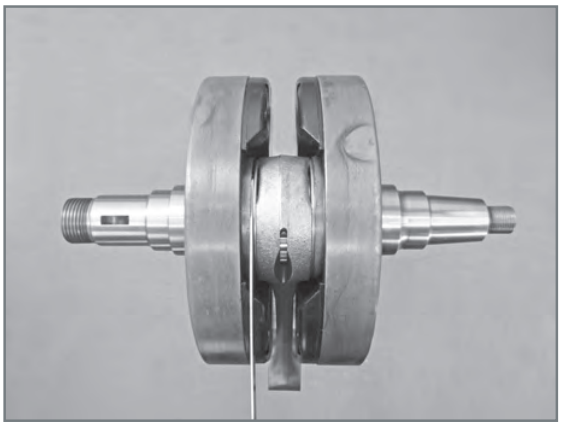

Connecting rod axial play.

Check the axial play between the connecting rod head and the half shafts.

Recommended play:
0,39÷0,72mm

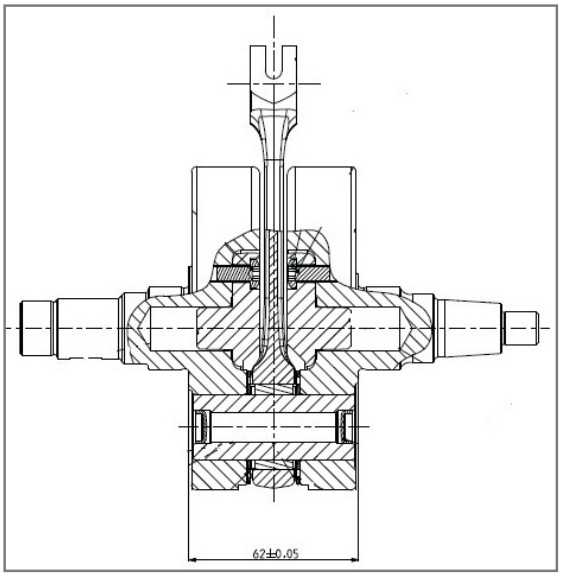

The distance between the two shoulders must be: 62±0,05

Downloaded from www.Manualslib.com manuals search engine

3.3 ASSEMBLING OF COMPLETE CRANKSHAFT

When all the aforementioned checks have been carried out and the worn parts replaced, grease the crankshaft oil seal on the right crankcase half and couple the crankshaft to the left crankcase half. Keep the conical part **A** present on the crankshaft towards yourselves. In order to carry out this operation, you must just push the shaft axially towards the crankcase.
Apply the two centring bushes **1** and **2**.

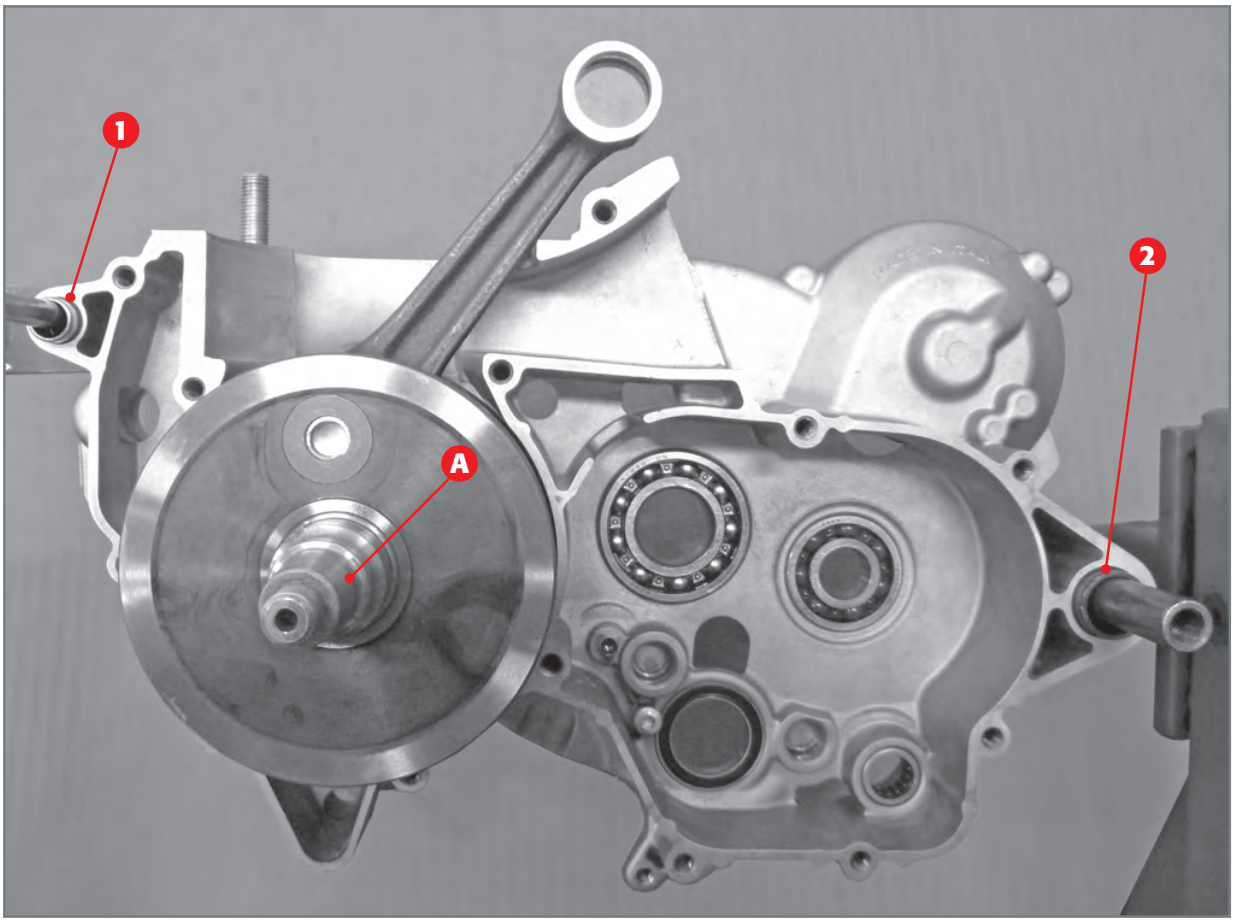

Insertion of crankshaft in right crankcase.

Downloaded from www.Manualslib.com manuals search engine

3.4 GEAR UNIT: CHECKS AND REASSEMBLY

The gearbox unit is made up of the gearshift and of the gearbox itself. The gearshift is then divided into external and internal gearshift.
The following are the verifications and procedures for checking and reassembling these units to the engine.

3.4.1 Check of gearbox unit

Use protective jaws to clamp the primary and secondary shaft.
Use a thickness gauge to check the axial play between the gearshift forks and the gearwheels. The play detected must not exceed the service limit indicated below:

service limit: 0,5mm

If the detected axial play is greater, before replacing either the gearwheels or the forks, check their state of wear (par. 3.4.4).

Remove the various elements and check that:

- the support surfaces of the primary and secondary shafts are free of abnormal wear or signs of seizure;
- the sides of the teeth are free from chipping or abnormal wear;
- the sliding areas of the gearwheels are free from abnormal wear or traces of seizure;
- the front claw clutches of the gearwheels are not chipped or rounded;
- the roller bearings are intact and efficient;
- none of the thrust washers show traces of abnormal wear or meshing.

Should any of these defects present themselves, replace the concerned parts.

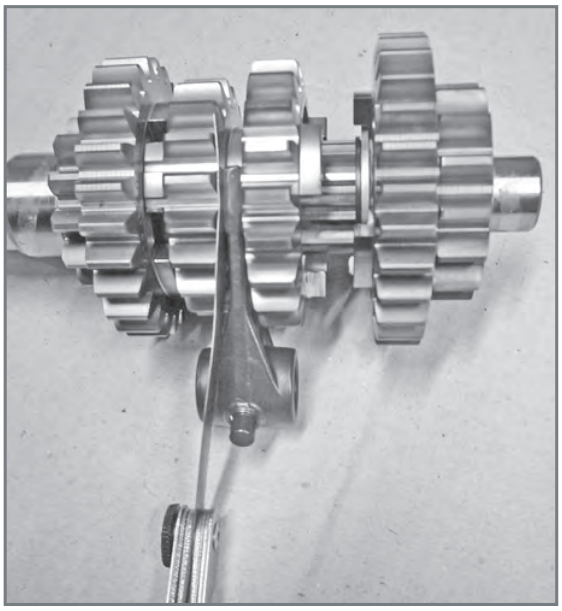

Check of wear of forks and gearwheels.

Downloaded from www.Manualslib.com manuals search engine

3.4.2 Assembly of main unit

Before proceeding with reassembly, clean all the elements thoroughly and oil them with gear oil. Always replace the circlips.
Clamp the main shaft **1** (using protective jaws), so that the grooved end faces downwards.

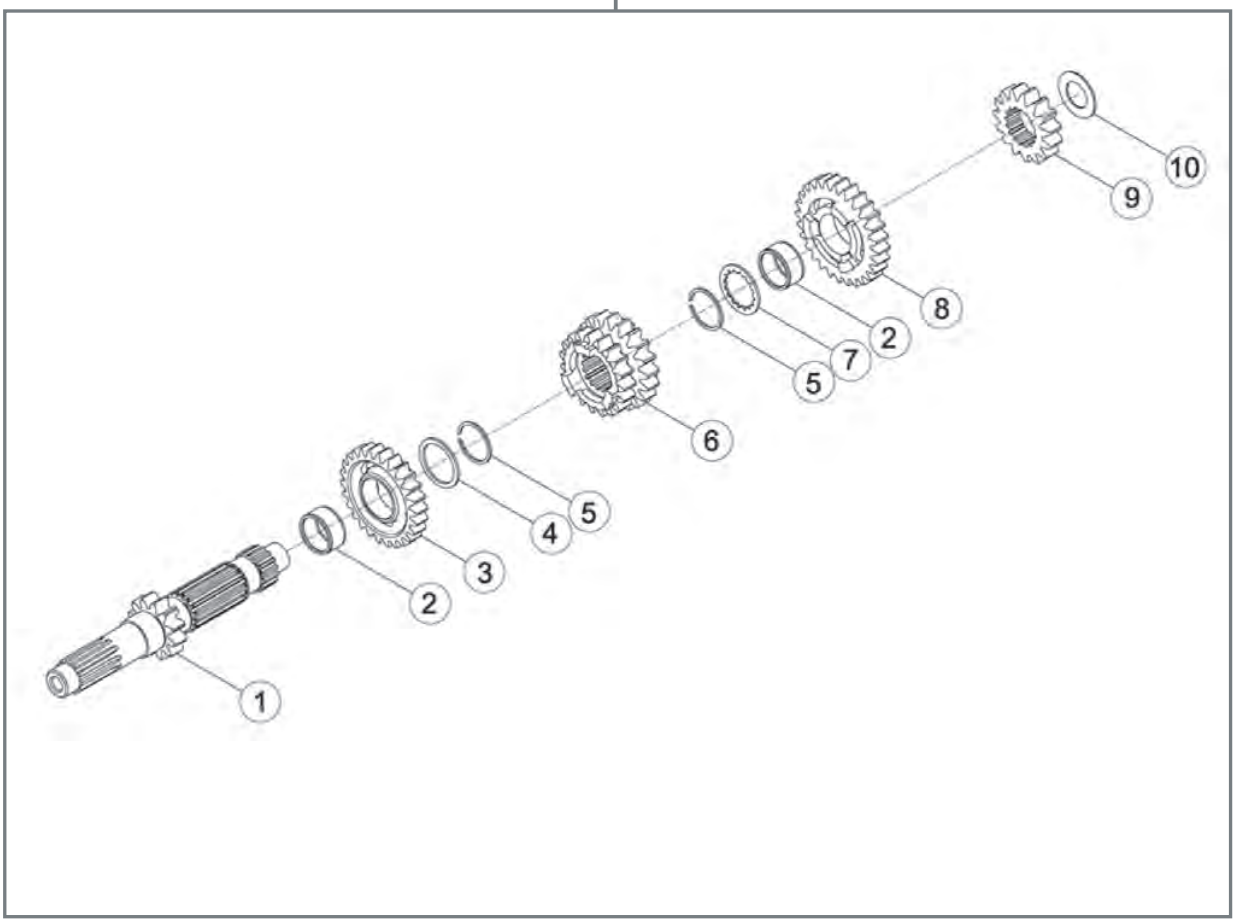

EXPLODED VIEW OF PRIMARY UNIT:

1) Main shaft;
2) Roller cage 22x26x13;
3) Fifth on primary;
4) Thrust washer;
5) Seeger sw15;
6) Third and fourth on primary;
7) Thrust washer;
8) Sixty on primary;
9) Second on primary;
10) Thrust washer 17x30x1

Insert onto the lower cylinder part of the shaft: the roller cage **2**, the 5th gear **3** turning the front claw clutches upwards, the 26x32x1.5 thrust washer **4** and the circlip **5**.
Insert the III – IV sliding gear **6** so that the smaller gear faces downwards, and then insert the circlip **5**.
Insert the 23x32x1.5 thrust washer **7**, the roller cage **2**, the 6th gear **8** with the front claw clutch facing downwards, the 2nd gear **9** with the cavity facing upwards and finally the 17x30x1 thrust washer **10**.

Downloaded from www.Manualslib.com manuals search engine

3.4.3 Assembly of secondary unit

Before proceeding with reassembly, clean all the elements thoroughly and oil them with gear oil. Always replace the circlips.
Clamp the secondary shaft **20** (using protective jaws), so that the grooved end faces downwards.

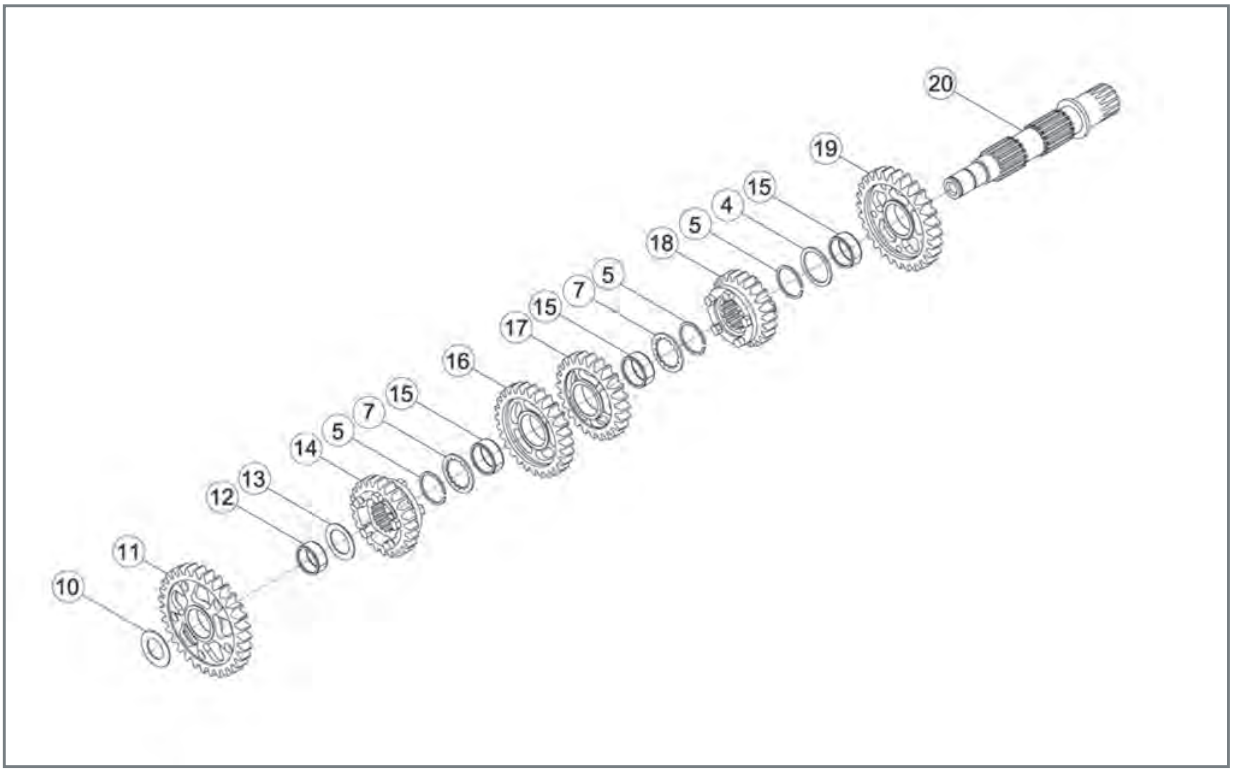

EXPLODED VIEW OF SECONDARY UNIT:

4) Thrust washer;
5) Seeger sw15;
7) Thrust washer;
10) Thrust washer 17x30x1;
11) First on secondary;
12) Roller cage 20x24x10;
13) Thrust washer 20x30x1;
14) Fifth on secondary;
15) Roller cage;
16) Third on secondary;
17) Fourth on secondary;
18) Sixty on secondary;
19) Second on secondary;
20) Secondary shaft

Insert onto the lower cylinder part: the roller cage **15**, the 2nd gear **15** so that the front claw clutches face downwards, the 26x32x1.5 thrust washer **4** and the circlip **5**.
Insert the 6th gear **18** so that the fork seat faces upwards and the circlip **5**.
Insert the 23x32x1.5 thrust washer **7**, the two roller cages **15**, the 4th gear **17** with the front claw clutches facing upwards, the 3rd gear **16** with the front claw clutches facing downwards, the 23x32x1.5 thrust washer **7** and the circlip **5**.
Insert the 5th gear **14** with the fork seat facing downwards the 20x30x1 thrust washer **13** the roller cage **12**, the 1st gear **11** with the front claw clutches facing upwards and finally the 17x30x1 thrust washer **10**.

Downloaded from www.Manualslib.com manuals search engine

3.4.4 Check of forks, fork pins and desmodromic device

The internal gearshift is made up of:

- two forks **13** which drive two gears on the secondary unit;
- one fork **14** which drives one gear on the primary unit;
- three drive pin bushes **15**;
- two fork pins **16**;
- desmodromic gearshift **18** through whose rotation the forks are driven thus selecting the desired gear.

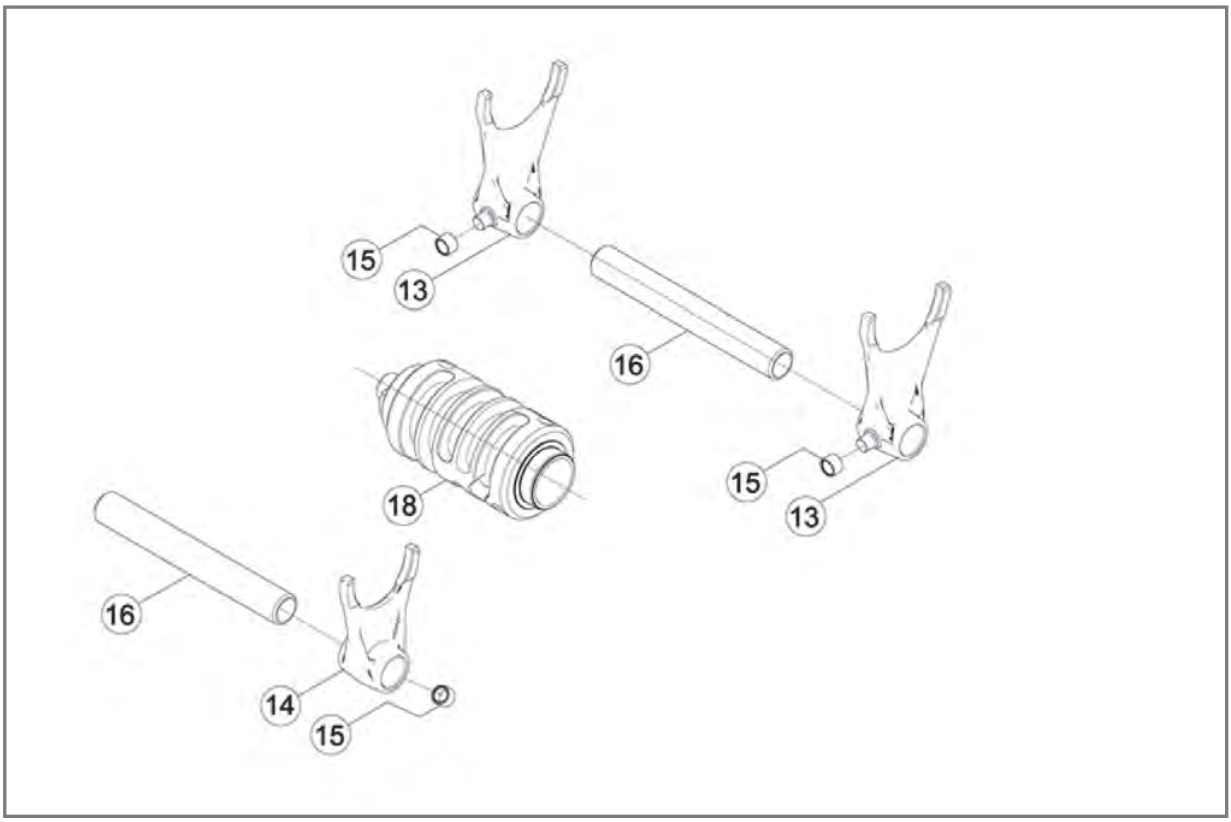

EXPLODED VIEW OF INTERNAL GEARBOX CONTROL UNIT:
13) I - IV fork;
14) V - VI fork;
15) bush;
16) fork pin;
18) desmodromic control

Check to make sure that the drive pins which support the bushes **15** have no traces of meshing or abnormal wear and that the bushes themselves are not worn.

Downloaded from www.Manualslib.com manuals search engine

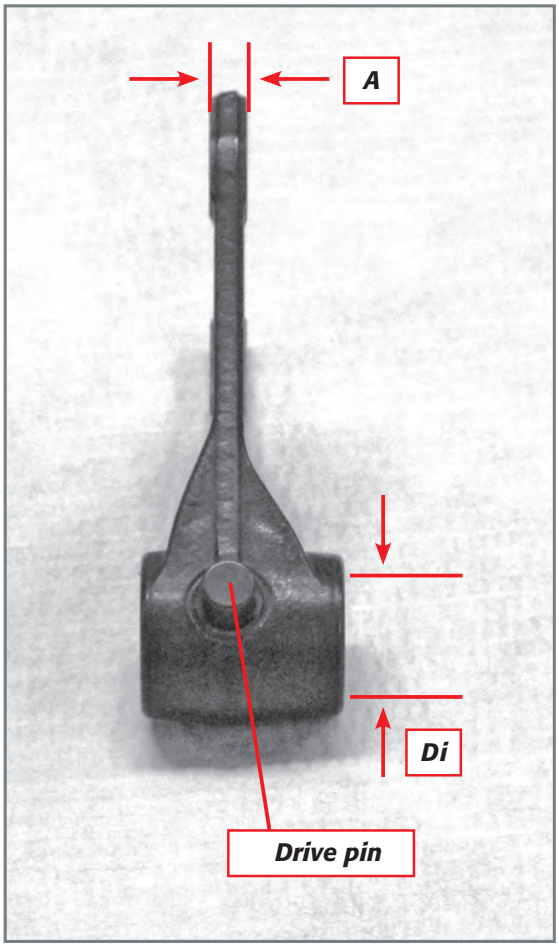

Make sure the distance **A** between the outer faces of the fork is not less than that indicated below:

Minimum acceptable distance: 4,25mm

Check to make sure that the inside diameter D of the fork pin seats is below the limit:

Fork inside diameter limit: 13,83mm

Make sure that the fork pins upon which they slide have an outside diameter above the limit (to be measured in the sliding areas of the forks and in the housing areas of the crankcases):

Fork pin outside diameter limit: 13,75mm

Make sure that the desmodromic control device has no corroded or worn areas especially in the grooves in which the drive pins of the forks are engaged.
Check the bearing on the desmodromic. Replace it in the event of signs of meshing or jams during motion.

Downloaded from www.Manualslib.com manuals search engine

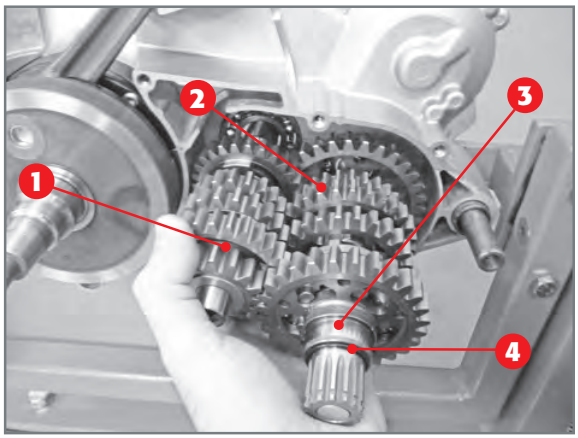

Insertion of gearbox in left crankcase.

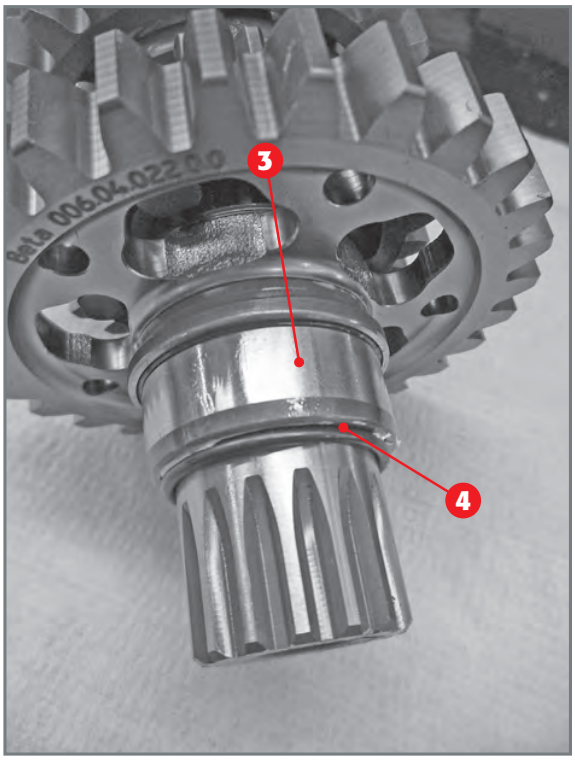

Detail of centre bearing 3 and O-ring 4 coupled to the secondary shaft.

3.4.5 Assembly of gearbox and inner control

Insert the entire primary **1** and secondary unit **2** into the respective seats on the left crankcase half simultaneously. Remember to oil the gears abundantly with gear oil and to grease the shafts supporting them in the areas where they are coupled with the bearing with graphitic grease. Make sure that all the parts slide properly.

Insert the centre bearing **3** and the O-ring **4** on the secondary unit.

Downloaded from www.Manualslib.com manuals search engine

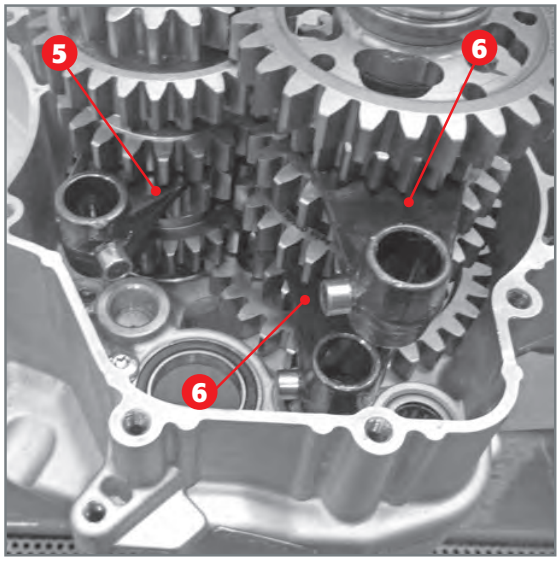

Application of forks to gearwheels.

Introduce the forks together with the drive bushes on the gear tracks. To be precise; the smaller fork **5** drives the sliding gear on the primary unit, while the other two (**6**) drive the sliding gears on the secondary unit.

Note: *the two forks* **6** *are interchangeable and their positioning is univocal, since the drive pin must face the desmodromic device. Place the forks in their original positions if none of the components are replaced.*

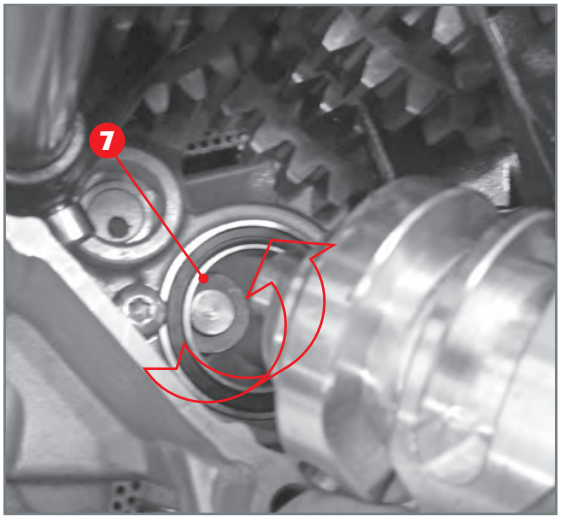

Insertion of desmodromic deice in specific bearing. Note the rotation of the stop lever.

Insert the desmodromic device in the specific bearing. In order to do this, it is necessary to rotate cam stop lever **7** towards the top part of the engine.

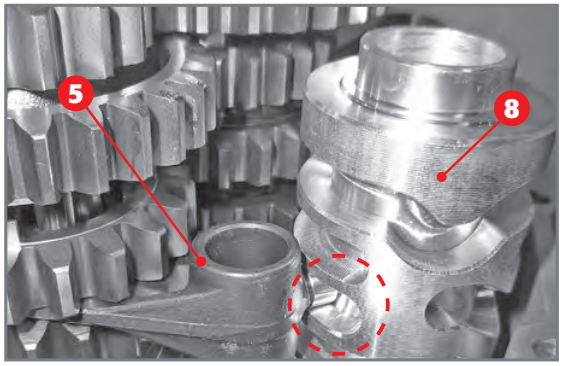

Place fork 5 of the primary unit in the central guide of desmodromic device 8.

Position the fork **5** of the primary unit in the central guide of the desmodromic device **8**, insert the fork pin inside the fork itself and insert the pin in its proper seat in the half-casing.

Downloaded from www.Manualslib.com manuals search engine

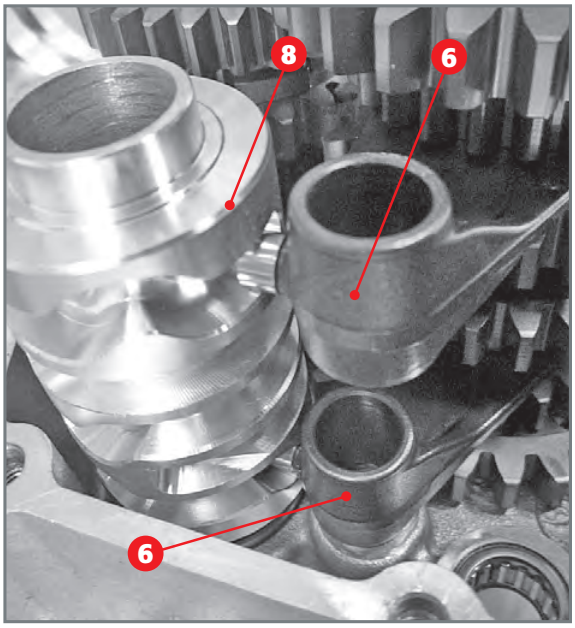

Positioning of the secondary unit forks 6. In the external guides of desmodromic device 8.

Position the two forks **6** of the secondary unit in the external guides of the desmodromic device **8** and, just like the primary unit fork, insert the fork pin first in the pins and then in its proper seat. Remember to oil the shafts, forks and the desmodromic device abundantly with gear oil.

Apply some grease on the crankcase edge in the coupling area with the gasket and rest a new gasket.

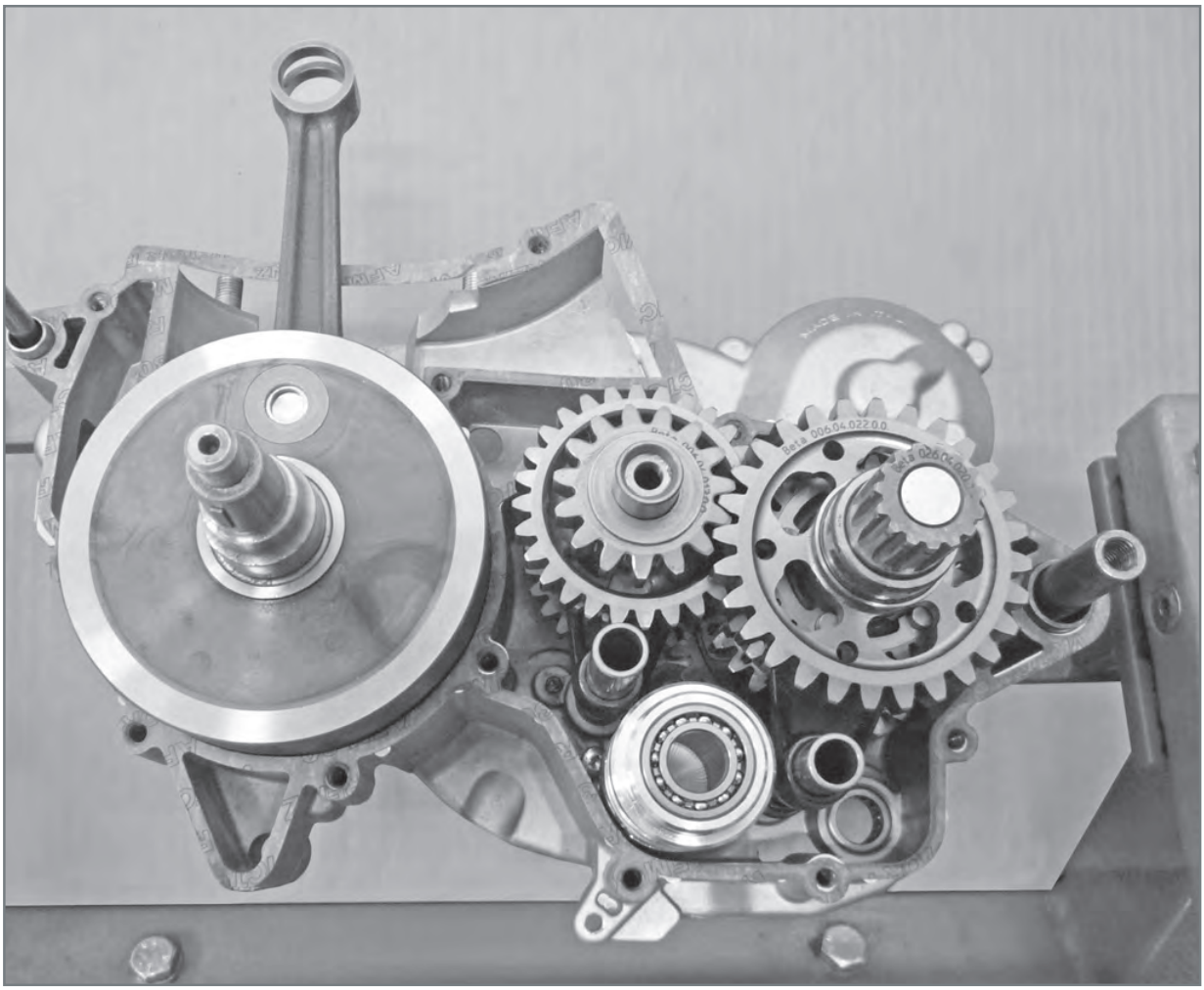

View inside the right crankcase with crankshaft, gearbox shafts complete with wheels, internal gearshift and gasket.

Downloaded from www.Manualslib.com manuals search engine

3.5 CLOSING OF ENGINE CRANKCASE

Apply a thin layer of grease on all oil seals.

Press the right crankcase half towards the left, being careful that the shafts and pins on the crankcase fit into the respective housings and that the crankcase half is not upside-down.

By heating the bearing it will be possible to move it close to the right crankcase half by hand.

Put the clamping screws in place based on the length, as illustrated in the figure.
The table below contains indications for applying these screws.
Tighten according to a cross sequence.

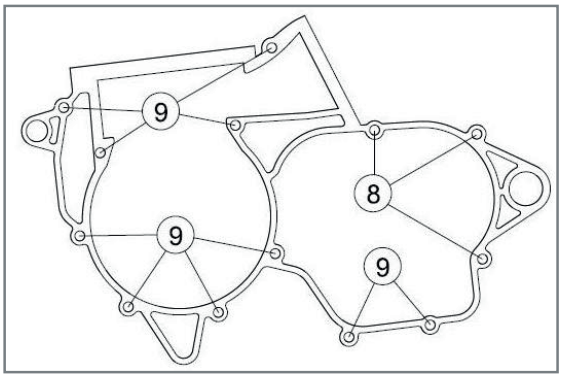

Positioning of screws to couple crankcase.

Screw number	Screw dimensions		Threadlocker application	Tightening torque [Nm]
	Threading length	Threading length		
8	M6	40	NO	10
9	M6	50	NO	10

Cut the extra piece of gasket in between the two crankcase halves in the area of the cylinder and reed valve.

Downloaded from www.Manualslib.com manuals search engine

3.6 EXTERNAL GEARSHIFT

Before reassembling the external gearshift, check its state of use. While for the stop cam it is enough to make sure it's free from abnormal wear or meshing, the gearshift drive shaft needs more in-depth inspections.

3.6.1 Check of complete drive shaft

With the device complete, make sure that the distance between the movable pawl and the drive shaft is between **0.35÷0.80mm**.
Should the distance be greater, replace the movable pawl.

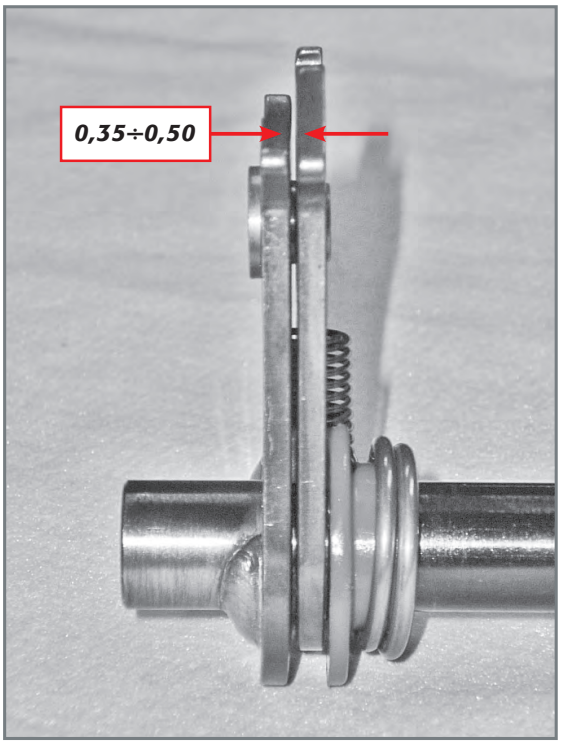

Allowed distance between shaft and pawl.

In order to replace the movable pawl **1**, disassemble the return spring of the gearshift **2**, the spring guide **3**, the spring **4** (which must be compressed and pulled out of its seat) and the pawl, moving it completely towards the shaft **5**.

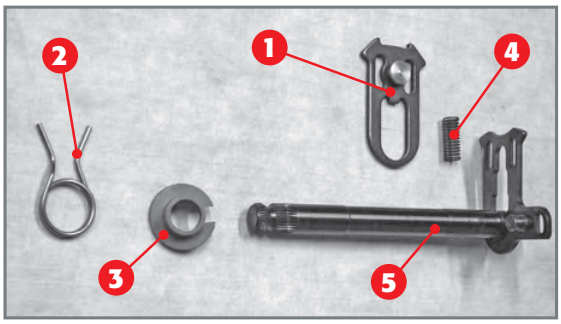

Complete drive shaft: 1) Movable pawl; 2) Gearshift return spring; 3) Spring guide; 4) Spring; 5) Gearshift drive shaft.

Downloaded from www.Manualslib.com manuals search engine

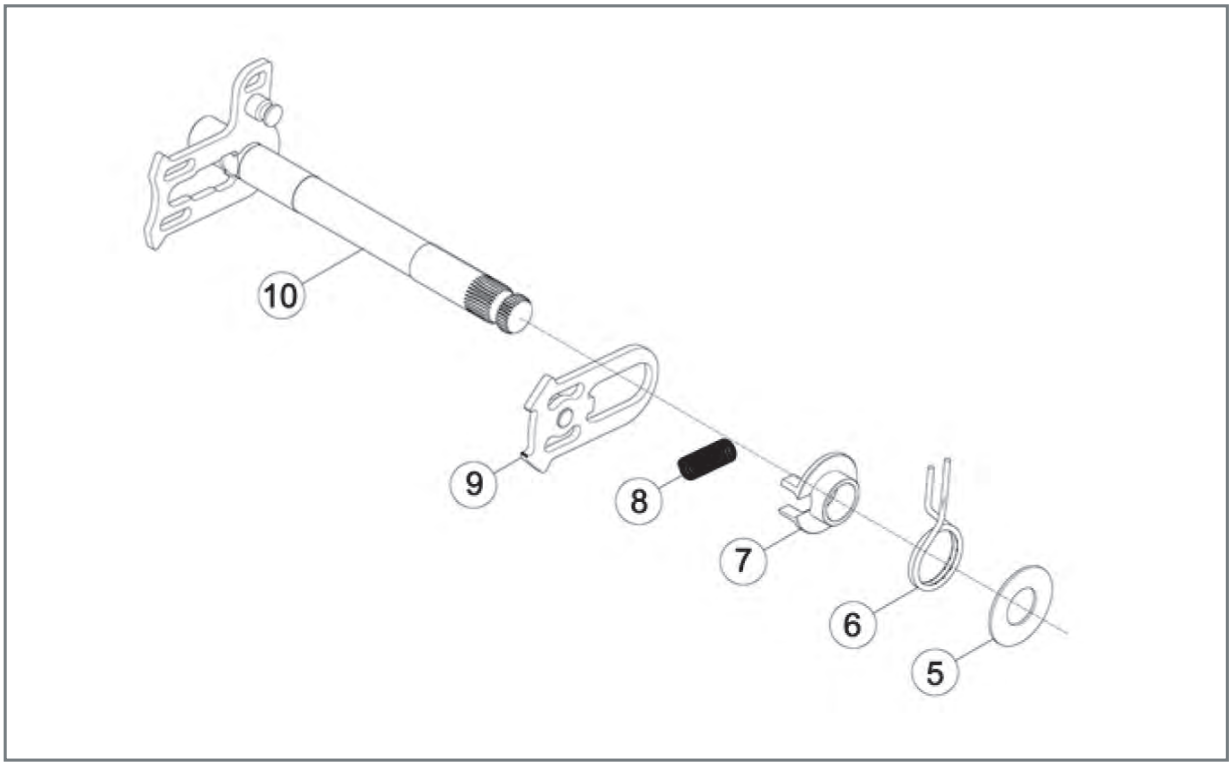

Exploded view of gearshift.
5) Thrust washer 14x30x1;
6) Gearshift return spring;
7) Spring guide;
8) Pawl return spring;
9) Movable pawl;
10) Gearshift shaft.

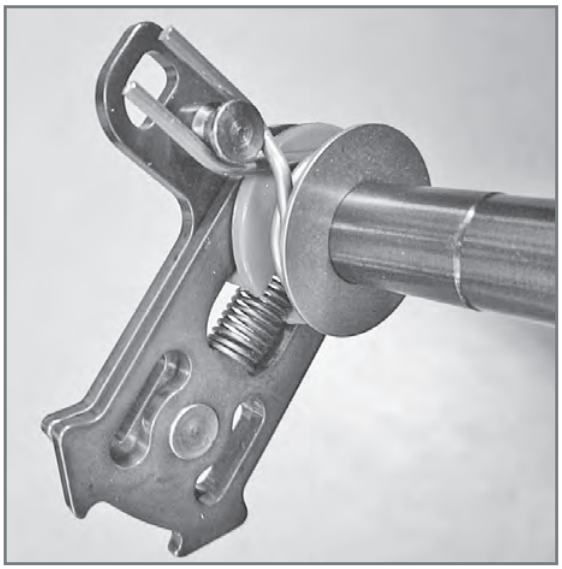

Gearshift drive shaft: note the gearshift return spring position.

For reassembly, couple the movable pawl **9** to the drive shaft **10** and, while compressing it, insert the spring **8** between the movable pawl and the drive shaft. The apply the spring guide **7**, the gearshift return spring **6** and finally the 14x30x1 thrust washer **5**.

The gearshift return spring must be positioned as in the figure to be able to carry out its function.

Downloaded from www.Manualslib.com manuals search engine

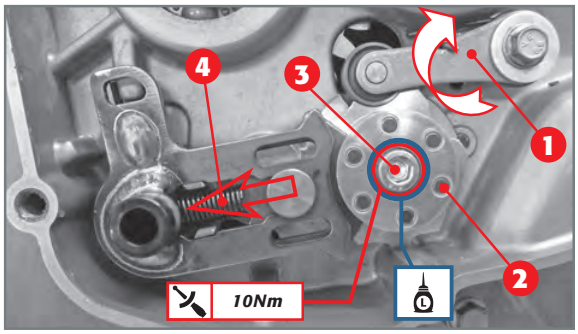

Positioning of external gearshift device components.

3.6.2 Assembly of external gearshift

Keeping the stop lever moved **1** in such a way that the spring is compressed, position the stop cam **2** on the protruding end of the desmodromic control. The stop cam has only one correct position which is determined by the particular shape of the end of the desmodromic device and of the bottom part of the stop cam.
Proceed mounting the tightening screw **3** M6x30 between the stop cam and the desmodromic gearshift, after having applied medium-resistance sealant: fasten at 10Nm.
Insert the drive shaft together with the washer in its seat keeping the return spring **4** of the movable pawl pressed.

Wishing to test the correct functioning of the entire unit, you just need to temporarily couple the external gearshift lever and to simulate the operation of changing gears, by lifting and lowering the gearshift lever and having the main shaft of the gear unit rotate. The whole device works properly if abnormal jamming does not occur.
If the unit runs without oil, the device makes more noise than usual.

3.7 KICK STARTER DEVICE

Before coupling the kickstarter to the crankcase half, some checks must be carried out.

3.7.1 Check of kickstart shaft and assembly

In order to disassemble all the parts of the kickstart shaft, pull off the washer **11** at the end of the shaft (on the side of the spring **16**), the spring **16**, the kickstart sleeve **14**, and the lever return spring **8**, to be unfastened from the shaft must be pulled in the radial direction so that it is extracted from its hole.

Downloaded from www.Manualslib.com manuals search engine

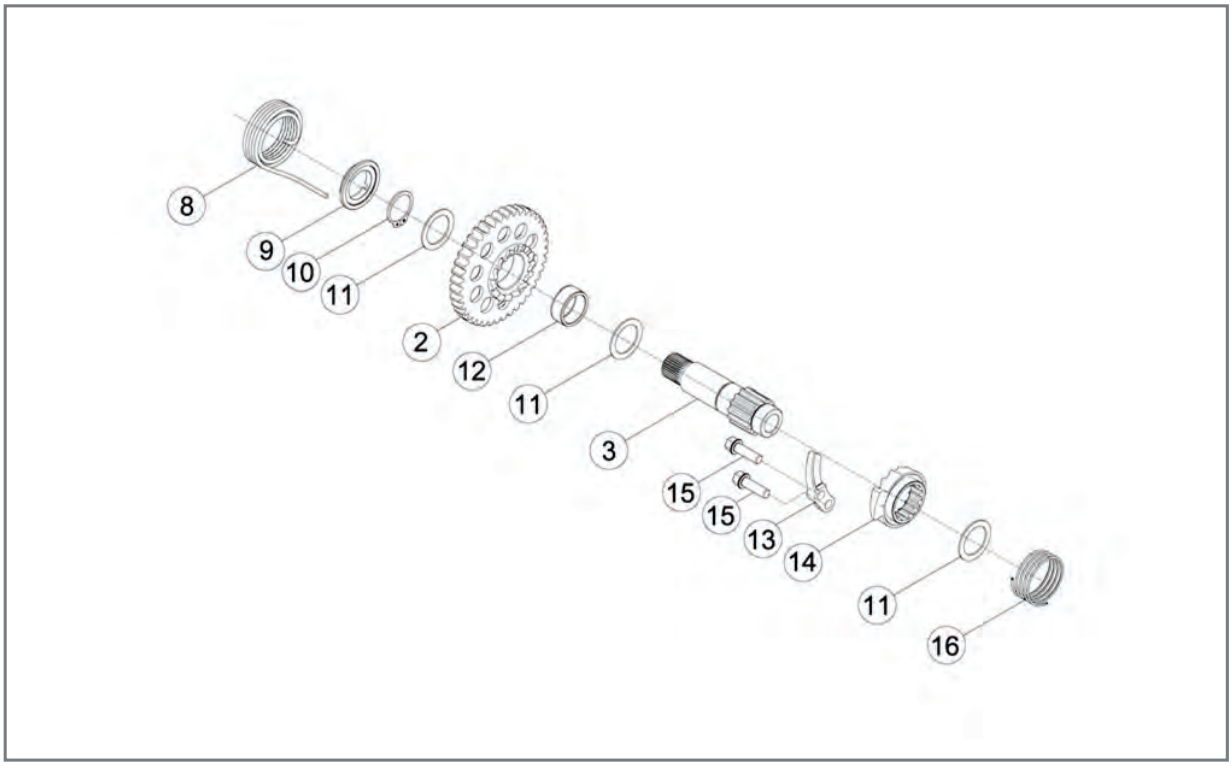

EXPLODED VIEW OF COMPLETE KICKSTART SHAFT:
2) Kickstart gear;
3) Kickstart shaft;
8) Kickstart return spring;
9) Kickstart spacer;
10) Circlip 20E;
11) Washer thickness 20x28x1 DIN 988;
12) Roller bearing K20x24x10;
14) Kickstart sleeve;
16) Spring.

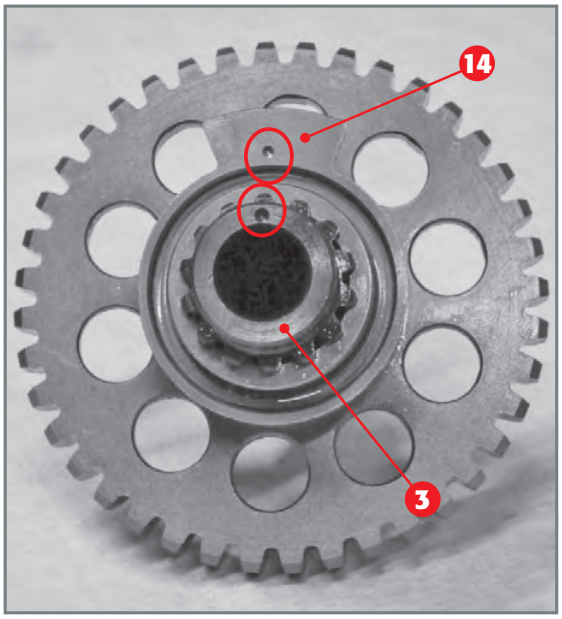

Positioning of sleeve on small shaft.

Remove the kickstart spacer 9, expand the circlip **10**, allowing removal of washer **11**, of kickstart gear **2** together with roller bearing **12** and washer **11**. This frees the kickstart shaft **3** from all other elements.
Make sure that the side of the kickstart gear teeth **2** have no signs of meshing or superficial wear. Make sure that the front teeth (sleeve side **14**) are not chipped. Replace any element that has the aforementioned defects.
Make sure that the front teeth of the sleeve **14** are not chipped and that the spring **16** is capable of putting enough pressure on the sleeve **14** so that this can to pull the wheel **2**.
Also check to make sure that the washers have no abnormal or excessive wear. If so, have them replaced. Make sure that the spring **8** has no cracks or abnormal deformation. Have it replaced if it is not able to bring the external kickstart lever back to the rest position.
For reassembly, proceed inversely compared to the previously-described disassembly procedures. Pay attention to the correct positioning of the sleeve **14** respect to the shaft **3**. The front of the shaft has a reference sign, just as the sleeve does **14**: the two references must match.

Downloaded from www.Manualslib.com manuals search engine

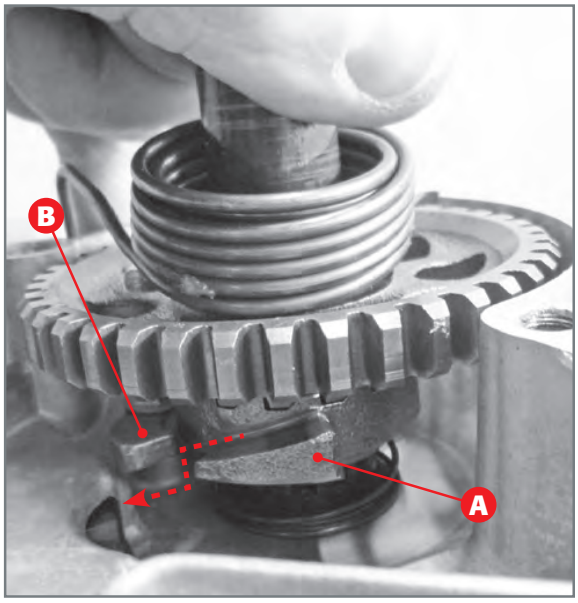

Positioning of sleeve A below ramp B.

3.7.2 Assembly of kickstart device

Insert the complete kickstart shaft in its housing keeping the thin-striped facing outwards and making sure that the ramp **A** on the kickstart sleeve is positioned below the ramp **B** bolted onto the right crankcase half (external side).

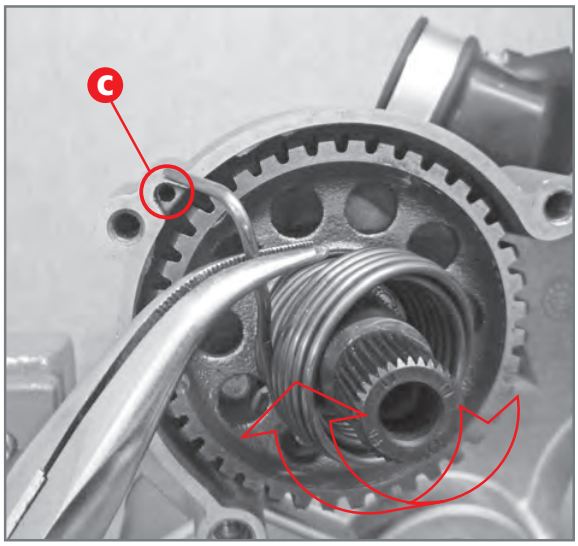

Insertion of kickstart return spring.

Turn the spring clockwise until it fits into the specific hole **C**.

Downloaded from www.Manualslib.com manuals search engine

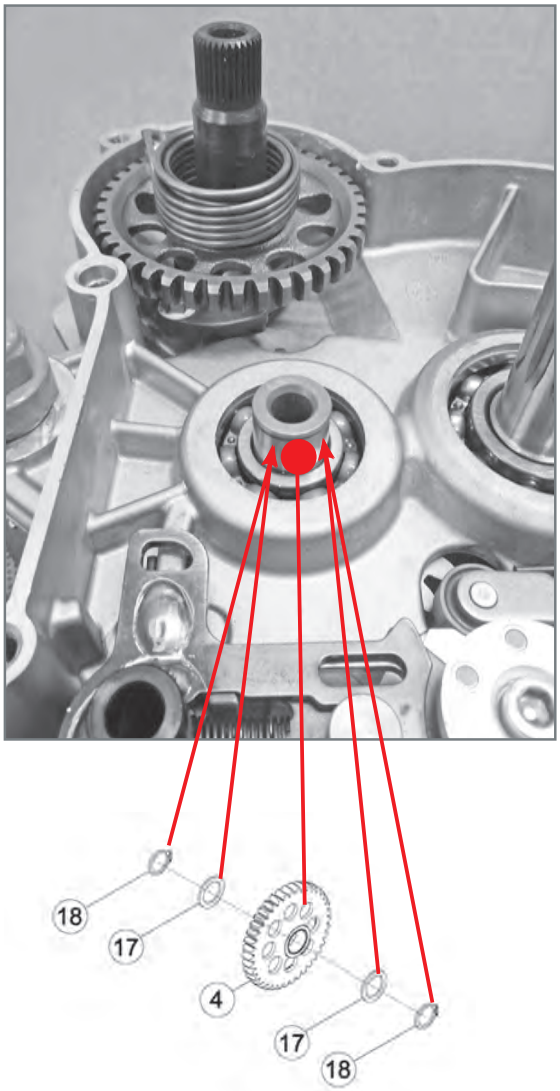

Kickstart device unit coupled to the crankcase.

Insert in the slot on the protruding segment of the secondary shaft: the circlip **18**, the washer **17**, the idler wheel **4** followed by the washer **17** and the circlip **18** as shown in the figure.

Downloaded from www.Manualslib.com manuals search engine

3.8 MAIN GEAR AND CLUTCH UNIT

Before reassembling the clutch unit, carry out some checks on the various components described below.

3.8.1 CHECK OF MAIN GEAR

Check teeth of main gear is without nicks or abnormal wear. On the contrary, replace it.

3.8.2 APPLICATION OF MAIN GEAR

Apply the O-ring **18**, the spacer **12** and gear **14** on the right half shaft so the appropriate groove inserts inside the Woodruff key **17**. Apply lock nut **15** prior depositing of medium strength threadlocker. Fastening torque must be at 160Nm.

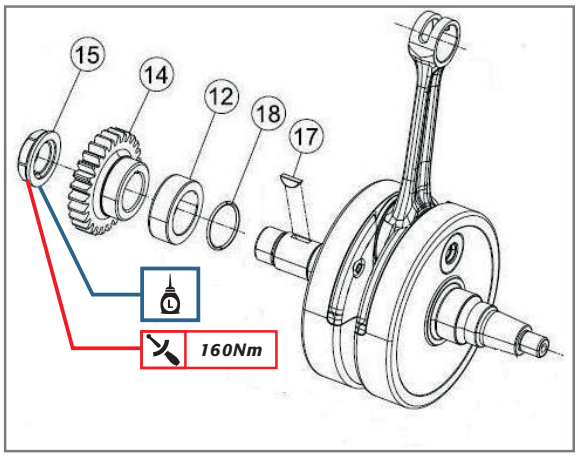

Exploded view of pinion unit.

This is possible once the clutch case is inserted using primary special tool **A** *(code 026140010 000)*. See Par. 3.8.3 to apply the clutch case.

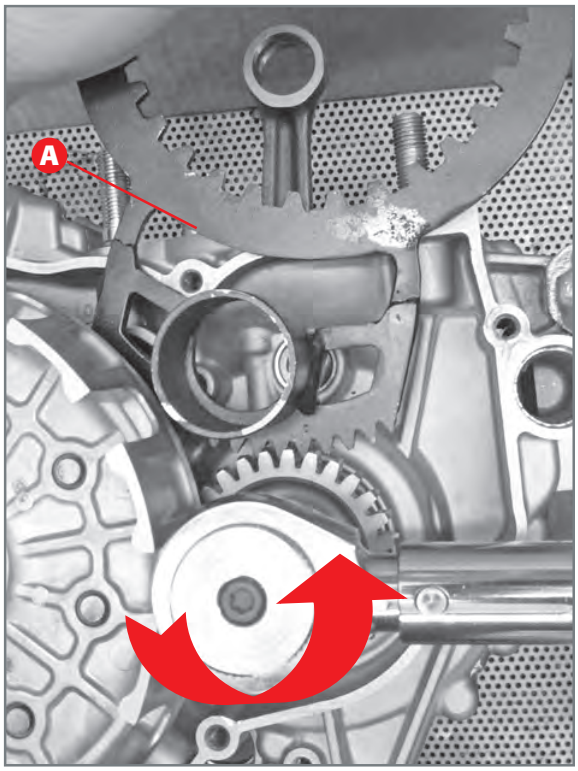

Fastening of the main gear nut.

Attention! *The nut is fastened anti-clockwise*

Downloaded from www.Manualslib.com manuals search engine

3.8.3 Check of clutch case, roller bearing and internal centre bearing

Before reassembling the clutch case, make sure that the sides of the teeth **A**, dedicated to main transmission and **B**, dedicated to meshing with the kickstart idler gear and oil pumps, have no superficial nicks or abnormal wear.
Also closely check that the teeth **C**, upon which the driving discs engage, are not chipped or deeply cut.
Check the external surface **D** does not show traces of meshing or abnormal wear.
If any damage is found, have the piece replaced.

CLUTCH CASE:
A. Teeth meshing with main gear;
B. Teeth meshing with kickstart idler gear;
C. Teeth meshing with driving discs;
D. External washer.

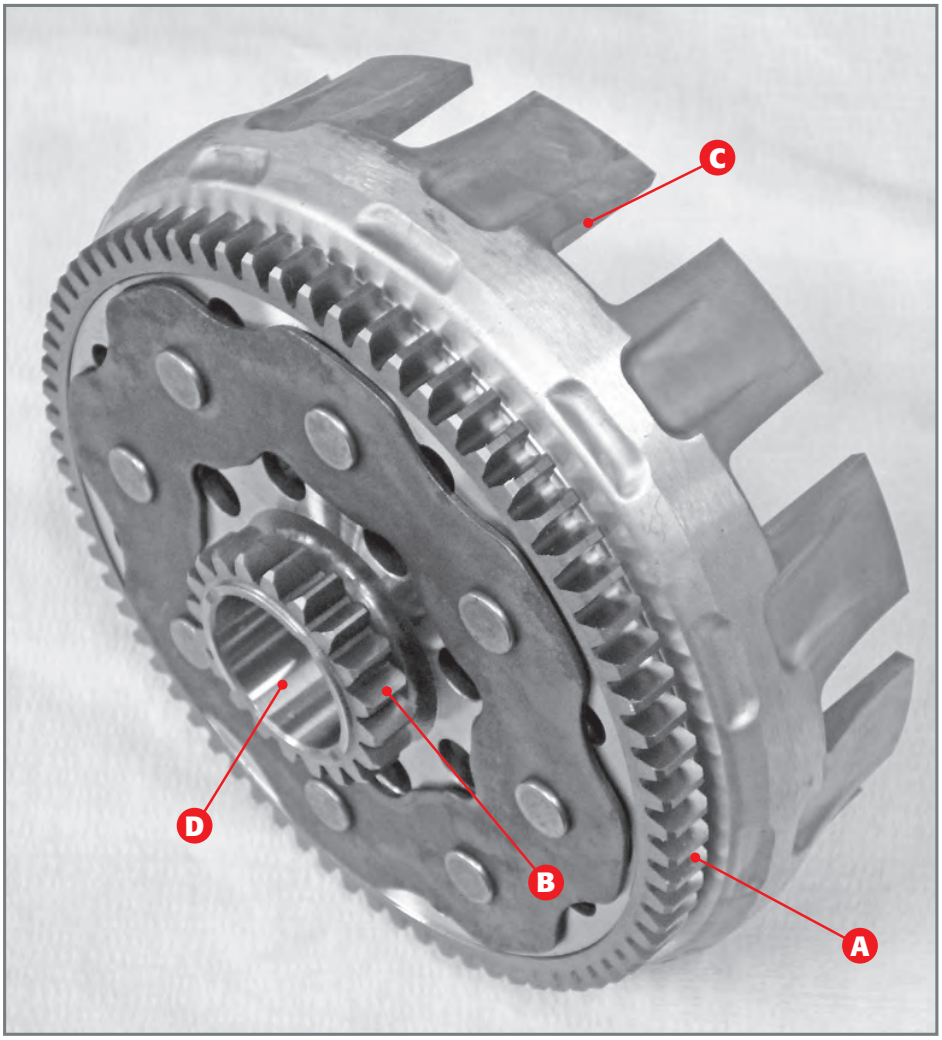

Downloaded from www.Manualslib.com manuals search engine

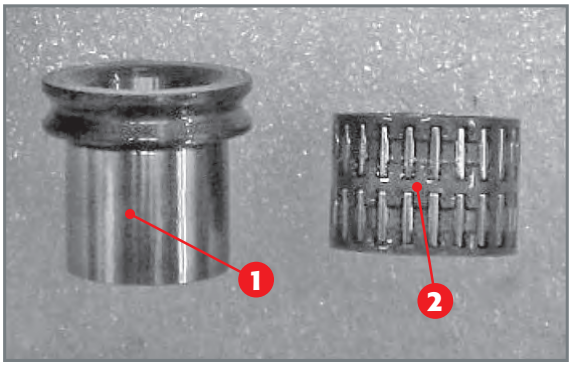

Internal centre bearing and roller bearing of clutch case.

Check the state of use of the silent-blocks as follows. Clamp gear **B** using protective elements and impose a rotation to the clutch case. If there is play between the case and the gear unit, replace the silent-block.
Check the state of use of the internal centre bearing **1** which must have no traces of meshing or abnormal wear.
Check the state of use of the roller bearing **2**. If it is worn, have it replaced.

3.8.4 Check of clutch discs

The clutch discs divide in driving and driven: eight driving discs and seven driven discs.
The driving discs have cork inserts on both sides which wear out due to the driven discs sliding on them.
Make sure that the thickness between the two inserts positioned on the opposite faces of each driving disc is not below the minimum value fixed at:

minimum distance between two opposite inserts: 2,8mm

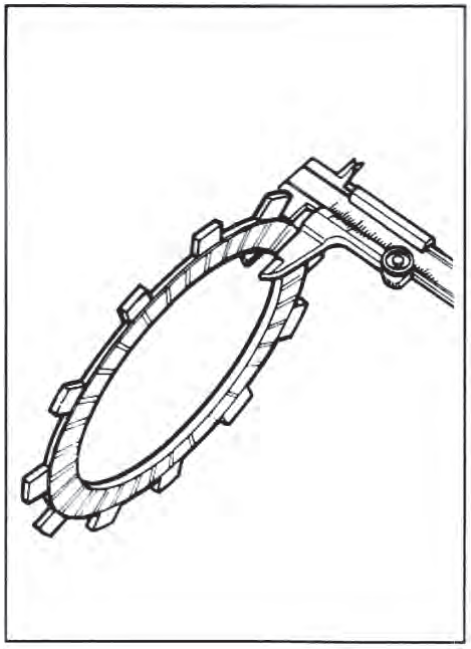

Minimum distance between two opposite inserts.

The other value that needs to be checked is the thickness of the teeth of each driving disc. They must not be less than the minimum value fixed at:

minimum driving disc tooth thickness: 13,3mm

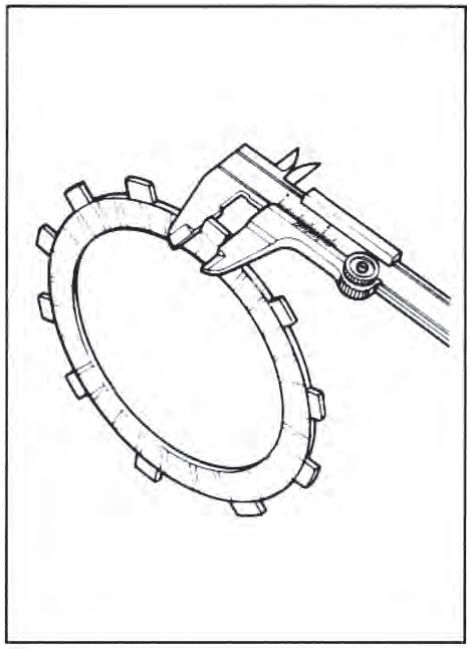

Minimum driving disc tooth thickness.

Downloaded from www.Manualslib.com manuals search engine

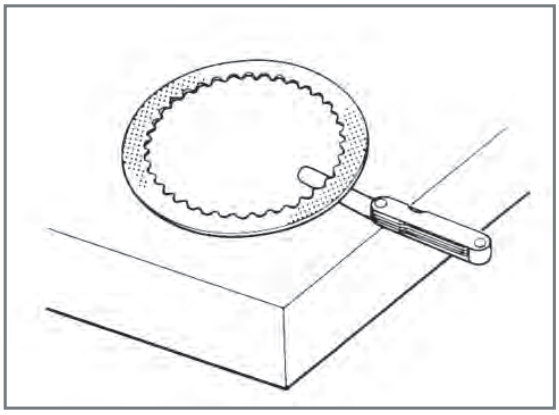

Measuring driven disc distortion.

Also check the distortion of the driving discs. This operation is done by placing the driving discs on a perfectly flat surface and using a thickness gauge to check that the gap between the disc and the surface is not greater than:

allowable distortion
driven discs: 0,10mm

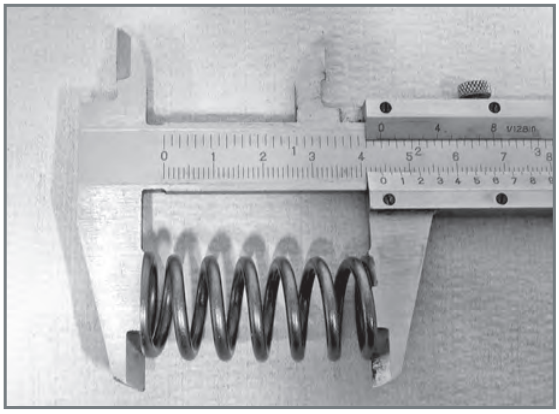

Clutch spring length measurement.

3.8.5 Check of springs

To ensure the correct pressure between the clutch discs, the state of the springs must be checked. The minimum acceptable length must be: **42mm**

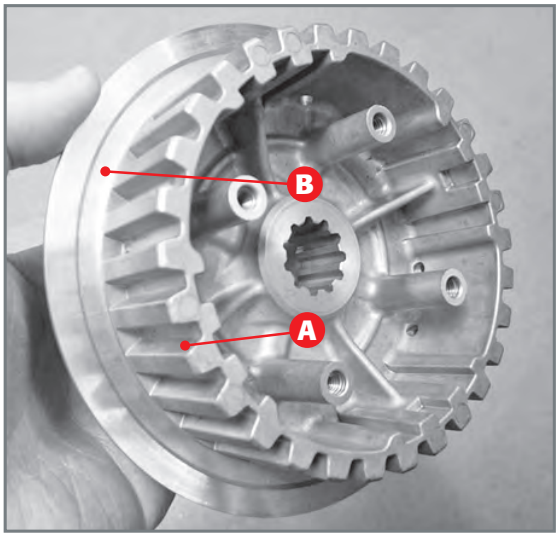

Check of clutch drum teeth.

3.8.6 Check of clutch drum

The clutch drum meshes with the driven clutch discs by means of the teeth **a**: Make sure these teeth are not meshed or shaped by abnormal wear. If so, replace the drum.
Make sure that the seat **B** where the support washer of the disc spring slides shows no traces of meshing. If so, replace the drum.
Also control that the radial holes present on the clutch drum are not obstructed and are free from sediments.

Downloaded from www.Manualslib.com manuals search engine

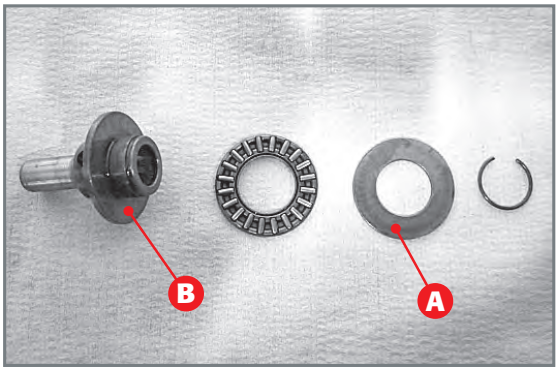

Thrust bearing device.

3.8.7 Check of thrust bearing device

Check the state of use of the thrust bearing and the surfaces upon which it rests. In order to check the thrusting bearing, just see if it slides. When the device is assembled, simulate rotation of the front centre bearing **A** respect to the rear one **B**. Be careful for presence of traces of meshing or wear on the sliding surfaces.

3.8.8 ASSEMBLY OF CLUTCH UNIT

After having lubricated the end of the main transmission shaft, insert the internal centre bearing **4** to which the roller bearing must be coupled **5**. Insert the clutch case **1** followed by the 21.7x38x3 washer **6**, upon which the clutch drum will rest **2**. Put on the safety washer **7** and after having applied medium strength threadlocker, couple the lock nut **8**. Slightly rotate the kickstart idler gear and the clutch case to facilitate inserting the clutch case.

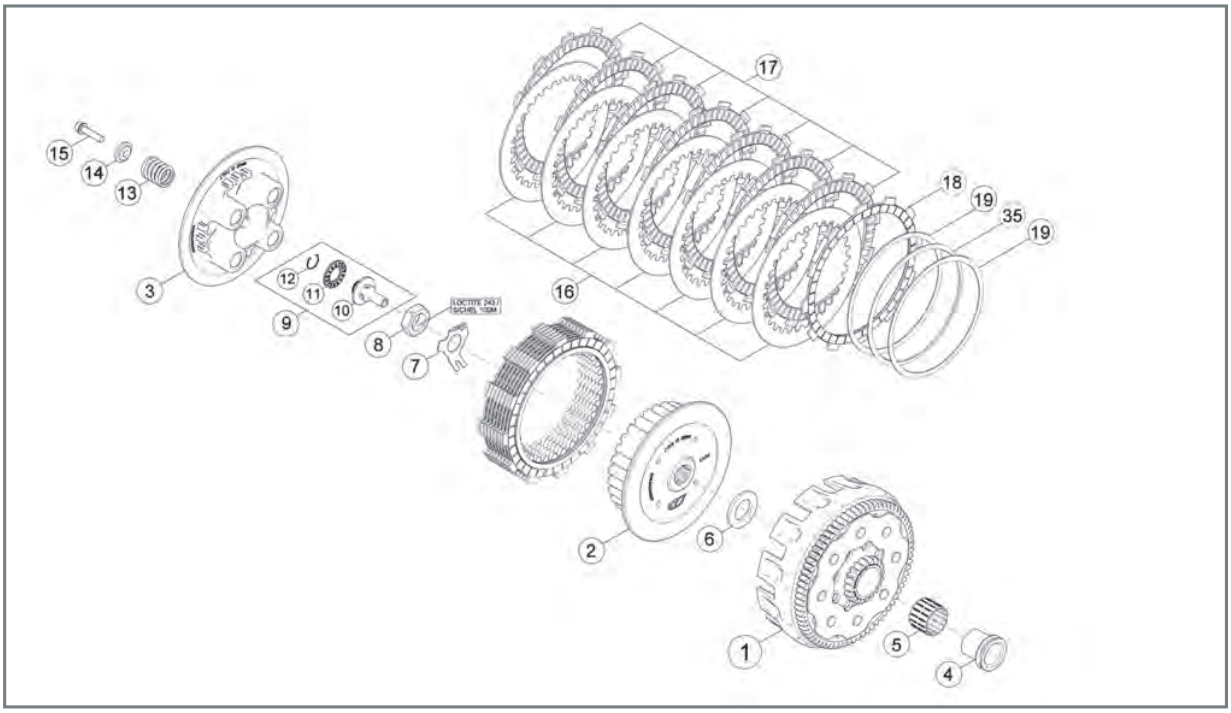

EXPLODED VIEW OF CLUTCH UNIT.
1) Complete case; 2) Clutch drum; 3) Clutch cap; 4) Internal centre bearing; 5) Roller bearing 26x30x22; 6) Washer; 7) Safety washer; 8) Nut M18x1,5; 9) Overall thrust bearing; 10) Clutch body rod coupling; 11) Thrust bearing; 12) Circlip RB14; 13) Clutch spring; 14) Clutch spring retainer; 15) Screw M6x25; 16) Driven discs; 17) Driving discs; 18) Special driving disc; 19) Washer; 35) Disc spring.

Downloaded from www.Manualslib.com manuals search engine

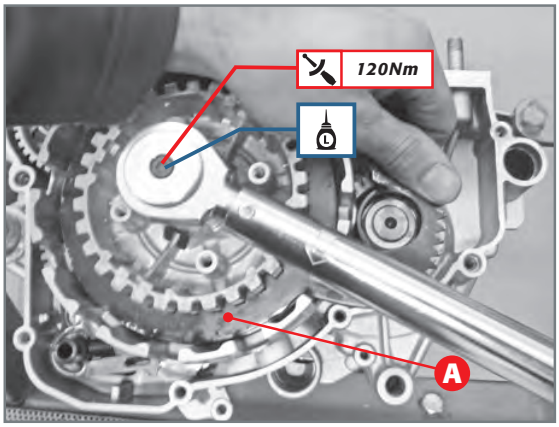

Clutch drum blocking by means of specific tool Code 026140010 000.

Fasten the nut **8** by keeping the clutch drum blocked by means of tool **A** (*code 026140010 000*); the fastening torque is set at 120Nm.
Having tightened the nut, bend the two blocking flaps on the safety plate.

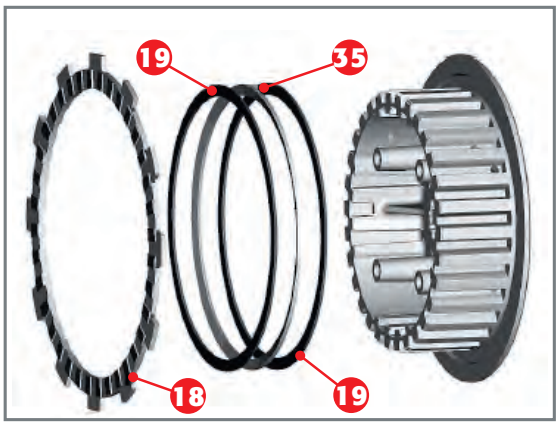

Assembly order of disc spring unit.

Lubricate the clutch disc with gearbox oil and apply the washer **19** in the seat on the drum, the disc spring **35** so that the concave part faces the washer **19**, the washer **19**, the special disc **18**, a driven disc and then the other discs alternating a driving disc and a driven disc.

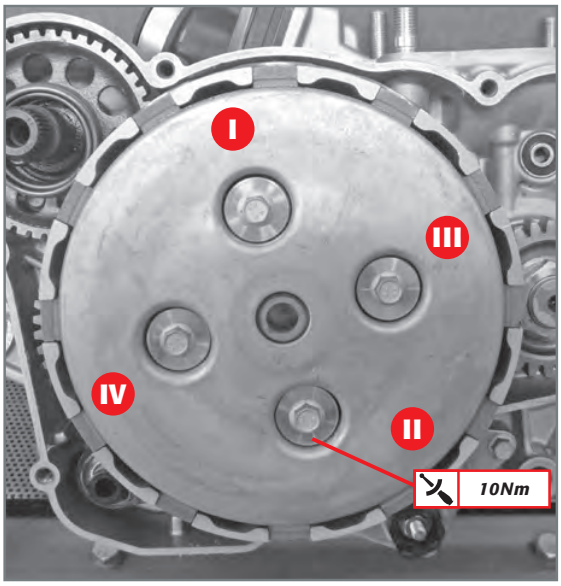

Complete clutch and recommended fastening order.

Notice that the driven discs must be inserted so that the radius on the teeth faces inwards towards the engine.
Insert the overall thrust bearing **9** (after having lubricated it with transmission oil) in the hole on the main transmission shaft and check its free axial sliding.
Close the clutch unit by means of the clutch cap **3**, the four springs **13**, the fours spring retainers **14** and the four screws **15**, to be tightened with a torque of 10Nm, in a criss-cross pattern.

Downloaded from www.Manualslib.com manuals search engine

3.9 COOLANT LIQUID PUMP AND CENTRIFUGAL UNIT

The water pump must guarantee, depending on the set rotation speed, the correct flow rate of the coolant in order to extract the needed amount of heat from the thermal unit. The centrifugal unit activates the whole exhaust valve control leverage based on the engine rotation speed, while springs **6** and **7** give the correct contrast to the centrifugal action caused by **20**, in order to guarantee excellent supply of torque and power.
Impeller **11** is fastened to shaft **20** and coupling is ensured by tightening nut **3** on shaft **20**.
The centrifugal unit **20** shaft is supported by bearing **34** present on the internal clutch cover and by bearing **33** on the external side right crankcase half. Seal is guaranteed by oil seal **35**.

EXPLODED VIEW OF CENTRIFUGAL UNIT AND WATER PUMP UNIT
1) Rocker arm;
2) 5x15x2;
3) Screw M5x12;
4) Complete valve control rod;
5) Spring guide;
6) Auxiliary spring;
7) Adjusting spring;
8) Washer 10x16x1;
9) Roller bush;
10) Centrifugal control lever;
11) Water pump impeller;
12) Water pump washer;
15) Complete centrifugal unit;
16) Roller axle cage;
17) Centre bearing;
18) Spacer;
19) Circlip;
20) Complete centrifugal shaft;
32) Ball joint retainer ring;
33) Bearing 6x19x6;
34) Bearing 15x32x9;
35) Oil seal

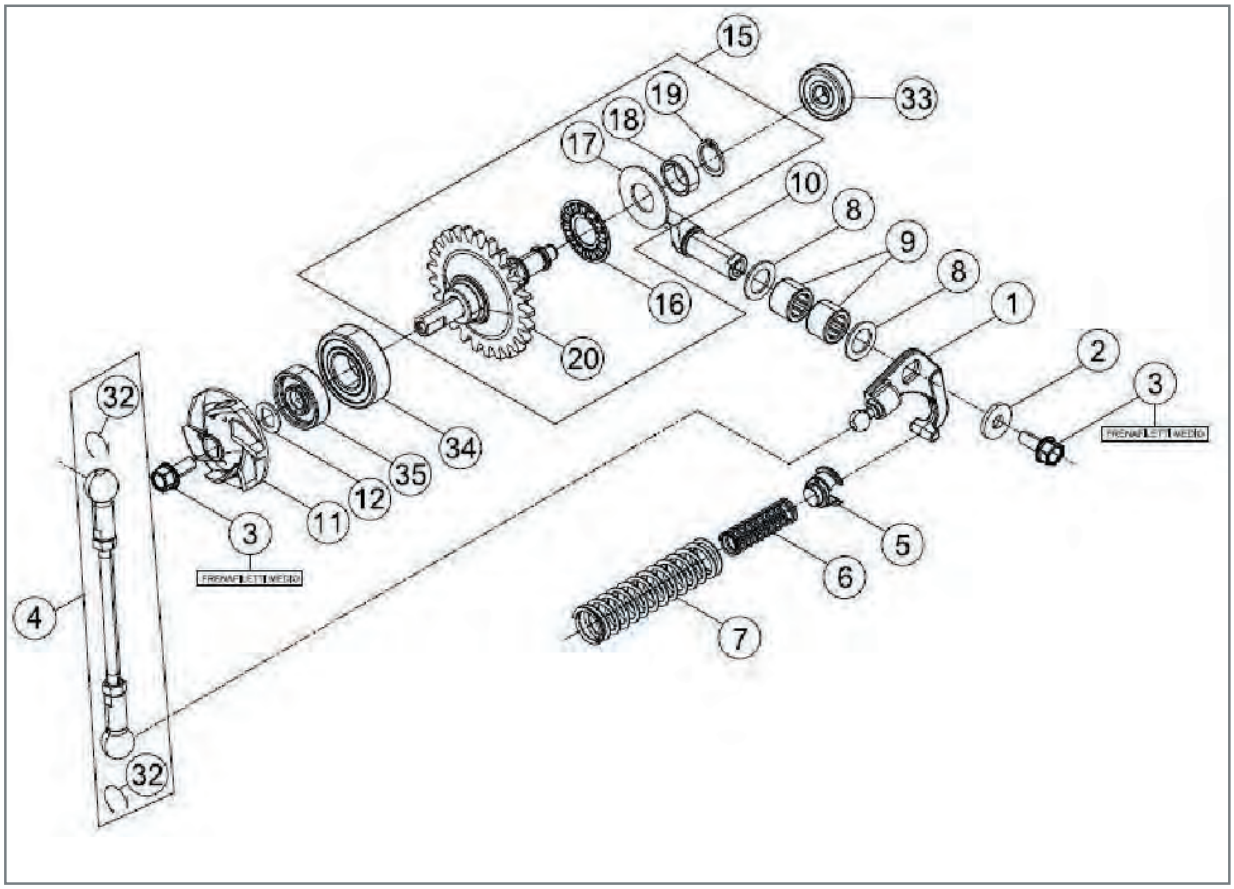

Downloaded from www.Manualslib.com manuals search engine

3.9.1 Check of pump unit and disassembly, centrifugal unit and idler unit

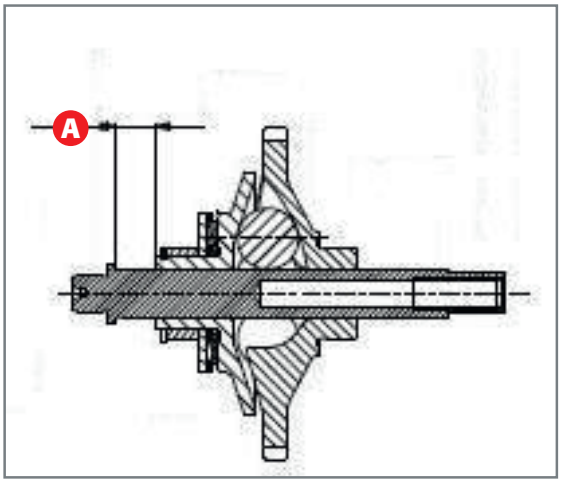

View in centrifugal unit section: stroke A.

Refer to par. 2.6.1 to disassemble the entire pump unit.
Check oil seal use status. Replace if worn.

Check centrifugal unit shaft use status. Replace the entire centrifugal unit if dented in the area in contact with the oil seal.
Check the device's axial stroke **A** is between 6.4-6.6mm.

On the contrary, replace the unit.

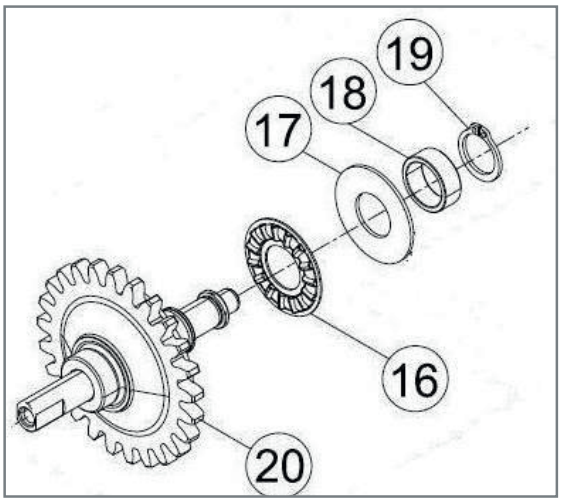

Exploded view of centrifugal unit.

Remove circlip **19** and check use status of the roller axial cage **16**. Replace it in case of anomalies.

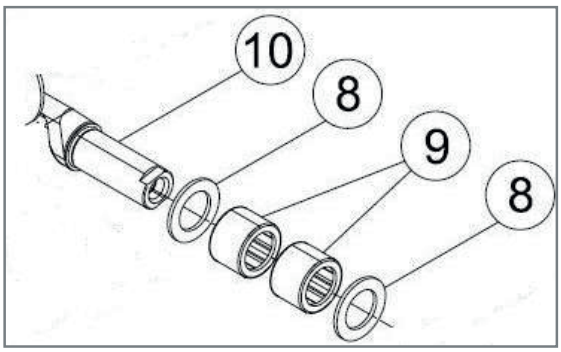

Exploded view of bearings and centrifugal control lever.

Check the roller bushes **9** do not jam during their operation and check the centrifugal control lever **10** moves correctly.

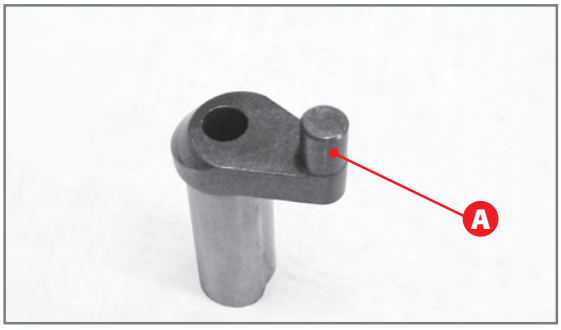

Check of centrifugal control lever A area.

Also check area **A** of lever **10** is not worn.

Downloaded from www.Manualslib.com manuals search engine

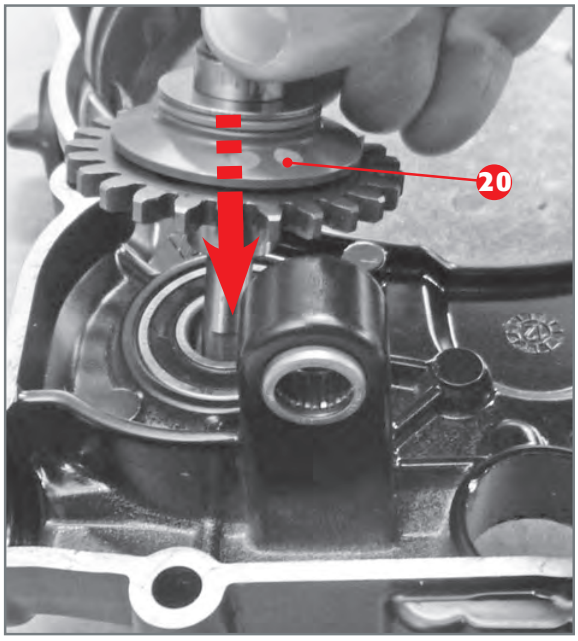

Insertion of centrifugal.

3.9.2 Assembly of centrifugal unit

Insert the centrifugal unit **20** in inner clutch cover.

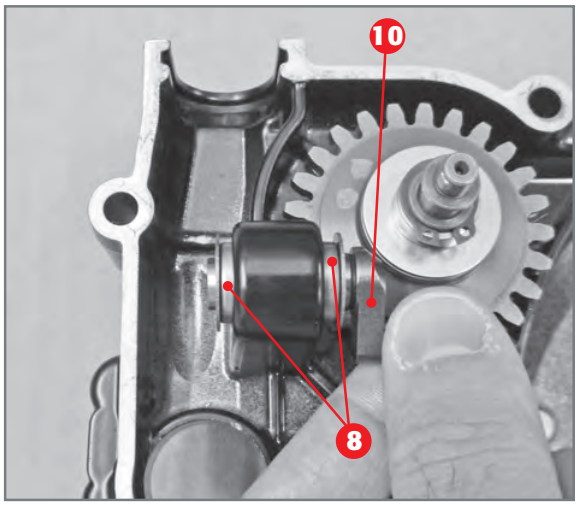

Insertion of centrifugal control lever.

Insert the centrifugal control lever **10** together with the washers **8.**

Downloaded from www.Manualslib.com manuals search engine

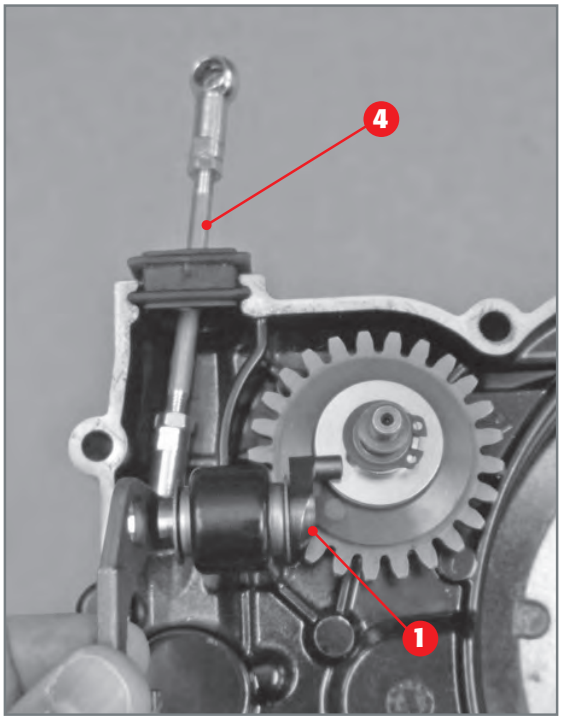

Application of valve control and rocker arm unit.

Apply the valve control rod gasket and the rocker arm unit **1** - valve control rod **4**.

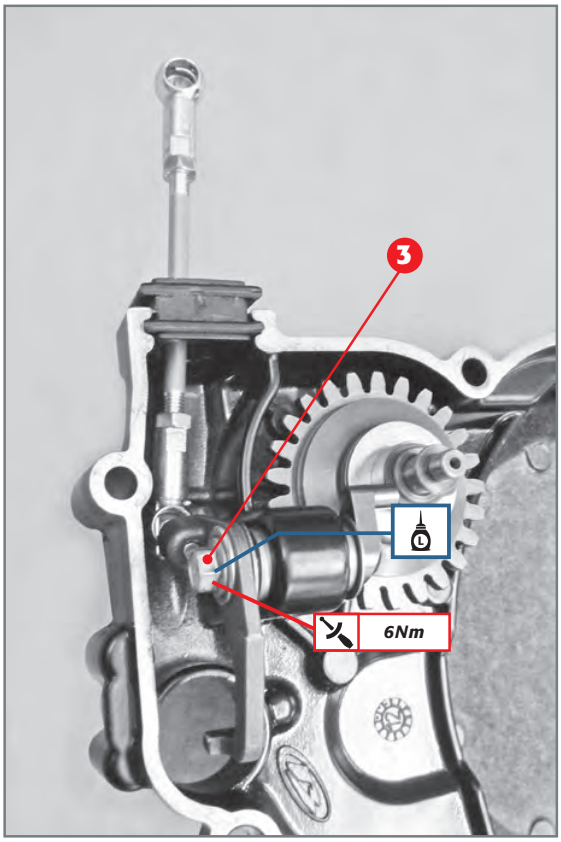

Centrifugal unit.

Apply blocking screws **3** prior depositing of medium strength threadlocker. Fasten at 6Nm

Downloaded from www.Manualslib.com manuals search engine

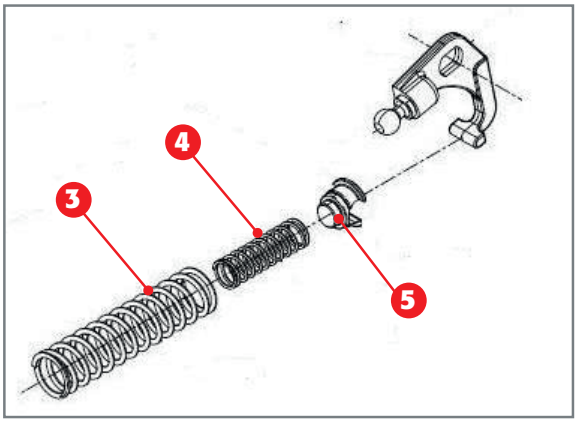

Spring guide and springs unit.

Apply the auxiliary **4** and adjusting **3** springs to the spring guide **5**.

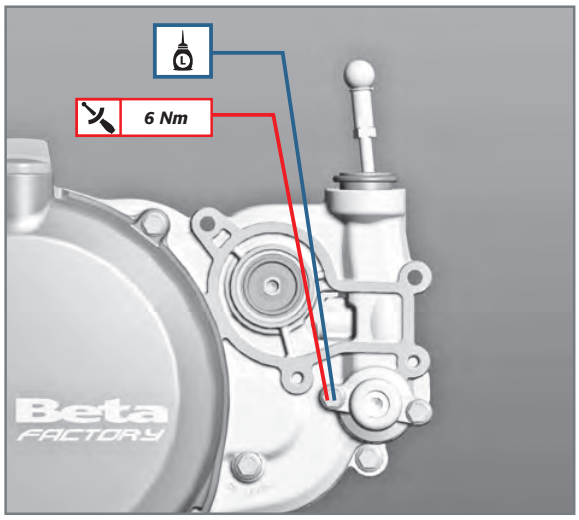

Fastening of adjusting cover.

Apply the complete regulator cover to the inner clutch cover. Apply the blocking screw prior application of medium strength threadlocker and fasten at 6Nm.

The vehicles equip the following auxiliary and adjusting springs.

Displacement [cm³]	Adjusting spring	Auxiliary spring
	Colour	Colour
250	White	White
300	Green	White

Downloaded from www.Manualslib.com manuals search engine

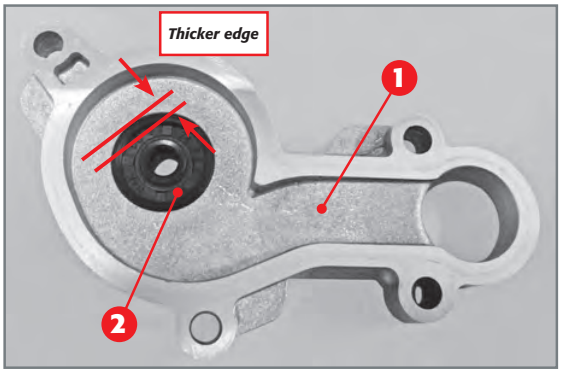

Application of the oil seal to pump body.

3.9.3 Assembly of pump unit

Grease the oil seal housing on the pump body **1**. Position the oil seal **2** so that the thicker edge faces the outside of the pump body. Insert the oil seal, having it enter the seat very slowly to keep it from deteriorating. The oil seal edge must be at the same quota of the pump body (outer side).

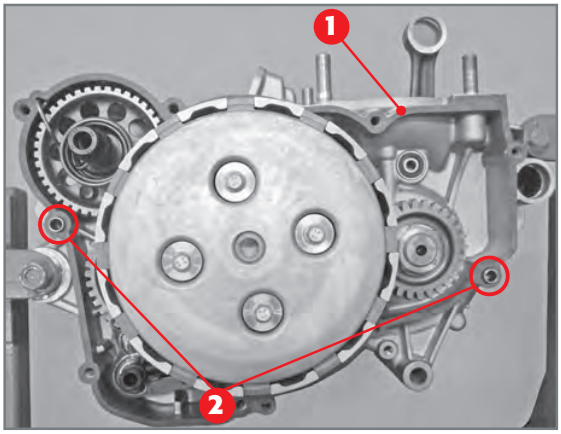

Positioning of gasket and reference pins.

3.9.4 Assembly of complete clutch cover and pump unit

Apply a new gasket **1** placed between the right crankcase half and the inner clutch cover using the two reference pins **2** to keep it in place.

Couple the inner clutch cover to the right crankcase half and rotate the centrifugal shaft until the shaft meshes in the main gear.

Downloaded from www.Manualslib.com manuals search engine

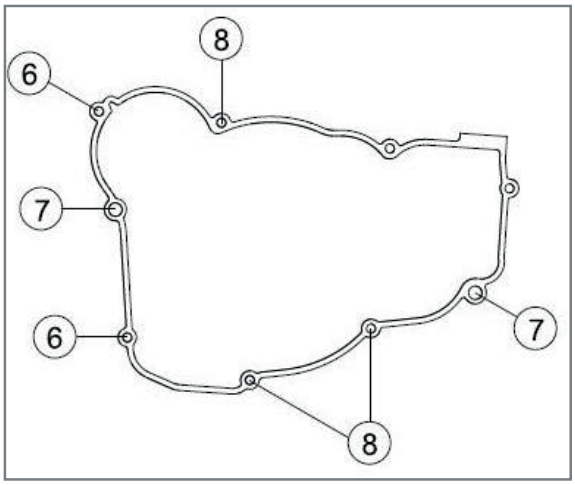

Screws positioning.

Apply the seven screws as shown in figure, fastening them at 10Nm with a criss-cross pattern.

Screw number	Screw dimensions		Threadlocker application	Tightening torque [Nm]
	Threading length	Threading length		
6	M6	20	NO	10
7	M6	25	NO	10
8	M6	50	NO	10

Downloaded from www.Manualslib.com manuals search engine

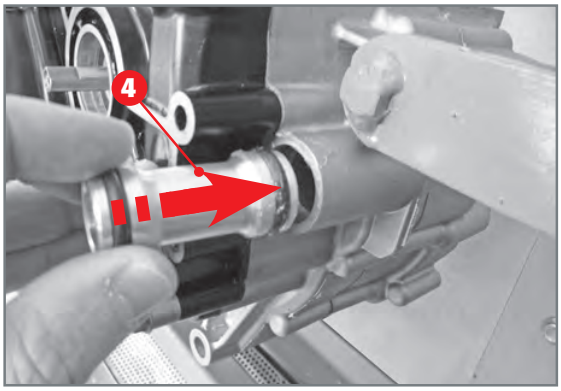

Insertion of water hose.

Grease the O-rings on the water hose and insert the hose **4** in the right crankcase half.

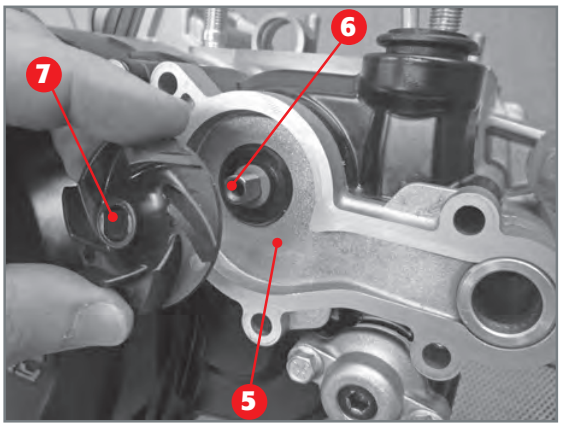

Application of water pump impeller.

Apply the gasket between the pump body and clutch cover. Grease the inner diameter of the oil seal on the pump body **5** and apply the body to the clutch cover.
Apply washer **6** and water pump impeller **7**.

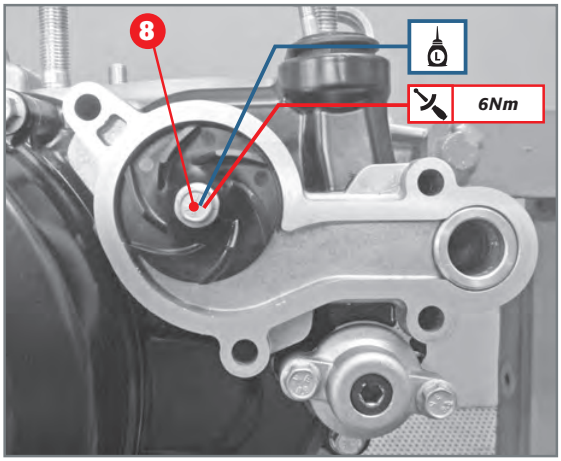

Complete water pump.

Apply screw **8** prior application of the medium strength threadlocker and fasten at 6Nm.

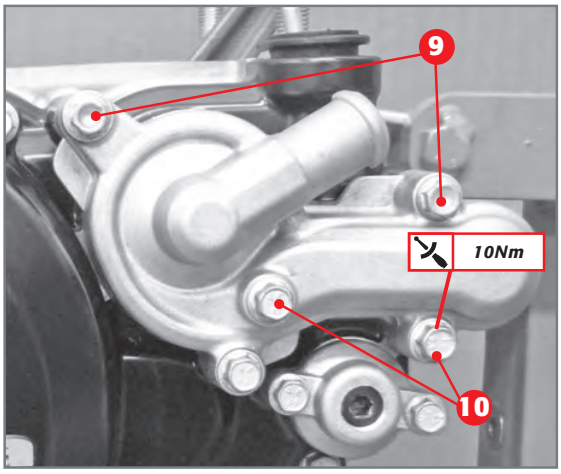

Pump cover.

Couple the water pump cover to the pump body by applying the two M6x60 screws **9** and the two M6x30 screws **10**. Fasten all screws at a torque of 10Nm following a criss-cross pattern.

Downloaded from www.Manualslib.com manuals search engine

3.10 ELECTRIC IGNITION UNIT

Carry out the following checks before assembly.

3.10.1 Bendix coupling checks

Check wear of the gearwheels present on the unit. Replace the whole coupling in case of abnormal wear and signs of chipping of the wheels. Keep wheel **1** fixed and rotate the mobile coupling **2** anti-clockwise; this must slide without jams. By releasing the mobile coupling, this must go back to rest position without jams.
Replace the whole unit if anomalies are detected during these two checks.

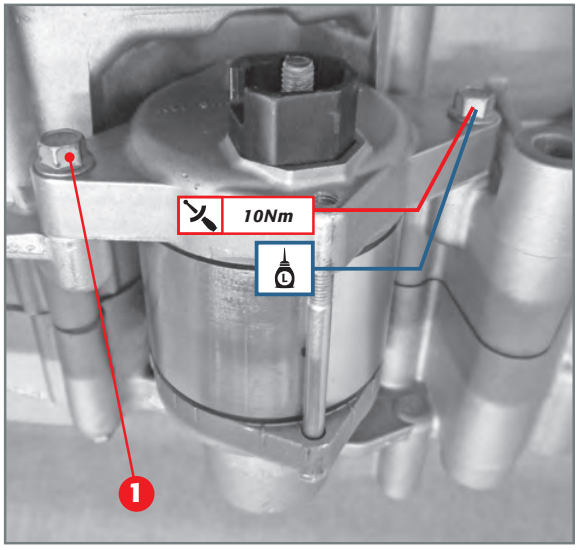

3.10.2 Ignition unit coupling to motor

Apply a thin layer of grease on the O-ring present on the start motor. Insert the start motor in its seat and block it with the two screws **1**, prior application of medium strength threadlocker. Fasten at 10Nm.

Downloaded from www.Manualslib.com manuals search engine

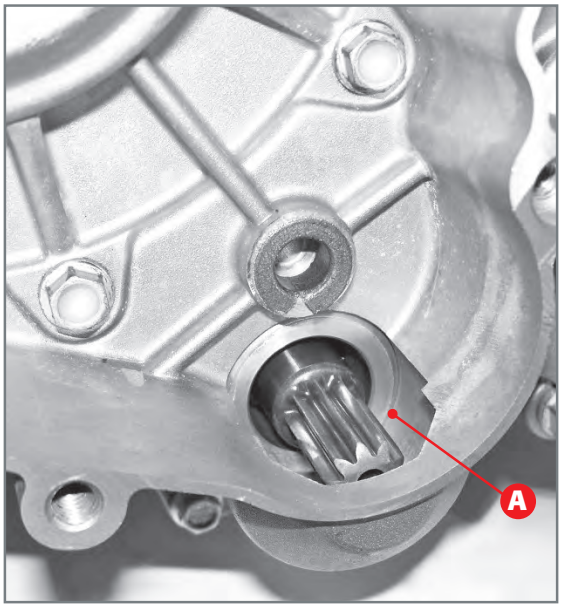

Application of oil.

Pour about 7cc of gearbox oil (PANOLIN OFF ROAD 4T SYNTH 10W/40) in area **A**.

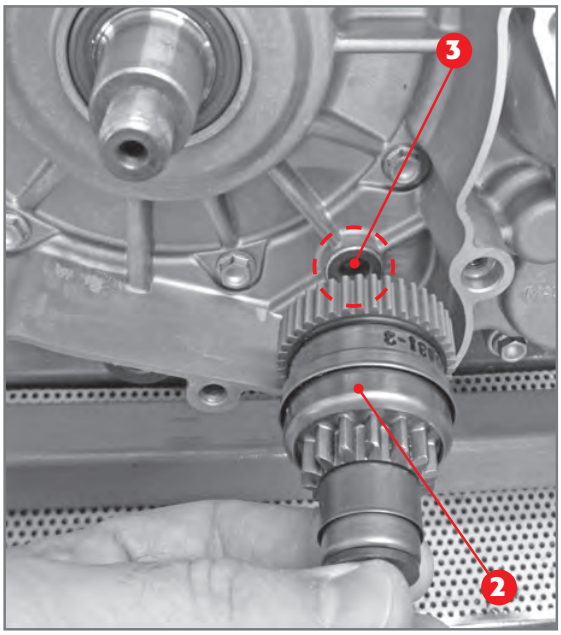

Insertion of Bendix coupling.

Insert Bendix coupling **2** in bush with collar **3** present on the outer side left crankcase half.

3.11 IGNITION SYSTEM

Before reassembling the ignition system, it is recommended to check its correct functioning.
The ignition system is made up of the magnetic pick-up, the stator unit and the flywheel. The system is completed by the ignition coil and the spark plug, which are not dealt with in this text.

Downloaded from www.Manualslib.com manuals search engine

3.11.1 Check of ignition system

Accurately degrease the various elements and carry on with the checks.
The main check is the one concerning the electrical verification which can be done by using a standard tester. The detected strength values must respect those in the table.

Element	Cables	Strength values
Pick up	Red – Green	100Ω ± 20%
Stator	Red/Black – White/Red	14,7Ω ±15%
	Yellow – Mass	0,61Ω ±15%
	Yellow - White	0,18Ω ±15%

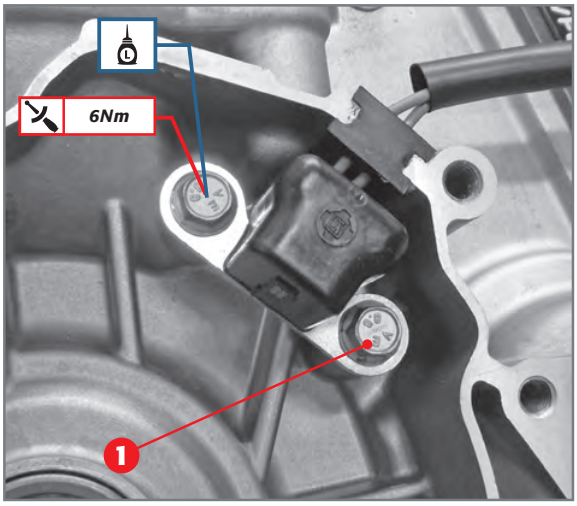

Coupling of pick up to crankcase.

3.11.2 Coupling of ignition system to crankcase

Apply the pick up to the crankcase by inserting the gasket in the specific seat, prior application of the isolating silicone paste.

Cover the two screws **1** with medium strength threadlocker and tighten them at a torque of 6Nm.

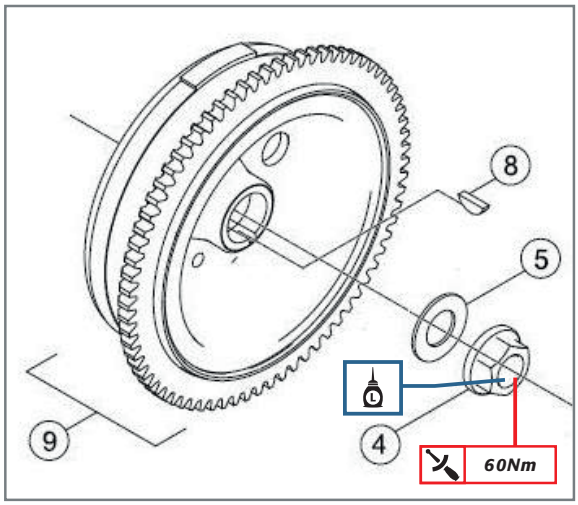

Exploded view of flywheel. 4) Nut M12x; 5) Elastic washer; 8) Woodruff key; 9) Flywheel.

Thoroughly degrease the crankshaft conical section, apply the Woodruff key **8** in the appropriate groove present on the crankshaft, couple the flywheel **9**, the elastic washer **5** and the nut **4**, after having spread the threading with medium strength threadlocker.

Downloaded from www.Manualslib.com manuals search engine

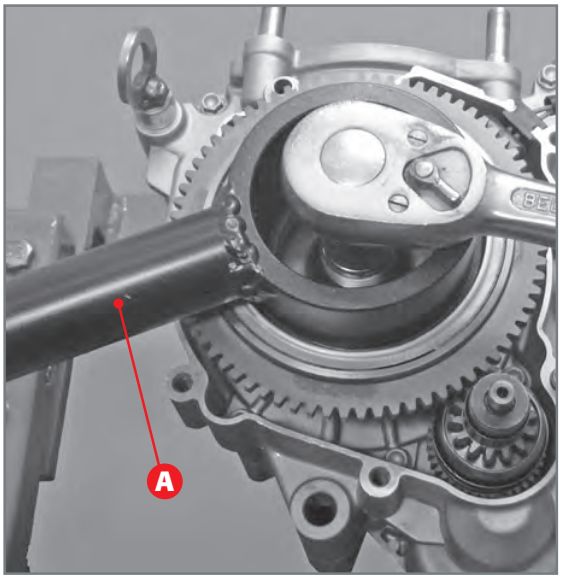

Flywheel fastening.

Fasten the nut to torque 60Nm, keeping the flywheel blocked with special tool **A** (code 026140040 000).

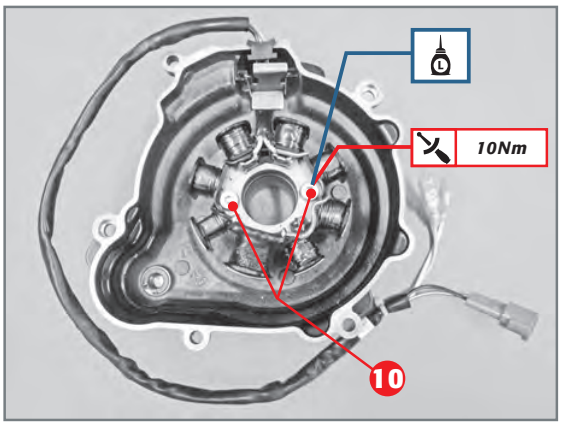

Coupling of stator to flywheel cover.

Couple the stator to the flywheel cover by means of the two screws **10**. Apply the threading with medium strength threadlocker and tighten them at a torque of 10Nm.
Insert the cable gland in its specific seat and check its perfect sealing.

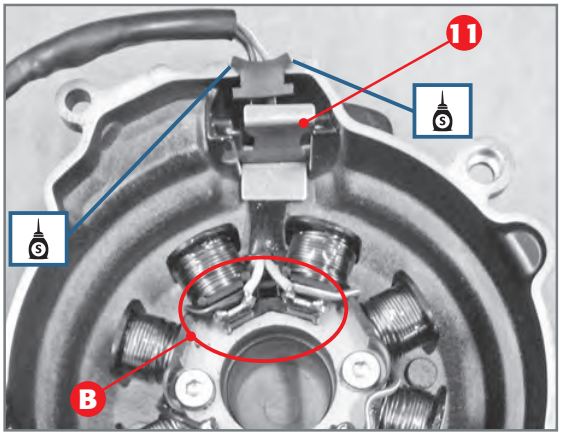

Application of stator plate.

Apply a few drops of silicone in the guides for housing the plate **1**. Apply the plate **11** to be inserted in its guides and pressed. When coupling it to the left crankcase half, apply a drop of gasket paste *(code 3625000000)* in area **B**.

Downloaded from www.Manualslib.com manuals search engine

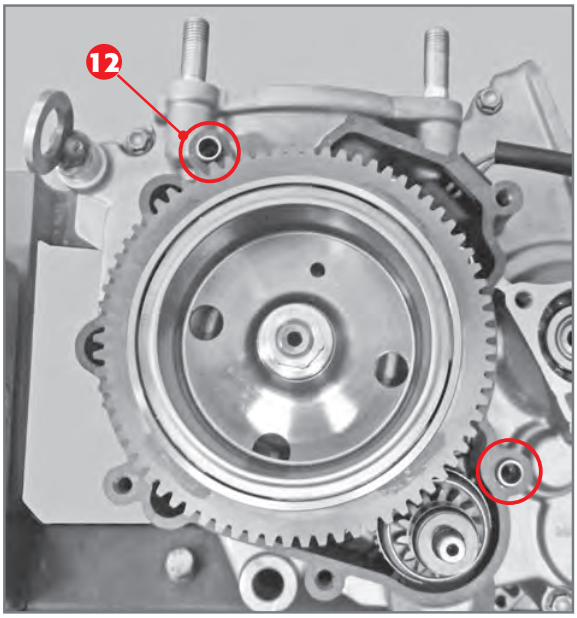

Application of flywheel cover centring pins.

Insert the centring pins **12** on the crankcase and fasten a new gasket.

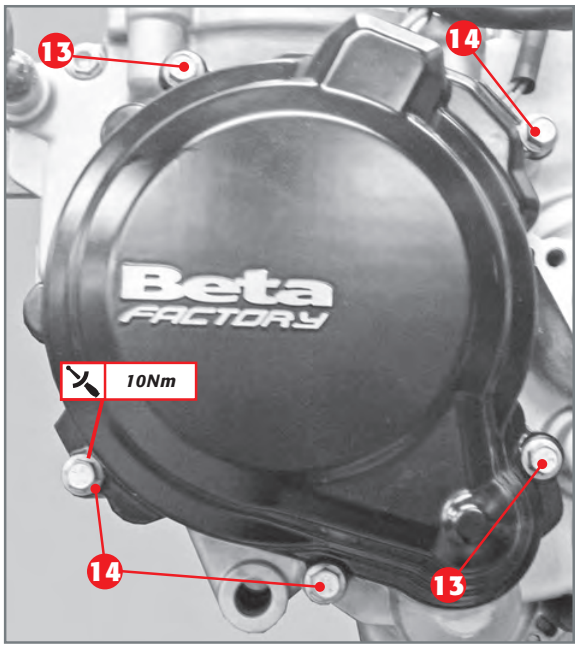

Flywheel cover coupled to crankcase.

Apply the flywheel cover, the two M6x25 screws **13** and the three M6x20 screws **14**. Tighten in a criss-cross pattern at a torque of 10Nm.

Note: *When doing a complete overhaul of the engine or intervening on the thermal unit, do not apply the cover as it has to be removed to find the Top Dead Centre.*

Downloaded from www.Manualslib.com manuals search engine

Quota at which to measure the outside diameter of the piston.

3.12 THERMAL UNIT

Before assembling the thermal unit, thorough checks must be carried out on the cylinder, piston, pin bolt, elastic bands described hereafter.

3.12.1 Checking piston and elastic bands

Eliminate carbonaceous sediment from the top of the piston and wash the entire piston with specific degreasing agent.
Do not use sharp points or tools for cleaning.
Then carry out a careful analysis of the piston which must be free from forcing, scratches, cracks or any type of damage.
Analyse the external diameter of the piston.
The diameter must be measured at a distance **X** from the inner edge of the skirt, perpendicularly to the axis of the pin bolt.

Refer to the following table for the piston's selection classes.

Displacement [cm³]	Quota X [mm]	Bore [mm]		
		A	B	C
250	24	66,335÷66,345	66,345÷66,355	66,355÷66,365
300	18	71,935÷71,945	71,945÷71,955	71,955÷71,965

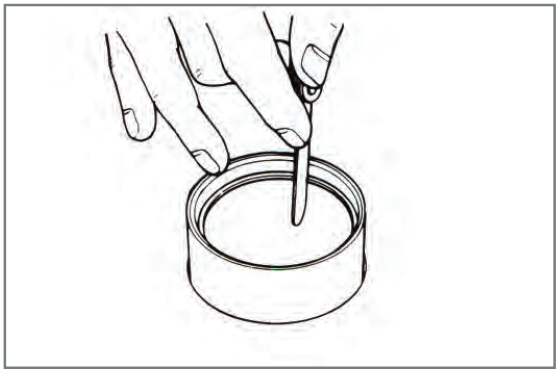

First check of elastic bands.

In order to check the state of use of the elastic bands, the band must be inserted in the cylinder so that its axis is aligned with the axis of the cylinder. Then measure the distance between the two opposite edges.
The elastic bands must be positioned at about 31 mm from the cylinder's upper edge.
The respective service limits are carried in the table below.

Displacement [cm³]	Service limit of elastic band [mm]
250 - 300	0,4

Downloaded from www.Manualslib.com manuals search engine

3.12.2 Cylinder check

Check the cylinder is without signs of seizure. On the contrary, replace it.
Measure the bore at a distance **A** from the top face of the cylinder (surface between cylinder and head). Take the correct measurement by following direction **X**.

Displacement [cm³]	*Quota A [mm]*
250 - 300	*31,5*

Bore measurement is required to know the coupling play between cylinder and piston.

Downloaded from www.Manualslib.com manuals search engine

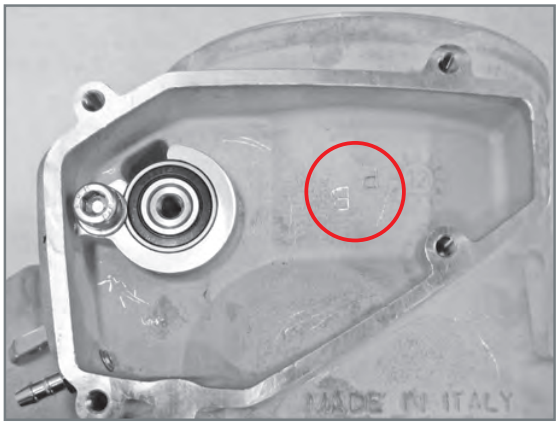

Punching of cylinder class.

The cylinder's specific class is punched inside the resonance chamber compartment.

3.12.3 Piston cylinder coupling play

The following table carries the coupling play between the cylinder and piston. In order to calculate the coupling play between the cylinder and the piston, a subtraction must be carried out between the diameter of the cylinder and that of the piston.

Displacement [cm³]	Maximum play of piston cylinder
250 - 300	0,1

3.12.4 Checks and exhaust valve unit disassembly

Remove screw **1** fastening the valve control unit to the booster; then remove screw **2** fixing the bearings.

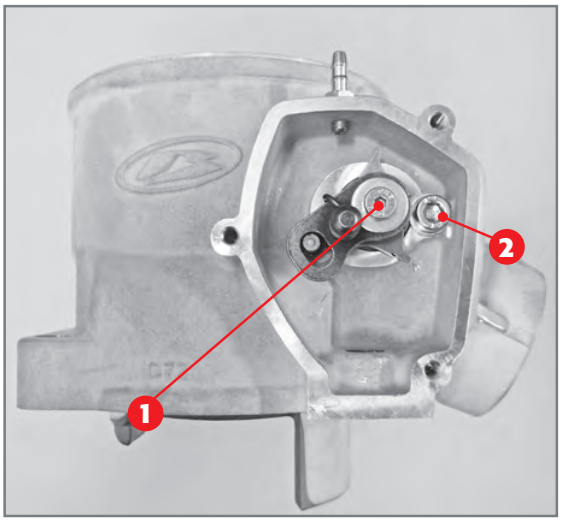

Complete valve control unit.

Downloaded from www.Manualslib.com manuals search engine

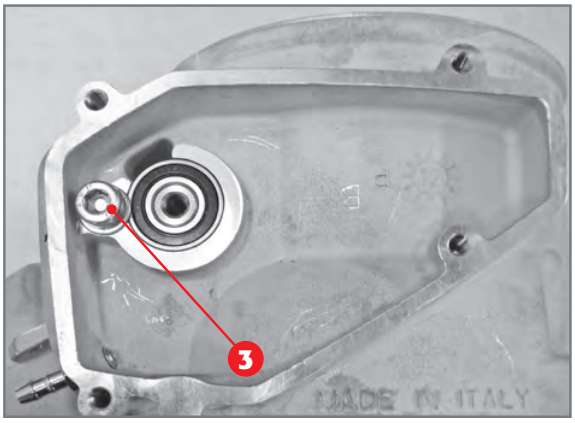

Fixing of booster bearings resonance chamber side.

Remove screw **3** fixing the bearings, located on the resonance chamber side.

Note: *Should it be necessary to descale the valve unit, remove the screws 2 and 3 and extract the booster, without removing the valve control unit.*

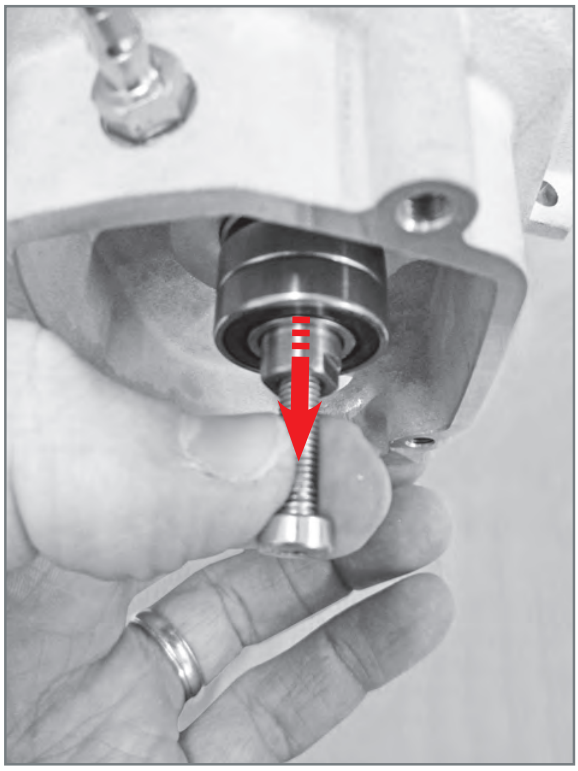

Extraction of booster.

Tighten one M5 screw to the booster control unit side and pull externally. Use a pair of pliers or similar tool if required.
Repeat the operation with the booster on resonance chamber side, using one M6 screw.

Downloaded from www.Manualslib.com manuals search engine

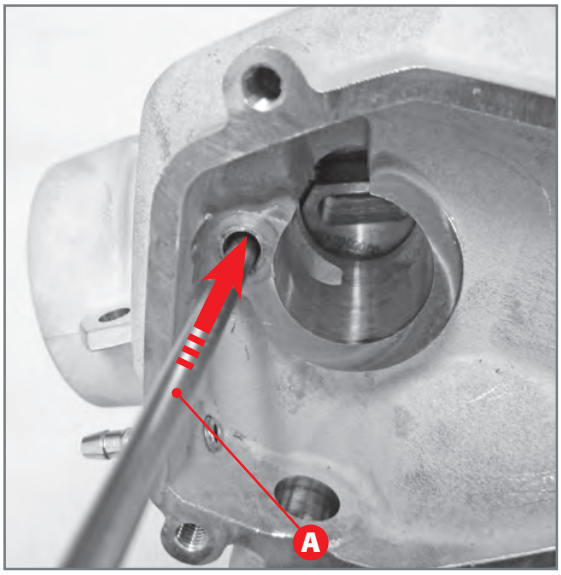

Extraction of pin.

Extract the control valve pin if it has not come away with one of the boosters.

Extract the valve pin by pushing it using a metal cylinder **A** and then extract the valve, that is divided into two pieces (right and left).

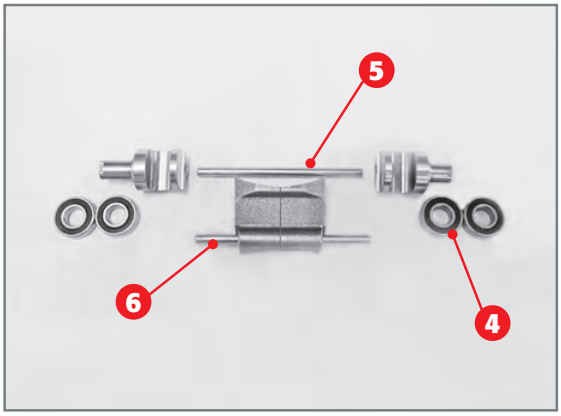

The exhaust valve unit.

Check the bearings **4** supporting the booster are efficient, without jams during functioning or excessive play, once the unit has been cleaned and descaled. On the contrary, replace.
Check pins **5**, **6** and relative seats are not abnormally worn. On the contrary, replace the worn parts.

3.12.5 Exhaust valve unit assembly

Insert the right and left exhaust valve in the exhaust pipe so part **A** is facing the upper part of the cylinder and the fulcrum is facing the front of the cylinder.
Insert the valve in the fulcrum.

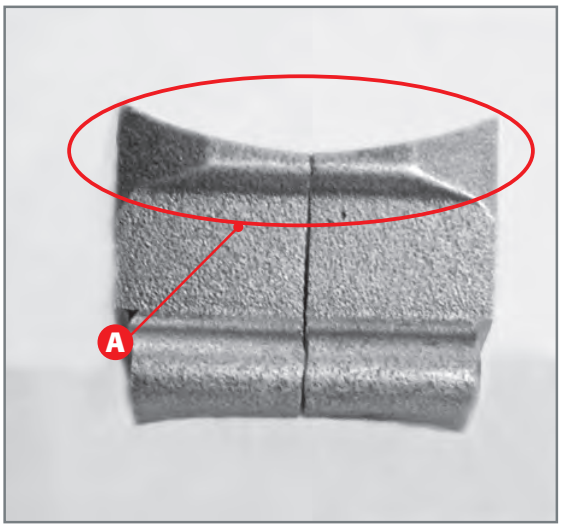

Area A of the exhaust valve.

Downloaded from www.Manualslib.com manuals search engine

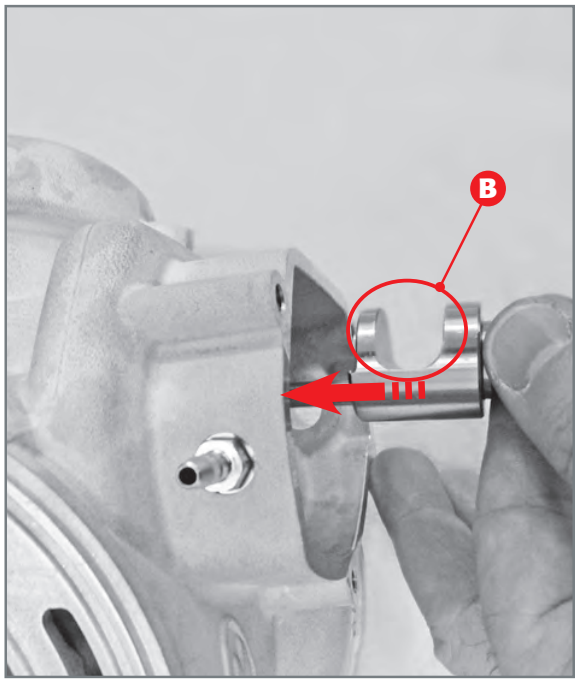

Insertion of booster.

Apply the valve control pin to one of the two boosters and insert the unit in the cylinder, so that:

- the pin engages in the open slot in the valves;
- the booster's area B is facing the front of the cylinder.

Apply the other booster.

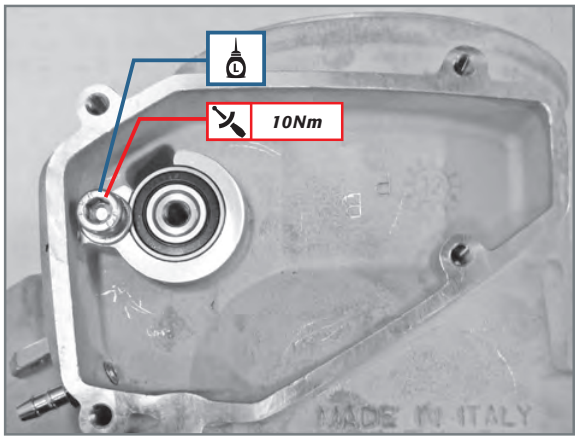

Apply the four bearings (two each side) that support the boosters and fully press them in seat.

Apply the booster bearings fixing screws with washer. Apply on the medium-resistance sealant threading and fasten at 10Nm.

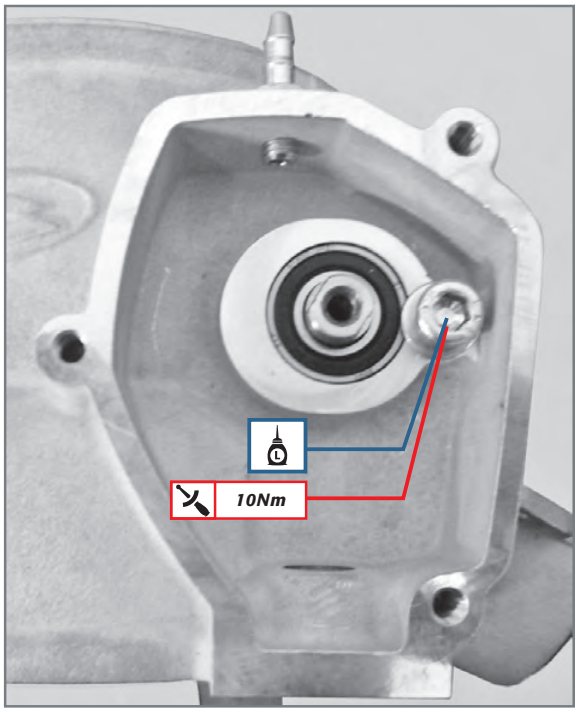

Downloaded from www.Manualslib.com manuals search engine

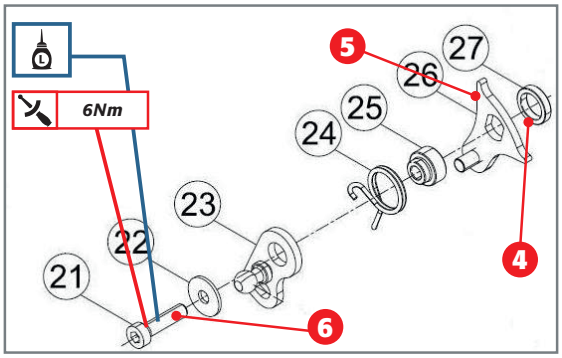

Complete valve control unit.

Apply spacer **4** and the complete stroke end lever **5** on the control side.
Then apply all other parts. Screw **6** must be covered with medium strength threadlocker and fastened at 6Nm.
Try moving the unit and check the entire mechanism perfectly slides, once assembly is completed.

3.12.6 Piston, pin bolt, elastic bands and cylinder assembly

Insert a circlip for pin bolt retaining in one of the seats on the piston's side, placing the circlip's open part upwards or downwards.
Apply the roller cage in the connecting rod's foot, and lubricate it.
Oil pin bolt and seat in piston. Insert the pin bolt in the piston from opposite side to where the circlip was inserted, leaving enough space to allow connecting rod coupling to piston.
Place a piston so that the arrow stamped on the crown is facing the front of the engine (outlet port). Couple the piston to the connecting rod by fully pushing the pin bolt until flush with the previously inserted circlip. It may be helpful to use an aluminium cylinder (or similar tool) during this phase.

***Attention!** Place a clean cloth between the piston and the crankcase to keep foreign objects from falling inside the base.*

Introduce the second circlip in the specific seat by placing the open part upwards or downwards. Remove the previously inserted cloth.
Abundantly oil the skirt of the piston with engine oil and insert the elastic bands, which edges must face the area with the stop pin.

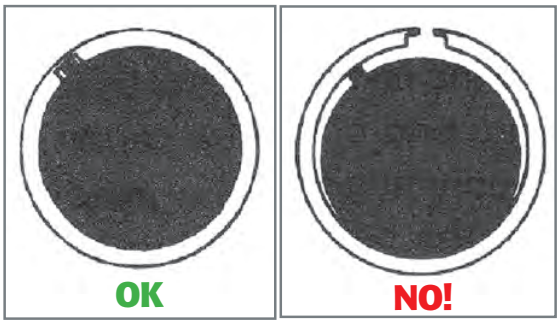

Positioning of elastic bands on the piston.

Downloaded from www.Manualslib.com manuals search engine

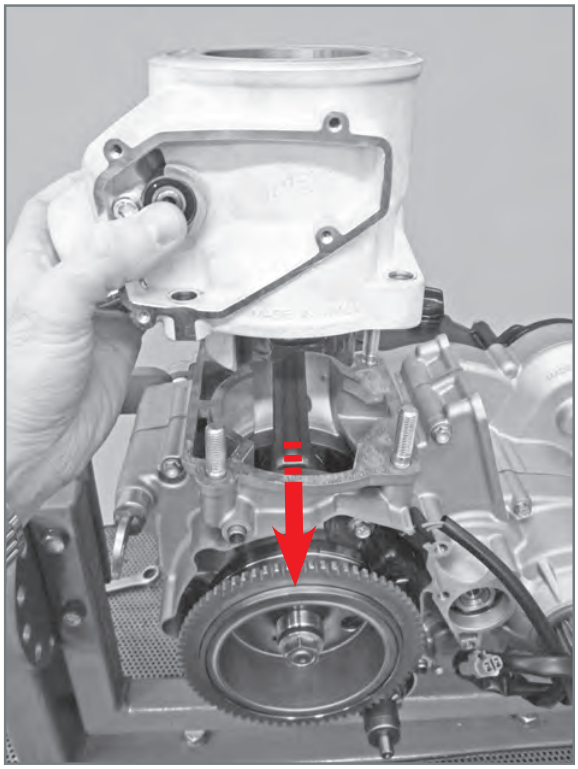

Coupling of cylinder to piston and crankcase.

Apply the gasket between crankcase and cylinder.

Accurately oil the entire cylinder using engine oil and insert the piston in the cylinder. The piston must be inserted in the cylinder fastening the elastic bands between the fingers. The cylinder must be positioned so that the outlet port is facing the front of the engine.
Push the cylinder towards the base.

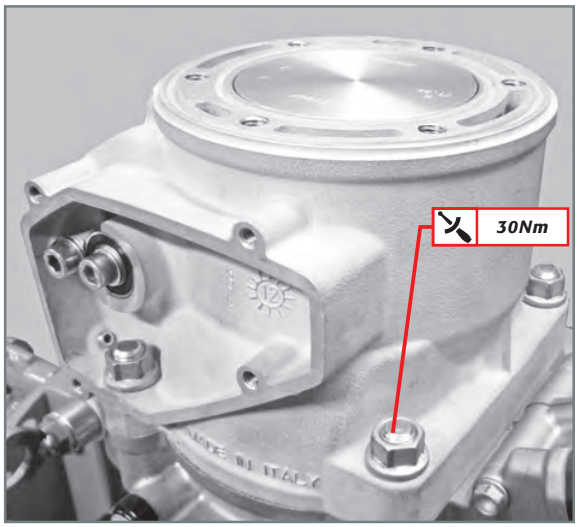

Fastening of cylinder nuts.

Apply the four collar nuts and fasten them at 30Nm, following the criss-cross pattern.

Downloaded from www.Manualslib.com manuals search engine

3.12.7 Check of crankcase/cylinder gasket thickness

The thickness of the gasket between the cylinder and crankcase must be checked every time the following are replaced:

- Cylinder;
- Piston;
- Crankshaft;
- Connecting rod;
- Crankcase.

The check is necessary as such thickness affects the engine performances. This check must be carried out using specific calibrated plates set-out in the table.

Displacement [cm³]	Model Year	Code	Side
250	2013	026140020 000	B
300	2013		A

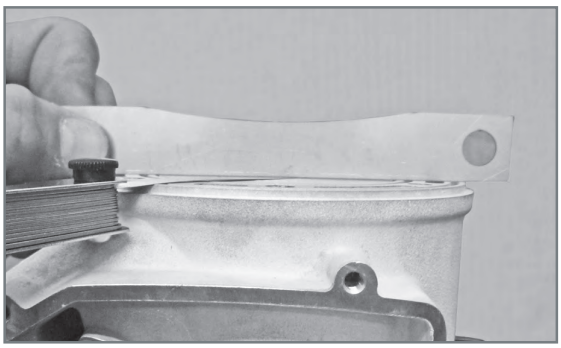

If the plate and piston do not touch: check distance between plate and piston.

The use of the plates is described below.

- Rest the specific plate making sure it comes into contact with the cylinder's upper surface.
- Bring the piston to top dead centre and, using a thickness gauge, check play between the piston and plate is between 0÷0.10mm.

If play between piston and plate is higher by 0.10mm, reduce the cylinder/crankcase gasket thickness and carry out the test again.

Downloaded from www.Manualslib.com manuals search engine

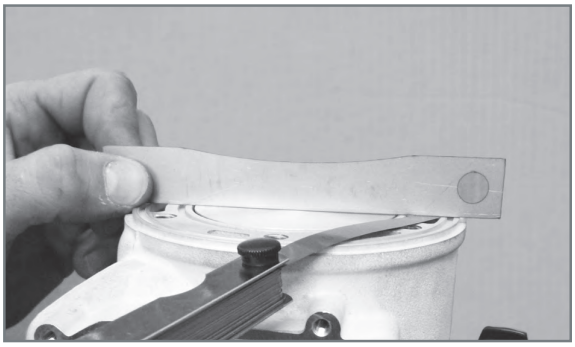

If the piston pushes the plate failing contact cylinder/plate

Measure play with thickness gauge and increase gasket thickness so contact between plate and cylinder is guaranteed, if the piston pushes the plate upwards failing contact between plate and cylinder. Carry out the check again.

The gaskets are supplied in four different thicknesses:

- 0,3mm;
- 0,4mm;
- 0,5mm

that can also be stacked, thus obtaining the necessary height for the right thickness.

***Note:** the above-described check must be carried out once all four crankcase cylinder coupling nuts have been fastened at the set torque (30Nm).*

3.12.8 Head application

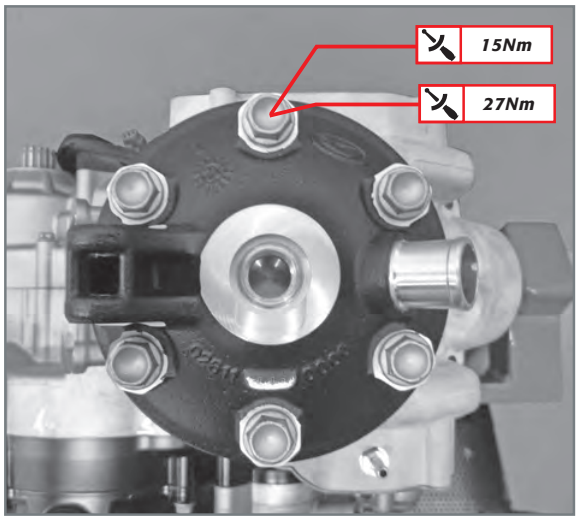

Fastening of head.

Apply the two O-rings to the cylinder. Rest the head so that water hose is facing the front of the engine. Grease the screws and apply them to the head, together with the copper washers. Following a criss-cross pattern, fasten in two phases:

1. 15Nm;
2. 27Nm

Downloaded from www.Manualslib.com manuals search engine

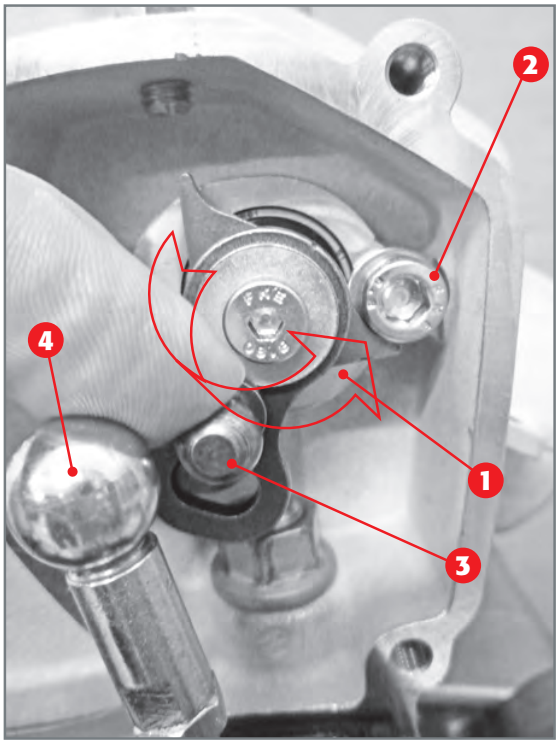

Positioning of valve control.

3.12.9 Exhaust valve adjustment

Bring the valve control unit**1** in all closed position so the stroke end lever is flush with screw **2** fixing the booster bearings.

Check the ball head **3** and the seat **4** are perfectly aligned.
On the contrary, loosen the lock nut, adjust the seat and fasten the lock nut.

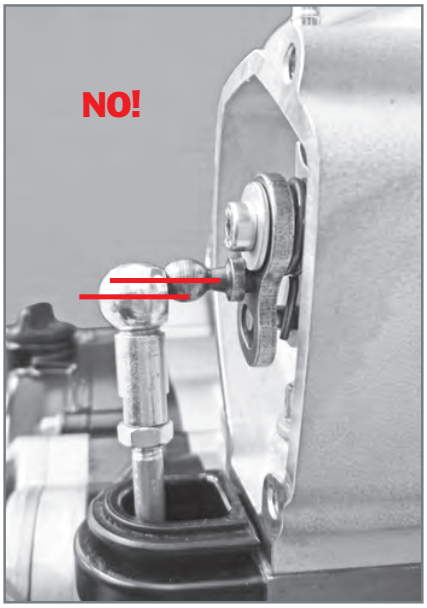

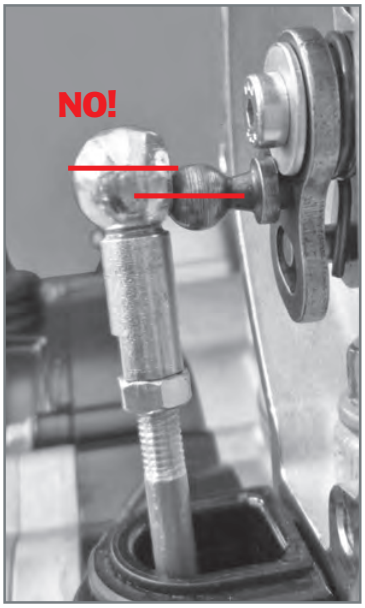

Incorrect positions of the control rod seat.

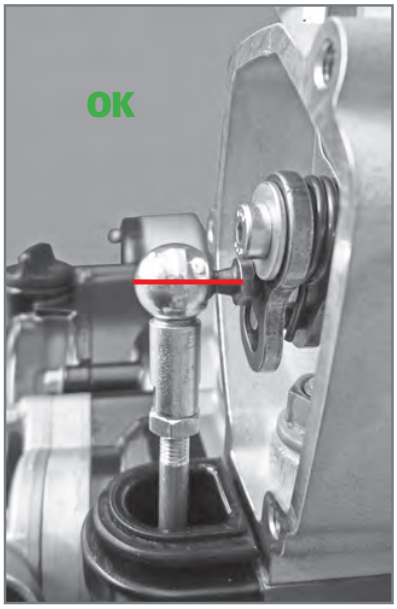

Correct position of the control rod seat.

Downloaded from www.Manualslib.com manuals search engine

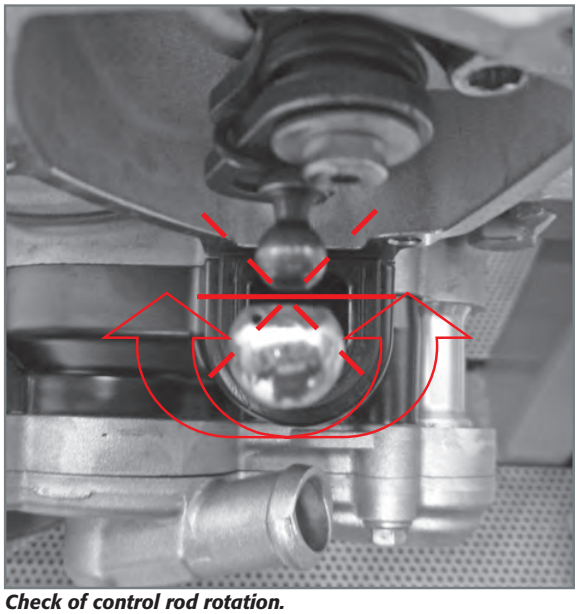

Check of control rod rotation.

The the control rod is able to rotate around its axis, making equal angles respect to the ball head axis.

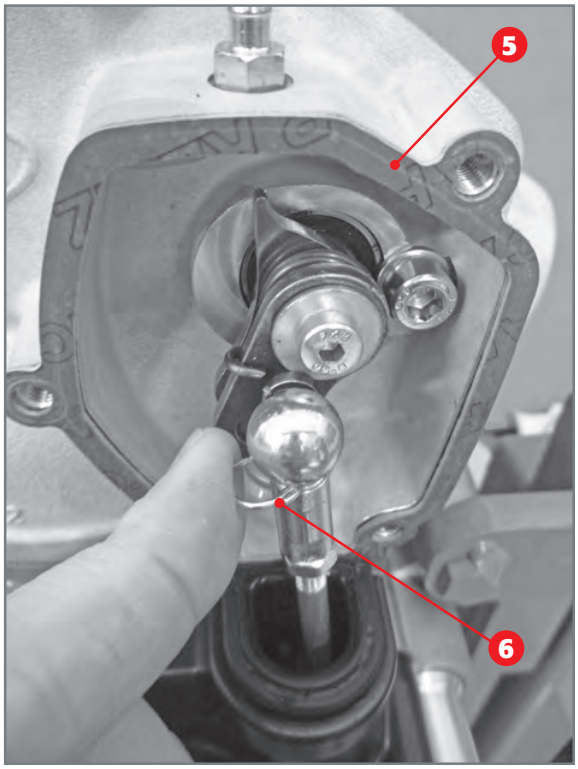

Insertion of control rod and application of stop.

Apply gasket **5** and insert the control rod.
Apply the stop **6**.

Downloaded from www.Manualslib.com manuals search engine

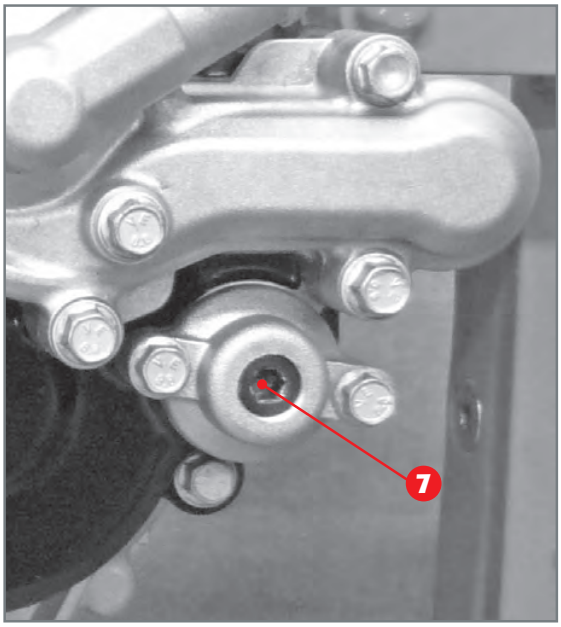

Intervene on screw **7** for the dynamic adjustment of the exhaust valve unit, thus modifying the characteristic curve of the engine.
The positions indicated in the below table are those considered excellent for engine functioning.

Displacement [cm³]	*Regulation of adjustment screw (from all open)*
250	*1 1/2*
300	*1 1/2*

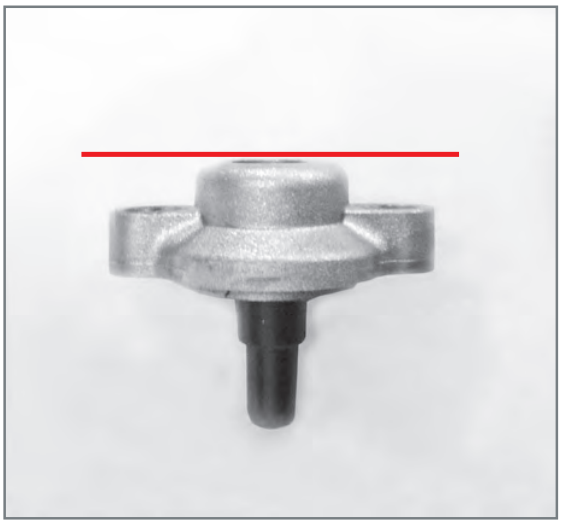

Reference of all open.

The "all open" position corresponds to the perfect alignment between adjustment screw head and adjustment cover.
Adjustment must, therefore, be carried out as follows.

- Bring the screw to "all open" position;
- Tighten the number of turns indicated in the table.

The effects obtained from modifying the position of the adjustment screw respect to the positions in the above table, are shown in the table.

Clockwise rotation of adjustment screw	*Anti-clockwise rotation of adjustment screw*
Softer flow-rate and less over-rev	*Greater acceleration and lower torque at low speeds*

Attention! *Do not tighten the adjustment screw for more than three and a half turns from the all open position.*

Downloaded from www.Manualslib.com manuals search engine

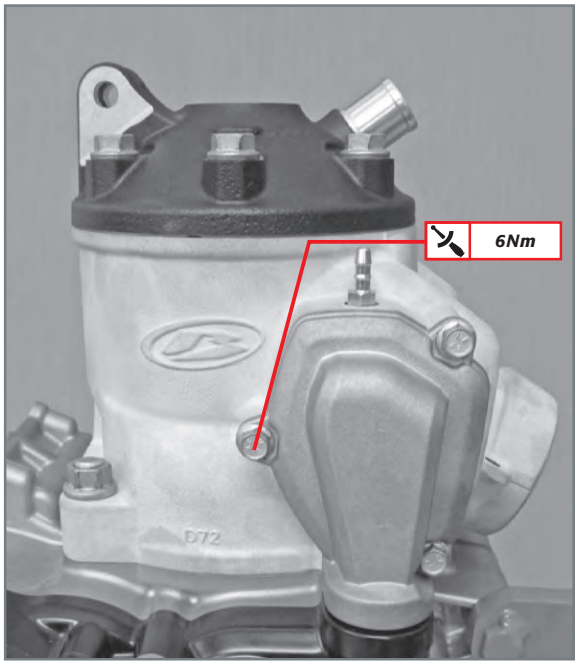

Application and fastening of valve control unit cover screws.

3.12.10 Application of covers

Apply the valve control unit cover and relative screws. Fasten at 6Nm.

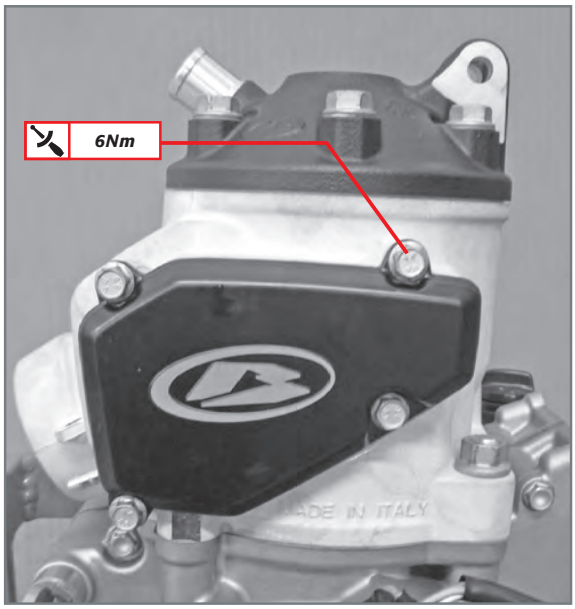

Application of resonance chamber cover and relative screws.

Apply the resonance chamber side gasket and cover. Apply the screws and fasten at 6Nm.

Downloaded from www.Manualslib.com manuals search engine

3.13 CHECK OF INTAKE UNIT AND ASSEMBLY

Check the manifold **1** is intact and without cracks. On the contrary, replace it.
Check that the multiflap **2** of the reed valve **3** are intact and not deformed. On the contrary, replace them.

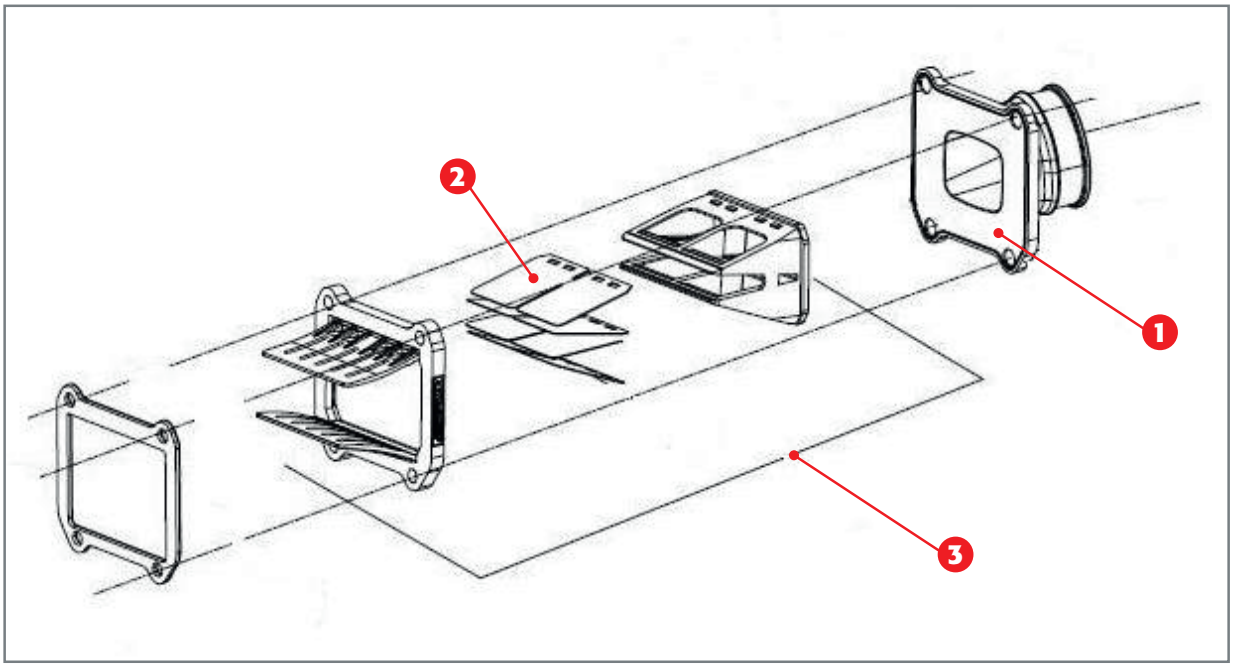

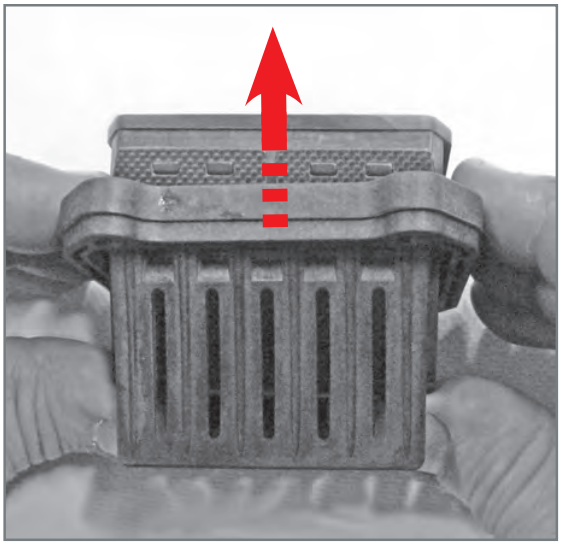

Disassembly of reed valve body.

Remove the multiflap by pressing the central body as shown in figure and remove the outer multiflap.

Downloaded from www.Manualslib.com manuals search engine

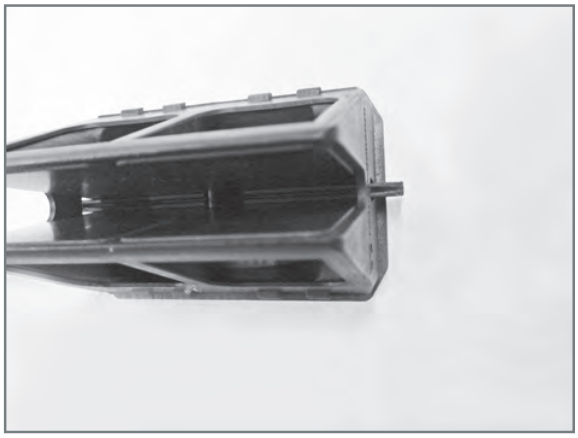

Disassembly of central wedges. The extraction of only one is shown in figure.

Remove the two central wedges and remove the multiflap.

Assemble the multiflap by following the just described procedure, in reverse order.

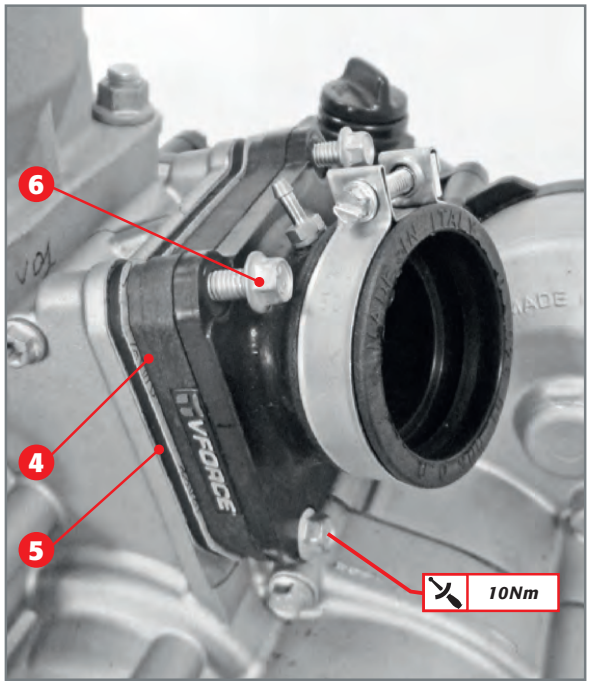

Application of reed valve.

For assembly of the entire intake system, apply the manifold to the reed valve, the gasket **4**, the spacer **5** and another gasket.

Tighten the screws **6** to 10Nm.

Downloaded from www.Manualslib.com manuals search engine

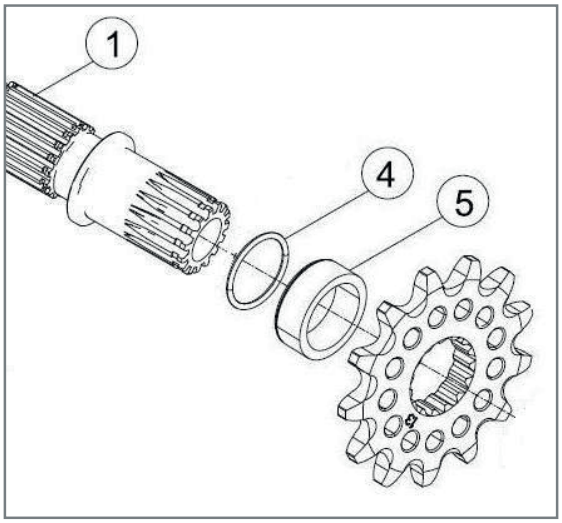

3.14 INSERTION OF CLUTCH ROD AND PINION SPACER

Apply the pinion spacer **5** to the secondary of the gearbox **1**, so that the groove is facing inside the engine.

Note: *check the O-ring **4** is present. On the contrary, apply it.*

Insert the gearbox rod in seat from the lower diameter side.

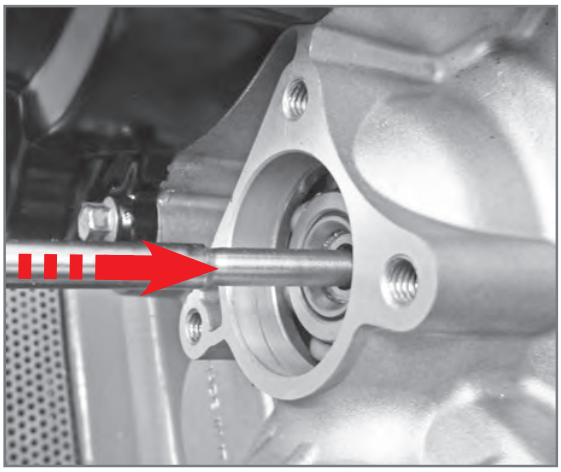

Insertion of clutch rod.

Downloaded from www.Manualslib.com manuals search engine

4 REASSEMBLY OF MOTOR IN VEHICLE

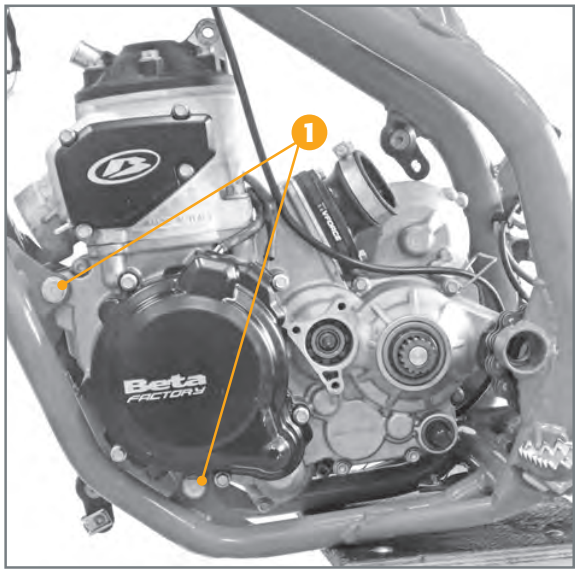

- Insert the engine in the frame. We recommend insertion from the frame's left side.
- Insert the engine pins **1**.

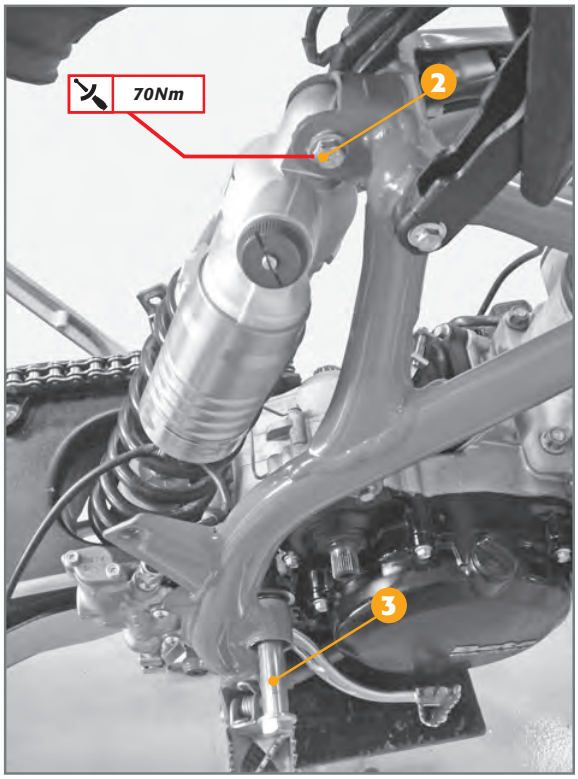

- Insert the upper shock absorber pin **2** and the swingarm pin **3**. Fasten the shock absorber pin at 70Nm.
- Apply the spark plug and fasten it at 28Nm.

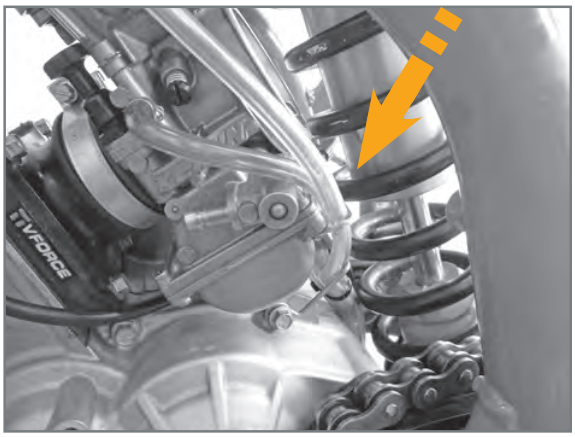

- Apply the carburetor to the manifold making the breather tubes pass in the appropriate metal cable gland.

Downloaded from www.Manualslib.com manuals search engine

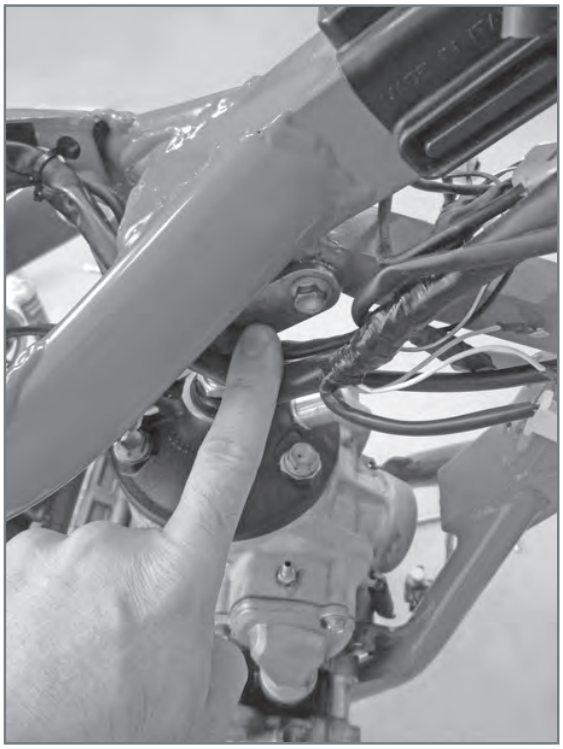

· Apply the head connections making the gas cable, the central electric system and the electric motor cable, pass between them. Note the central electric system passage on the right side head connection.

· Fasten the nuts and bolts following the table below.

Fixing	Screw	Torque [Nm]	Threadlocker
Head connection bracket to frame. Front fixing	M8 x 20	35	Medium-resistance
Head connection bracket to frame. Rear fixing	M8 x 16	35	Medium-resistance
Head connection brackets to motor	M8 x 65	35	
Engine pins	Speciale	45	
Swingarm pin	M16 x 245	125	

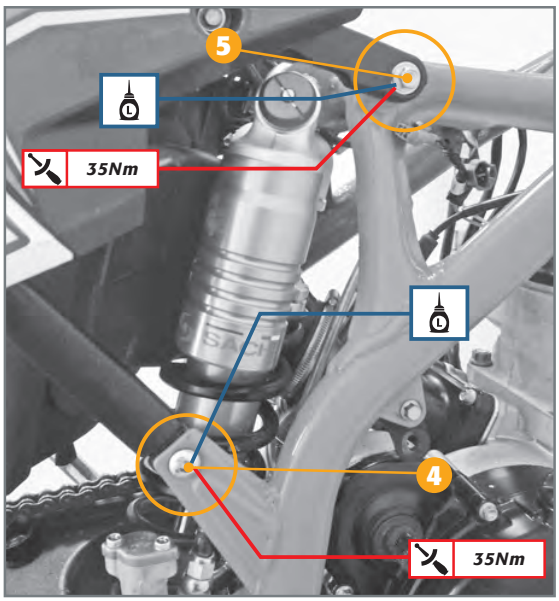

· Rotate the filter box in its normal position. Apply the lower fixing screws **4** (one each side) prior application of medium strength threadlocker and fasten at 35Nm. Tighten the upper screws **5** to 35Nm.

Note: *We recommend removing the upper screws (one each side) and apply medium strength threadlocker.*

Downloaded from www.Manualslib.com manuals search engine

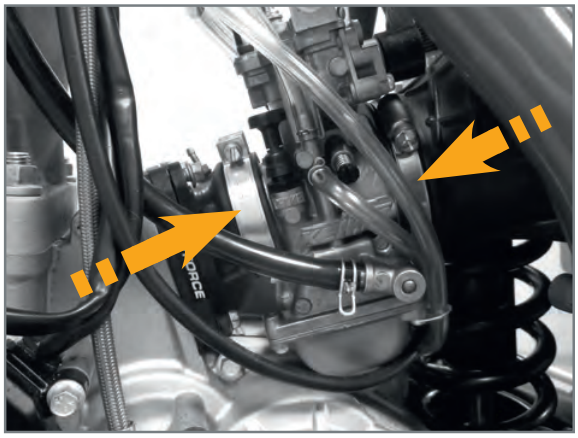

· Make sure the filter box sleeve is correctly inserted inside the carburetor, fasten the two filter box side and manifold side straps.

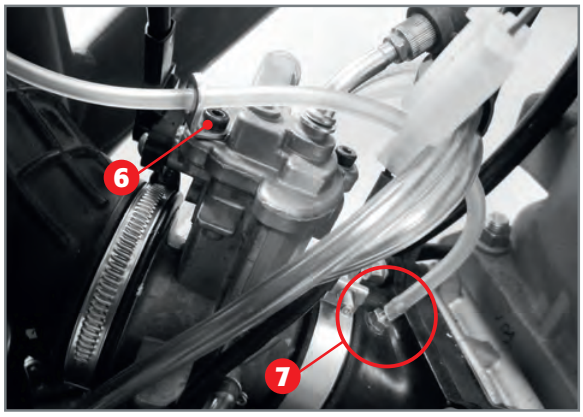

- Remove the cap applied to the mixer tube (see page 9).
- Slide the tube through the tube hole **6** and connect it to the nozzle **7** on the intake manifold.

ATTENTION! *Ensure that the tube is fitted all the way onto the nozzle.*

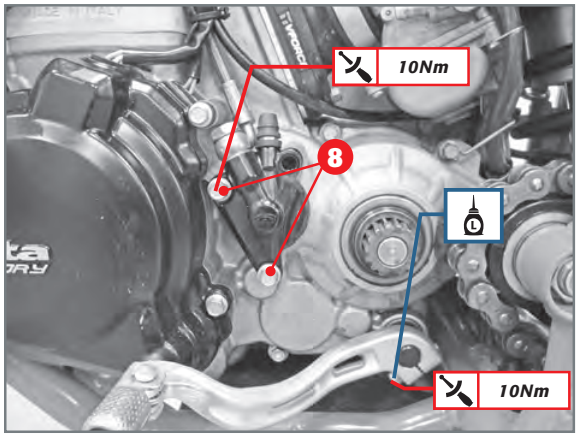

· Apply the complete coil unit to the intake manifold and tighten the screws **8** at 10Nm.
· Apply the gearbox lever and fasten the screw at 10Nm prior application medium strength threadlocker.

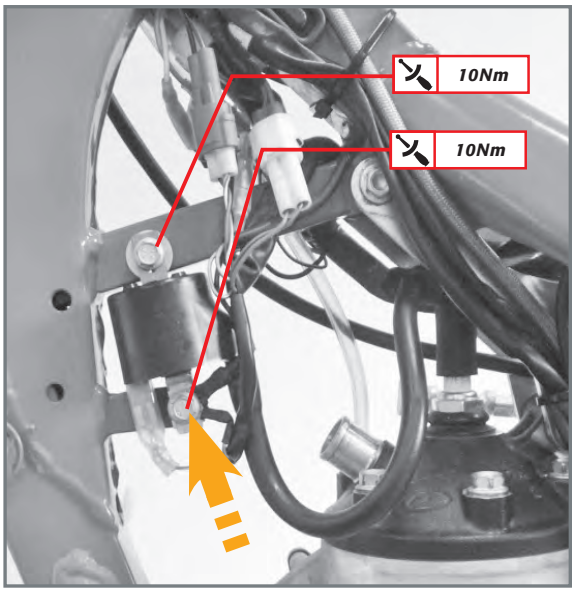

· By means of specific connectors, connect the engine electric system to the central one. By means of straps, fasten the engine electric system to the clutch pipe and to the frame.
· Apply the coil by means of relative screws and fasten at 10Nm.

Note: *the two loop connectors on the electric system must be secured to the coil using the lower fixing screw.*

· Connect the coil to the spark plug

Downloaded from www.Manualslib.com manuals search engine

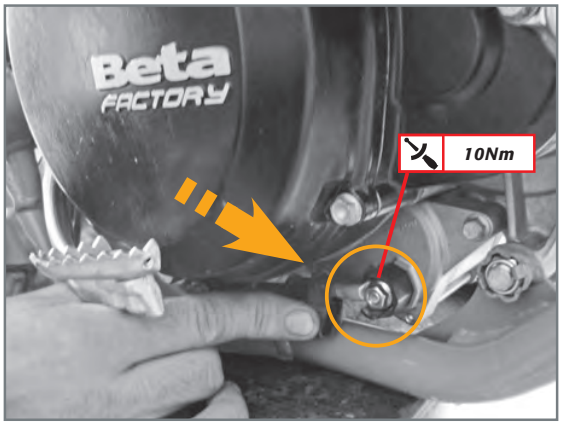

- Apply the start motor cable and fasten the nut at 10 Nm. Cover the connection using the specific protective cap.

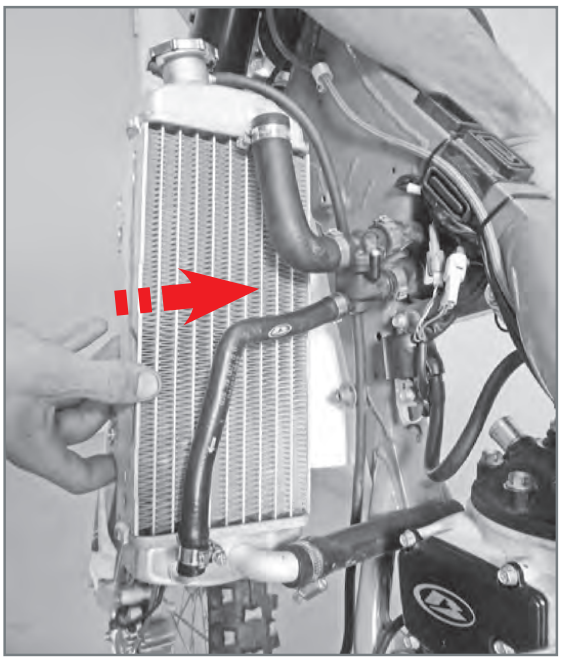

- Connect the ventilation pipes to the engine
- Apply the left radiator to the frame. Apply the screws and fasten at 10Nm. Apply the protective grid.

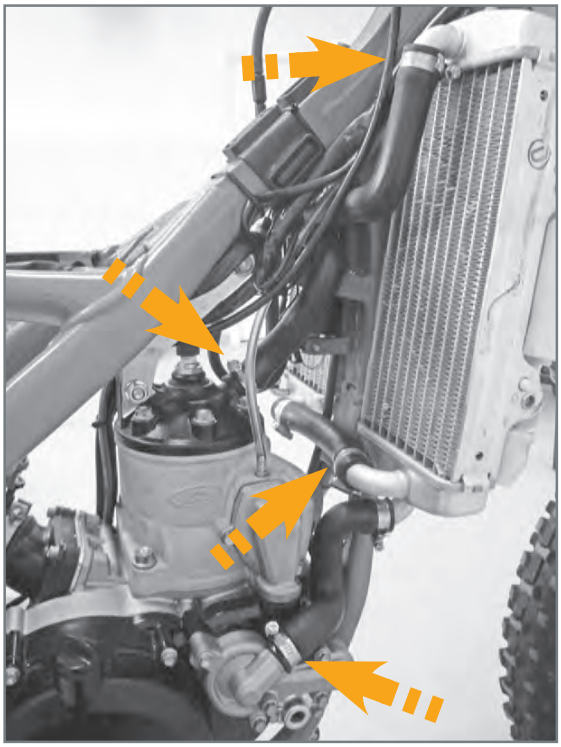

- Apply the right radiator, relative screws to be fastened at 10Nm and the protective grid.
- Connect the radiators to the engine. Fasten the clamp straps and introduce the coolant liquid, letting the air bleed through the screw cap **A**.

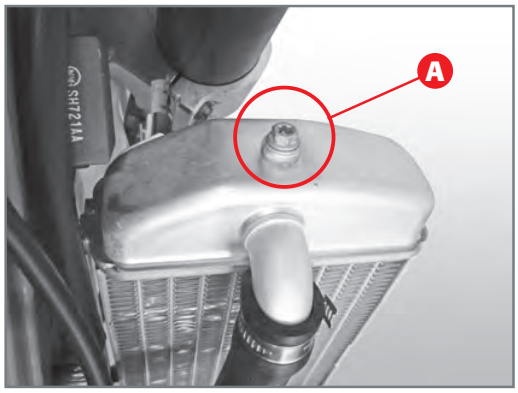

Downloaded from www.Manualslib.com manuals search engine

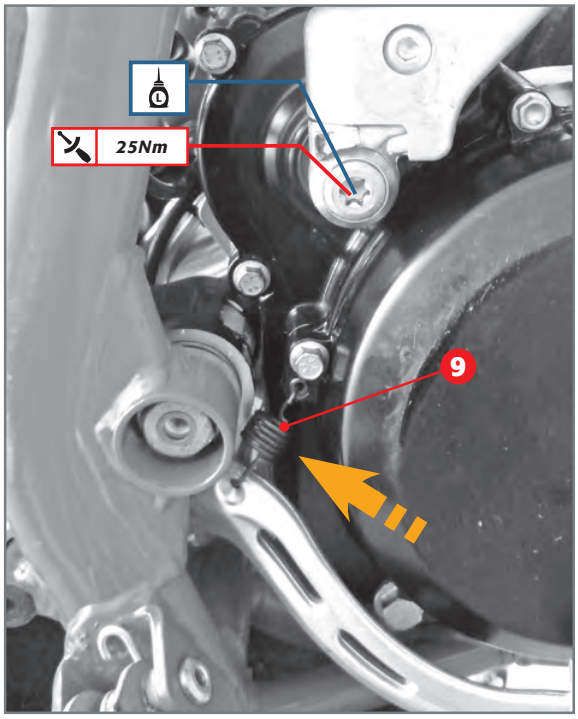

- Apply the exhaust expansion by first assembling the front springs and then applying the two fixing screws.
- Apply the spacer and fasten the two fixing screws at 10Nm. Fasten the expansion fixing screws to the frame at 10Nm.

- Apply the Kickstart lever. Apply the medium-resistance sealant threading on the screw and fasten at 25Nm. Apply the brake pedal return spring **9**.

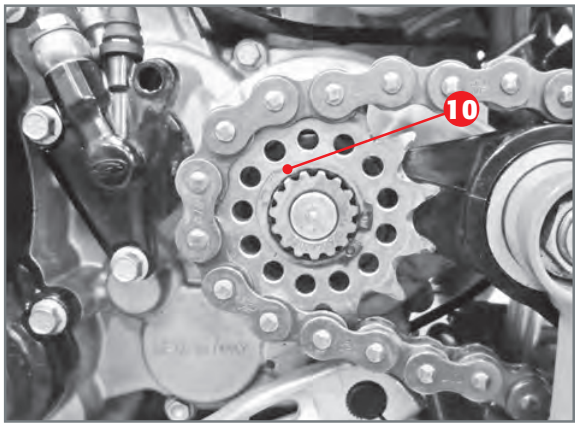

- Insert the pinion in the chain and fasten it onto the gearbox outlet shaft. Assemble the relative circlip **10**, checking its in its seat.

- Apply the pinion guard **11** and the frame side guards **12** and **13**. Fasten the screws at 10Nm and apply the fixing straps between the side guards and frame.

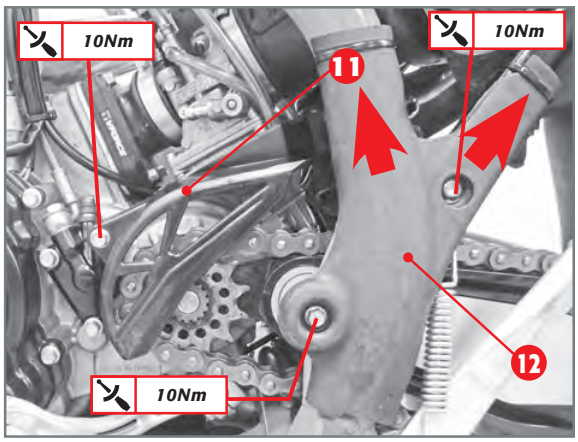

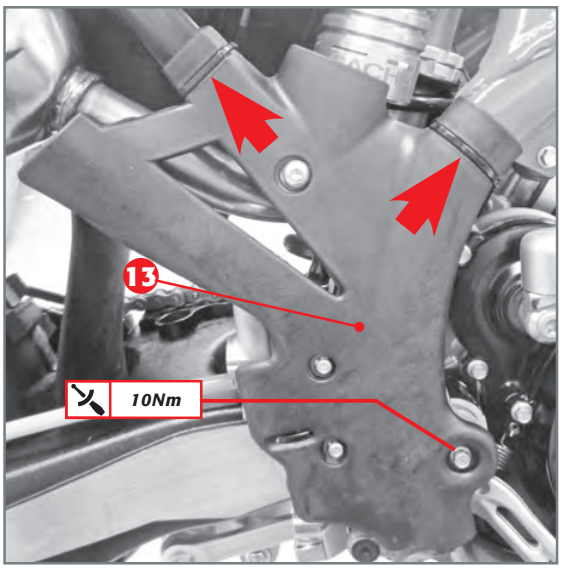

Downloaded from www.Manualslib.com manuals search engine

· Apply the tank making sure the gas cable is between the tank and frame.

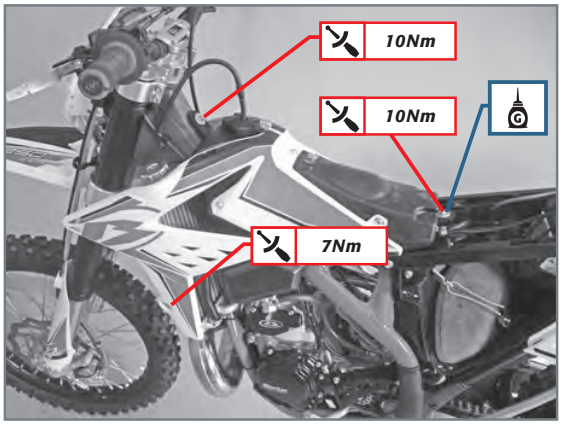

· Grease the rear fastener and tighten the screws at the indicated torque values.
· Apply the seat.

Attention! *Disconnecting the mixer tube from the intake manifold could cause air to get into the tube itself. To avoid any lubrication problems with the thermal unit and crankshaft, use fuel with a 1% blend for the first fill-up.*
Use the oil recommended on page 107 in the "Recommended lubricants and liquids" table.

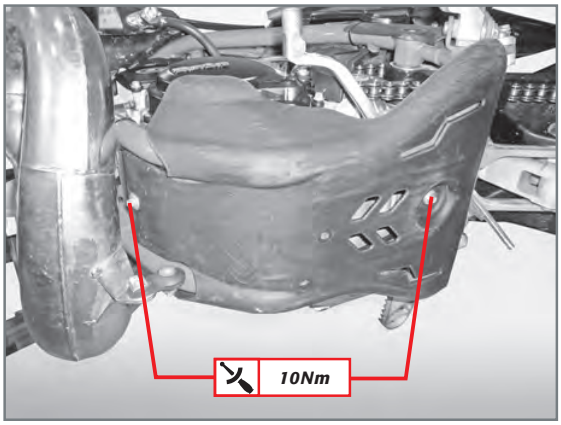

· Reconnect the tank to carburetor fastening the tube using the specific clamp straps.
· Apply seat and filter box side.
· Reapply the paramotor plate with the two fixing screws, once the motorcycle is removed from the stand. Fasten at 10Nm.

Downloaded from www.Manualslib.com manuals search engine

TABLE OF FASTENING TORQUES OF ENGINE COMPONENTS

Fixing	Diameter x Length	Quantity	Threadlocker	Torque [Nm]	Notes
Outer side right crankcase half					
Kickstart ramp	M6 x 20	2	Loctite 243/ Sichel 100M	10	
Inner side right crankcase half					
Desmodromic control bearing fixing	M5 x 8	1	Loctite 243/ Sichel 100M	6	
Gearshift					
Stop cam	M6 x 30	1	Loctite 243/ Sichel 100M	10	
Stopping device lever	M6 x 20	1	Loctite 243/ Sichel 100M	10	
Gearshift lever	M6 x 25	1	Loctite 243/ Sichel 100M	10	
Electrical kickstart device					
Start motor	M6 x 20	2	Loctite 243/ Sichel 100M	10	
Clutch main transmission					
Main transmission pinion nut		1	Loctite 243/ Sichel 100m	160	
Drum nut and clutch case		1	Loctite 243/ Sichel 100m	120	Do not use the pneumat-ic device
Clutch cap	M6 x 25	4		10	
Clutch actuator	M6 x 20	2		10	
Clutch actuator	M6 x 30	1		10	
Outer clutch cover	M6 x 20	2		10	
Outer clutch cover	M6 x 50	3		10	In common with inner clutch cover
Inner clutch cover	M6 x 20	2		10	
Inner clutch cover	M6 x 30	2		10	
Inner clutch cover	M6 x 50	3		10	In common with outer clutch cover
Inner clutch cover	M6 X 60	2		10	In common with water hose cover
Water pump					
Cover	M6 x 60	2		10	In common with inner clutch cover
Cover	M6 x 30	2		10	
Impeller	M5 x 12	1	Loctite 243/ Sichel 100m	6	

Downloaded from www.Manualslib.com manuals search engine

Fixing	Diameter x Length	Quantity	Threadlocker	Torque [Nm]	Notes
Exhaust valve control					
Cover	M5 x 20	2	Loctite 243/ Sichel 100m	6	
Complete control rocker arm	M5 x 12	1	Loctite 243/ Sichel 100m	6	
Control lever	M5 x 20	1	Loctite 243/ Sichel 100m	6	
Booster bearings	M6 x 16	2	Loctite 243/ Sichel 100m	10	
Right cover	M5 x 16	3		6	
Left cover	M5 x 16	4		6	
Ignition system					
Spark plug	M14 x 1,25	1		28	
Pick-up	M5 x 12	2	Loctite 243/ Sichel 100m	6	
Stator	M6 x 25	2	Loctite 243/ Sichel 100m	10	
Flywheel nut		1	Loctite 243/ Sichel 100m	60	
Cover	M6 x 20	2		10	
Cover	M6 x 25	3		10	
Cylinder					
Cylinder nuts		4		30	
Head					
Head screws	M8 x 35	6		27	
Crankcase half					
Crankcase half screws	M6 x 50	10		10	
Crankcase half screws	M6 x 40	3		10	
Intake					
Reed valve (300cc)	M6 x 28	4		10	
Reed valve (250cc)	M6 x 25	4		10	

Downloaded from www.Manualslib.com manuals search engine

TABLE OF FRAME/MOTOR FASTENING TORQUES

Fixing	Diameter x Length	Quantity	Threadlocker	Torque [Nm]	Notes
Front and lower engine connections	M10 x 1.25	2		45	
Swingarm pin	M16 x 1.5	1		125	
Head connection bracket to front frame	M8 x 20	2	Loctite 243/ Sichel 100m	35	
Head connection brackets to rear frame	M8 x 16	2	Loctite 243/ Sichel 100m	35	
Head connection brackets to motor	M8 x 65	1		35	

TABLE OF SUPERSTRUCTURE FASTENING TO RQUE VALUES

Fixing	Threading diameter x worm [mm]	length [mm]	Quantity	Threadlocker	Torque [Nm]	Notes
Tank on the frame (fixing on the front)	M6 x 1	25	1		10	
Tank on the frame (fixing on the back)	M6 x 1	30	1		10	Apply grease
Side panel of tank on the radiator	M6 x 1	20	2		7	

Downloaded from www.Manualslib.com manuals search engine

RECOMMENDED MOTOR MAINTENANCE

The requested engine maintenance only depends on the level of use and respect of the periodical inspections. The following intervals refer to a competitive use, as long as the engine has not worked in extraordinary conditions and that periodical inspections and interventions have been correctly carried out.

	30h	60h	90h
Coated clutch discs	I	-	S
Clutch springs length	I	-	S
Gearbox bearings	-	-	S
Case/clutch hub	I	-	-
Cylinder	-	I	-
Piston and segments	-	S	-
Connecting rod	-	-	S
Crankshaft bearings	-	-	S
Gearbox superficial look	-	-	I
Water hose oil seal	-	-	S
Exhaust valve	-	I/P	-
Reed valve	-	I	S
Spark plug	-	S	-

I = INSPECT AND REPLACE, IF REQUIRED *S = REPLACE* *P = Cleaning*

RECOMMENDED LUBRICANTS AND LIQUIDS

APPLICATION	PRODUCT	QUANTITY
Gearbox and clutch	Liqui Moly racing 10W40	850ml*
Coolant liquid	Liqui Moly coolant ready mix raf12 plus	1300ml*
Mixer tank	Liqui Moly 2-STROKE MOTOR OIL, SELF-MIXING	550ml
Fuel tank (only for running in)	Liqui Moly 2-STROKE MOTOR OIL, SELF-MIXING	1% blend

** Refer to Use and Maintenance Manual for levels*

Downloaded from www.Manualslib.com manuals search engine

BETAMOTOR S.P.A.
PIAN DELL'ISOLA, 72
50067 RIGNANO SULL'ARNO (FIRENZE) ITALIA
INFO@BETAMOTOR.COM WWW.BETAMOTOR.COM

Downloaded from www.Manualslib.com manuals search engine