SERVICE MANUAL

SF-50 (Baboon)

(≦ 45km)

High power Engine

HER CHEE INDUSTRLAL CO., LTD.

INTRODUCTION

This Service Manual is provided as the technical information for the check & preparation of ADLY SF-50（≦ 45km） scooter, and the direction edited is given in diagrams with "Operation Sequence", "Key Points", and "Adjustment of Check" for reference of the service staffs.

This Service Manual is finished in accordance with the model of SF-50（≦ 45km）. Taking new model as standard if there are differences between the model described in this manual and the actual scooter.

HER CHEE INDUSTRIAL CO., LTD.

CONTENTS

Chapter

Information for Preparation..... 1
Diagnose of Brake Down.....… 1
Check & Adjustment..... 2

Engine -

Installation of Lubrication 3
Fuel system 4
Engine assembling/disassembling 5
Cylinder head, Cylinder, and Piston 6
Starter / Driving Wheel 7
Clutch / Driven Wheel Assembly 7
Final Transmission Mechanism 8
Crank Shaft Case, Transmission Box 9

Chassis -

Front Wheel, Front Suspension, Front Brake 10
Rear Wheel, Rear Suspension, Rear Brake ….....11
Electrical Device 12
Wiring Diagram 13

INFORMATION FOR PREPARATION

Attention on Operation

- All washers, oil rings, clamp rings, opening pins shall be duly replaced by a new item when dismounted.

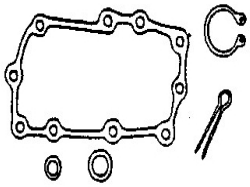

- Locking of all screws, nuts, cross screws shall be performed in the order of first the large screws and then the small ones and from inside to outside in opposite angles by tightening the torque locks.

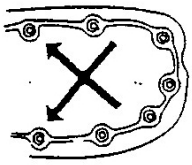

- All items must use original parts, pure oil and greases.

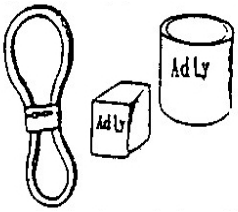

- All service shall use special tools and general tools to repair.

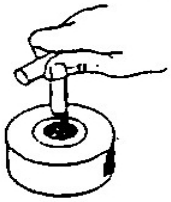

- All dismounted items requiring for checks shall be duly cleaned and for assembly, all items shall be duly lubricated.

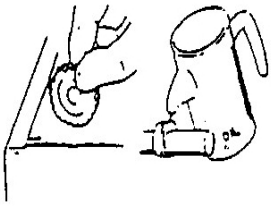

INFORMATION FOR PREPARATION

Attention on Operation

- Certified lubricants in cans shall be used on all the elements to be lubricated.

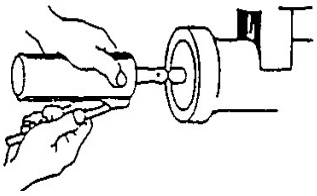

- After assembly, performance of all elements shall be duly checked and the locking shall be duly verified.

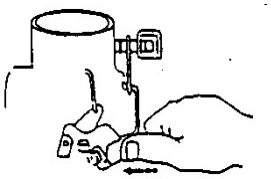

- In case of an operation is performed by over 2 people, the assignment shall be conducted in coordination and safety shall be the first priority.

- Definition of signs:

The sign given in the Service Manual shall refer to the operation methods and observation.

OIL: Lubrication by designated lubricant.

GREASE: Lubrication by grease

Special Tool: Parts on which special tools shall be used

General Tool: General tools shall be used

New: Replace by new items after dismounting

Attention

Dangerous and important operations

SPECIFICATION

TYPE	SF-50	SF-100
LENGTH	1730 mm	1730 mm
WIDTH	680 mm	680 mm
HEIGHT	1100 mm	1100 mm
WHEEL BASE	1220 mm	1220 mm
NET WEIGHT	75 kg	75 kg
ENGINE TYPE	2-STROKE, Single Cylinder	2-STROKE, Single Cylinder
COOLING	AIR COOLED	AIR COOLED
DISPLACEMENT	49.26 C.C.	95.57 C.C.
BORE×STROKE	40.0×39.2	52×45
COMPRESSION RATIO	7.2:1	5.8:1
IGNITION	C.D.I	C.D.I
STARTER	ELECTRIC / KICK	ELECTRIC / KICK
SUSPENSION	Hydraulic Shock Absorber	Hydraulic Shock Absorber
TRANSMISSION	AUTOMATIC	AUTOMATIC
TIRE FRONT/REAR	Front 120/90-10 Rear 130/90-10	Front 120/90-10 Rear 130/90-10
FRONT BRAKE	Disc	Disc
REAR BRAKE	Drum	Drum

LOCKING TORQUE

Adopt the standard torque locking for the item unlisted.

STANDARD TORQUE：

Type	Locking Torque (kg-m)
5 mm Screw	0.4
6 mm Screw	1.0
6 mm Hex Washer Face Bolt / Nut	1.2
8 mm Hex Washer Face Bolt / Nut	2.7
10 mm Hex Washer Face Bolt / Nut	4.0

CHASSIS：

Locking Place	Quantity	Dia. (mm)	Locking Torque (kg-m)
Spanner Nut of Handle Steering Steam	1	25	7.0
Front Wheel Axle Nut	1	10	4.5
Rear Axle Nut	1	14	11
Rear Brake Arm Screw	1	5	0.6
Upper Screw of Rear Shock Absorber	1	10	4.0
Lower Screw of Rear Shock Absorber	1	8	2.7
Engine Mounting Bracket	1	8	6.0

ENGINE：

Locking Place	Quantity	Dia. (mm)	Locking Torque (kg-m)
Screw of Cylinder Cap	4	6	1.0
Flywheel Nut	1	10	3.8
Clutch Jacket Nut	1	11	3.8
Driving Disc Nut	1	28	5.5
Nut of Transmission Disc	1	10	3.8
Oil-check Screw	1	8	1.3
Joint Screw of Exhaust Manifold	2	6	1.2
Exhaust Pipe Support Screw of Muffler	2	6	1.2
Spark Plug	1	14	1.4
Bolt of Crank Shaft Case	6	6	10
Bolt of Engine Installation	1	8	5.0

INFORMATION FOR PREPARATION

The following drawing that shows the disassembling situation of the cover parts for SF 50/100 scuuter.

INFORMATION FOR PERPARATION
DIFFICULT START OR CANN'T START

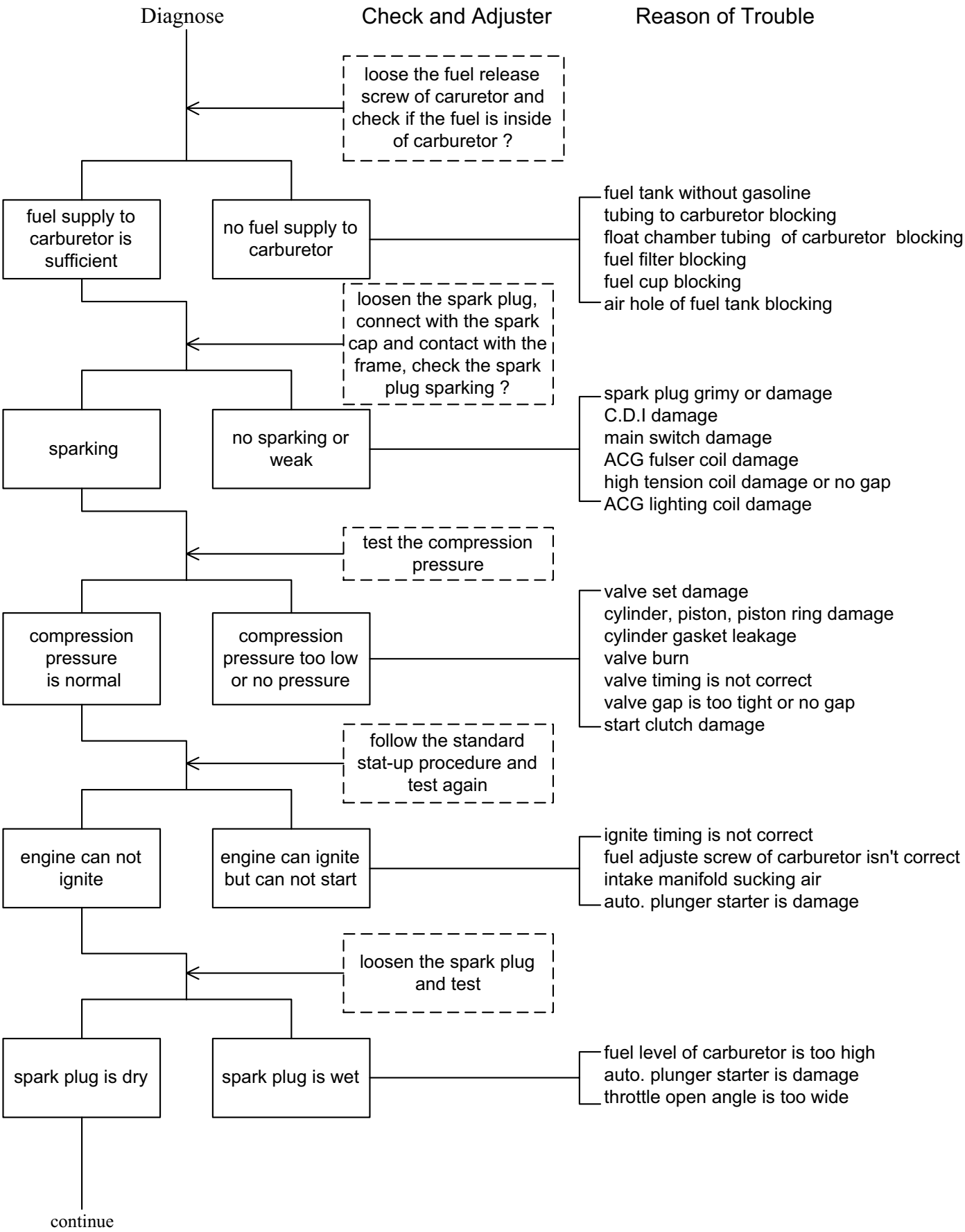

INFORMATION FOR PREPARATION
REVOLUTION NOT SMOOTH , LOST POWER

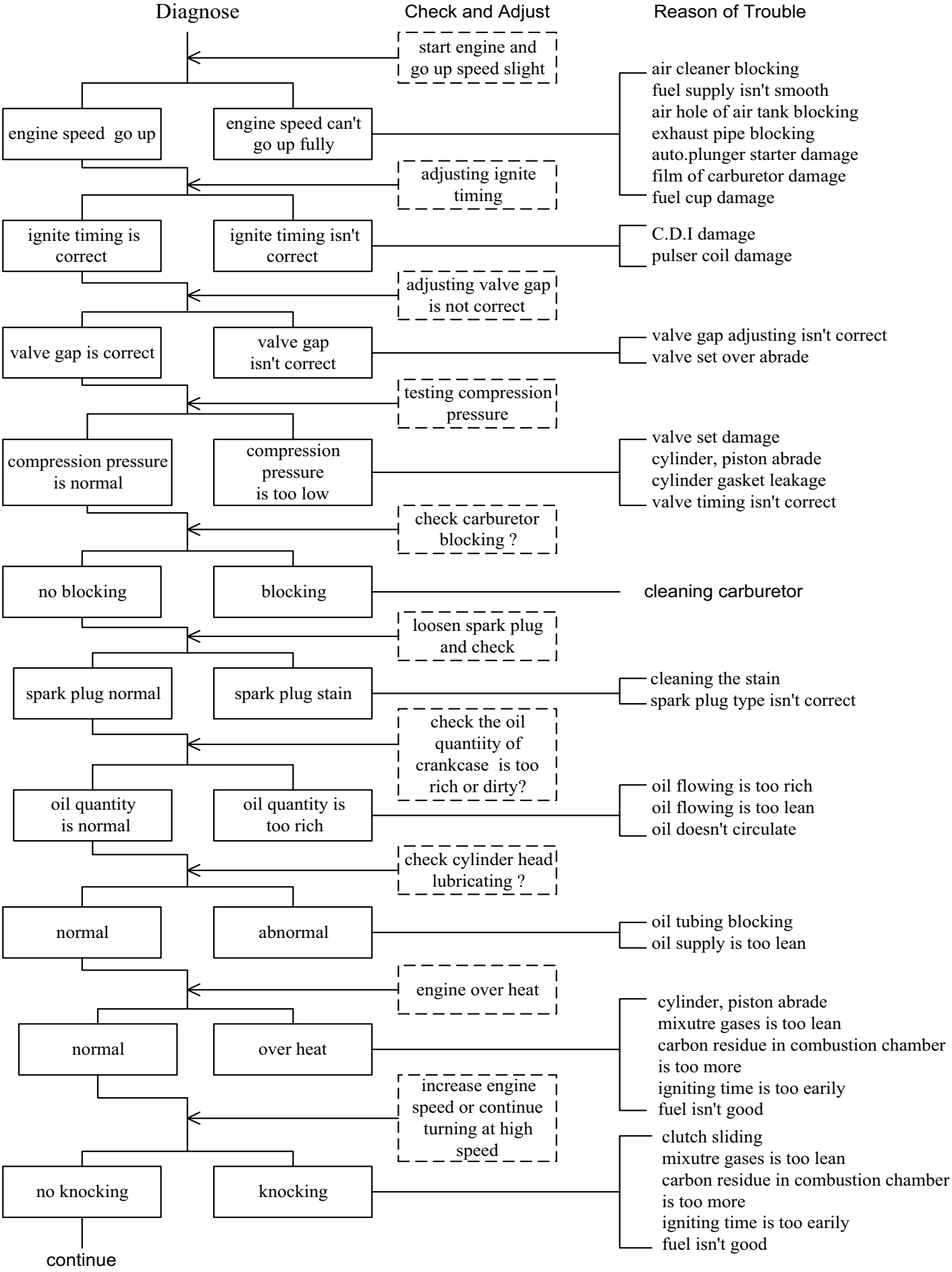

INFORMATION FOR PREPARATION
REVOLUTION NOT STABLE (LOW R.P.M.)

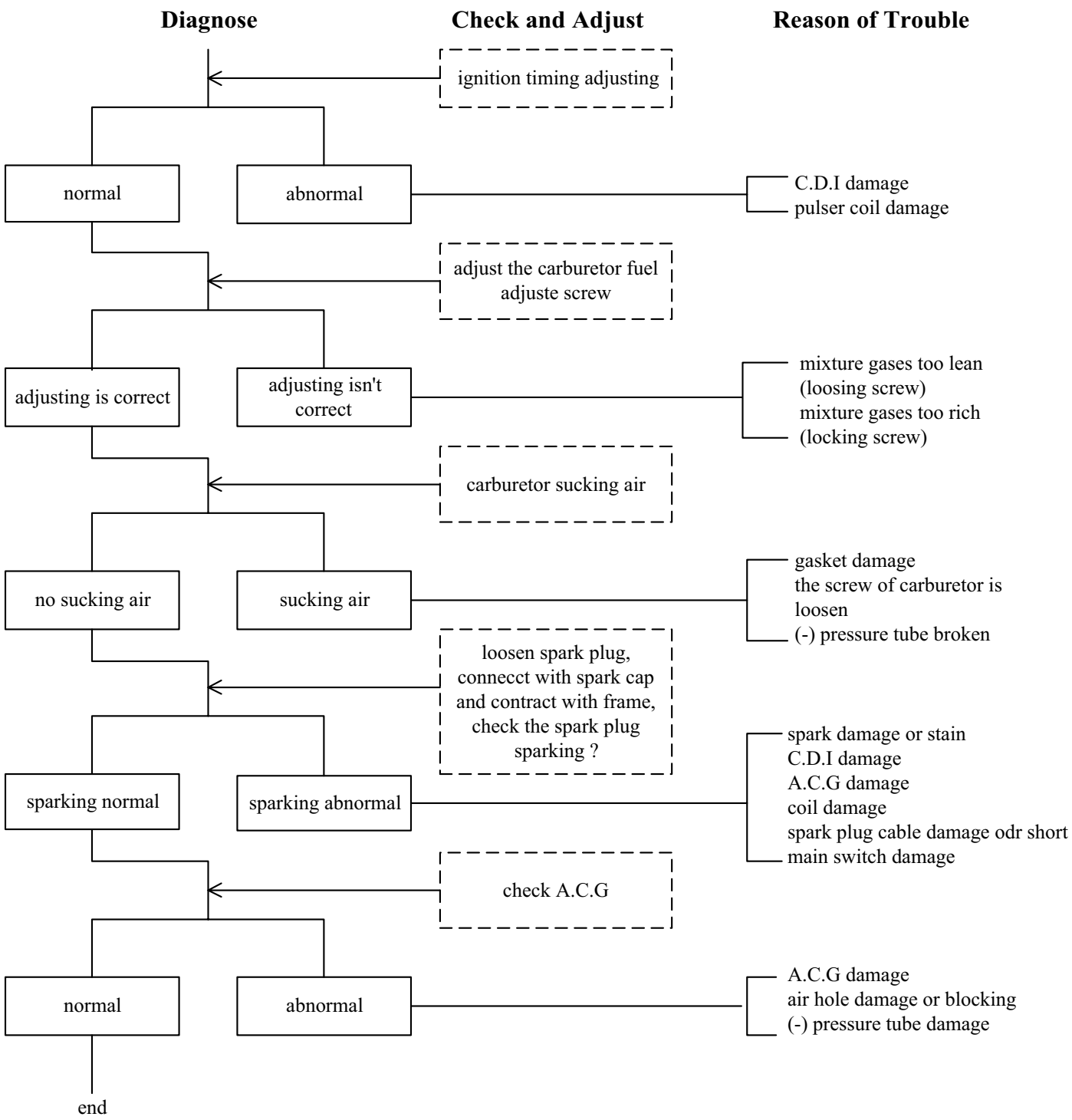

INFORMATION FOR PREPARATION
REVOLUTION NOT SMOOTH(HIGH SPEED)

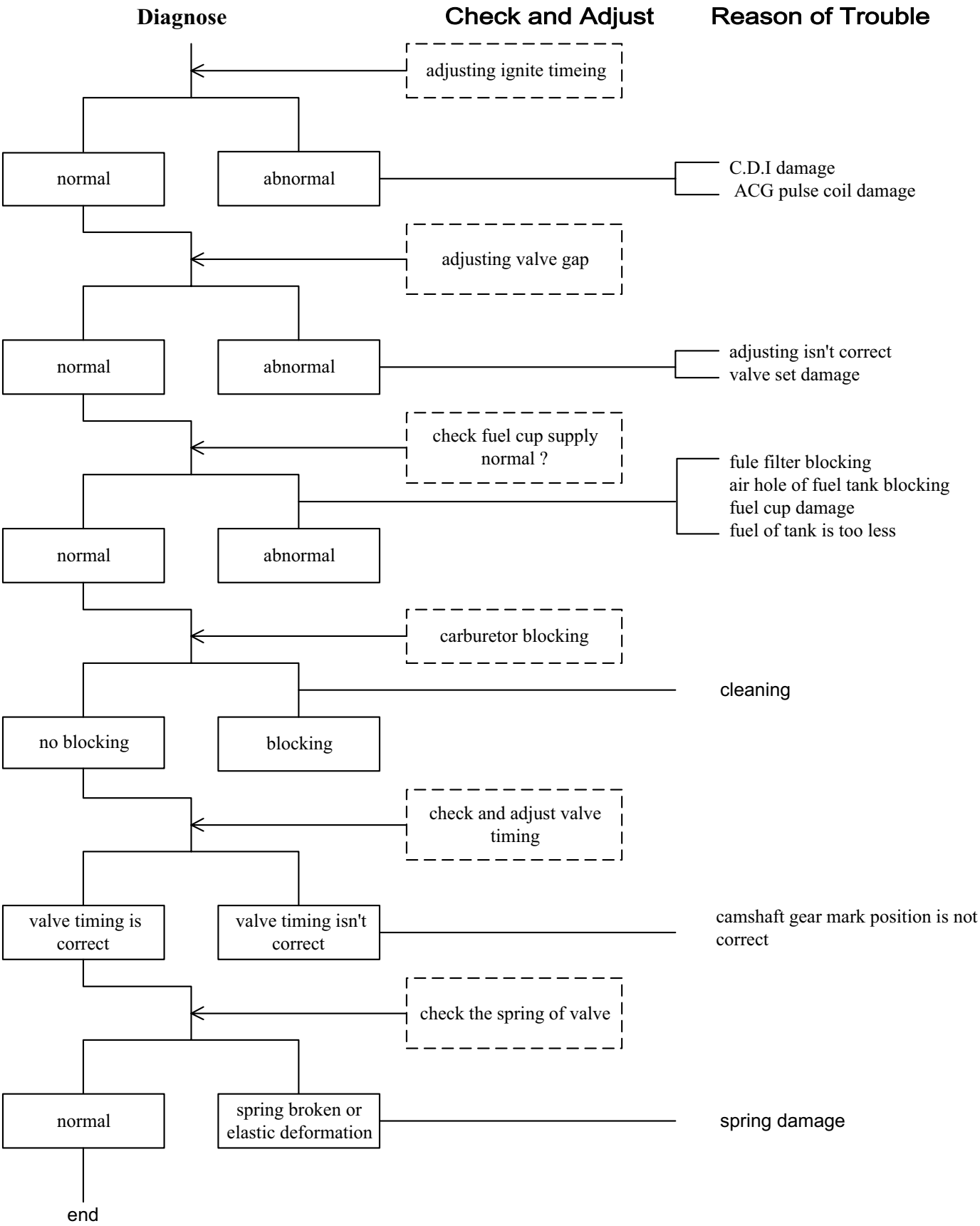

INFORMATION FOR PREPARATION
CHARGE ABNORMAL

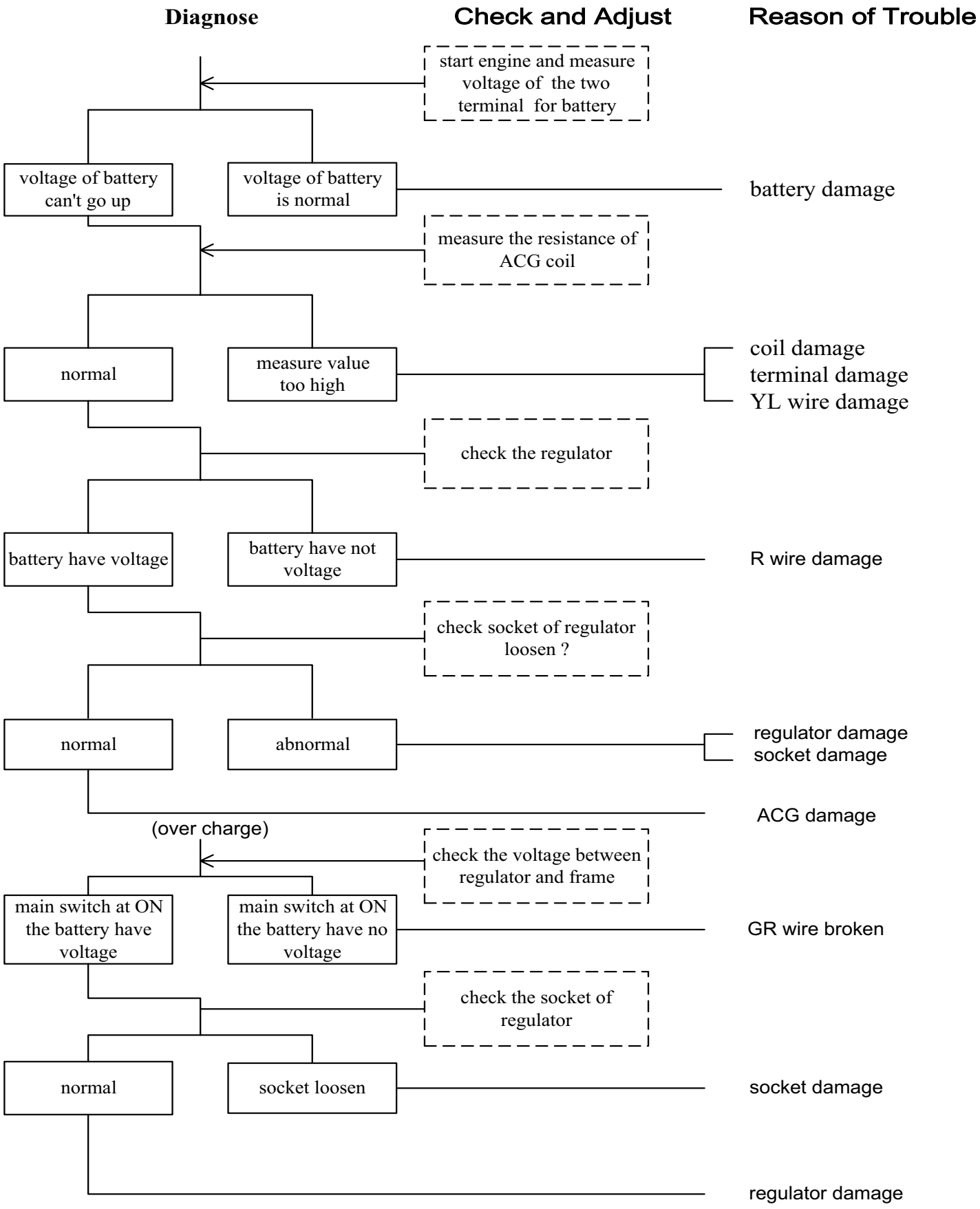

INFORMATION FOR PREPARATION
SPARK PLUG NO SPARKING

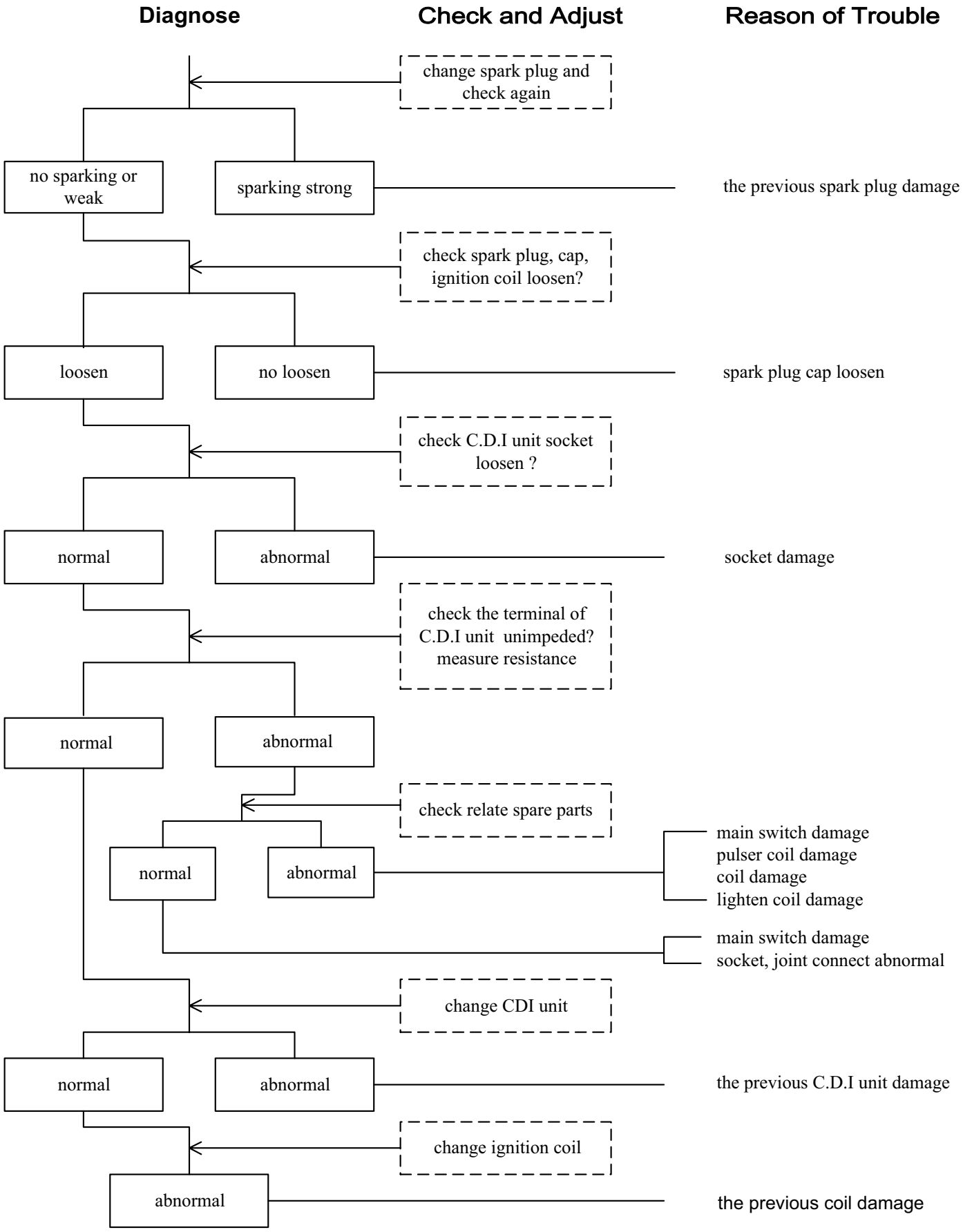

2. CHECK AND ADJUST

Way of Check and Service……2-1
Disassembly of External Parts……..2-3
Layout of Maintenance Items……2-6

Way of Check & Adjustment

1. Mark "○ " is checking time.

2. Mark "☆" is the regular exchange of service items.

This exchange time is just for general riding of the majority not for the special use, please arrange with this principle according to the difference of the riding condition.

Service Items	Service Time (month)				Judgement Standard	Remarks
	Before riding	1st	each 6	each 12		
Operating Device						
Handle- Play, loose/tight				○		
Operation				○		
Wheels- Right/left turn round angle				○		
Front Fork-Damage			○	○		Direction Post
Installation of shaft			○	○		Direction Post
Shaft Gap				○		
Brake Device						
Brake- Play			○	○		
Try to run	○		○	○	Play of brake lever 10-20 mm	
Correct brake	○	○	○	○		
Wires- Loose / tight and damage		○	○	○		
Gap of casing & brake			○	○		
Wore of brake & operating parts				○		Direction

Wore & Damage of casing				○	Standard diameter 110 mm Limitation 110.5mm		
Riding Device						front	rear
Tires-Air pressure of tires	○	○		○	Air pressure	1.50 kg/cm^2	1.75 kg/cm^2
					tire	120/90-10	130/90-10

Service Items	Service Time (month)				Judgement Standard	Remarks
	Before riding	1st	each 6	each 12		
Riding Device						
Tires Check & damage of tires	○		○	○	Ditch-front and rear wheel till 0.8 mm	
Abnormal & ditch in tires	○		○	○		
Bolt & nut of tires locking			○	○	Flocking torsion Front wheel – 4.0~5.0 kg-m Rear wheel –10~12 kg-m	
Damage of wheels ,disc		○	○	○	Vibration of wheel Front wheel – horizontal under 3 mm, vertical under 3 mm, Rear wheel – horizontal under 3 mm, vertical under 3 mm	
Tightness of front bearing				○		
Tightness of rear bearing				○		
Suspension device						
Spring -damage				○		Spring of shock absorber
Suspension arm – damage of joint gap & arm				○		
Tightness of installation				○		
Power transmission device						
Clutch -action		○	○	○		
Crankcase oil leakage or damage				○		

Transmission gear oil			○	○		
Electric device						
Ignition device -condition of ignition spark plug			○	○	Gap of spark plug 0.6~0.7 mm	
Battery -connection of terminal				○		
Wiring of electrical appliance – damage or loose in connection place				○		

Service Items	Service Time (month)				Judgement Standard	Remarks
	Before riding	1st	each 6	each 12		
Engine						
Body – starting & abnormal noise			○	○		
low speed & accelerating		○	○	○	Idle : 1800±100 rpm	
exhaust			○	○		
air filter			○	○		
Lubrication device						
Oil and oil filter			○	○	Warning light lighting	
Oil leakage			○	○		
Fuel installation						
Gasoline filter is dirty				○		
Leakage of fuel			○	○		
Throttle gate & choke				○		
Fuel filter is clogged				○		
Oil level	○					
Alteration of pipes					each 2 years	
Lights & direction lights						
Action			○	○		
On/off normal , dirty , damage	○					

Rear view mirror	○			○		
Instrument –action				○		
Exhaust pipe & muffler						
Installation loosed or damage				○		
Function of muffler				○		
Frame & body –loose or damage				○		
Abnormal from previous day –confirm normal	○					
Others - greasing of each part			○	○		
Cleaning combustion chamber , exhaust pipe , and carbon muck in muffler				○		

Disassembly of External Parts

Remove the external parts for checking and adjustment

Read cover

* Open the seat.
* Remove the 2 hex-nuts, 1 bolt to remove the luggage rack.
* Remove 10 self-tapping screws and 2 round-headed bolts..
* Remove the central and body cover
* Install with reverse sequence.

**** ATTENTION :***

- Please do keep away the unit of the body and the pedal from damages.
- Before tightening the screws, be sure of correct matching of all units.

Cowling

* Remove 4 tapping screws and 2 round-head bolts.
* Separate the joint of inner parts and remove the cowling.
* Install with reverse sequence.

Front Cover

* Remove 4 tapping screws and 3 hex-nuts.
* Separate the joint of inner parts and remove the cowling.
* Install with reverse sequence.

**** ATTENTION :***

- Be sure of not damaging the front pane land the front inner union (the convex and concave portions).
- While tightening the screws, be sure of the matching with the luggage case.

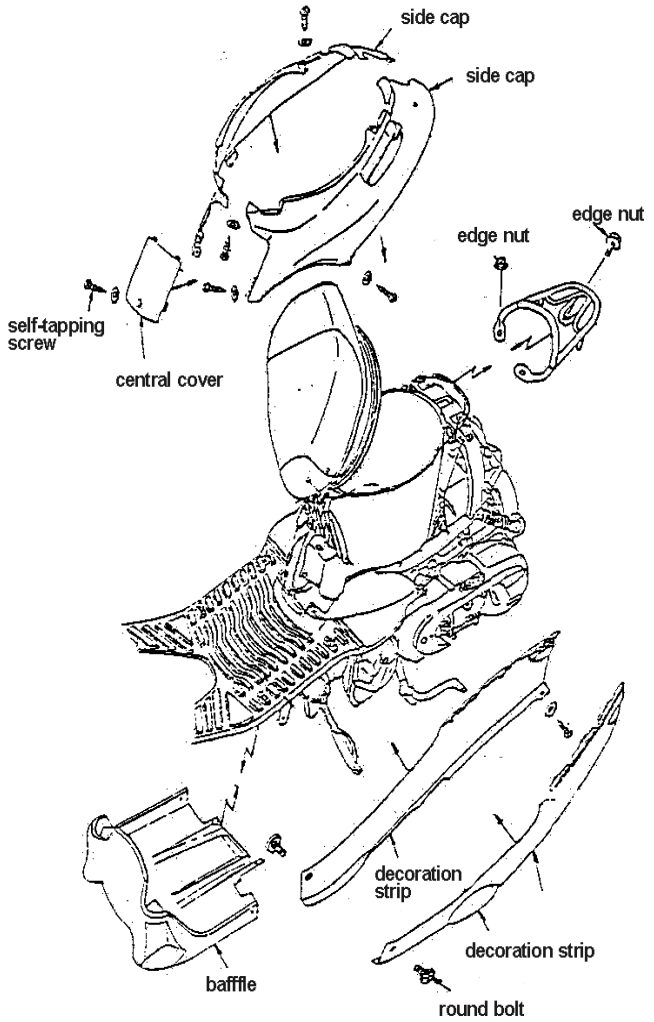

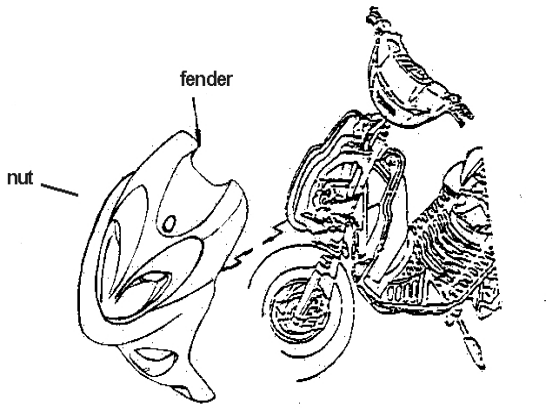

Remove the L/R side cover and body cover.

* Remove 4 hex bolts.
* Separate the front interior covering joint (the claw and the groove) and remove the pedal.
* Follow the sequence in reverse order for assembly.

Floor panel

*

*** ATTENTION :***

- After joining the pedal and the front interior covering, mount it onto the chassis.

Luggage case

* Open the luggage case cover.
* Remove 4 tapping screws and 1nut, separate the join with the chassis (the concave and the convex) and remove the front cover.
* Remove the main switch cap.
* Follow the sequence in reverse order for assembly.

*** ATTENTION :***

- Be sure the joint of front cover and cowling jointing correctly before tie-up the screws and nuts.

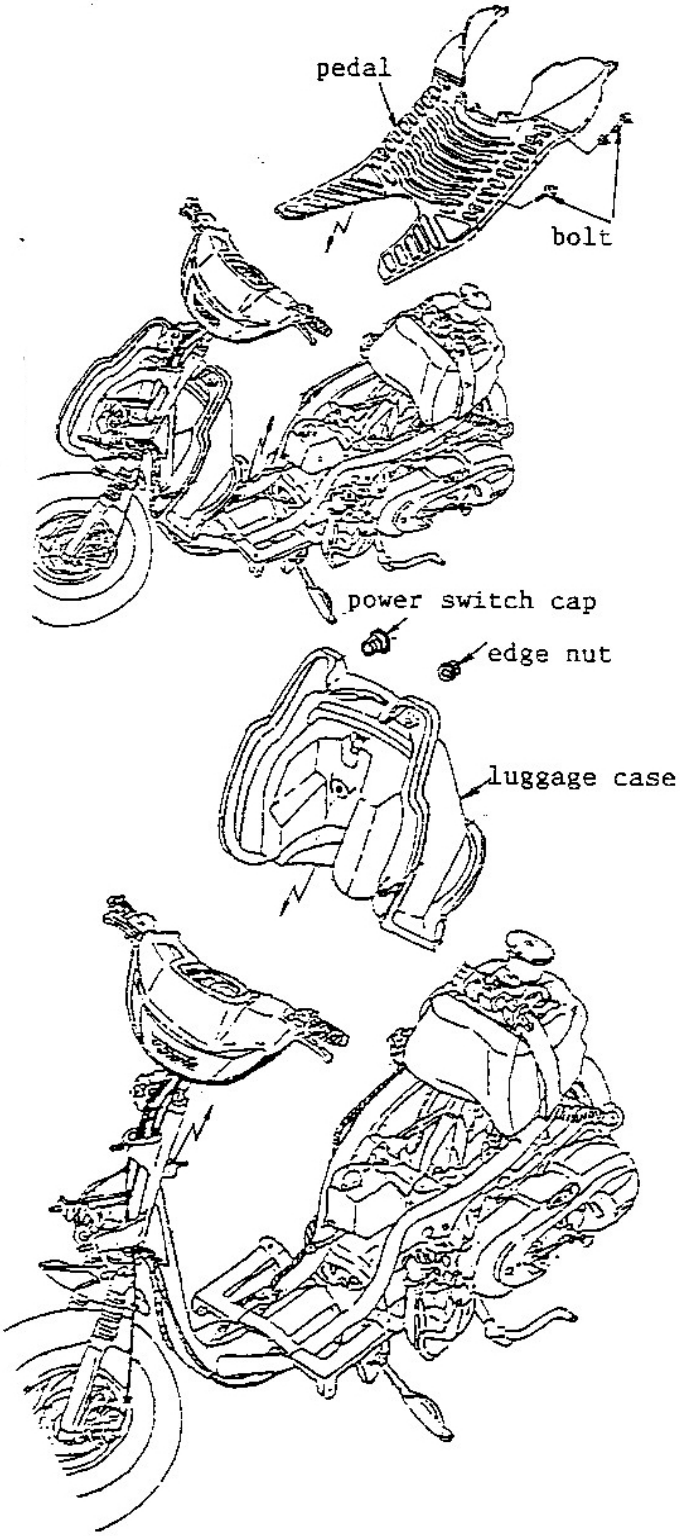

Tail light assembly

* Remove 2 hex bolts and rear fender assembly.
* Remove the left and right body covers.
* Remove 2 hex bolts and the tail light assembly.
* Follow the mounting sequence in reverse order.

**** ATTENTION :***

- Match the rear guard holes and the convex of the chassis.

Handle covering

* Remove the rear mirror
* Remove 3 tapping screws, separate the joint from the handle rear cover and remove the cover.
* Dismantle the speedometer cable adapter.
* Remove the speedometer and head light assembly.
* Dismantle the handle switch wiring.
* Follow the reverse sequence for ass'y

**** ATTENTION :***

- Matching the joint of handle cover with the head light case.
- Load the cables and wires accordingly.
- After the assembly, check the function of all switches.

Adjustment of the head light

* Adjustment of the beam of the head light is by loosening the screw underneath the head light

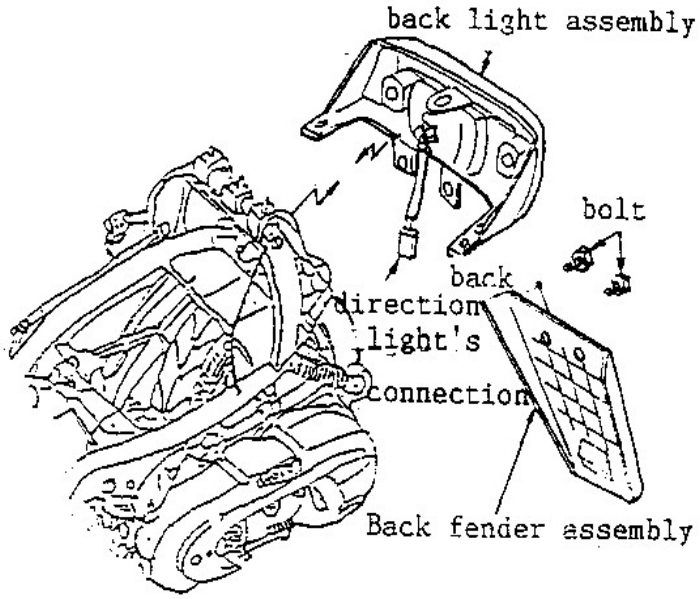

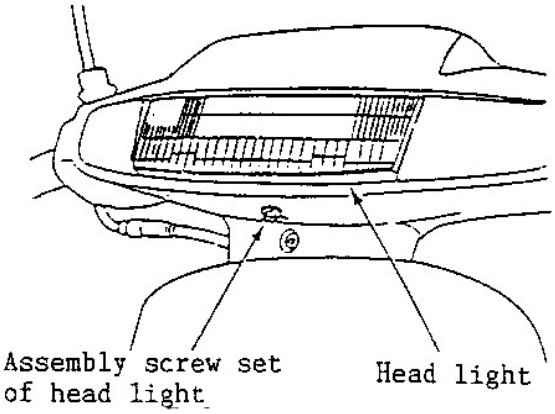

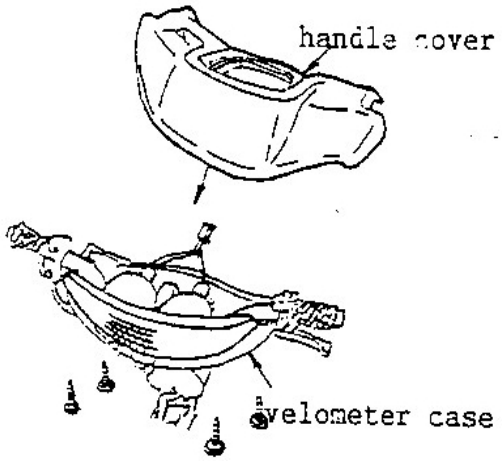

Serviceable parts layout

The drawing shows the main serviceable parts.

Serviceable parts layout

The drawing shows the main serviceable parts.

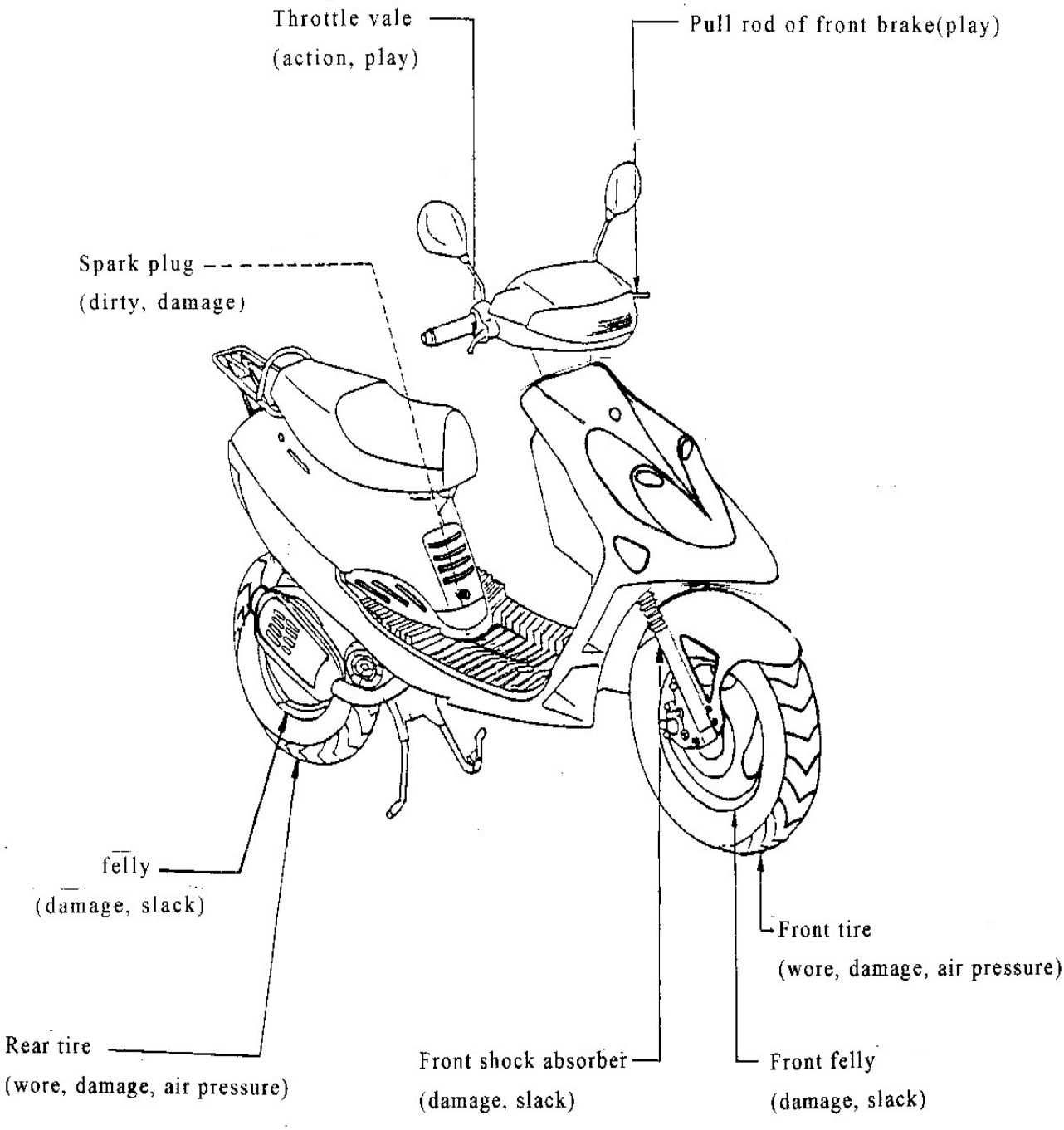
Throttle vale
(action, play)
Pull rod of front brake(play)
Spark plug
(dirty, damage)
felly
(damage, slack)
Front tire
(wore, damage, air pressure)
Rear tire
(wore, damage, air pressure)
Front shock absorber
(damage, slack)
Front felly
(damage, slack)

3. INSTALLATION OF LUBRICATION

Attention of Operation

· Pay attention to avoid dust enter to the interior of engine and motor oil pipe when disassembly the motor oil pump.

· Never disassembly motor oil pump.

· Must draw out the air on the pump if there have air in the pump when disassembly pipe of carburetor.

· After disassembling the motor oil connection tube, must fulfill the motor oil in the connection pipe, then, connect the tube.

Diagnosis of Troubles

Too much smoke, means too much carbon muck piping up the spark plug.

· Poor synchronizing adjust of motor oil pump (too much exhaust).

· Bad quality of engine motor oil.

Over heating

· Poor synchronizing adjustment of motor oil pump (too much exhaust).

· Bad quality of engine motor oil.

Piston burnt

· Short of engine oil, or engine oil pipe is clogged.

· Poor adjustment of motor oil pump (lesser the exhaust).

· There have air in the motor oil pipes system.

· Bad motor oil pump.

Clogging oil from oil tank

· Vent of motor oil case's cap is clogged.

· Filter of motor oil is clogged.

Preparation standard

· Use separating motor oil appointed (use for 2-stroke).

· Content of motor oil tank : 1.1 liter

Dismounting of Oil Pump

* Remove the R side body cover and helmet box.
* Remove the cooling fan cover and cylinder head cover.

**** WARNNING:***

Operating after cleaning motor oil pump around and no dirt enter into the crankcase.

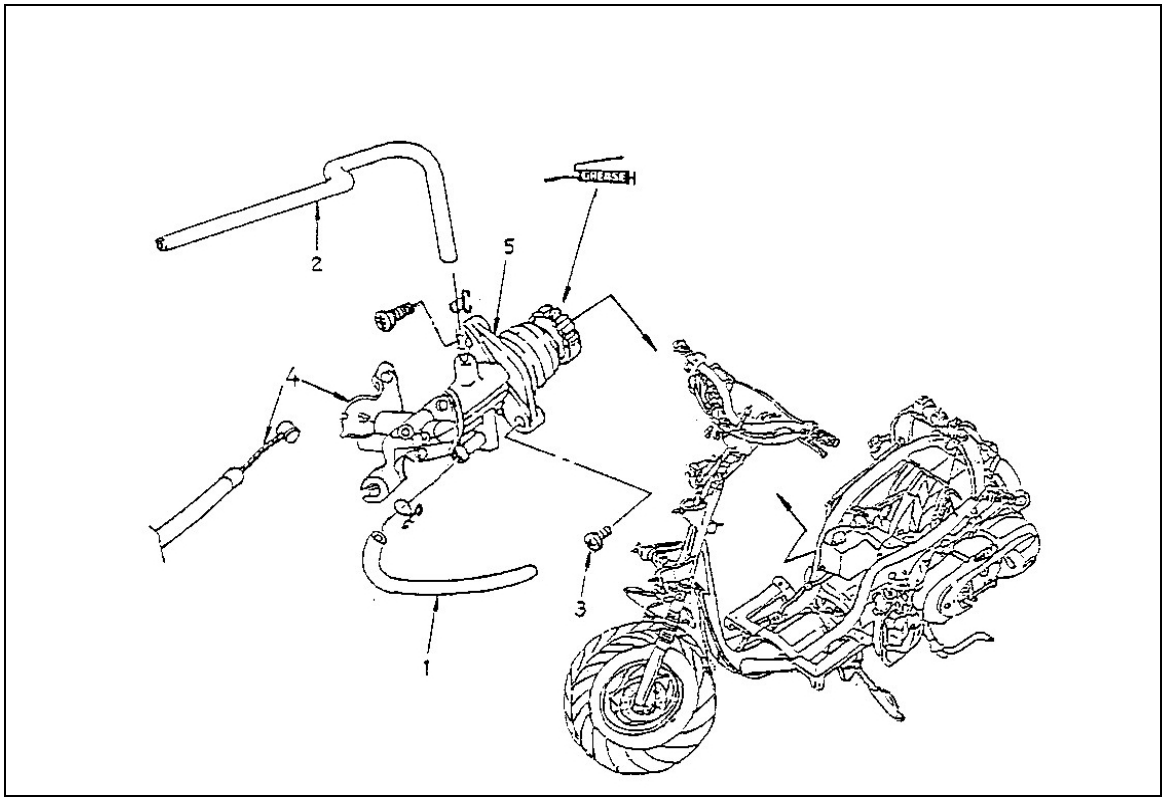

Operation / Parts Name		Q'ty	Remarks
1	Fuel pipe	1	* ***WARNNING:*** Clogging the pipe with clamp or plug for avoiding fuel flow out.
2	Oil connection pipe	1	• Remove from both side of motor oil pump.
3	Pan phillips bolt	2	
4	Motor oil pump	1	
Assembly 4→1			• Assembly with sequence in reverse of disassembly. * ***WARNNING:*** –Smear motor oil to new O ring ,then assembly motor oil pump. –The oil pump must installed correctly into crank case.

Dismounting of Oil Tank

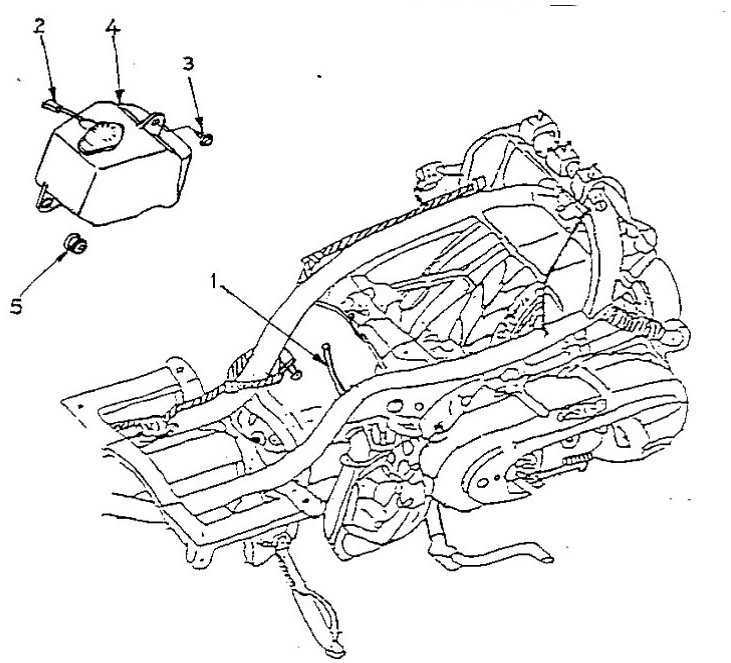

Operation / Parts Name	Q'ty	Remarks

	Disassembly		* ***WARNNING:***
1	Fuel pipe	1	Fill motor oil with clean container.
2	Fuel connection pipe	1	
3	Pan phillips bolt	2	
4	Control cable	1/1	
5	Motor oil pump	1	
	Assembly 5→1 Operation with sequence in reverse of disassembly.		* ***WARNNING:*** Connect correct oil pipe after assembly, release the air in motor oil pump.

FUEL INSTALLATION

Attention in Operation

- Pay attention to the parts which using gasoline.
- Pipes & Cable must be in accordance with the location directed of wiring diagram.
- Release air in motor oil pump when remove motor oil pipe.

Diagnosis of Trouble

No starting

- No gasoline in tank
- Gasoline blocked
- Too much fuel in cylinder
- Air filter is clogged

Idle speed unstable , of carburetor rotation not smooth

- Poor idle speed adjustment of carburetor.
- Low compression pressure
- Poor ignition system
- Bad adjustment of air adjusting screw on carburetor
- Air filter is clogged
- Poor auto side-plunger on carburetor
- Idle speed nozzle is clogged

Mixed air too thin

- Nozzle of carburetor is clogged
- Gasoline filter is clogged
- Vent of gasoline tank is clogged
- Gasoline pipe cranked, broke, clogged
- Poor action of valve of float chamber
- Gasoline level too low
- Air pipe is clogged

Mixed air too thick

- Poor action of valve of float chamber
- Gasoline level too high
- Air nozzle is clogged
- Auto side-plunger poor

FUEL INSTALLATION

Disassembly / Assembly Valve Of Throttle

- Disassembly of left body covering
- Adjustment of play of throttle
- Adjustment of reverse rotation of idle speed

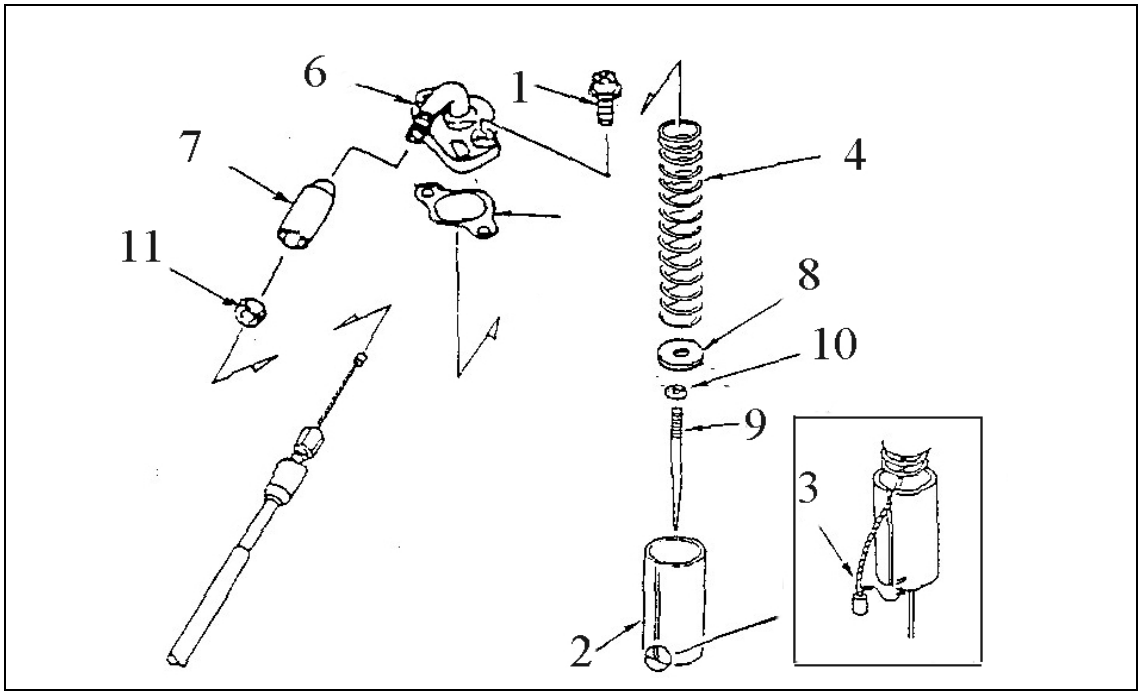

	Operation / Parts Name	Q'ty	Remarks
	Disassembly		
1	Pan phillips bolt	2	* ***WARNNING:***
2	Throttle valve	1	Loosing top cap of carburetor, and removing.
3	Throttle cable	1	
4	Throttle valve spring	1	
5	Carburetor washer	1	
6	Throttle cover(Including the reducer)	1	* ***WARNNING:*** Remove from guide wire of throttle valve.
7	Sealing set	1	
8	Washer	1	
9	Needle nozzle	1	
10	Clamp	1	
11	Adjusted screw	1	

FUEL INSTALLATION

	Operation / Parts Name	Q'ty	Remarks
	Assembly		
11	Adjusted screw	1	
10	Clamp	1	* ***WARNNING:*** Assembly of needle nozzle.
9	Needle nozzle	1	
8	Washer	1	* ***WARNNING:*** Assembly of throttle valve.
7	Sealing set of guide wire	1	
6	Throttle cover(Including the	1	* ***WARNNING:*** Assembly of throttle cable.
	reducer)	1	
5	Washer	1	
4	Throttle valve spring	1	
3	Throttle cable	1	
2	Throttle valve	1	* ***WARNNING:*** Aim the ditch of throttle valve to chamber then install throttle valve into carburetor.
1	Pan phillips bolt		Lock the throttle cover.

FUEL INSTALLATION

Disassembly of Carburetor

- Remove the air cleaner ass'y .
- Remove the left body cover

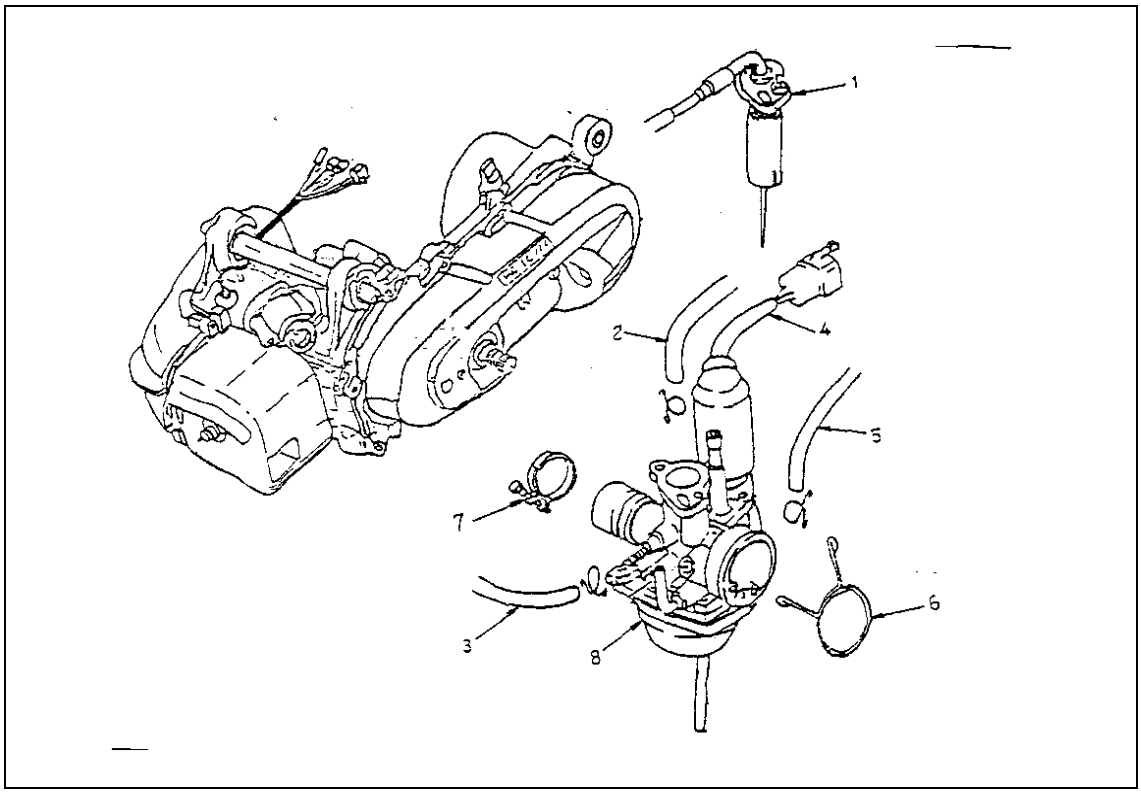

	Operation / Parts Name	Q'ty	Remarks
	Disassembly		
1	Throttle valve set	1	
2	Gasoline pipe	1	
3	Motor oil joint	1	
4	Starter wire of carburetor	1	
5	Vacuum pressure tube	1	
6	Clip	1	
7	Intake manifold hose clamp	1	
8	Carburetor	1	
	Assembly		
	8→1		* ***WARNNING:*** Don't let dust enter into carburetor.
3	Motor oil joint		

			* ***WARNNING:*** Release air.

FUEL INSTALLATION

Disassembly / Assembly Carburetor

- Disassembling of carburetor.
- Adjust the idle speed.
- Adjust the air adjust screw.

* ***WARNNING:***

· No fire.

· Before disassembling, loose oil-draining screw, draining out the gasoline from carburetor.

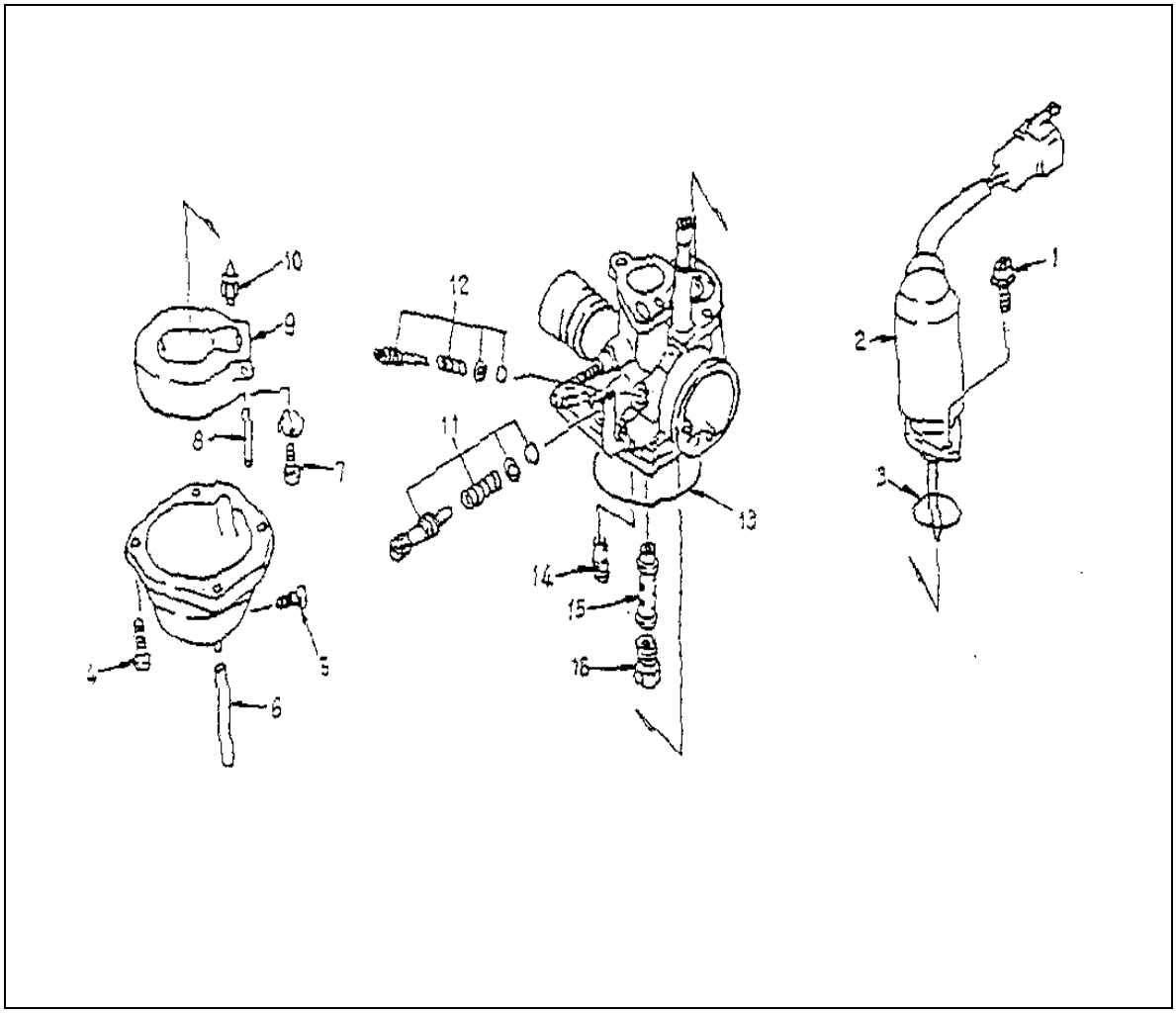

FUEL INSTALLATION

	Operation / Parts Name	Q'ty	Remarks
	Disassembly		
	Plunger starter		
1	Pan phillips bolt	2	
2	Start plug screw	1	
3	Oil ring	1	
	Float Chamber		
4	Pan phillips bolt	4	
5	Drain plug	1	
6	Over flow tube	1	
7	Pan phillips bolt	1	
8	Float pin	1	
9	Float	1	
10	Needle valve	1	
	Carburetor Ass'y		
11	Throttle screw set	1	
12	Air adjust screw set	1	* ***WARNNING:*** Must confirm rerotation location before disassembling , not locking too much avoid to hurt seat face.
13	Float chamber seal		
	Assembly		· Operating with sequence in reverse of Disassembling.
	13→1		
12	Air adjust screw set		* ***WARNNING:*** use high pressure air clean each way of carburetor.
			* ***WARNNING:*** must adjust air screw when changing air screw and carburetor ass'y.

FUEL INSTALLATION

Disassembly of Inlet Valve

- Disassembly of body cover.
- Disassembly of carburetor.

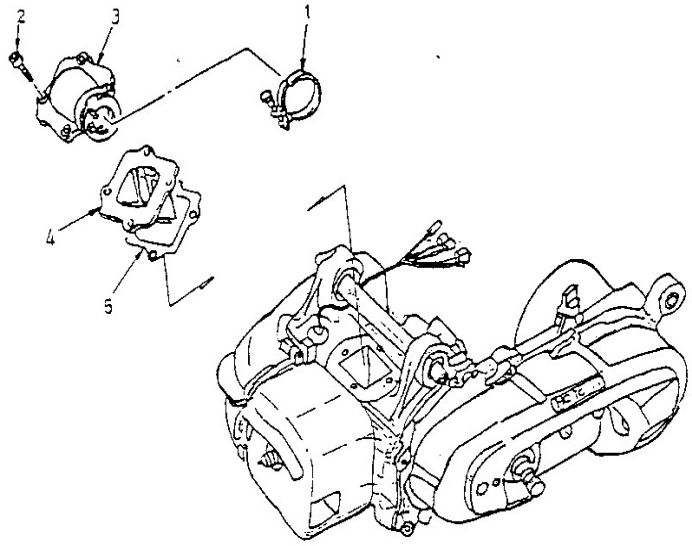

	Operation / Parts Name	Q'ty	Remarks
	Disassembly		
1	Intake manifold hose clamp	1	
2	Hex washer face bolt	4	
3	Intake manifold	1	
4	Reed valve ass'y	1	
5	Reed valve gasket	1	
	Assembly 5→1		· Assembling with sequence in reverse of disassembly.

4 5	Reed valve ass'y Reed valve gasket		**** WARNNING:*** Using new washer , the washer must aim at hole of reed valve. **** WARNNING:*** confirm no secondary air entering after installing.

FUEL INSTALLATION

Disassembly of Fuel Tank

· Disassembly of body cover.
· Disassembly of tail light fix bracket.
· Disassembly of inner carrier.

* ***WARNNING:***

· No fire.

· Shall be wiped off when fuel overflowed.

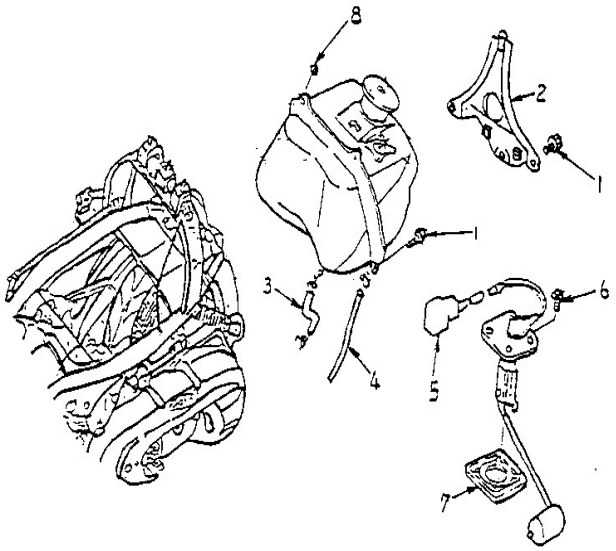

	Operation / Parts Name	Q'ty	Remarks
	Disassembly		
1	Hex bolt	4	
2	Tail light fix bracket	1	

3 4 5	Inner carrier Oil tube Tube	1 1 1	
6 7 8 9	Petrol gauge ass'y Joint of petrol gauge wire Round phillips bolt Oil lever gauge gasket Hex flat head phillips bolt	1 4 1 4	* ***WARNNING:*** Clip the tube, avoid fuel over-flow.
8	***Assembly*** 9→1 Oil lever gauge gasket	1	· Operating with sequence in reverse of disassembly. · Change new one.

FUEL INSTALLATION

Disassembly of Petrol Gauge

· Disassembling wire joint of petrol gauge and remove 4 hex phillips bolt.

* ***WARNNING:***

Don't damage petrol gauge wires.

· Remove the petrol gauge.

* ***WARNNING:***

Don't curving float arm of petrol gauge.

· Operation with sequence in reverse of disassembly.

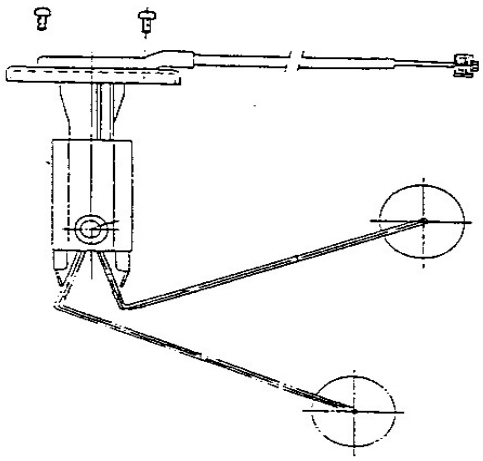

FUEL INSTALLATION

Disassembly of Air Cleaner

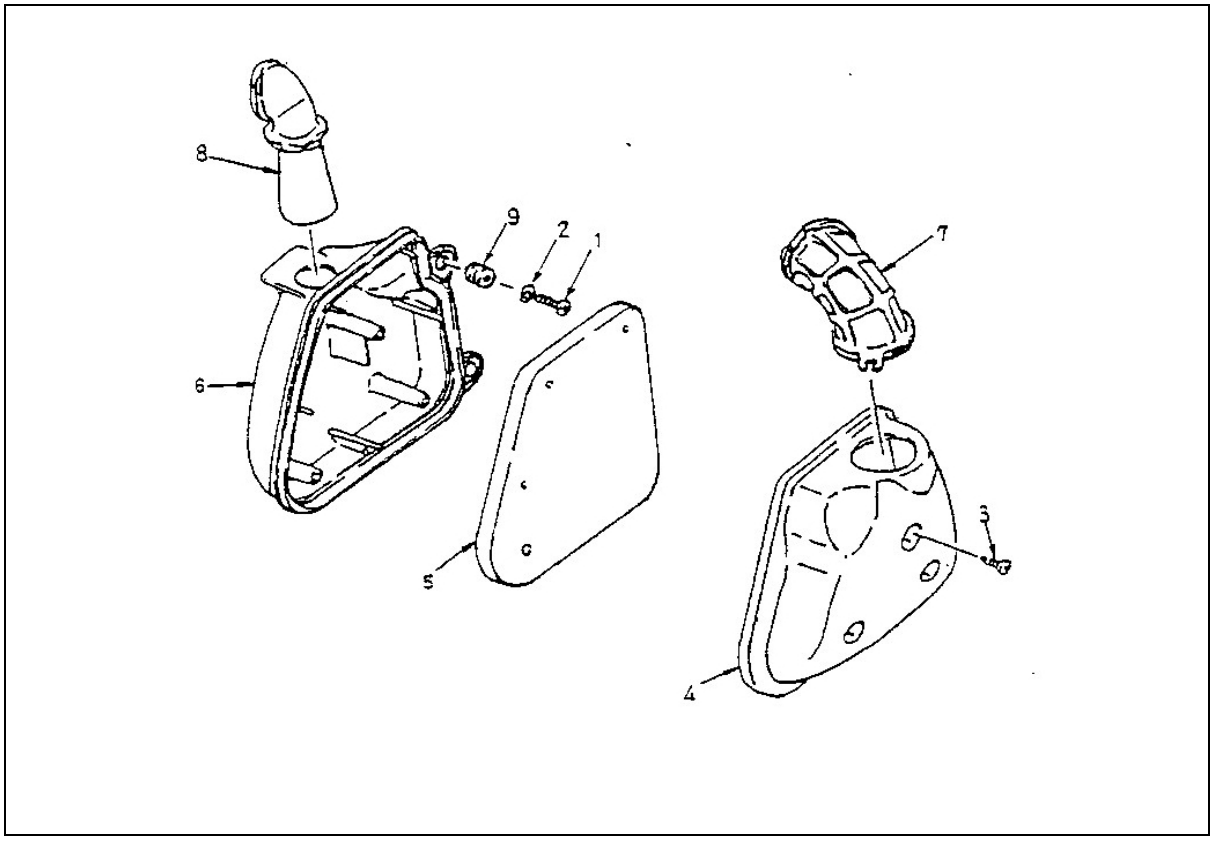

	Operation / Parts Name	Q'ty	Remarks
	Disassembly		
1	Hex socket bolt	2	
2	Plain washer	1	
3	Self-tapping screw	3	
4	Air cleaner case cap	1	
5	Air cleaner element	4	

6 7 8 9	Air cleaner case Air cleaner joint Cleaner guide pipe Grommet	1 1 2 1	
	Assembly 9→1		· Operating with sequence in reverse of disassembly.

DISASSEMBLY OF ENGINE

Attention of Operation

· Operation after disassembling the engine.

– Crank shaft case

– Crank shaft

– Exchange bearing of final transmission mechanisms.

Disassembly of Engine

· Disassembly of external cap of body.
· Disassembly of luggage case.
· Disassembly of throttle valve.
· Adjustment the throttle cable.
· Adjustment the rear break cable.
· Adjustment the oil pump control cable.

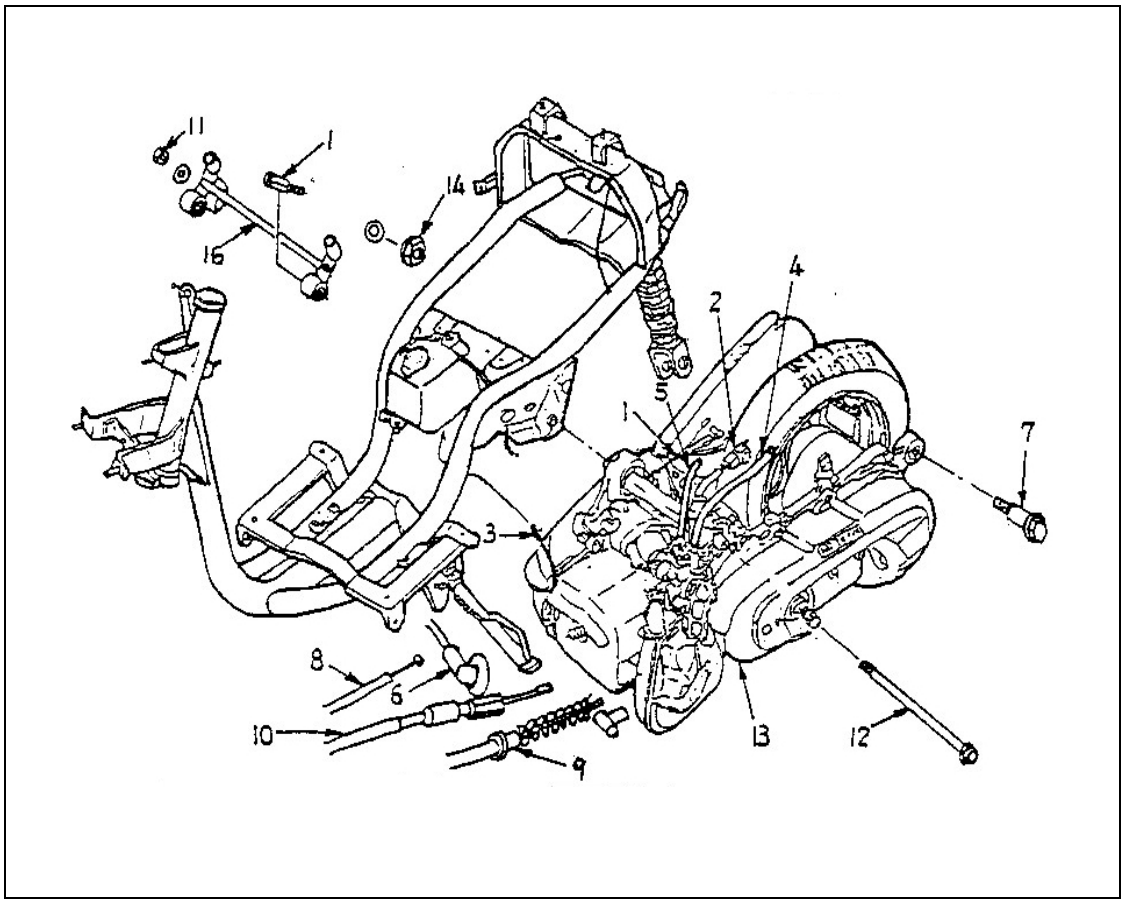

DISASSEMBLY OF ENGINE

	Operation / Parts Name	Q'ty	Remarks
	Disassembly		
1	ACG wire /wire of start motor	2	***✱WARNNING:***
2	Starter wire of carburetor	1	The oil over-flow when remove the
3	Oil tube	1	oil tube , so use clip or plug stop the seal.
4	Fuel tube	1	
5	Vacuum pressure tube	1	
6	Cap of spark plug	1	
7	Hex washer face bolt of rear cushion	1	
8	Oil pump control cable	1	
9	Cable of rear brake	1	
10	Throttle cable	1	
11	Hex washer face bolt of engine	1	
12	Bolt	1	
13	Engine	1	***✱WARNNING:***
14	Nut	1	• Don't damage rear fender when remove
15	Engine bracket bolt	2	the engine.
16	Engine bracket	1	• Actually for brace the frame, avoid body
			turn inside out.
	Assembly		***✱WARNNING:*** Carry out following adjusting
	16→1		after installation.
			– Cable of throttle valve
			– Oil pump control cable
			– Rear break cable

6. CYLINDER HEAD / CYLINDER / PISTON

Attention of Operation

- Can be operated when engine installed on vehicle.
- Must cleaning before operating , avoiding dust enter the engine.
- Remove the gasket dust stay on joint face.
- When remove the cylinder , avoid to use screw driver to damage the joint face.
- Avoid to damage the cylinder inner surface and piston face.
- Cleaning before check parts, and smear motor oil appointed in sliding face before the installation.

Diagnosis of Troubles

Low compression pressure, poor start, idle speed not stable

- Air leakage of cylinder head gasket
- Wear & damage the piston ring
- Wrong installation of spark plug
- Wear & damage the cylinder and piston
- Inlet valve poor.

Compression pressure too high, overheating, locking

- Piling up carbon of cylinder head or piston head.

Piston Knocking Noise

- Wear the cylinder and piston
- Wear the piston pin hole and piston pin
- Wear the needle bearing of crank connecting rod (small end)

Piston ring noise

- Wear or damage the piston ring
- Wear or damage the cylinder

Disassembly of Cylinder Head / Cylinder / Piston

- Disassembly of L/R side cover
- Disassembly of generator
- Disassembly of spark plug cap
- Disassembly of cylinder air-throud

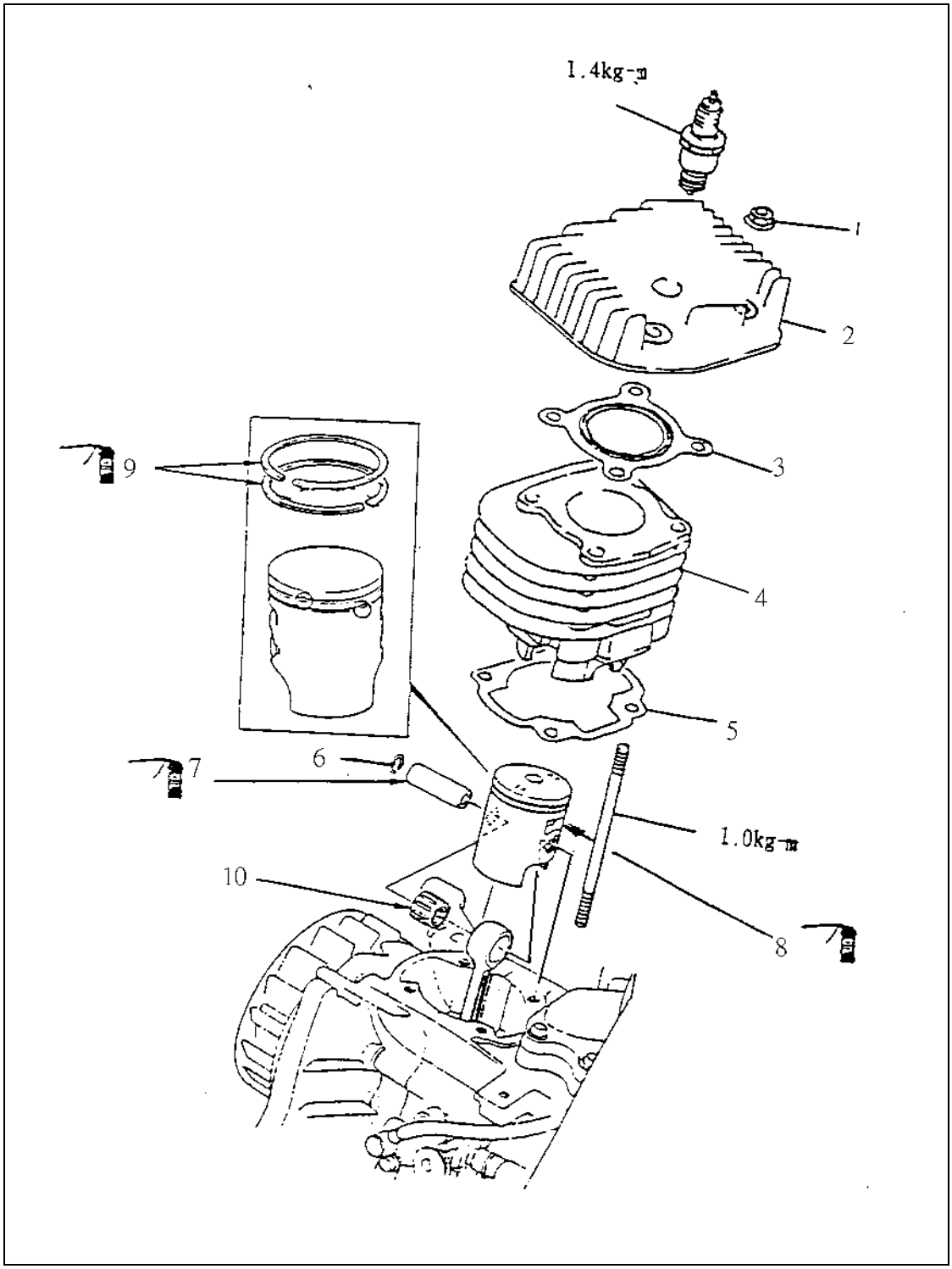

	Operation / Parts Name	Q'ty	Remarks
	Disassembly Cylinder head		
1	Nut of cylinder head	4	✱***WARNNING:*** – Cross loosing the nuts 2-3 times.
2	Cylinder head	1	
3	Cylinder head gasket	1	
	Cylinder		
4	Cylinder	1	✱***WARNNING:*** – Don't knock cooling fin.
5	Cylinder gasket	1	✱***WARNNING:*** – During cleaning the gasket beware not to damage joint face of cylinder and crank case.
	Piston		
6	Piston ring clip	2	
7	Piston pin	1	
8	Piston	1	
9	Piston ring	2	
10	needle bearing of small side	1	
	Assembly 10→1		– Operation with sequence in reverse procedure.

Installation of Piston Ring

- Remove carbon muck inside ring ditch and piston ring during disassembly.
- Do not scratch piston and do not bend piston rings.
- Install top-piston ring & 2nd piston ring into piston.
- Press the ring on few points after installed into piston to ensure the ring goes deep enough into the ditch

✱***WARNNING:***

Change whole set of piston ring with genuine parts.

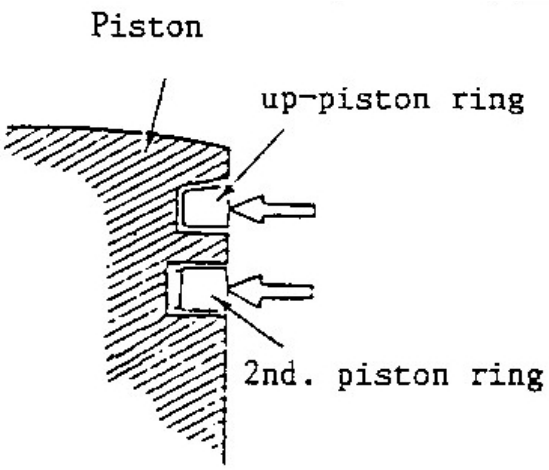

Starter / Driving Disc / Clutch / Transmission Disc

Attention of Operation

· Don’t make greases stick to surface of transmission belt or belt plate. Otherwise , the efficiency of power transmission will be lowered by skid.

· Don’t rotation the starter when remove the front cap of left crankshaft case.

Diagnosis of Trouble

Vehicle does not move after engine start up

- Drive belt wear-out
- Drive face comp. damage
- Clutch lining wear-out
- Driven ass’y spring defect

Power insufficient

- Drive belt wear-out
- Driven ass’y spring defect
- Drive face dirty or oily
- Weight roller wear-out

Disassembly of Left Crank Case Cover

· Disassembly of air cleaner ass'y.

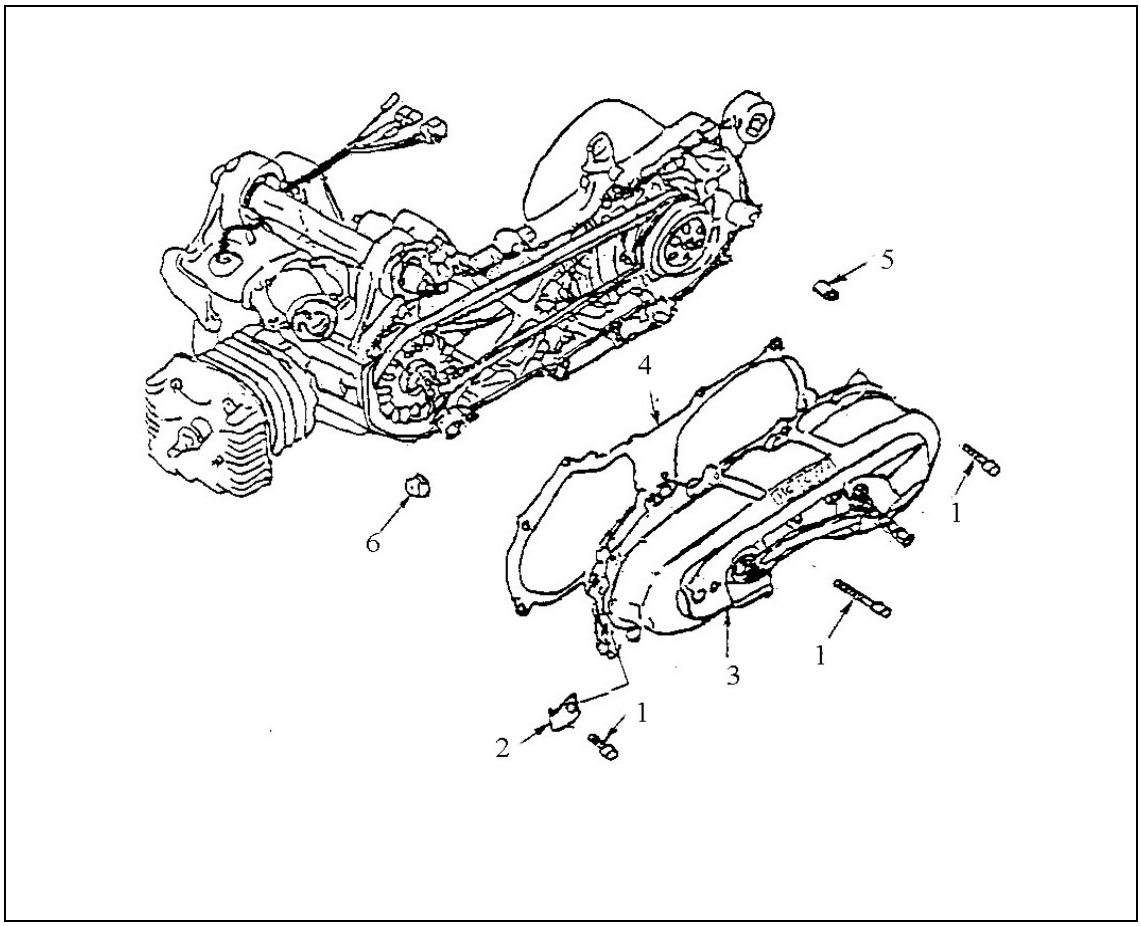

	Operation / Parts name	Q'ty	Remark
	Disassembly		
1	Hex socket bolt	12	
2	Carburetor tube bracket	1	
3	Left crank case cover	1	
4	Crankcase cover gasket	1	***WARNNING:***
5	Dowel pin	2	Check the air cleaner whether
6	Grommet	1	worsen or harm.
	Assembly		· Operation with sequence in reverse
	6→ 1		of disassembly.

Starter / Driving Disc / Clutch / Transmission Disc

Disassembly of Kick Starter

· Disassembly of left crank case cover.

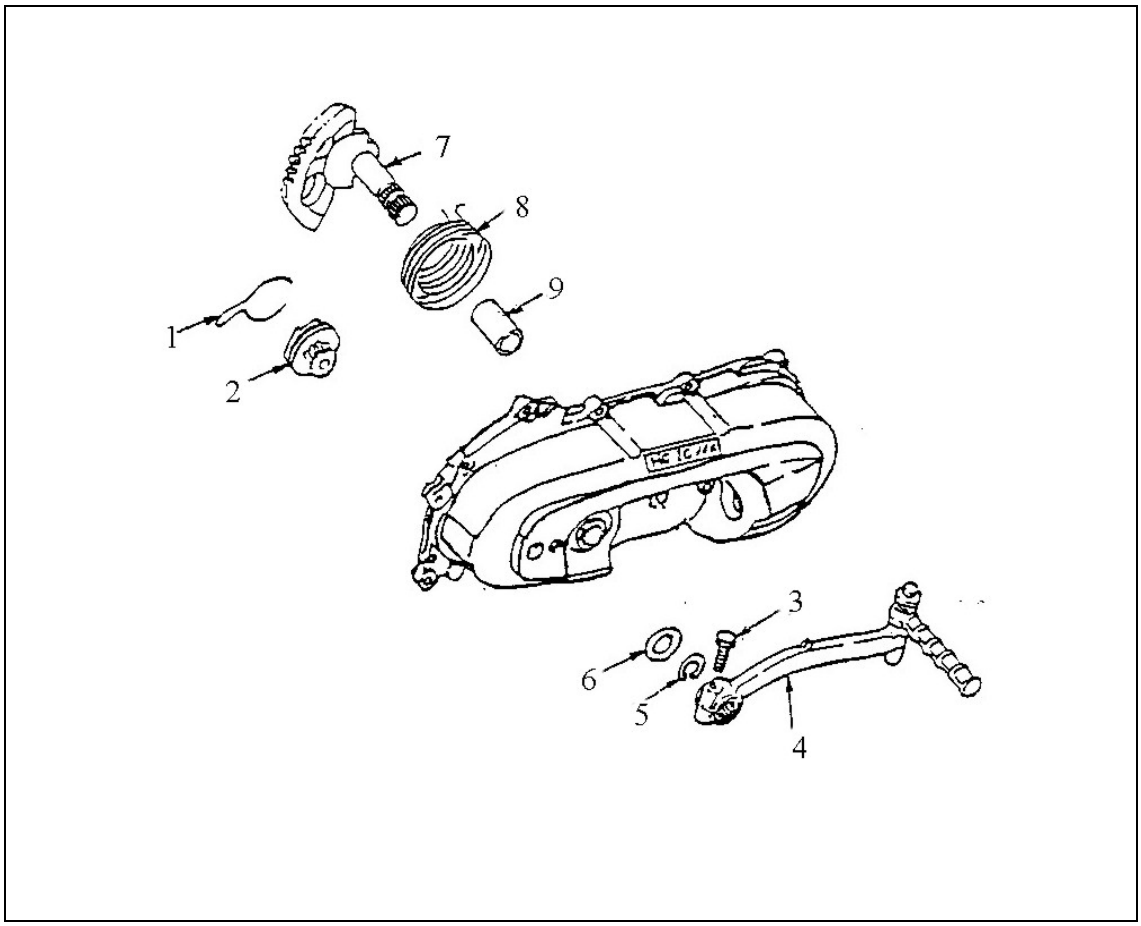

	Operation / Parts name	Q'ty	Remark
	Disassembly		
1	Kick pinion spring clip	1	
2	Kick pinion	1	✱***WARNNING:*** Rotating pedal kick crank and remove the assembly.
3	Hex washer face bolt	1	
4	Kick crank	1	
5	External ring clamp	1	
6	Plain washer	1	
7	Starting shaft ass'y	1	
8	Starting shaft reset spring	1	
9	Bushing	1	

Starter / Driving Disc / Clutch / Transmission Disc

	Operation / Parts name	Q'ty	Remark
	Assembly		
9	Washer	1	
8	Starting shaft reset spring	1	✱***WARNNING:*** Unable into main shaft fix position when inside and outside reset spring overlap, use flat-driver will inside、outside spring part, then press main shaft.
7	Starting shaft ass'y	1	
6	Plain washer	1	
5	External ring clamp	1	
4	Kick crank	1	
3	Hex washer face bolt	1	
2	Kick pinion	1	
1	Kick pinion spring clip	1	

Installation of Kick Pinion / Kick Pinion Spring Clip

- Set kick starter shaft first.
- Turning starter, hang kick pinion spring clip on crank shaft case convex and assembly of kick pinion to the location of removing.
- Turning starter, let starting shaft and kick pinion conjoin.

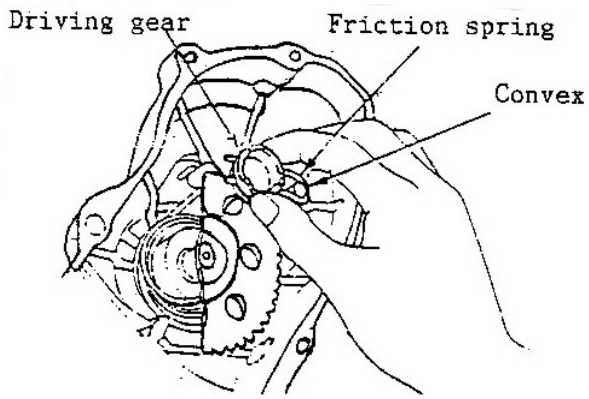

Check of Starter

- Check the wear & damaging of starting shaft or gear.
- Check the tightness & damage of starting shaft reset spring.
- Check the wear & damage of bush.

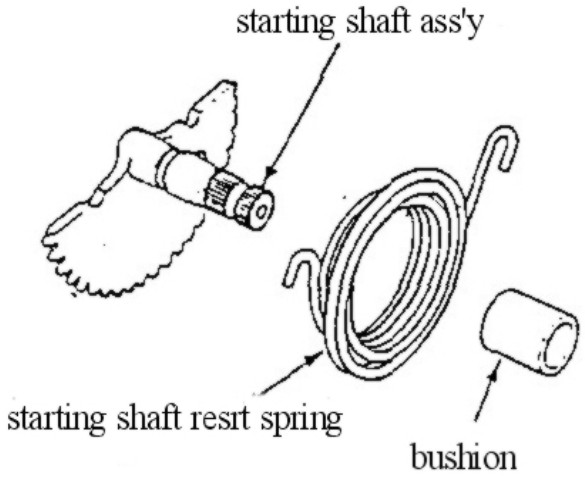

Starter / Driving Disc / Clutch / Transmission Disc

- Check the wear & damage of kick pinion.
- Check the wear & damage of kick pinion spring clip.

- Check the wear & damage of starting shaft , bearing and driving gear.

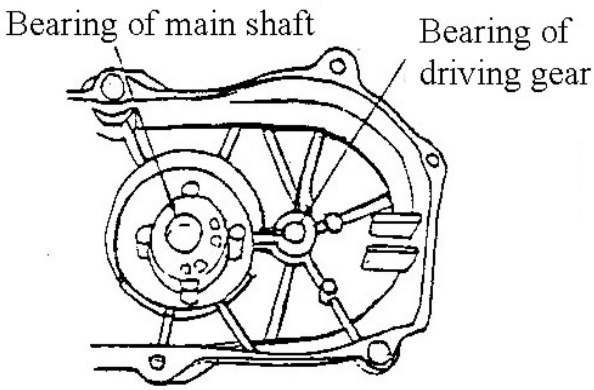

Disassembly of Left Crank Case (→ 7-2)

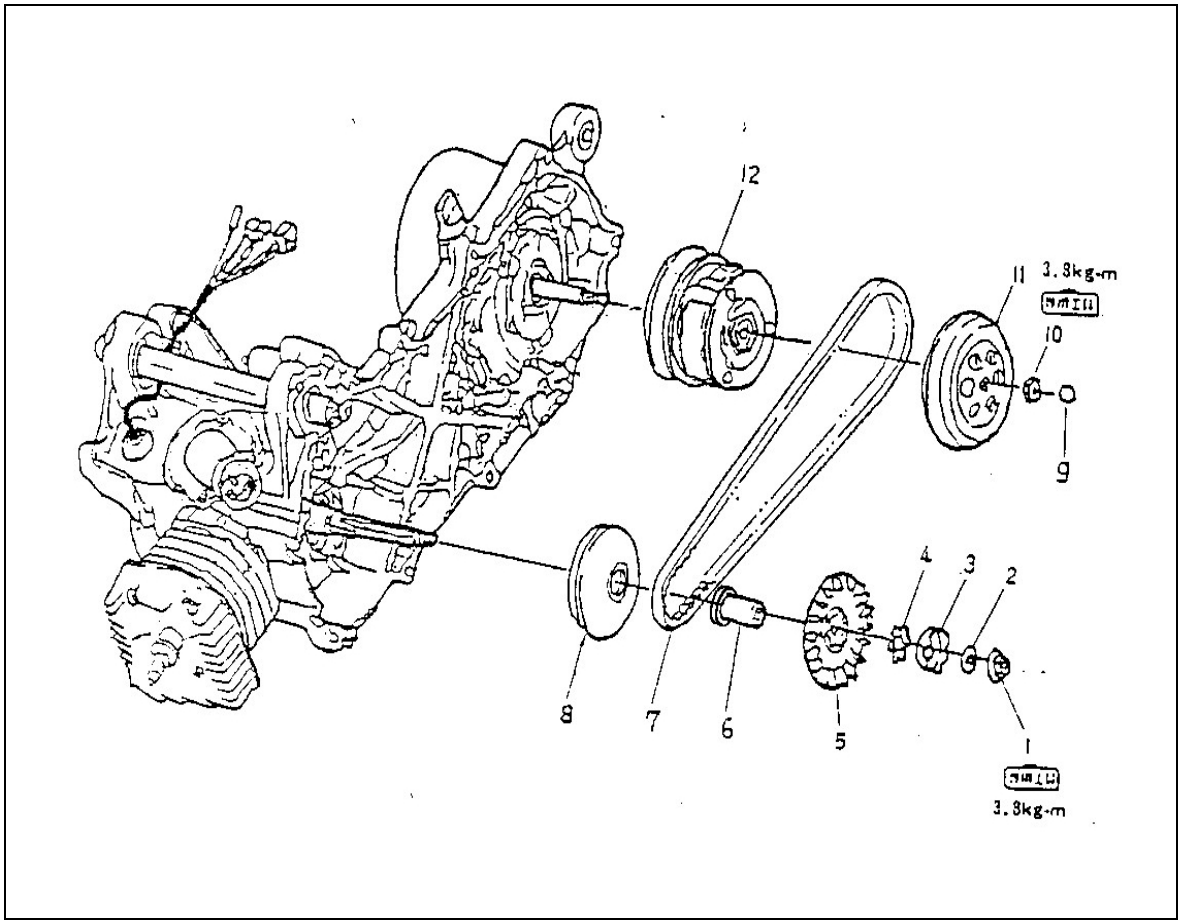

	Operation / Parts name	Q'ty	Remark
	Disassembly		
1	Hex washer face bolt	1	✱***WARNNING:*** Don't hurt transmission belt.
2	Cone spring washer	1	
3	One-way clutch	1	
4	Clamp washer	1	
5	Primary fixed sheave	1	
6	Bushing	1	
7	V-Belt	1	
8	Primary sliding slot wheel	1	Separation / assembling (→ 7-7)
9	Oil ring	1	
10	Hex nut	1	
11	Covering of clutch	1	
12	Drive face ass'y	1	Separation / assembling (→ 7-8)
	Assembly 12→ 1		· Operation with sequence in reverse of disassembly.

Disassembly of Sliding Driving Disc

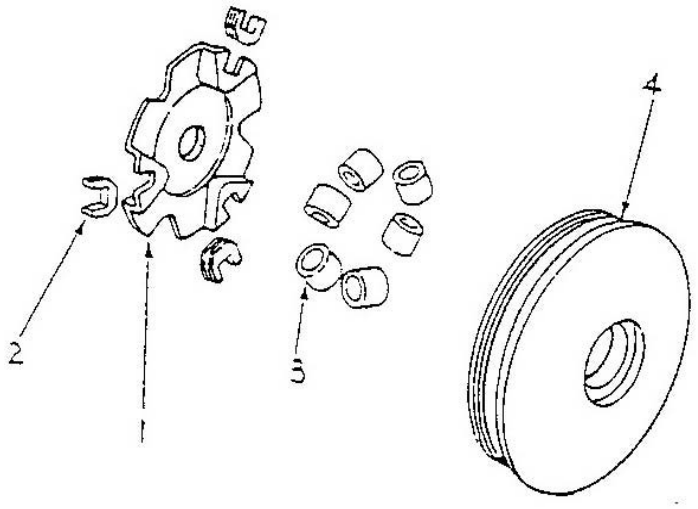

	Operation / Parts name	Q'ty	Remark
	Disassembly		
1	Cam plate	1	
2	Cam plate sliding	3	
3	Weight roller	6	
4	Primary sliding slot wheel	1	
	Assembly 4→ 1		· Operation with sequence in reverse of separating.

Starter / Driving Disc / Clutch / Transmission Disc

Disassembly of Clutch / Transmission Belt Disc

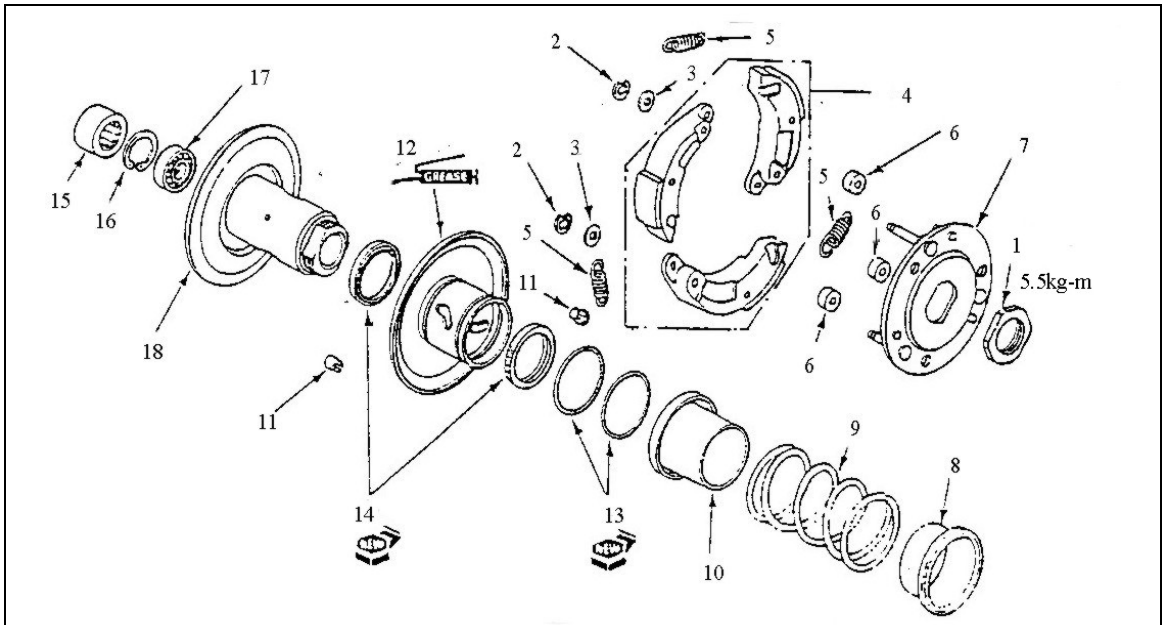

	Operation / Parts name	Q'ty	Remark
	Disassembly		
	Clutch		
1	Nut	1	
2	C retaining ring	3	
3	Washer	3	
4	Clutch weight set	3	
5	Clutch weight spring	3	
6	Rubber buffer	3	✱***WARNNING:*** Must replacing when the buffer have damage, hardening and distortion.
7	Driving plate of clutch	1	
	Drive face ass'y		
8	Axle ring of spring		
9	Compression spring		
10	Secondary spring seat		
11	Guide pin		
12	Secondary sliding slot wheel		
13	Oil ring		
14	Oil seal		
15	Needle bearing		
16	Internal circle clip		
17	Radial ball bearing		
18	Secondary fix slot wheel		
	Assembly		· Operation with sequence in reverse of separating.
	18→ 1		

Final Transmission Mechanism

Attention of Operation

- This chapter explain that final reduction mechanism maintance. Can be operated in the vehicle.
- For no hurting case cap, changing the bearing of left crank shaft case after removing the rear break of engine.
- Use professional tool to change driving shaft and pull out the shaft after fixing inner ring of bearing.

Diagnosis of Trouble

Engine starts but vehicle does not move.

•Transmission gears broken.

•Transmission gears burns out.

Operate of noise

- Abrasion、wore and teeth hurted of gear
- Bearing wore and loosened.

Gear oil leaking

•Too much gear oil filled.

•Oil seal wear-out or damage.

Final Transmission Mechanism

Disassembly of primary drive gear / final reduction mechanism

· Disassembly of rear tire(→ 11-2).

· Disassembly of clutch / drive face(→ 7-6).

WARNNING:

First drain the oil of transmission.

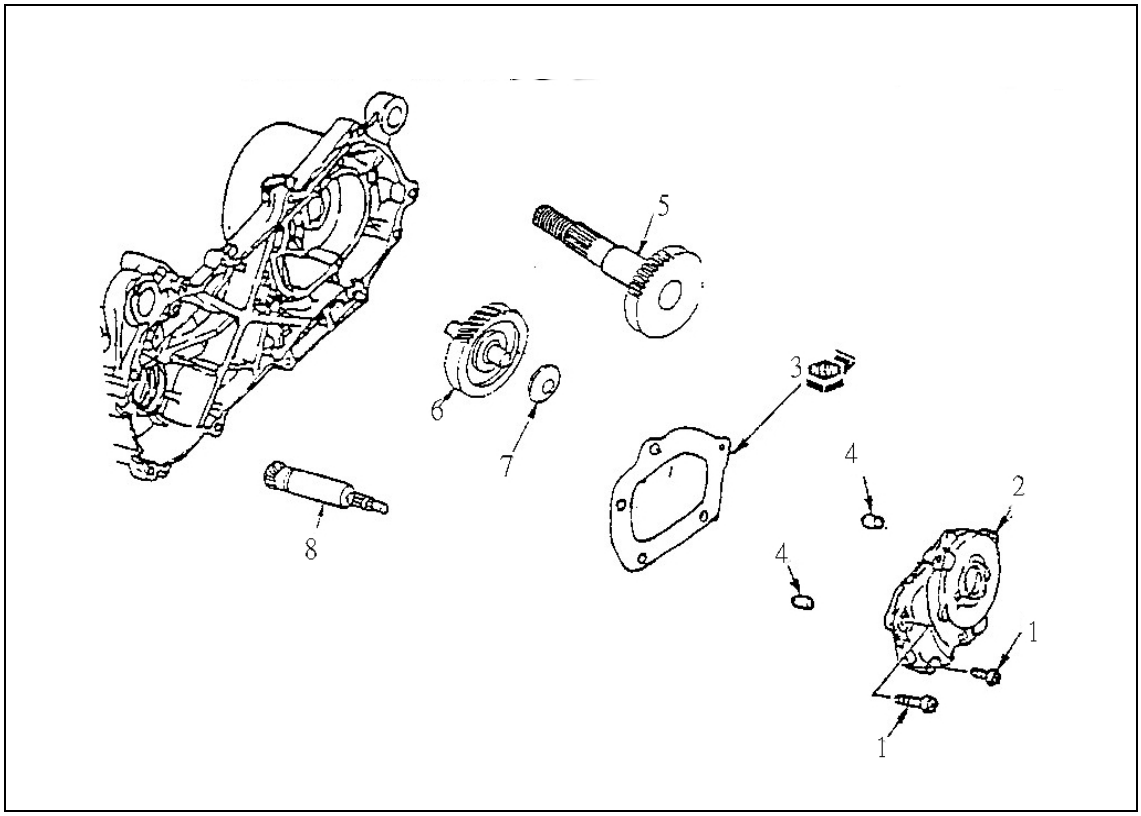

	Operation / Parts name	Q'ty	Remark
	Disassembly		
1	Bolt	5	
2	Mission cover	1	
3	Washer	1	
4	Dowel pin	2	
5	Drive axle	1	
6	Main axle comp.	1	· Check the wear & damage of shaft and gear. Change new one. (→ 8-3)
7	Plain washer	1	
8	Primary drive gear	1	

	Assembly 8→ 1		· Operation with sequence in reverse of disassembly.

Final Transmission Mechanism

Change the Driving Shaft

· Remove the driving shaft from mission cover.

* ***WARNNING:***

Don't damage joint face of mission cover.

· Remove the oil seal of primary drive gear.
· Remove the bearing.

· Install the new bearing in the mission cover.

* ***WARNNING:***

Install the bearing with facing outside.

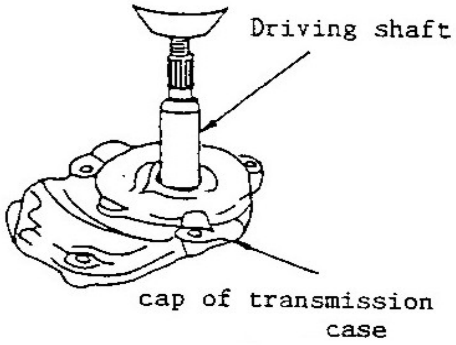
Driving shaft
cap of transmission case

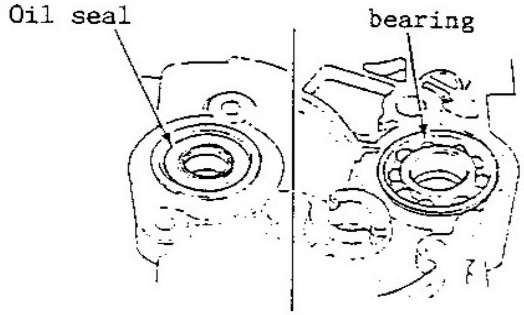
Oil seal
bearing

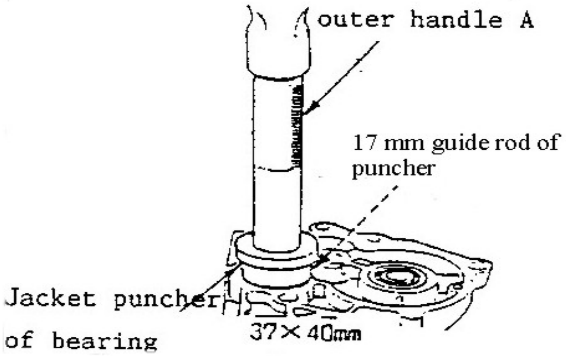
outer handle A
17 mm guide rod of puncher
Jacket puncher of bearing
37× 40mm

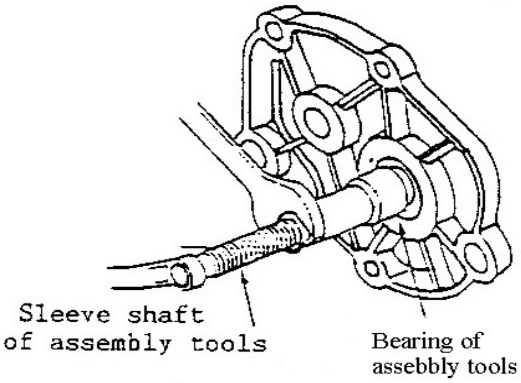
Sleeve shaft of assembly tools
Bearing of assebbly tools

Crank Case / Crank Shaft

Attention of Operation

- This chapter explain the necessary procedure of disassembling crank case due to repair & maintain the crank shaft.
- Before disassembling of crank case , must operation with sequence of each chapter to disassembly.

  – Disassembly of oil pump (Chap. 3)

  – Disassembly of carburetor (Chap. 4)

  – Disassembly of intake valve (Chap. 4)

  – Dis-mounting of engine (Chap. 5)

  – Disassembly of cylinder head and cylinder (Chap. 6)

  – Disassembly of ACG (Chap. 12)

  – Disassembly drive face ass'y (Chap. 7)

- Must disassembly of final reduction mechanism when change the left crank case.

- Must use special tool into the inner ring of crank shaft bearing , and pull in crank shaft to assembly when assembly crank case & crank shaft , put new bearing into crank case, and put into new oil seal after assembling crank case.

Diagnosis of Troubles

Noise of Engine

- Damage of crankshaft bearing.

· Damage of needle bearing of crankshaft pin.

Crank Case / Crank Shaft

Assembly / Disassembly of Crank Case

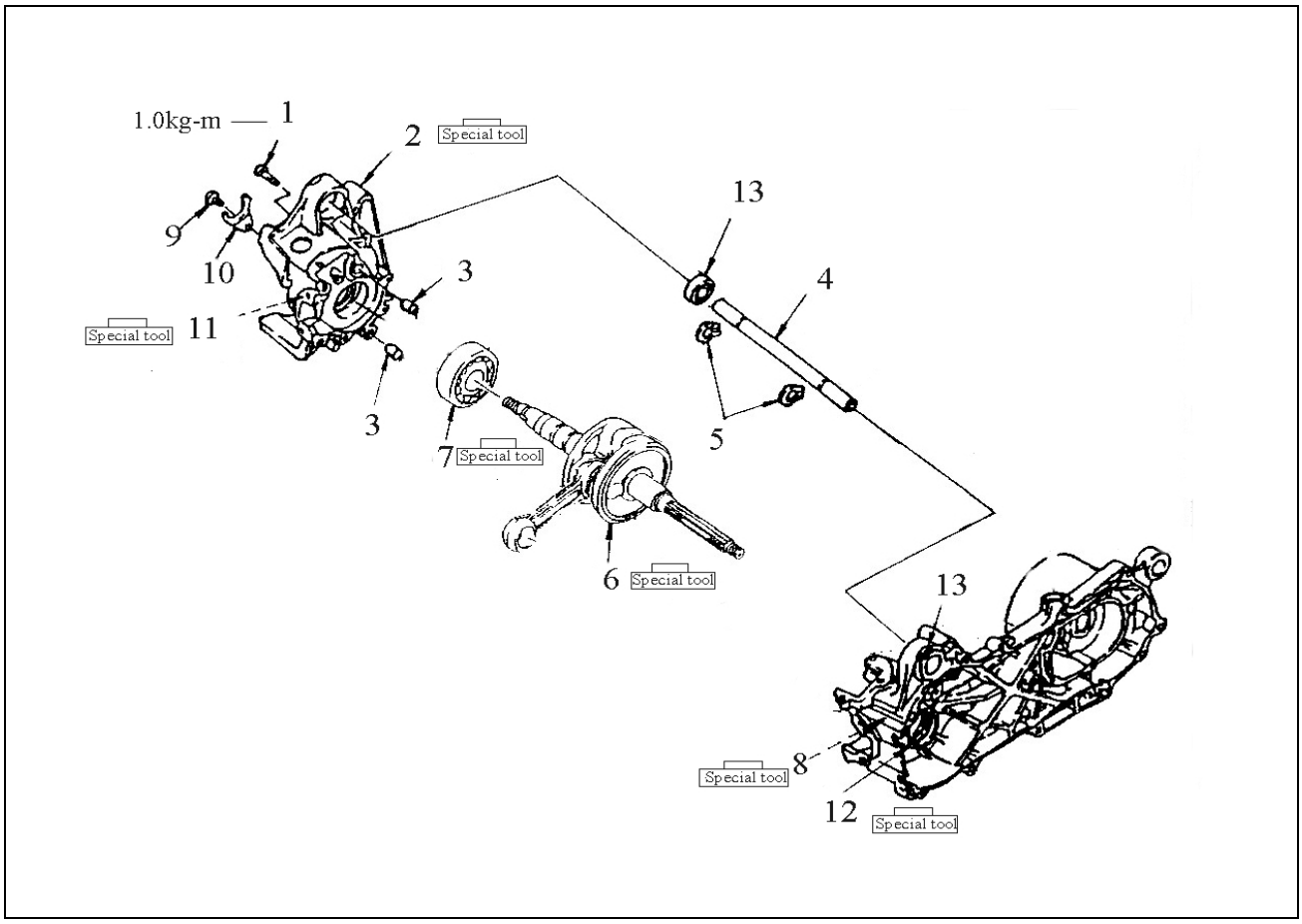

Operation / Parts name	Q'ty	Remark

	Disassembly		
1	Hex socket bolt	6	
2	Right crank shaft case	1	
3	Dowel pin	2	
4	Fix shaft of crank shaft case	1	
5	External circle clip	2	
6	Crank shaft	1	
7	Radial ball bearing (Right)	2	
8	Radial ball bearing (Left)	1	
9	Hex socket bolt	1	
10	Oil seal bracket	1	
11	Right oil seal	1	
12	Left oil seal	1	
13	Radial ball bearing	2	
	Assembly		
	13→ 1		

Crank Case / Crank Shaft

Disassembly of Crank Case

· Install the puller on right crank case, separate the R. crank case and L. crank case.

: Crank case puller **(TLJT-03)**

· Install the puller on left crank case, remove the crank shaft from the crank case.

: Crank case puller (TLJT-03)

* ***WARNNING:***

Don't knock the crank shaft when disassembling.

· Use the bearing puller to remove the crankshaft bearing from crank shaft, then remove the R/L crank case.

: Bearing puller (TLJT-00)

* ***WARNNING:***

Must remove the oil seal when separate the crank case, and never use the old oil seal.

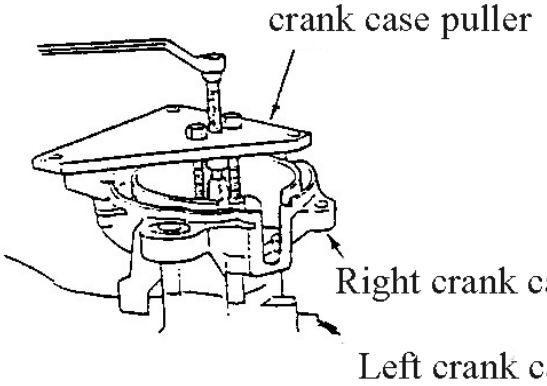

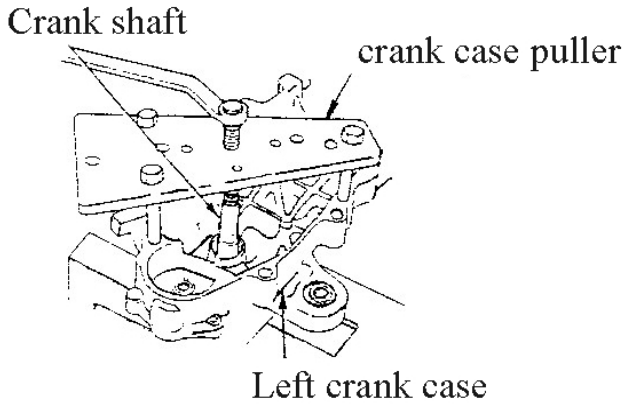

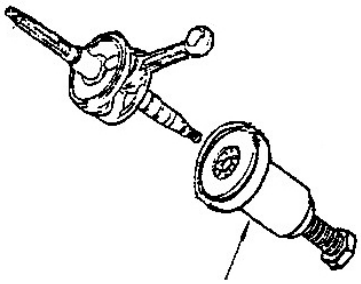

Assembly of Crank Case

· Clean the crank case with gasoline, and check the each part whether damaged or crack.

* ***WARNNING:***

**Smear of oil on sliding surface of each shaft in crank case after checking.

**Cleaning the washer dust of joint face, and amend the part damage with oil stone.

Crank Case / Crank Shaft

· Put new crank shaft into right crank case.

· Put crank shaft assembly into left crank case.

WARNNING:

** Smear the 2-stroke oil to main bearing and big end of connecting rod.

** Note the position of connecting rod.

· Put left oil seal into L. crank shaft case, surface depth under 1.0 mm.

Crank Case / Crank Shaft

Assembly of Crank Case

· Install the dowel pins in the joint face of left crank case.

· Install the right crank case.

: Bearing puller (TLJT-00)

· Install the new R. oil seal to crank case.

: Bearing puller (TLJT-00)

10. Front Wheel / Front Suspension / Front Brake

Attention of Operation

· Support the bottom side of frame body before remove the front wheel, don't invert the front wheel when front wheel depart ground.

Diagnosis of Trouble

Heavy steering movement

· Over tied of the steering ball race
· Steel ball inside ball race broken
· Tire pressure insufficient

Brake efficiency abnormal

· Brake lining wear-out
· Brake pads adjust not correct
· Brake disc attrition
· Tire wear-out

Poor Brake

· Bad adjustment of brake
· Wear the brake pad

Steering handle not straight

· L/R suspension not balanced
· Front fork banded
· Front tire axle banded, tire wear-out

Front wheel shaking

· Front rim defected
· Loose of front rim bearings
· Tire defect
· Bad adjustment of the front axle

Disassembly / Assembly of Front Wheel

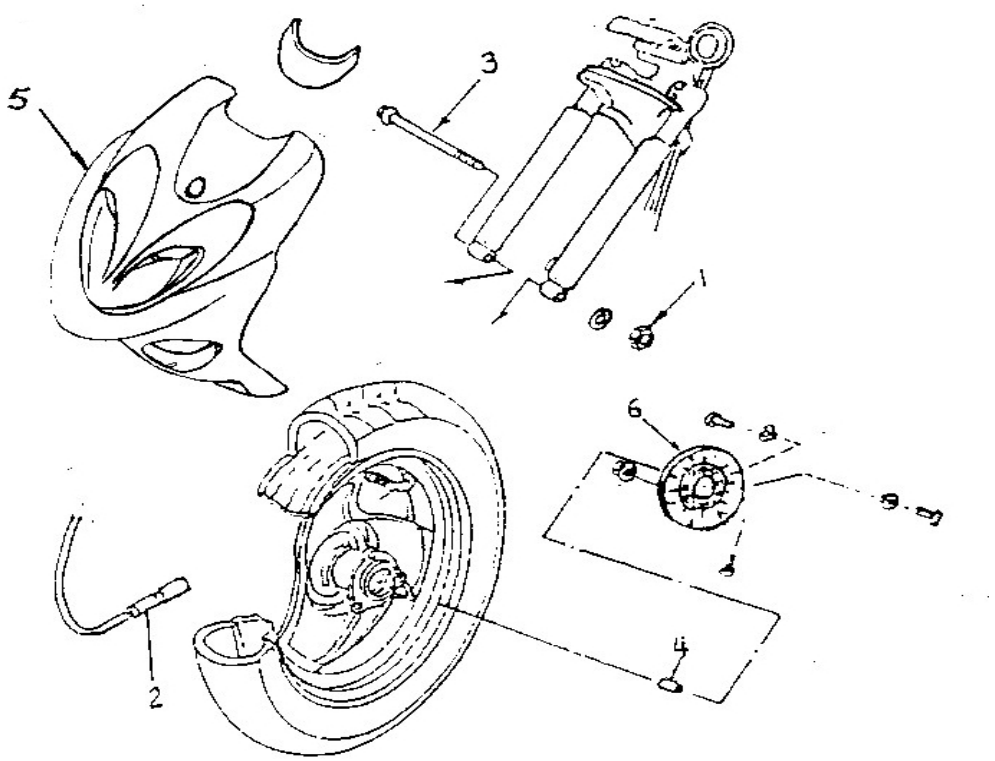

	Operation / Parts name	Q'ty	Remarks
	Disassembly of Front Wheel		
1	Nut nylon	1	
2	Speedometer gear	1	
3	Hex washer face bolt	1	
4	Front collar	1	
5	Front fender	1	
6	Front brake disc	1	
	Assembly 6→ 1		– Operation with sequence in reverse procedure. ***✱WARNNING:*** – Assembly of right fork, shall be aimed at convex of speedometer gear.

Assembly / Disassembly of Front Rim

· Disassembly of front wheel.

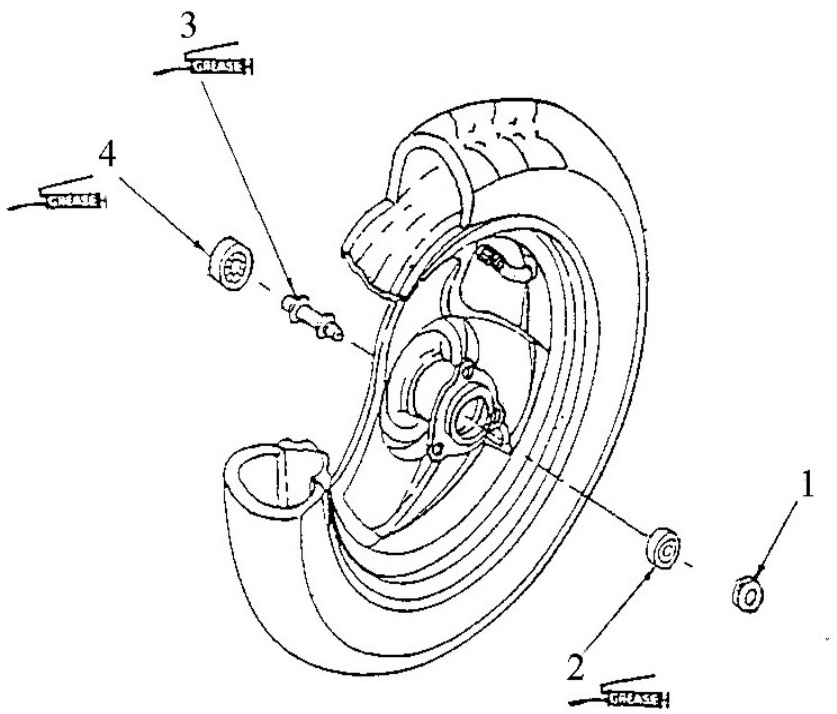

	Operation / Parts name	Q'ty	Remarks
	Disassembly		
1	Front collar	1	
2	Oil seal	1	
3	Radial ball bearing	2	
4	Front wheel spacer tube	1	
	Assembly 4→ 1		– Operation with sequence in reverse procedure. ***✱WARNNING:*** – Must change the R/L bearing set.

Assembly / Disassembly of Front Disk

Assembly / Disassembly of Front Disk

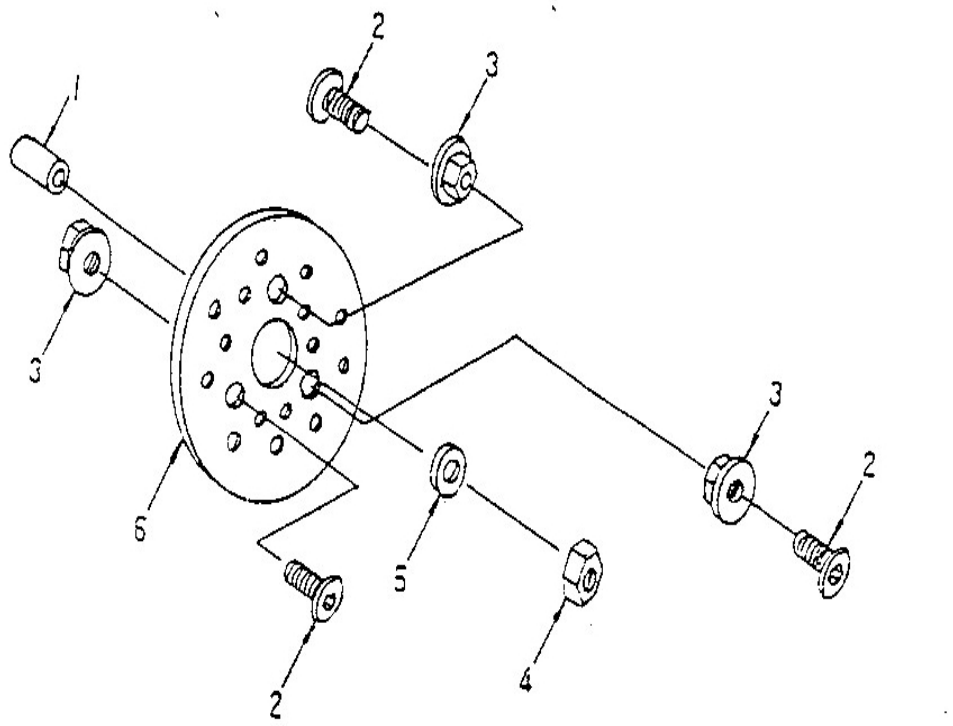

	Operation / Parts name	Q'ty	Remarks
	Disassembly		
1	Front collar	1	
2	Brake disc hex socket bolt	3	
3	Hex flange nut with serration	3	
4	Nylon insert lock nut	1	
5	Plain washer	1	
6	Front brake disc	1	
	Assembly 6→ 1		– Operation with sequence in reverse procedure.

Disassembly of Steering Handle

· Disassembly of throttle handle

· Dismount rear brake cable

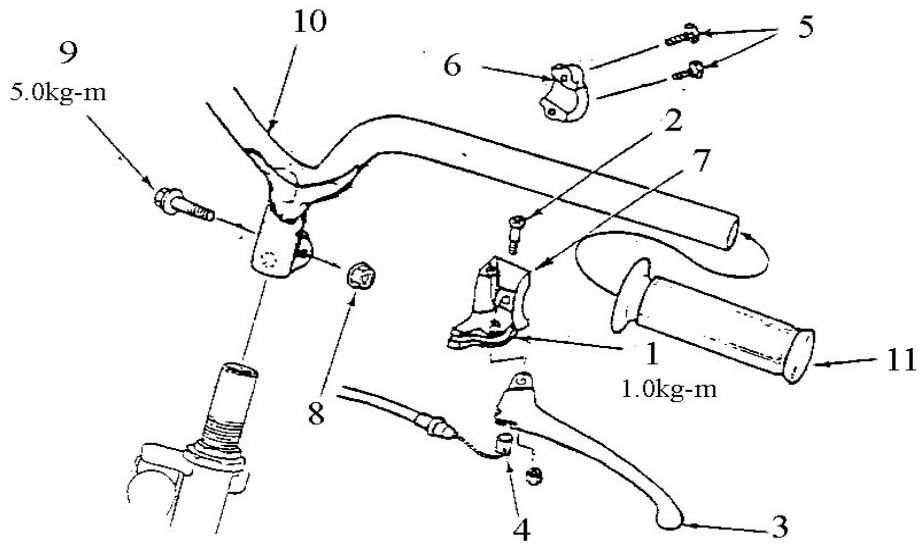

	Operation / Parts name	Q'ty	Remarks
	Disassembly		
	Rear brake lever		
1	Nut	1	
2	Left lever set bolt	1	
3	Rear brake lever	1	
4	Rear brake cable	1	
	Bracket of rear brake lever		
5	Hex socket bolt	1	
6	Fixed belt of steering handle	1	
7	Bracket of rear brake lever	1	
	Steering Handle		
8	Hex flange nut with serration	1	
9	Washer	1	
10	Hex washer face bolt	1	
11	Steering handle	1	
12	Handle grip	1	

	Assembly		– Operation with sequence in reverse procedure.
	12→ 1		
11	Steering handle	1	***WARNNING:***
7	Bracket of rear brake lever	1	– Install steering handle with handle convex at ditch of steering stem.
4	Rear brake cable	1	– The convex of brake lever bracket should be fit into handle bar.

Disassembly of Steering Stem

· Disassembly of front wheel.

· Disassembly of steering handle

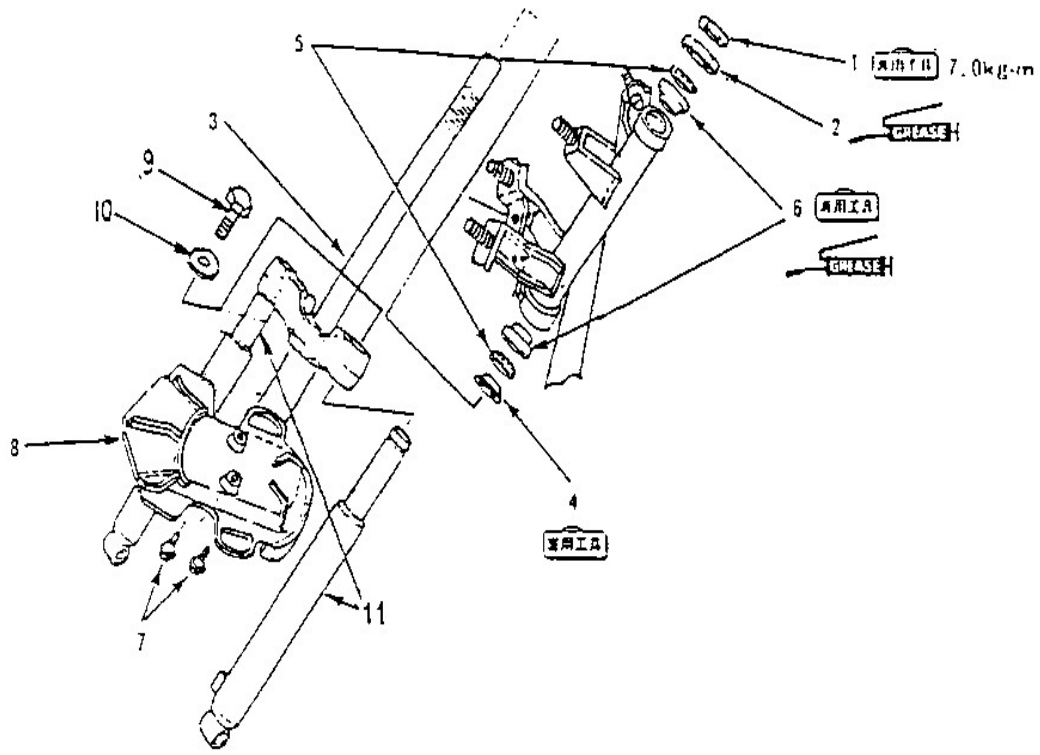

	Operation / Parts name	Q'ty	Remarks
	Disassembly		
1	Spanner nut	2	
2	Steering stem dust cover	1	***WARNNING:***
3	Lathe cone on steering top #2	1	– Not to damage steering stem.
4	Race ball #5	1	
5	Steel ball race	2	
6	Lathe on steering inner #3	2	

7 8 9 10 11	Bolt Front inner fender Hex bolt Washer Front fork	2 1 2 2 1	***WARNNING:*** – Remove L/R tube by loose these two hex bolts.
	Assembly 11→ 1		– Operation with sequence in reverse procedure.

Turning Front Fork to Left / Right

- Turn the front fork several times, make the ball race rotate smoothly.
- Slightly tie-up the bottom spanner nut and backward about 1/8 turn.
- Confirm the steering rotation smooth and gap of steering stem.

Special Tool: fixed nut spanner

- Keep the bottom spanner nut fixed to avoid the nut rotate with the upper spanner nut.

Locking Torque: 7.0 kg-m

Special Tool: Fixed nut spanner

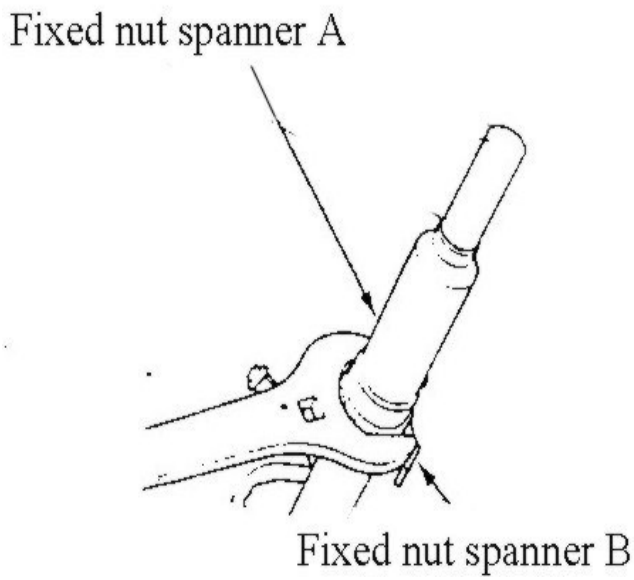

REAR WHEEL / SUSPENSION / BRAKE

Diagnosis of Troubles

Rear wheel shaking

- The shape of rear rim damaged.
- Tire defected.

Rear suspension too soft

- Spring too soft.

Brake efficiency abnormal

- Brake pad adjust not correct.
- Brake pad attrition.
- Brake pad cam part wear.
- Brake cam wear.
- The tooth groove setting poor of break arm.

REAR WHEEL / SUSPENSION / BRAKE

Disassembly of Rear Wheel

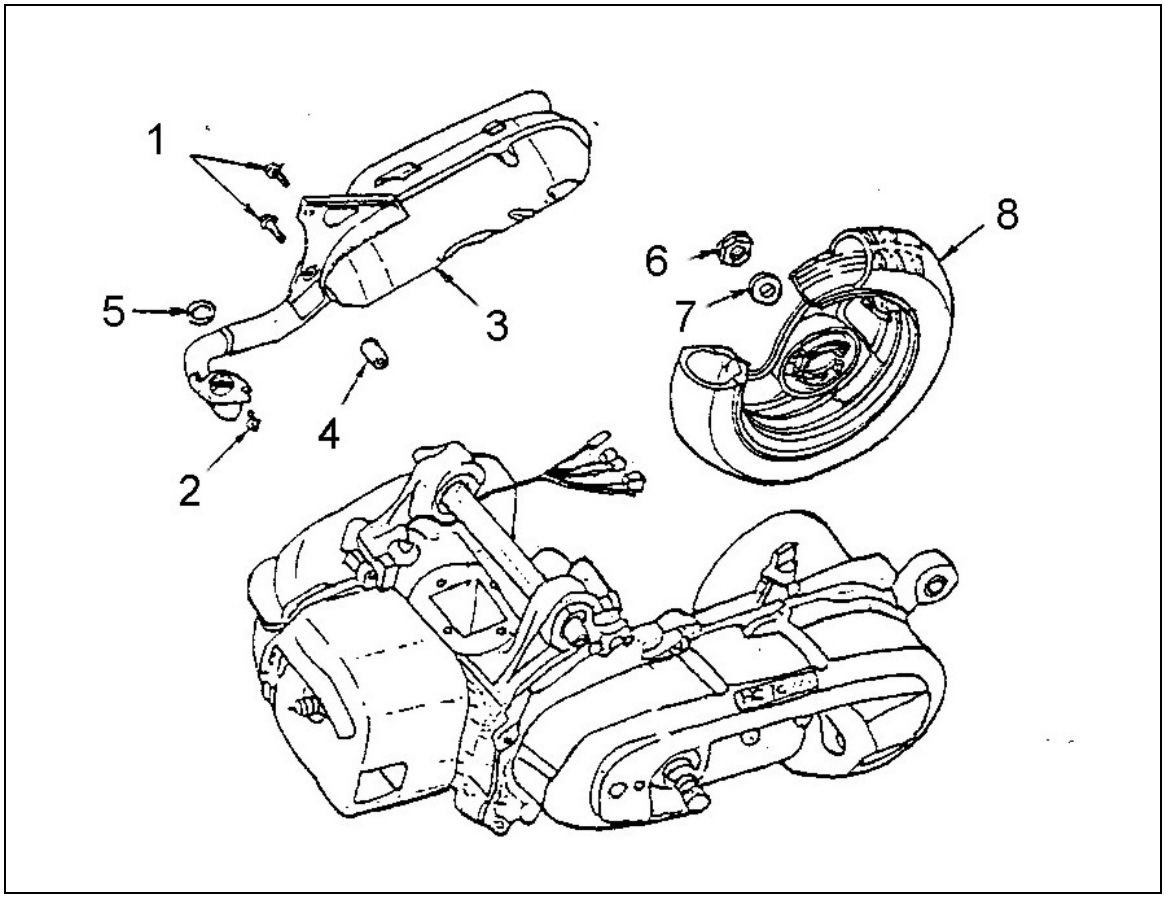

	Operation / Parts name	Q'ty	Remarks
	Disassembly		
	Muffler		
1	Hex washer face bolt	2	
2	Hex head phillips bolt	2	
3	Assembly of exhaust pipe	1	
4	Collar	1	
5	Gasket of exhaust pipe	1	
	Rear wheel		
6	Nut	1	
7	Plain washer	1	
8	Rear wheel	1	
	Assembly		• Assembling with sequence in reverse of disassembly.
	8→ 1		

Disassembly / Assembly of Rear Brake

· Disassembly of Rear Wheel.

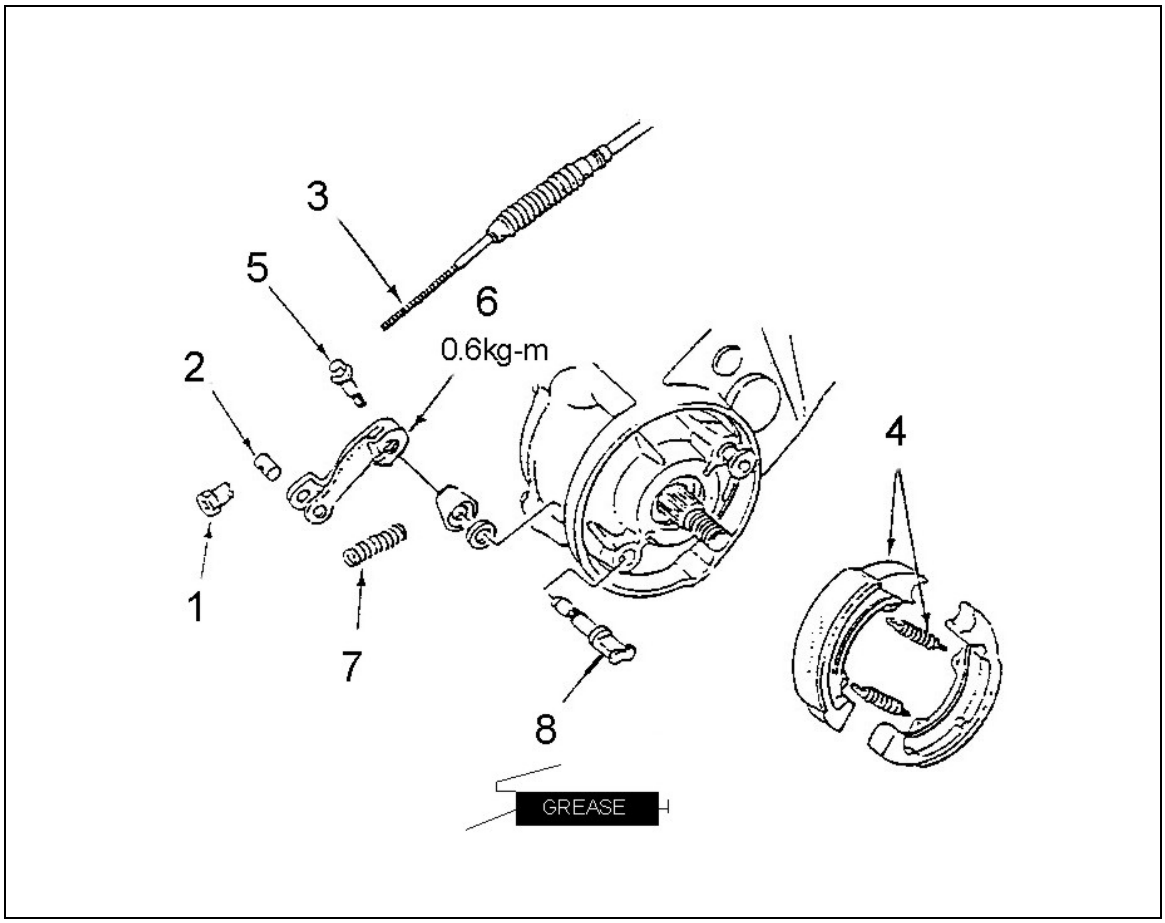

	Operation / Parts name	Q'ty	Remarks
	Disassembly		
1	Adjusted nut of rear brake	1	
2	Rear brake fixture	1	
3	Rear brake cable	1	
4	shoe/shoe strain spring of rear brake	2/2	
5	Hex washer face bolt	1	
6	Rear brake arm	1	
7	Reset spring	1	
8	Brake cam shaft	1	
	Assembly 8→ 1		• Assembly with sequence in reverse of disassembly.

Disassembly of Rear Cushion

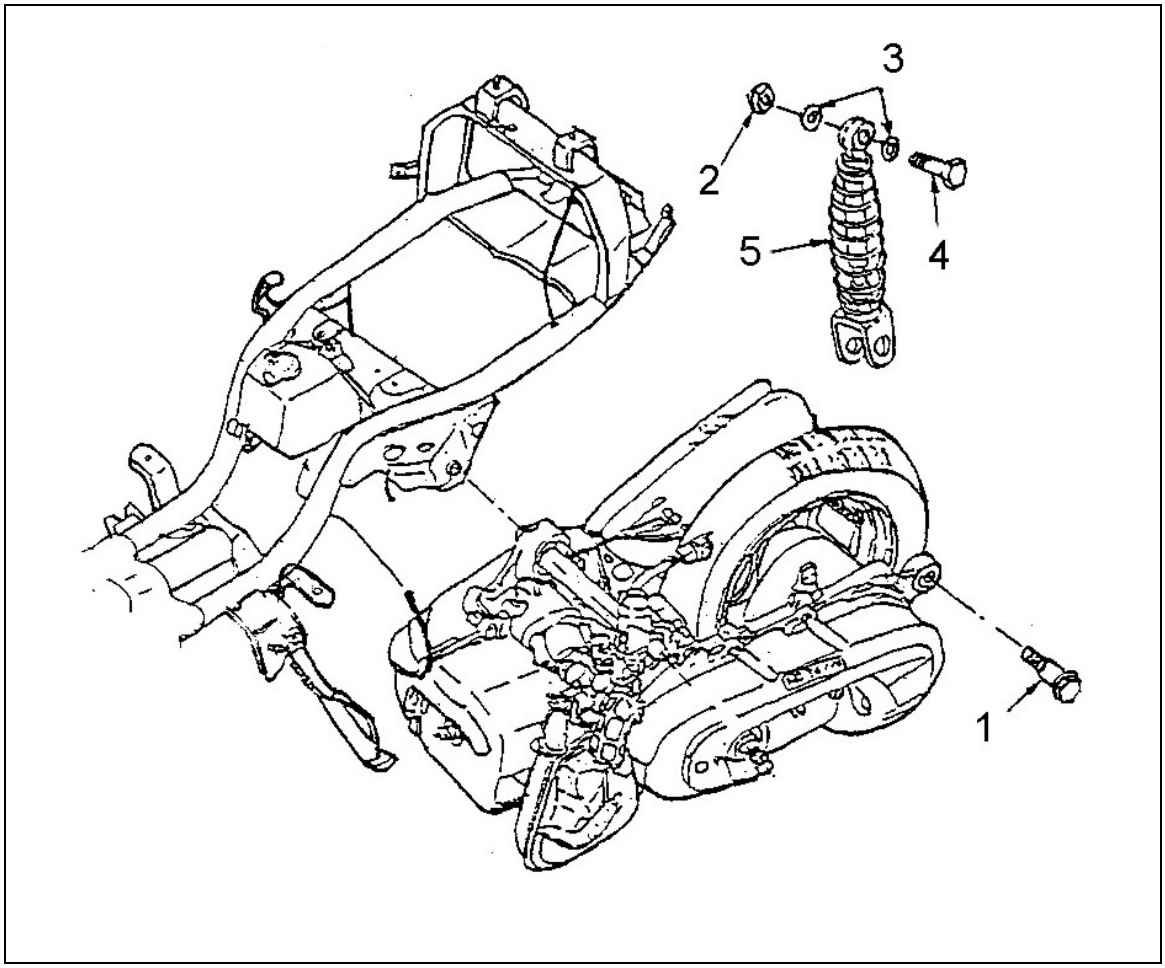

	Operation / Parts name	Q'ty	Remarks
	Disassembly		
1	Hex washer face bolt	1	
2	Nut (nylon insert)	2	
3	Plain washer	2	
4	Hex bolt	1	
5	Rear cushion	1	
	Assembly 5→ 1		• Assembly with sequence in reverse of disassembly.

ELECTRICAL DEVICE

Attention of Operation

- Remove battery from truck for charging.
- No charging with fast speed if it's not urgent necessary.
- Must check voltage with Watt-hour meter.
- Must replace the battery with tranditional battery.
- Due to it's CDI ignition device, so, no adjusting ignition time. Check CDI set & ACG if ignition time is poor. And replacing it if it's poor, confirm ignition time with original service meter.
- Disassembly start motor without disassembling the engine.

Diagnosis of Trouble

No power

- Battery discharging.
- Fallening connection wire of battery.
- Fuse broke.
- Poor main switch.

Low voltage

- Poor charging of battery.
- Poor contact.
- Poor charging system.
- Bad rectifier.

Current off and on

- Poor contact of battery wires.
- Poor contact of discharging system.
- Poor contact or short circuit of ignition system.

Light weak

- Battery discharging.
- Resistance of wiring, switch too big.

Poor changing system

- Fuse broke.
- Poor contact, broke and short circuit of connection head or socket head.
- Poor rectifier.
- Poor ACG.

Spark plug no works

- Poor contact spark plug.
- Poor contact, broke and short circuit of main wire.
  - Between ACG & C.D.I.
- Between CDI & ignition coil.
  - Between CDI & main switch.
- Bad ignition coil.
- Poor CDI set.
- Poor ACG.

High/low beams can't be changed

- Bad bulb.

· Poor lighting switch.

· Bad gage.

ELECTRICAL DEVICE

Start motor no working

· Fuse broke.
· Battery charging insufficiently.
· Bad main switch.
· Poor start switch.
· Poor front / rear brake switch.
· Poor start breaker.
· Poor contact or broke of winding.
· Poor start motor.

Powerless start motor

· Battery charging insufficiently.
· Bad contact of winding.
· Strange thing blocked in motor or gear.

Start motor return running without engine return running

· Bad small gear of start motor.
· Counter rotation of start motor.
· Battery power insufficient.

Turn on main switch, but no lighting

· Bad bulb.
· Bad switch.
· Guide wire broke.
· Fuse broke.
· Battery discharging.
· Bad wiring.

Pointer of fuel gage unstable

· Loose socket head of guide wires.
· Poor fuel gage.

RPM unsmooth

· Ignition — primary circuitry

  – Bad ignition coil.

  – Wire or poor contact.

  – Poor contact main switch.

· Ignition — secondary circuitry

  – Bad ignition coil.

  – Bad spark plug.

  – Bad high voltage wires.

  – Power leakage of spark plug.

· Ignition time

  – Bad ACG.

  – Poor installation of statue inductor.

  – Poor CDI.

Fuel direction light no working (when without fuel)

· Insufficient battery power.
· Fuse broke.
· Bad main switch.
· Bad gage.

· Bad switch of fuel height.

Flashing fuel direction light

· Loose connection head.
· Guide wires broke.
· Poor action of float.
· Poor fuel gage.

ELECTRICAL DEVICE

Solid Wiring Diagram

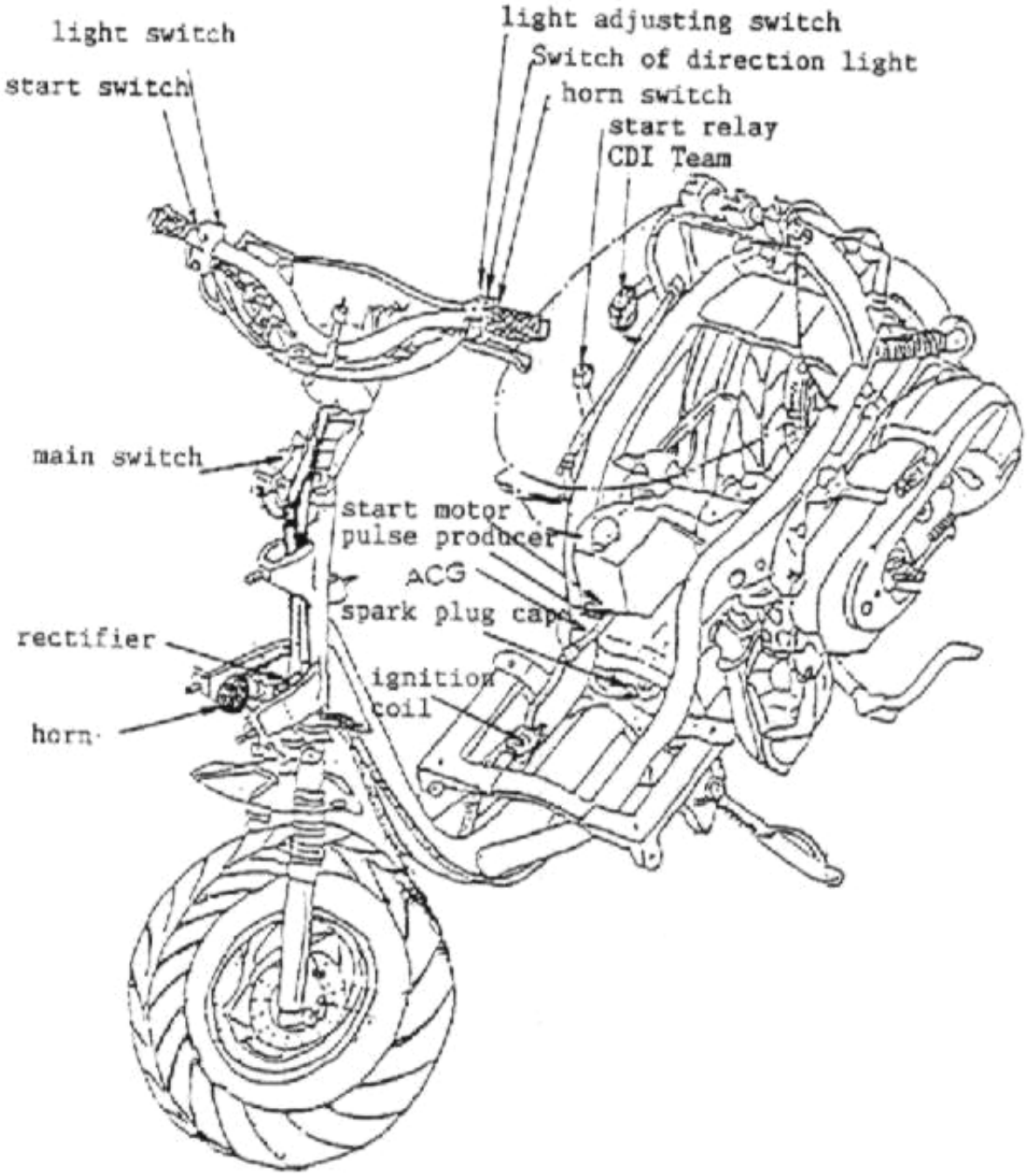
light switch
start switch
light adjusting switch
Switch of direction light
horn switch
start relay
CDI Team
main switch
start motor
pulse producer
ACG
spark plug cap
rectifier
ignition
coil
horn

ELECTRICAL DEVICE

Disassembly Of Battery

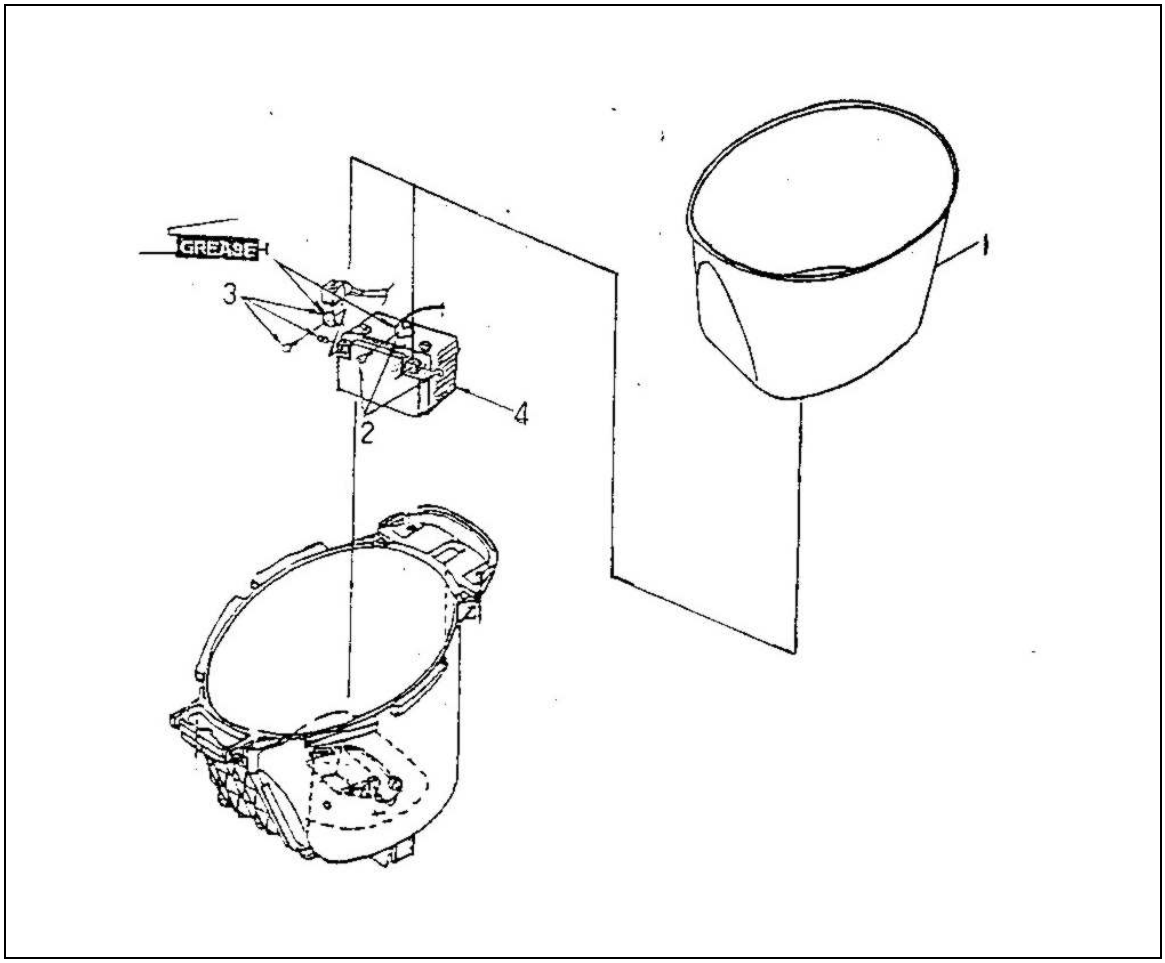

	Operation / Parts name	Q'ty	Remarks
	Disassembly		
1	Helmet box mat	1	
2	Battery – end	1	
3	Battery ⊕ end	1	✱***WARRNING:*** Disassembly battery from – end to ⊕ end.
4	Self-tapping screw	2	
5	Battery cover	1	
6	Battery	1	
2	***Assembly*** 6→ 1 Battery terminal		• Assembling with sequence in reverse of disassembly. ✱***WARRNING:*** Connect ⊕ end first , next – end ,cover ⊕ with cap.

ELECTRICAL DEVICE

Check Voltage of Battery

· Remove helmet box mat and battery cap , disassembly connection wires of battery , check voltage between battery terminals.
Charging sufficiently : over 12.8 V
Charging insufficiently : 11.5-12.8V

* ***WARNNING:***

Must check battery voltage with digital voltmeter.

Check Charging System

Power leakage test

· Disassembly ground guide wire from battery after turning "OFF " main switch, next, connect voltmeter to the end between terminal (–) & ground guide wires.
· Check voltage when main switch is "OFF ".

* ***WARNNING:***

- Check voltage according to sequence from big to small.
- Voltmeter's fuse will be broke when check voltage over the under limitation choosed.
- No turn "ON" main switch when check current.

Current Leakage : under 1 mA

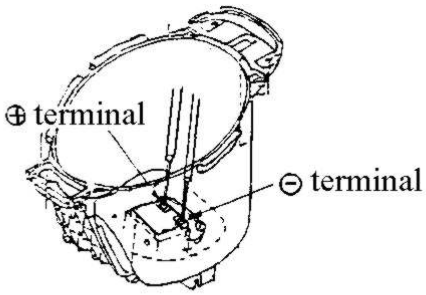

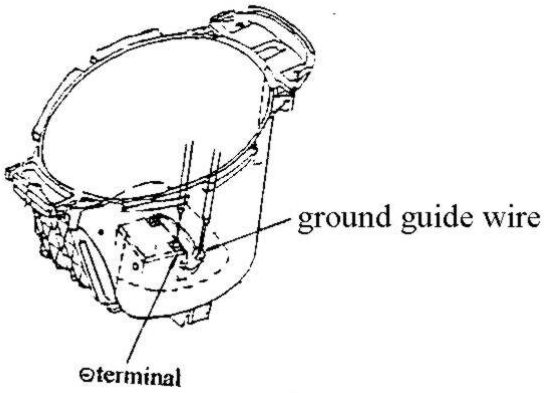

ELECTRICAL DEVICE

Check Charging Status

** WARNNING:*

- Voltage will have big change following the charging status of battery in this check, so, must check with charging completely, over 12.8 V.
- There will produce big current due to start-will consume the power in battery.

· Assembly voltmeter to terminal of main fuse, start engine, open light, rise running amount, and check charging voltage & current.

Charging current : 1~2 Amp/5000rpm

Voltage of charging control: 14~15V/5000rpm

Check head light which wires connecting.

· Start engine, turn "ON" light switch, open high beam.

· Check voltage between green (+) & black (-) guide wires.

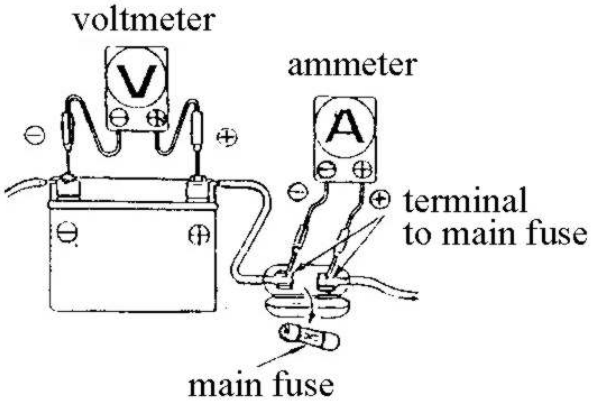

Check Voltage of Front Lighting Control

· Disassembly front covering of handle.

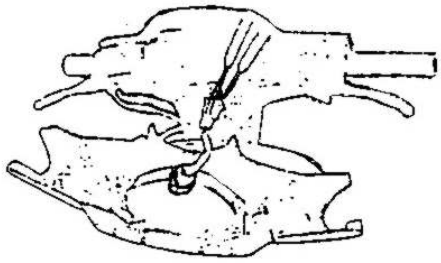

** WARNNING:*

ELECTRICAL DEVICE

✱***WARNNING:*** Check in range of AC.

· Check voltage adjuster when voltage Is not in the range controlling.

Control voltage: 12~14V/5000rpm

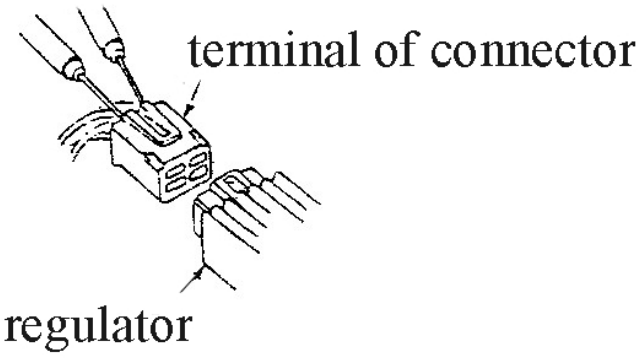

Check Voltage Adjuster

· Check voltage adjuster.

· Disassembly connection head of voltage adjuster.

· Check return of wiring edge connection head.

Disassembly of ACG

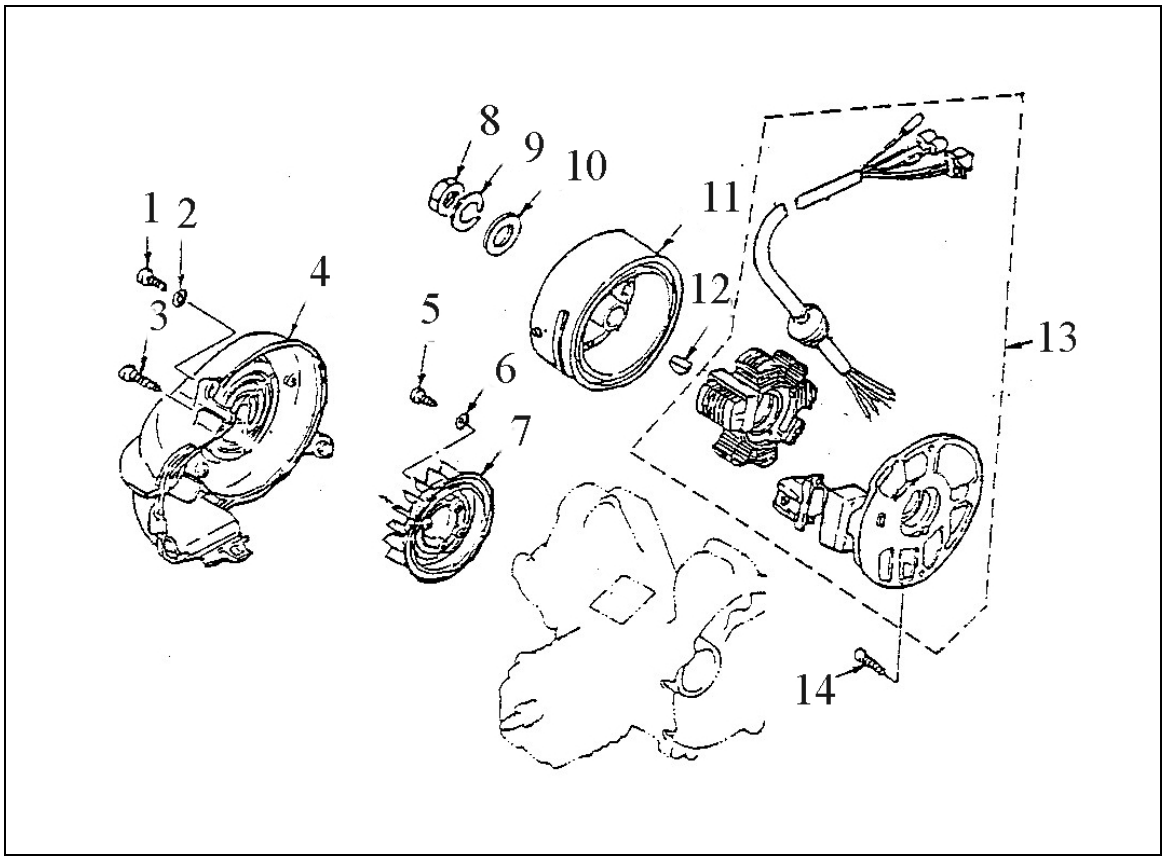

ELECTRICAL DEVICE

	Operation / Parts name	Q'ty	Remarks
	Disassembly		
1	Hexagon socket bolt	2	
2	Plain washer	2	
3	Self-tapping screw	1	
4	Cap of electric disc	1	
5	Hexagon socket bolt	4	
6	Plain washer	1	
7	Fan	1	
8	Hexagon nut	1	
9	Spring washer	2	
10	Plain washer	1	
11	Fly wheel of generator	2	
12	Semi-cycle of electric disc	1	***✱WARRNING:***
13	Whole body bolt	1	Take the good care, no hurt coil.
14	Hexagon socket bolt	1	
	Assembly 14→ 1		· Assembling with sequence in reverse of disassembly.

ACG (Charging Coil) Check

✱WARNNING:

Checking in the engine connected With start motor.

· Disassembly ACG connection.

· Check resistance of charging wire & lighting wire.

· Standard valve (20℃)

Charging wire : 0.2~1.0

Lighting wire: 0.1~0.8

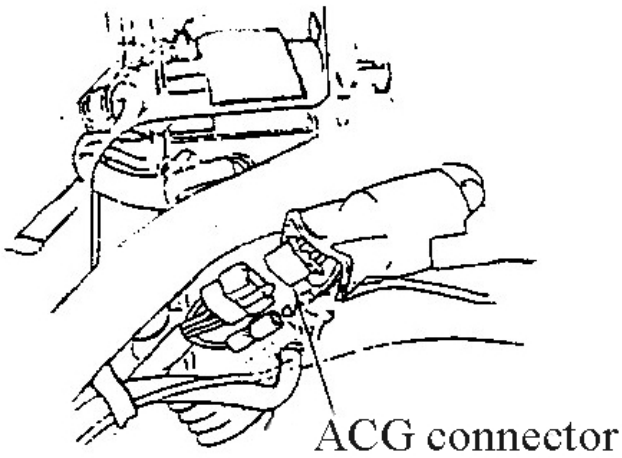

ELECTRICAL DEVICE

Ignition Coil

Disassembly

· Disassembly spark plug cap.
· Separating cable, disassembling installed bolt, then, disassembly ignition coil.

Assembly

· Assembly with sequence in reverse of disassembly.

✱***WARNNING:***

Guide wire must be installed in the right place.

Conduction Test

· Check once coil resistance of ignition terminal.

Standard valve (20℃): 0.3~0.5Ω

✱***WARNNING:***

Check ignition status with performance tester due to this test has its own stanard.

· Check twice coil resistance between spark plug cap & (-) terminal.

Standard valve : 9.5~11 kΩ

(spark plug cap in team)

· Remove spark plug cap from high Voltage coil.

· Check twice coil resistance between. high voltage & (-) terminal.

Standard valve : 5~7 kΩ

(without spark plug cap)

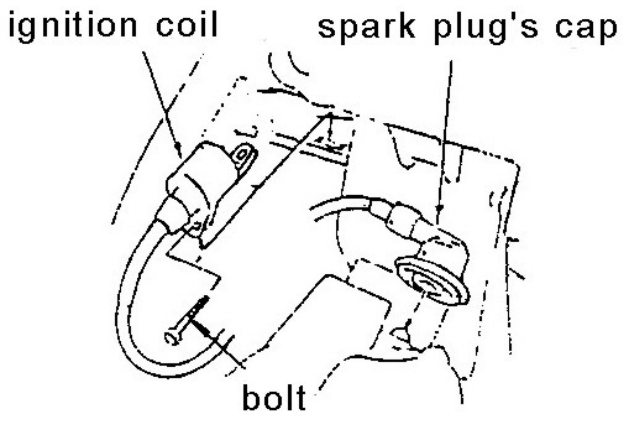
ignition coil
spark plug's cap
bolt

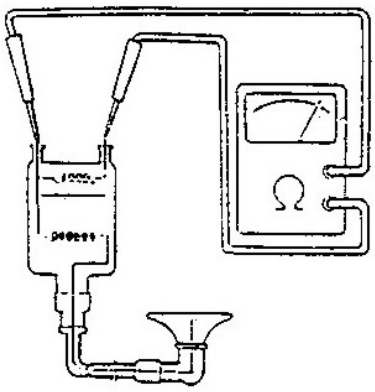

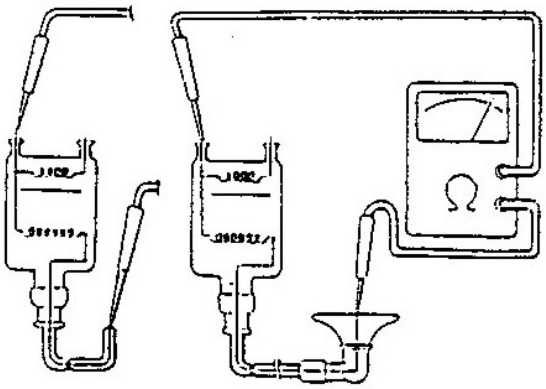

Assembly / Separation of Starting Motor

· Disassembly of starting motor.

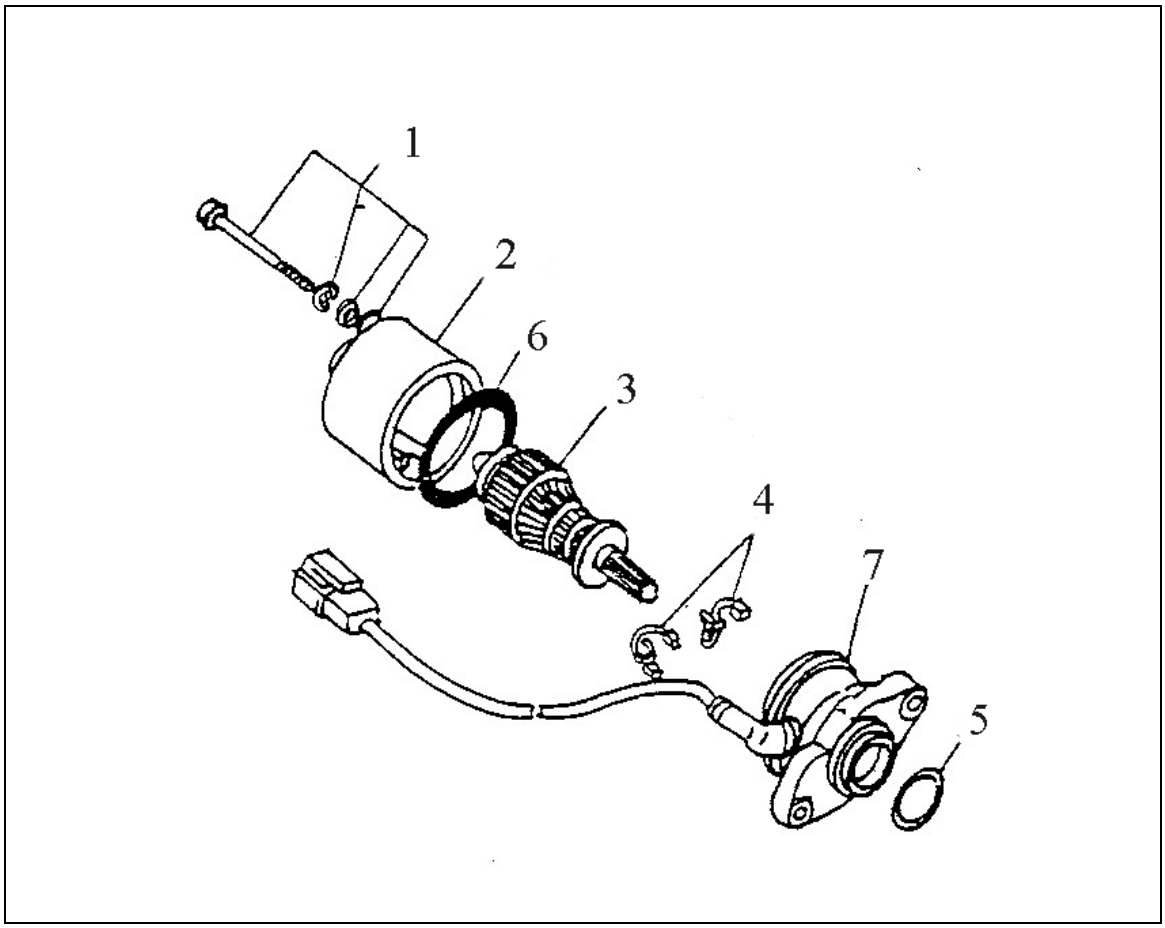

	Operation / Parts name	Q'ty	Remarks
	Separation		
1	Bolt set	2	
2	Casing	1	
3	Armature rotor	1	
4	Carbon brash	2	
5	Oil ring	1	
6	Oil ring	1	
7	Front fixed seat	1	
	Assembly 7→ 1		· Assembling with sequence in reverse of disassembly.

ELECTRICAL DEVICE

Check Fuel Gage

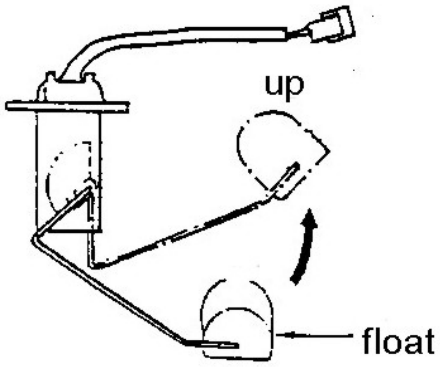

- Remove fuel gage.
- Put the float to up end down end to check the resistance between each terminal.

Terminal of Guide wire	Up end of float	Down end of float
Green & black	0~20Ω	90~110Ω

Check Main Switch

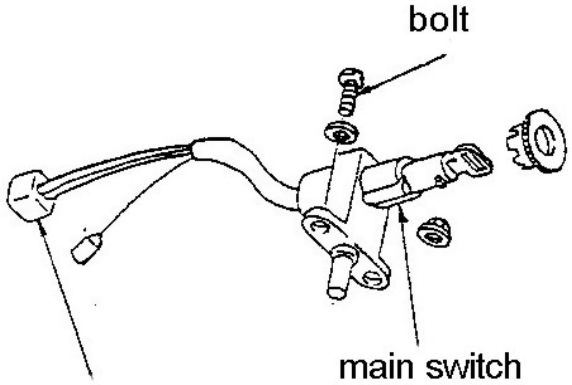

connection head of main switch

- Remove connection of main switch guide wire, check conductivity between each terminal.

Color	tea	black/ red	black	red
LOCK		○	○	
OFF		○	○	
ON	○			○

Exchange

- Remove front covering.
- Remove 2 bolts, disassembly main switch.
- Installing with the sequence in reverse of disassembly.

Check switch of handle

- Remove front covering.
- Disassembly connection of handle switch, check conductivity between each terminal.

ELECTRICAL DEVICE

Switch of Lights

Color	Yellow/red	Blue
OFF		
ON	○ ———	——— ○

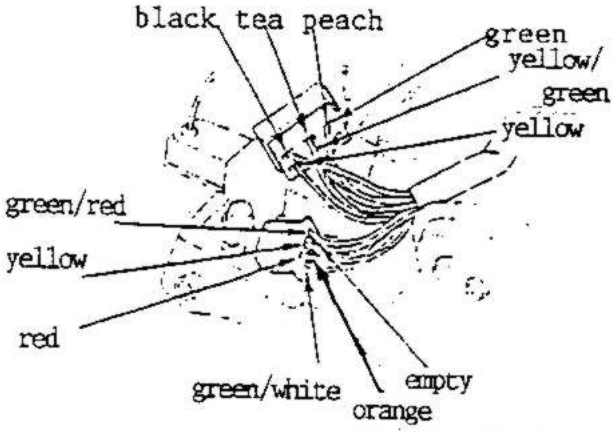

Power Switch

Color	blue/white	Black
Up		
Down	○ ———	——— ○

Exchange of Bulbs

Head light bulb

· Remove front covering of handle press down the connection and turn it to change head light bulb.

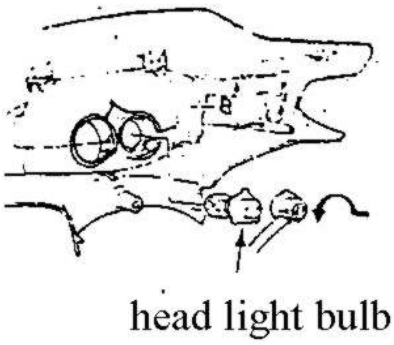

Dash light

· Remove rear covering of handle pull out the connection of bulb, and replace the bulb.

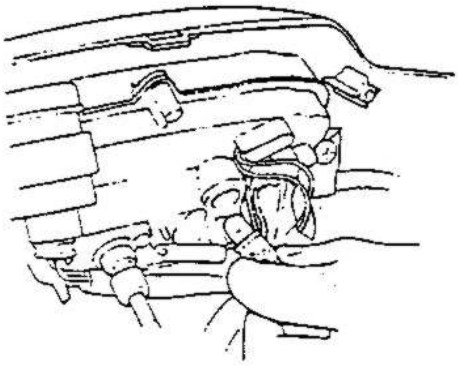

ELECTRICAL DEVICE

Rear light / Brake light / Rear direction light bulb

· Remove 2 screws, pull out the light Covering to front, disassembly hook on light / brake light covering, and disassembly light covering of direction light and bulb, finally change bulb.

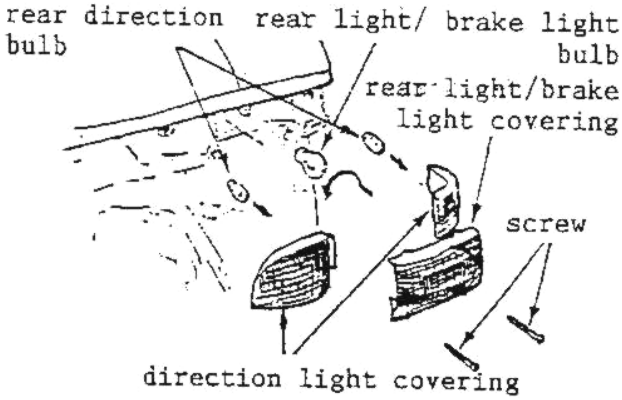

MENO
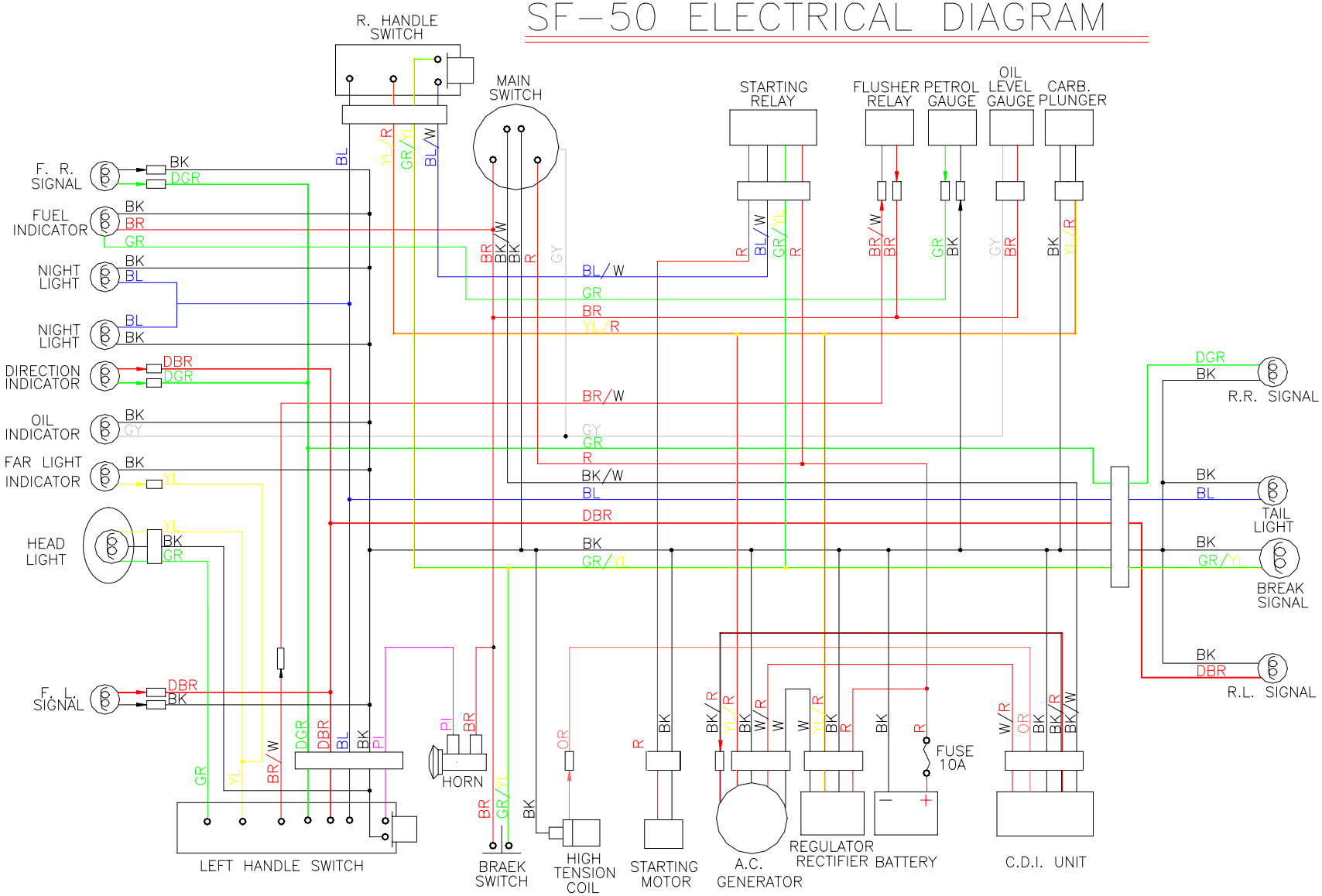
SF-50 ELECTRICAL DIAGRAM